VOLKSWAGEN VANAGON

Official Factory Repair Manual

1980, 1981, 1982, 1983, 1984, 1985,
1986, 1987, 1988, 1989, 1990, 1991

Including Diesel, Syncro and Camper

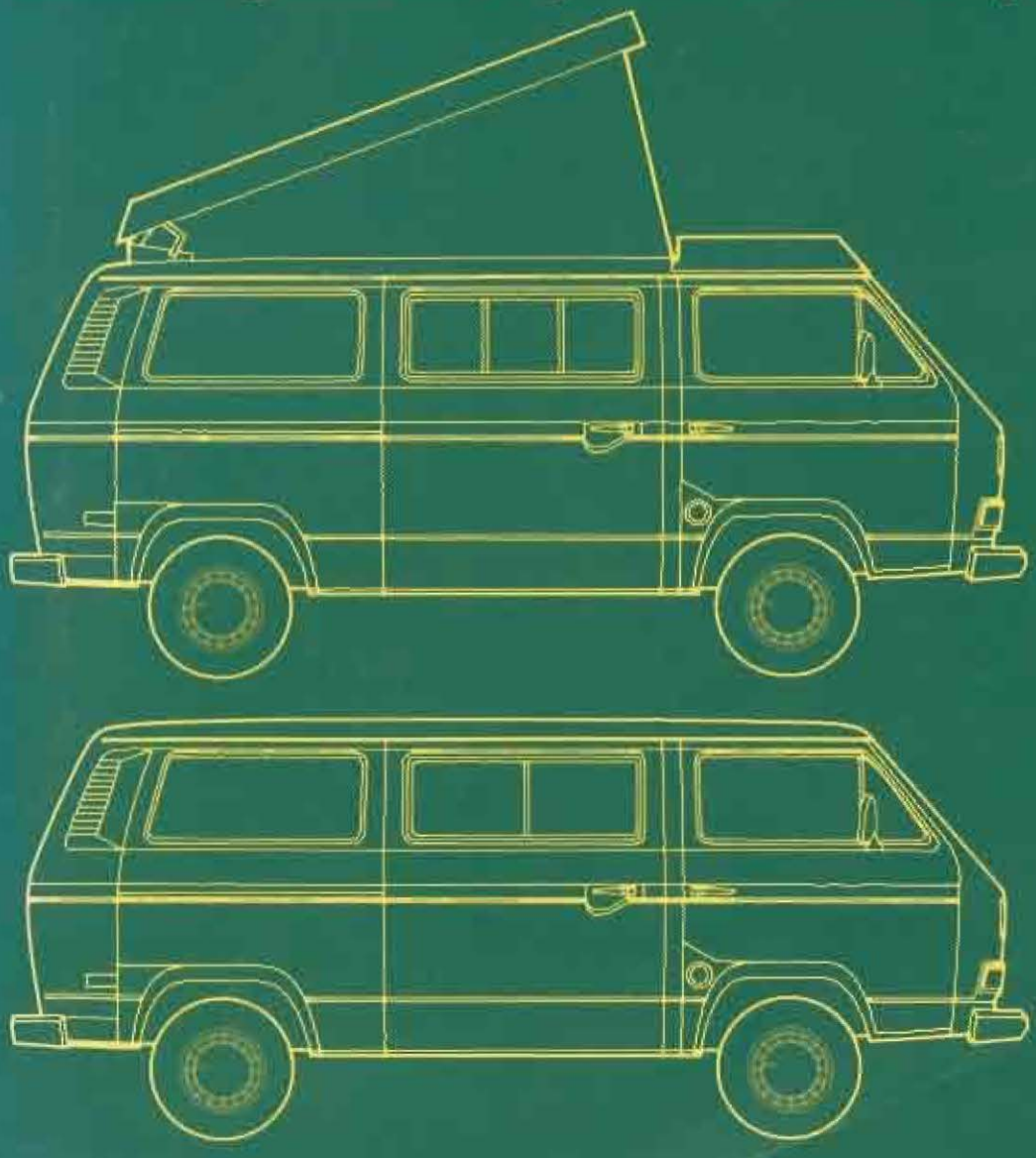

Robert Bentley



Volkswagen Vanagon

Official Factory Repair Manual

1980, 1981, 1982, 1983, 1984, 1985, 1986, 1987, 1988, 1989, 1990, 1991

Including Diesel, Syncro and Camper

Robert Bentley
Cambridge, Massachusetts

ROBERT BENTLEY, INC. | AUTOMOTIVE PUBLISHERS

Information that makes the difference.®

1734 Massachusetts Avenue
Cambridge, MA 02138 USA
800-423-4595 / 617-547-4170
http://www.rb.com
e-mail: sales@rb.com

WARNING—Important Safety Notice

Do not use this manual unless you are familiar with basic automotive repair procedures and safe workshop practices. This manual illustrates the workshop procedures required for most service work; it is not a substitute for full and up-to-date information from the vehicle manufacturer or for proper training as an automotive technician. Note that it is not possible for us to anticipate all of the ways or conditions under which vehicles may be serviced or to provide cautions as to all of the possible hazards that may result.

The vehicle manufacturer will continue to issue service information updates and parts retrofits after the editorial closing of this manual. Some of these updates and retrofits will apply to procedures and specifications in this manual. We regret that we cannot supply updates to purchasers of this manual.

We have endeavored to ensure the accuracy of the information in this manual. Please note, however, that considering the vast quantity and the complexity of the service information involved, we cannot warrant the accuracy or completeness of the information contained in this manual.

FOR THESE REASONS, NEITHER THE PUBLISHER NOR THE AUTHOR MAKES ANY WARRANTIES, EXPRESS OR IMPLIED, THAT THE INFORMATION IN THIS BOOK IS FREE OF ERRORS OR OMISSIONS AND WE EXPRESSLY DISCLAIM THE IMPLIED WARRANTIES OF MERCHANTABILITY AND OF FITNESS FOR A PARTICULAR PURPOSE, EVEN IF THE PUBLISHER OR AUTHOR HAVE BEEN ADVISED OF A PARTICULAR PURPOSE, AND EVEN IF A PARTICULAR PURPOSE IS INDICATED IN THE MANUAL. THE PUBLISHER AND AUTHOR ALSO DISCLAIM ALL LIABILITY FOR DIRECT, INDIRECT, INCIDENTAL OR CONSEQUENTIAL DAMAGES WHICH RESULT FROM ANY USE OF THE EXAMPLES, INSTRUCTIONS OR OTHER INFORMATION IN THIS BOOK. IN NO EVENT SHALL OUR LIABILITY WHETHER IN TORT, CONTRACT OR OTHERWISE EXCEED THE COST OF THIS MANUAL.

Your common sense and good judgment are crucial to safe and successful service work. Read procedures through before starting them. Think about whether the condition of your car, your level of mechanical skill, or your level or reading comprehension might result in or contribute in some way to an occurrence which might cause you injury, damage your car, or result in an unsafe repair. If you have doubts for these or other reasons about your ability to perform safe repair work on your car, have the work done at an authorized Volkswagen dealer or other qualified shop.

Part numbers listed in this manual are for identification purposes only, not for ordering. Always check with your authorized Volkswagen dealer to verify part numbers and availability before beginning service work that may require new parts.

Before attempting any work on your Volkswagen, read the warnings and cautions on pages ix and x and any warning or caution that accompanies a procedure in the service manual. Review the warnings and cautions on pages ix and x each time you prepare to work on your Volkswagen.

Special tools required to perform certain service operations are identified in the manual and are recommended for use. Use of tools other than those recommended in this service manual may be detrimental to the car's safe operation as well as the safety of the person servicing the car.

Copies of this manual may be purchased from authorized Volkswagen dealers, most automotive accessories and parts dealers specializing in Volkswagens, from selected booksellers, or directly from the publisher by mail.

The publisher encourages comments from the reader of this manual. These communications have been and will be carefully considered in the preparation of this and other manuals. Please write to Robert Bentley, Inc. at the address listed on the top of this page.

Library of Congress Catalog Card No. 91-74020
ISBN 0-8376-0336-6
VWoA Part No. LPV 800 148
VWC Inc. Part No. MAN 101 251F
Bentley Stock No. VV91

01 00 99 98 10 9 8 7

The paper used in this publication is acid free and meets the requirements of the National Standard for Information Sciences-Permanence of Paper for Printed Library Materials. (∞)

© Copyright 1991 Volkswagen United States, Inc.

Editorial closing July 15, 1991

All rights reserved. All information contained in this manual is based on the information available to the publisher at the time of editorial closing. The right is reserved to make changes at any time without notice. No part of this publication may be reproduced, stored in a retrieval system, or transmitted in any form or by any means, electronic, mechanical, photocopying, recording, or otherwise, without the prior written consent of the publisher. This includes text, figures, and tables. All rights reserved under Berne and Pan-American Copyright conventions.

Manufactured in the United States of America

Foreword viii
Warnings and Cautions ..... ix, x

General

Type/Model Identification ..... page 2
VIN, Engine No. ..... page 2
Transmission No., manual ..... page 3
Transmission No., automatic ..... page 4
Lifting car with floor jack/hoist ..... page 6
Towing Car ..... page 5

Repair Groups

Engine

Engine—Assembly 10
Crankshaft/Crankcase 13
Cylinder Heads/Valve Drive 15
Lubrication System 17
Cooling System 19
Fuel Supply 20
Fuel Injection—Diesel System 23
Fuel Injection—AFC System 24
Fuel Injection—Water-cooled 24
Exhaust System/Emission Controls 26
Electrical—Battery, Starter, Alternator 27
Ignition System 28

Clutch Transmission

Clutch, Controls 30
Torque Converter 32
Manual Transmission—Controls, Assembly 34
Case, Gears, Shafts 35
Automatic Transmission—Controls, Assembly 37
Case, Gears, Shafts 38
Differential 39

Suspension Brakes Steering

Front Wheel Suspension—Shafts and Axle 40
Rear Wheel Suspension—Shafts and Axle 42
Wheels, Tires, Wheel Alignment 44
Brakes—Mechanical Components 46
Hydraulic Components, Regulator, Booster 47
Steering 48

Body Heater

Body Dimensions 50
Hoods/Lids 55
Doors—Front 57
Rear, Sliding 58
Sunroof 60
Tarpaulin 61
Bumpers 63
Glass, Window Regulators 64
Body Accessories, Exterior 66
Seat Belt System 68
Trim—Interior 70
Seats 72
Body—Seat Upholstery 74
Camper—Interior Panels, Roof 75
Cabinets, Water Tank, Refrigerator 76
Seats, Beds 77
Heater/Ventilation 80
Heater Booster 82
Air Conditioner 87

Electrical

Instruments, Radio 90
Windshield Wiper and Washer 92
Lights—Exterior 94
Wiring 97

Appendix

Vehicle Care 1
Do-it-yourself Service 20
Technical Data 26
Maintenance Tables 28

Foreword

Service to Volkswagen owners is a top priority of Volkswagen organization and has always included the continuing development and introduction of new and expanded services. In line with this purpose, Volkswagen United States, Inc. has introduced this Volkswagen Official Factory Repair Manual.

This Vanagon manual covers the model years 1980 through 1991 including Air-cooled and Water-cooled Gasoline Engines, Diesel Engine, Syncro and Camper. This manual was specifically written to cover U.S. and Canada models only.

For the Volkswagen owner with basic mechanical skills and for independent garages, this manual gives all the specifications and procedures that were available in an authorized Volkswagen service department as this manual went to press. In addition, the Volkswagen owner who has no intention of working on his or her vehicle may find that reading and owning this manual will make it possible to be better informed and to discuss repairs more intelligently with a professional automotive technician.

This manual has been prepared from the repair information that the Volkswagen organization provides to its own factory-trained technicians and has been developed primarily with the professional automotive technician in mind. The aim throughout has been clarity and completeness with step-by-step procedures and accurate specifications.

The Volkswagen owner intending to do maintenance and repair should have a set of metric wrenches and sockets, a torque wrench, screwdrivers, and feeler gauges, since these basic hand tools will be used for a majority of the repairs described in this manual. Usually, the text will note when a repair requires special tools.

This manual is organized so that, whenever possible, when a change has been made within a model year, the vehicle identification number (VIN) of the first vehicle with this change is given. The digits you need to know for this parts and service information are taken from the seventeen digit VIN number. If, for example the VIN is WVWZZZ24ZBH000001, you will need only nine of the last eleven digits of this number—or, more specifically, the digits 24 B 000001. Your Volkswagen's VIN is found on the left doorjamb and on a plate mount-

ed on the driver's side of the instrument panel padding where the number can be seen through the windshield. The VINs assigned to Vanagon models for the years 1980 through 1991 which are covered by this manual are:

1980:	_____25_A_000001	to	_____25_A_999999
1981:	_____25_B_000001	to	_____25_B_999999
1982:	_____25_C_000001	to	_____25_C_999999
1983:	_____25_D_000001	to	_____25_D_999999
1984:	_____25_E_000001	to	_____25_E_999999
1985:	_____24_F_000001	to	_____24_F_999999
	_____25_F_000001	to	_____25_F_999999
1986:	_____24_G_000001	to	_____24_G_999999
	_____25_G_000001	to	_____25_G_999999
1987:	_____24_H_000001	to	_____24_H_999999
	_____25_H_000001	to	_____25_H_999999
1988:	_____24_J_000001	to	_____24_J_999999
	_____25_J_000001	to	_____25_J_999999
1989:	_____24_K_000001	to	_____24_K_999999
	_____25_K_000001	to	_____25_K_999999
1990:	_____24_L_000001	to	_____24_L_999999
	_____25_L_000001	to	_____25_L_999999
1991:	_____24_M_000001	to	_____24_M_999999
	_____25_M_000001	to	_____25_M_999999

We have endeavored to ensure the highest degree of accuracy possible. When the vast array of data presented in this manual is taken into account, however, no claim to infallibility can be made. We therefore cannot be responsible for the result of any errors that may have crept into the text. The Publisher encourages comments from the readers of this manual in regard to any errors and, also, suggestions for improvement in the presentation of the technical material. These communications have been and will be carefully considered in the preparation of this and other manuals. Please write to Robert Bentley, Inc., Cambridge, Massachusetts 02138.

Volkswagen offers extensive warranties, especially on components of the fuel delivery and emission control systems. Therefore, before deciding to repair a Volkswagen that may still be covered wholly or in part by any warranties issued by Volkswagen United States, Inc., consult your authorized Volkswagen dealer. You may find that he can make the repair either free or at minimum cost. Regardless of its age, or whether it is under warranty, your Volkswagen is both an easy vehicle to service and an easy vehicle to get serviced. So if at any time a repair is needed that you feel is too difficult to do yourself, a trained Volkswagen technician is ready to do the job for you.

Robert Bentley

Please read these warnings and cautions before proceeding with maintenance and repair work.

WARNING—

- Some repairs may be beyond your capability. If you lack the skills, tools and equipment, or a suitable workplace for any procedure described in this manual, we suggest you leave such repairs to an authorized Volkswagen dealer service department, or other qualified shop.

- Volkswagen is constantly improving its cars. Sometimes these changes, both in parts and specifications, are made applicable to earlier models. Therefore, before starting any major jobs or repairs to components on which passenger safety may depend, consult your authorized Volkswagen dealer about Technical Bulletins that may have been issued since the editorial closing of this manual.

- Do not re-use any fasteners that are worn or deformed in normal use. Many fasteners are designed to be used only once and become unreliable and may fail when used a second time. This includes, but is not limited to, nuts, bolts, washers, self-locking nuts or bolts, circlips and cotter pins. Always replace these fasteners with new parts.

- Never work under a lifted car unless it is solidly supported on stands designed for the purpose. Do not support a car on cinder blocks, hollow tiles or other props that may crumble under continuous load. Never work under a car that is supported solely by a jack. Never work under the car while the engine is running.

- If you are going to work under a car on the ground, make sure that the ground is level. Block the wheels to keep the car from rolling. Disconnect the battery negative (–) terminal (Ground strap) to prevent others from starting the car while you are under it.

- Never run the engine unless the work area is well ventilated. Carbon monoxide kills.

- Finger rings, bracelets and other jewelry should be removed so that they cannot cause electrical shorts, get caught in running machinery, or be crushed by heavy parts.

- Tie long hair behind your head. Do not wear a necktie, a scarf, loose clothing, or a necklace when you work near machine tools or running engines. If your hair, clothing, or jewelry were to get caught in the machinery, severe injury could result.

- Do not attempt to work on your car if you do not feel well. You increase the danger of injury to yourself and others if you are tired, upset or have taken medication or any other substance that may keep you from being fully alert.

- Illuminate your work area adequately but safely. Use a portable safety light for working inside or under the car. Make sure the bulb is enclosed by a wire cage. The hot filament of an accidentally broken bulb can ignite spilled fuel or oil.

- Catch draining fuel, oil, or brake fluid in suitable containers. Do not use food or beverage containers that might mislead someone into drinking from them. Store flammable fluids away from fire hazards. Wipe up spills at once, but do not store the oily rags, which can ignite and burn spontaneously.

- Always observe good workshop practices. Wear goggles when you operate machine tools or work with battery acid. Gloves or other protective clothing should be worn whenever the job requires working with harmful substances.

- Friction materials such as brake or clutch discs may contain asbestos fibers. Do not create dust by grinding, sanding, or by cleaning with compressed air. Avoid breathing asbestos fibers and asbestos dust. Breathing asbestos can cause serious diseases such as asbestosis or cancer, and may result in death.

- Disconnect the battery negative (–) terminal (Ground strap) whenever you work on the fuel system or the electrical system. Do not smoke or work near heaters or other fire hazards. Keep an approved fire extinguisher handy.

- Batteries give off explosive hydrogen gas during charging. Keep sparks, lighted matches and open flame away from the top of the battery. If hydrogen gas escaping from the cap vents is ignited, it will ignite gas trapped in the cells and cause the battery to explode.

- Connect and disconnect battery cables, jumper cables or a battery charger only with the ignition switched off, to prevent sparks. Do not disconnect the battery while the engine is running.

- Do not quick-charge the battery (for boost starting) for longer than one minute. Wait at least one minute before boosting the battery a second time.

- Do not allow battery charging voltage to exceed 16.5volts. If the battery begins producing gas or boiling violently, reduce the charging rate. Boosting a sulfated battery at a high charging rate can cause an explosion.

- The air-conditioning system is filled with chemical refrigerant, which is hazardous. The A/C system should be serviced only by trained technicians using approved refrigerant recovery/recycling equipment, trained in related safety precautions, and familiar with regulations governing the discharging and disposal of automotive chemical refrigerants.

- Do not expose any part of the A/C system to high temperatures such as open flame. Excessive heat will increase system pressure and may cause the system to burst.

- Some aerosol tire inflators are highly flammable. Be extremely cautious when repairing a tire that may have been inflated using an aerosol tire inflator. Keep sparks, open flame or other sources of ignition away from the tire repair area. Inflate and deflate the tire at least four times before breaking the bead from the rim. Completely remove the tire from the rim before attempting any repair.

- Some cars covered by this manual are equipped with a supplemental restraint system (SRS), that automatically deploys an airbag in the event of a frontal impact. The airbag is inflated by an explosive device. Handled improperly or without adequate safeguards, it can be accidently activated and cause serious injury.

- Greases, lubricants and other automotive chemicals contain toxic substances, many of which are absorbed directly through the skin. Read manufacturer's instructions and warnings carefully. Use hand and eye protection. Avoid direct skin contact.

continued on next page

Please read these warnings and cautions before proceeding with maintenance and repair work.

CAUTION—

- If you lack the skills, tools and equipment, or a suitable workshop for any procedure described in this manual, we suggest you leave such repairs to an authorized Volkswagen dealer or other qualified shop.

- Volkswagen offers extensive warranties, especially on components of fuel delivery and emission control systems. Therefore, before deciding to repair a Volkswagen that may still be covered wholly or in part by any warranties issued by Volkswagen United States, Inc., consult your authorized Volkswagen dealer. You may find that he can make the repair for free, or at minimal cost.

- Volkswagen part numbers listed in this manual are for identification purposes only, not for ordering. Always check with your authorized Volkswagen dealer to verify part numbers and availability before beginning service work that may require new parts.

- Before starting a job, make certain that you have all the necessary tools and parts on hand. Read all the instructions thoroughly, do not attempt shortcuts. Use tools appropriate to the work and use only replacement parts meeting Volkswagen specifications. Makeshift tools, parts and procedures will not make good repairs.

- Use pneumatic and electric tools only to loosen threaded parts and fasteners. Never use these tools to tighten fasteners, especially on light alloy parts. Always use a torque wrench to tighten fasteners to the tightening torque specification listed.

- Be mindful of the environment and ecology. Before you drain the crankcase, find out the proper way to dispose of the oil. Do not pour oil onto the ground, down a drain, or into a stream, pond or lake. Consult local ordinances that govern the disposal of wastes.

- On cars equipped with anti-theft radios, make sure you know the correct radio activation code before disconnecting the battery or removing the radio. If the wrong code is entered into the radio when power is restored, that radio may lock up and be rendered inoperable, even if the correct code is then entered.

- Connect and disconnect a battery charger only with the battery charger switched off.

- Do not quick-charge the battery (for boost starting) for longer than one minute. Wait at least one minute before boosting the battery a second time.

- Sealed or "maintenance free" batteries should be slow-charged only, at an amperage rate that is approximately 10% of the battery's ampere-hour (Ah) rating.

- Do not allow battery charging voltage to exceed 16.5 volts. If the battery begins producing gas or boiling violently, reduce the charging rate. Boosting a sulfated battery at a high charging rate can cause an explosion.

WARNING —

- *Automotive service and repair is serious business. You must be alert, use common sense, and exercise good judgement to prevent personal injury and complete the work safely.*
- *Before beginning any work on your Volkswagen, thoroughly read all the Cautions and Warnings listed near the front of this manual.*
- *Always read the complete procedure before you begin the work. Pay special attention to any Cautions and Warnings that accompany that procedure, or other information on a specific topic.*

Air Conditioner
— Adapter valve VAG 1637
installing 87.15
— Air distribution system
components 87.9
— Component locations 87.2
— Compressor (Sanden SD510)
replacing 87.16
— Evaporator
removing/installing 87.14
— Evaporator housing
disassembling/assembling 87.12
removing 87.10
— Expansion valve
removing/installing 87.14
— Fuses, locations 87.4
— Refrigerant system
capacity 87.7
cautions and warnings 87.7
controls 87.6
discharging 87.8
— Relays, locations 87.5

Alignment
— *See Wheels*

Alternator
— Alternator/Regulator
checking 27.18
— Heater blower fan
removing/replacing 27.22
— Indicator light, troubleshooting 27.23
— Mount, adjusting 27.22
— Removing/Installing 27.15
— Repairing
45A, 65A 27.16
90A 27.17
— System layout 27.19
— V-belt
adjusting 27.21
replacing 27.21
— Voltage regulator 27.20

Battery
— Charging 27.5
— Checking 27.4

Battery (Cont'd)
— Electrolyte level 27.4
— Filler caps 27.7
— Location(s) 27.8
— Nomenclature 27.2
— Safety precautions 27.4
— Troubleshooting 27.10

Body
— Acid rain, removing spots 50.6
— Adhesives materials 50.5
— Body Dimensions
door 50.4
floor 50.2
windshield 50.4
— Painting
pop-up roof/luggage carrier 50.5
— Plastics, identifying 50.5
repairing 50.5

Brakes—Hydraulic Components, Regulator, Booster
— Brake booster assembly 47.10
checking 47.10
— Brake caliper
Girling (1980-1985) assembly 47.5
Girling/Teves (1980-1985)
disassembling/assembling 47.6
Girling/Teves (from 1986)
assembly 47.7a
Teves (1980-1985) assembly 47.4
Teves (1980-1985), noise
dampening plates 47.7
— Brake fluid, changing
with US 1116 47.8
without US 1116 47.8a
— Brake hydraulic system
general repair notes 47.8
— Brake master cylinder
assembly 47.2
— Brake pressure regulator
checking 47.8a
— Brake system, bleeding
with US 1116 47.8
without US 1116 47.8a
— Check valve
checking 47.10
— Rear wheel cylinder assembly 47.8

Brakes—Mechanical Components
— Brake pedal/linkage
assembly 46.10
— Front brake
assembly (1980-1985) 46.2
assembly (from 1986 m.y.) 46.5
pads (1980-1985)
removing/installing 46.3
pads (from 1986 m.y.)
removing/installing 46.5a
— Parking brake assembly 46.11
— Rear brake
assembly 46.6
shoes, adjusting 46.9
shoes, removing/installing 46.7

Bumpers
— Front bumper/spoiler 63.2
— Rear bumper 63.3

Camper Equipment
— Ceiling cabinet
with A/C, installing 76.9
with A/C, removing 76.7
without A/C, removing/installing 76.6
— Clothes closet
installing 76.11, 76.14
removing 76.9, 76.11
— Curtains
removing/installing 76.3
— Curtain rail w/fresh air duct
installing 76.6
removing 76.5
— Propane tank
removing/installing 76.23
— Refrigerator
air supply modification 76.25
installing 76.25
removing 76.24
— Sink cabinet
installing 76.23
removing 76.15
— Storage chest w/water tank
installing 76.17
removing 76.15
— Storage shelf
removing/installing 76.2
w/curtain rod
removing/installing 76.4
— Water faucet w/pump switch
removing/installing 76.20
— Water level sensor
removing/installing 76.20
— Water pump/kitchen
removing/installing 76.18

Clutch
— Bearing shaft bushing
Syncro 30.9
— Brake/Clutch fluid
reservoir 30.3
— Clutch assembly
diesel 30.5
gasoline 30.4
Syncro 30.10
— Controls 30.2
Syncro 30.8
— Diaphragm spring 30.6
Syncro 30.11
— Hydraulic system 30.2
Syncro 30.8
— Pressure plate 30.6
air-cooled modification 30.6
Syncro 30.11
— Release bearing 30.7a
air-cooled only 30.7
— Release shaft bushing 30.3
Syncro 30.9
— Roll pin 30.3

Cooling System—Air-cooled AFC
— Cooling air control flap
adjusting 19.3
— Cooling fan
removing 19.3
— Fan housing assembly 19.2
removing 19.3
— Snap-lock wiring connectors
installing 19.19
— Thermostat
checking 19.3
— V-belt
assembly 19.2
tension, adjusting 19.3

Cooling System—Diesel
— Antifreeze hydrometer
checking 19.7
— Coolant assembly 19.4
draining/filling 19.6
mixture ratio 19.5
pipes, replacing 19.7a
— Snap-lock wiring connectors
installing 19.19
— Pressure cap, checking 19.7

Cooling System—Water-cooled
— Antifreeze hydrometer
checking 19.17
— Coolant assembly 19.8, 19.11, 19.14
draining/filling 19.15
expansion tank, checking 19.18
hose layout 19.10
leak checks 19.17
mixture ratio 19.18
refill tank 19.9, 19.13
— Hose spring clamps
removing/installing 19.16
— Hot footwell kit, installing 19.20
— Radiator assembly 19.12
thermo-switch 19.12

Cruise Control
— System, repairing 27.25
— Troubleshooting 27.29

Current Flow Diagrams
— *See Electrical Wiring*

Differential—Automatic Trans.
— Adjusting ring 39.51
— Assembly 39.56
— Cover plate 39.51
— Differential bearing outer race 39.53
— Drive flange oil seal 39.53
— Final drive assembly 39.50
— Governor oil seal 39.52
— Pinion bearing
inner race 39.54
outer race 39.53
— Pinion oil seals 39.52
— Ring gear 39.56

Differential—Automatic Trans. (cont'd)
— Ring gear/pinion
adjusting 39.57
backlash 39.61
— Torque converter oil seal 39.51

Differential—Manual Trans.
091, 091/1, 4-Speed
094 5-Speed (except 4WD)
— Assembly 39.2
— Bearings 39.3
— Housing 39.3
— Pinion, adjusting 39.10
— Pinion/Side gears 39.6
— Ring gear 39.3
adjusting 39.12
backlash 39.13
— Ring/Pinion gears
adjusting 39.7
— Shim S_3 39.11

Differential—Manual Trans.
094 5-Speed with 4WD
— Differential with lock
assembly 39.20
bearing outer race 39.24
bearings 39.21
housing 39.21
pinion shafts 39.22
ring gear 39.20
— Differential without lock
assembly 39.15
bearing outer race 39.19
bearings 39.16
housing 39.16
pinion shafts 39.17
ring gear 39.15
— Driveshaft flange oil seal 39.44
removing/installing 39.43
— Front final drive 39.30
adjusting rings 39.32
axle flange 39.32
circlip 39.33
housing 39.34
mounting 39.32
technical data 39.42
— Front pinion 39.39
bearing 39.40
grooved nut 39.40
turning torque 39.41
— Locking pin 39.28
— Pinion/Side gears 39.25
— Removing 39.33
— Ring gear/Pinion
adjusting 39.26

Do-it-yourself Service
(Appendix)
— Changing a wheel A21
— Emergency starting A25
— Fuses A22
— Headlight adjustment A25

Do-it-yourself Service
(Appendix) (cont'd)
— Jack and tools A20
— Replacing bulbs A23
— Spare wheel A20

Doors—Front
— Adjusting 57.5
— Assembly 57.2
— Glass 57.4
— Guide channel 57.5
— Handles 57.3
— Lock/Lock rod 57.3
— Lost/Broken keys
code location 57.8
— Power door locks 57.6
— Whistling noises
eliminating 57.10
— Window regulator 57.4

Doors—Rear
— Center hinge
adjusting 58.9
assembly 58.8
removing/installing 58.9
— Sliding door 1980-1984
bowden cables, adjusting 58.7
door cover 58.3
door handle inner/outer 58.3
door lock buffer 58.3
lock, front 58.2
lock, rear 58.6
lock plate, remote control 58.6
lubricating 58.7
removing/installing 58.4
striker plate, adjusting 58.5
— Sliding door, from 1985
assembly 58.10
central lock 58.20
door cover 58.11
handle 58.22
hinge link, adjusting 58.16
hinge link, assembly 58.21
modifications 58.11
remote control lock 58.18
removing/installing 58.12
roller guides, adjusting 58.14
striker pin, adjusting 58.15

Electrical Wiring—Air-cooled AFC
— 1980, 1981
cautions and warnings 97.2
fresh air fan 97.23
fuse/relay panel 97.10
heater booster 97.24
main wiring diagram 97.12
rear window wiper 97.26
seat belt interlock system 97.27
— 1982, 1983
cautions and warnings 97.2
fresh air fan 97.23
fuse/relay panel 97.10
heater booster 97.24

WARNING —

- *Automotive service and repair is serious business. You must be alert, use common sense, and exercise good judgement to prevent personal injury and complete the work safely.*
- *Before beginning any work on your Volkswagen, thoroughly read all the Cautions and Warnings listed near the front of this manual.*
- *Always read the complete procedure before you begin the work. Pay special attention to any Cautions and Warnings that accompany that procedure, or other information on a specific topic.*

Electrical Wiring—Air-cooled AFC (cont'd)
— 1982, 1983 (cont'd)
main wiring diagram 97.18
rear window wiper 97.26
seat belt interlock system (1982 only) 97.27

Electrical Wiring—Camper
— Auxiliary battery 1986-1989 (man. trans.) 97.34
(also see 97.53)
— Battery level indicator lights 97.30
— Camper electrical equipment
1980-1985 97.32
from 1986 97.33
— Water pump 97.31
— Water tank level indicator lights 97.30

Electrical Wiring—Diesel
— 1982
auxiliary heater BA6 (Canada only) 97.47
cautions and warnings 97.2
fuse/relay panel 97.10
heater booster 97.49
main wiring diagram 97.36
— current track index 97.36
rear window wiper 97.26
— 1983
auxiliary heater BA6 (Canada only) 97.47
cautions and warnings 97.2
fuse/relay panel 97.10
heater booster 97.49
main wiring diagram 97.41
current track index 97.41
rear window wiper 97.26

Electrical Wiring—General
— Battery/Ground cables 97.9a
disconnecting/connecting 97.6
— Cautions and Warnings 97.2
— Dashboard wiring harness 97.7
— Engine/Body ground connections 97.6

Electrical Wiring—General (cont'd)
— Fuse/Relay panel, removing
1980-1985 97.10
from 1986 m.y. 97.10a
— How to read wiring diagrams 97.4
— Main wiring harness 97.8
— Starter cable routing 97.9
— Symbols used in wiring diagrams 97.5
— Troubleshooting 97.3
— Working on the electrical system 97.3

Electrical Wiring—Water-cooled
— Air conditioning
1984, 1985 97.137
1986-1988 97.139
from 1989 97.142
— Automatic transmission
1986-1989 97.146
from 1990 97.219
— Auxiliary battery
1986-1989 auto. trans. 97.221
from 1990 97.224
See also 97.29
— Auxiliary heater BA6
from 1987 Canada only 97.148
— Auxiliary heater BBW46 (Syncro)
1986-1988 Canada 97.151
from 1989 Canada 97.155
— Central locking system
1986 97.165
1987-1989 97.162
from 1990 97.226
— Crankcase ventilation heat element
1985 97.165
1986 97.166
— Cruise control
auto. trans.
1986 97.168
1987-1989 97.176
from 1990 97.229
— Cruise control man. trans.
1986 97.174
1987-1989 97.171
from 1990 97.232
— Daytime running lights (Canada)
to Dec. 1989 97.234
from Dec. 1989 to May 1990 97.238
from May 1990 97.241
— Differential lock
1986-1989 Syncro 97.178
— Heated driver's seat
1986 97.179
1987-1989 Canada 97.181
from 1990 Canada 97.244
— Main wiring diagram
1983, 1984 97.54
1985 97.60
1986
up to VIN G 055 689 97.67

Electrical Wiring—Water-cooled (cont'd)
— Main wiring diagram (cont'd)
from VIN G 055 690 97.85
1987 97.102
1988, 1989 97.119
from 1990 97.201
— Power mirrors
1986 up to VIN G 105 000 97.183
1986 from VIN G 105 001 97.185
from 1987 97.185
— Power windows
1986 97.187
from 1987 97.189
— Radio 1986 97.191
— Rear footwell heater blower
1983-1985 97.194
— Stereo radio
1987-1989 97.195
— Stereo radio with amplified speakers
from 1988 97.197
— Stereo radio with 4 speakers
from 1990 97.246
— 450-Watt radiator cooling fan
1986-1989 97.200

Emission Controls
— Air-cooled AFC
Calif. 1981 26.4
Calif. except 1981 26.3
— Catalytic converter
checking 26.11
— EGR valve 26.5
USA (except Calif.) and Canada 26.2
— Diesel 26.6
— Water-cooled Digifant assembly 26.9
— Oxygen sensor
water-cooled Digijet 26.8

Engine—Air-cooled AFC
— Assembling
crankcase 13.6, 13.14
sheet metal 13.2
— Camshaft 13.14
— Carbon deposits, reducing 15.25
— Carrier/Support 13.5
— Compression pressure
checking 15.2
values 2a
— Connecting rod 13.16
— Crankshaft
assembly 13.16
circlips 13.16
end play 13.10
oil seals 13.9
pilot bearing 13.17
— Cylinder 13.11
— Cylinder head 15.2
— Disassembling
crankcase 13.6
sheet metal 13.2

Engine—Air-cooled AFC (cont'd)
— Distributor
drive gear 13.16
driveshaft 13.8
installing 13.9
— Flywheel 13.9
— Gasoline additive 15.25
— Hydraulic valve lifters 15.6
— Installing 10.5
— Lubrication
assembly 17.2
oil cooler 17.2
oil pressure switch 17.2
oil pump 17.2
— Piston rings 13.11
— Pistons 13.11
— Removing 10.2
— Rocker arm shaft 15.3
— Torque converter drive plate 13.9
— Valves
assembly 15.2
dimensions 15.3
guides 15.4
hydraulic lifters 15.6
seats 15.4
springs 15.2

Engine—Diesel
— Camshaft assembly 15.10
end play 15.15
oil seal 15.15
radial clearance, checking 15.15a
run-out 15.15
— Camshaft drive belt 13.18
— Compression pressure
checking 15.16
values 2a
— Connecting rod 13.27
bearing clearance 13.30
bolts 13.30
side clearance 13.30
— Crankshaft 13.22
bearing caps 13.22
drive belt cover 13.21a
end play 13.24
journal sizes 13.23
— main bearing clearance 13.25
oil seal
drive belt side 13.26
flywheel side 13.25
sprocket bolt 13.21
— Cylinder block 13.27
bore dimensions 13.30
clearance 13.30
— Cylinder head
assembly 15.8
bolts 15.9
distortion 15.11
gasket 15.9
— Cylinder head gasket 13.19, 13.31
— Flywheel 13.23
— Installing 10.7
— Intermediate plate 13.23

Engine—Diesel (cont'd)
— Intermediate shaft oil seal 13.22
— Lubrication system
assembly 17.4
oil cooler 17.4
oil filter 17.4
oil pan 17.4
oil pressure switch 17.4, 17.6
oil pump 17.4
— Pilot bearing 13.22
— Piston 13.27
clearance 13.29
diameter 13.29
height 13.31
identification 13.31
marking 13.28
pin 13.28
ring end gap 13.29
ring side clearance 13.29
rings 13.27
— Removing 10.6
— Valve assembly 15.10

Engine—Water-cooled
— Assembling/Disassembling 13.32
— Camshaft 13.50
— Carbon deposits, reducing 15.25
— Carrier/Support 13.37a
— Compression pressure
checking 15.20
values 2a
— Crankshaft assembly 13.52
circlips 13.54
drive gear 13.54
end play 13.40
oil seals 13.39
pilot bearing 13.56
replacing (1.9L) 13.57
— Cylinder 13.43
— Cylinder head assembly 15.17
installing 15.23
sealing 15.23, 15.26
— Distributor
drive gear 13.38
driveshaft 13.38
installing 13.38
— Engine block assembly 15.22
— Flywheel 13.40
— Gasoline additive 15.25
— Installing 10.10
— Lubrication system
assembly 17.7
crankcase breather,
heating pipe 17.9
oil pressure switch 17.9
oil pump 17.9
— Piston pin hole burrs
removing 13.47
— Pistons 13.43
classifications 13.44
pin 13.44
rings 13.45

Engine—Water-cooled (cont'd)
— Pushrod tubes
replacing 15.25
— Removing 10.8
— Torque converter drive plate 13.40
— V-belt pulley 13.34, 13.42
— Valves
assembly 15.17
dimensions 15.18
guides 15.20
hydraulic lifters 15.23
seats, refacing 15.18
springs 15.18

Exhaust System
— Air-cooled AFC
Calif. 1981 26.4
Calif. except 1981 26.3
USA (except Calif.)
and Canada 26.5
— Catalytic converter
checking 26.11
— Diesel 26.6
— Oxygen sensor
water-cooled Digijet 26.8
— Water-cooled
Digifant 26.9
Digijet 26.7

Fuel Injection—Air-cooled AFC
— AFC system check 24.15
— Air filter housing 24.8
— Auxiliary air regulator 24.8
— Cold-start valve 24.5
— Control unit/Wiring harness 24.12
— Deceleration valve 24.7
— Double relay 24.13
— Full throttle enrichment
switch 24.13
— Idle speed/CO 24.10
— Injector resistance 24.6
— Injector spray pattern/
leak checking 24.7
— Intake air sensor housing 24.8
— Intake air/temp. sensors 24.9
— Oxygen sensor/Wiring 24.16
— Pressure regulator 24.5
— Speed limit switch 24.14
— System components 24.2
Calif. 24.4
USA (except Calif.)
and Canada 24.3
— Temperature sensor II 24.13
— Thermo-time switch 24.6
— Voltage supply/
series resistance 24.6

Fuel Injection—Diesel
— Cold start cable 23.5
— Engine speed 23.5
— Fuel cut-off solenoid 23.5
— Fuel delivery valve/housing 23.7

WARNING —

- *Automotive service and repair is serious business. You must be alert, use common sense, and exercise good judgement to prevent personal injury and complete the work safely.*
- *Before beginning any work on your Volkswagen, thoroughly read all the Cautions and Warnings listed near the front of this manual.*
- *Always read the complete procedure before you begin the work. Pay special attention to any Cautions and Warnings that accompany that procedure, or other information on a specific topic.*

Fuel Injection—Diesel (cont'd)
— Fuel filter water indicator kit
installing 23.10
— Fuel injectors 23.8
— Injection pump 23.6
— Injection pump/valve timing 23.3
— Injection system 23.2
— Injection timing 23.4

Fuel Injection—Water-cooled Digifant
— Deceleration fuel shutoff 24.60
— Electrical testing 24.61
— Fuel injection system
components 24.48
repairing 24.46
— Fuel injectors, checking 24.56
— Full throttle enrichment
checking 24.60
— Idle speed/CO content
checking/adjusting 24.50
— Idle stabilizer
checking 24.53
— Intake air sensor
checking 24.57
— Oxygen sensor
checking 24.54
— Pressure regulator
checking 24.55
— Safety precautions 24.42
— Technical data 24.43
— Throttle valve
basic adjustment 24.37
— Throttle valve switch 24.58

Fuel Injection—Water-cooled Digijet
— Air filter housing 24.27
— Auxiliary air regulator 24.27
— Control unit/Wire harness 24.31
checking 24.35
— Data/Specifications 24.18
— Double relay 24.32
— Fuel injectors 24.25
troubleshooting 24.38

Fuel Injection—Water-cooled Digijet (cont'd)
— Full throttle enrichment switch 24.34
checking/adjusting 24.29
— Idle speed/CO
checking/adjusting 24.29
— Intake air sensor 24.28
housing 24.27
— Pressure regulator 24.25
— System check 24.20
System components 24.22
early version 24.24
late version 24.24a
— Temperature sensor I 24.28
— Temperature sensor II 24.32
— Throttle valve/deceleration/
idle switch 24.33

Fuel Supply—Air-cooled AFC
— Accelerator linkage/cable
auto. trans. 20.8
man. trans. 20.6
— Fuel filter 20.4
— Fuel gauge sending unit 20.4
— Fuel pump 20.7
— Fuel system 20.2
leak checking 20.5
— Fuel tank 20.4

Fuel Supply—Diesel
— Accelerator linkage/cable 20.14
— Fuel gauge sending unit 20.13
— Fuel system 20.10
leak checking 20.13
— Fuel tank 20.12

Fuel Supply—Water-cooled Digifant
— Accelerator linkage/cable
adjusting 20.32
auto. trans. 20.31
man. trans. 20.30
— Charcoal filter 20.33
— Fuel gauge sending unit 20.29
— Fuel pump 20.29
— Fuel system 20.26
leak checking 20.21
— Fuel tank 20.28

Fuel Supply—Water-cooled Digijet
— Accelerator linkage/cable
auto. trans. 20.23
man. trans. 20.22
— Charcoal filter valve 20.20
— Fuel filter 20.18
— Fuel gauge sending unit 20.18
— Fuel pump 20.19
— Fuel system 20.16
— Fuel tank 20.18
— Leak checking 20.21

Glass, Window Regulators
— Gluing rubber window seals
from 1986 MY
rear lid window 64.5
side window 64.4
sliding door window 64.5
— windshield 64.3
— Power window motor
from 1986 MY
installing 64.7
removing 64. 6
— Sliding window
replacing guides 64.2

Heater—Auxiliary BBW 46
— Combustion air blower
adjusting 82.32
removing/installing 82.32
— Components 82.20
— Electrical wiring 82.24
— Engine coolant system
draining/refilling 82.35
— Felt pad
removing/installing 82.29
— Flame head
removing/installing 82.33
— Flame switch
checking 82.30
removing/installing 82.30
— Fuse S24
removing/installing 82.33
— Glow plug, checking 82.30
— Heater core
removing/installing 82.33
— Metering pump
flow rate checking 82.35
— Operating 82.25
— Recirculation pump
removing/installing 82.32
— Series resistor
removing/installing 82.32
— Temperature sensor
checking 82.31
removing/installing 82.31
— Waterflow 82.22

Heater Booster—Air-cooled AFC
— Air circulation blower 82.7
— Assembly 82.3
— Combustion air blower 82.3
— Control flaps 82.8
— Defroster/Footwell flaps 82.7
— Flame switch 82.5
— Fuel pump 82.6
— Glow/Spark plug 82.3
— Heater booster/components 82.2
— Heater lever switch 82.8
— Ignition coil 82.6
— Overheat switch 82.7
— Safety switch 82.7
— Temperature regulating switch 82.5
— Temperature sensor 82.6
— Troubleshooting 82.10

Heater Booster—Water-cooled
— Air circulation blower 82.17
— Combustion air blower 82.14
— Control valve 82.17
— Flame switch 82.15
— Fuel pump 82.17
— Glow/Spark plug 82.14
— new style 82.14a
— Heater booster/Components 82.12
— Heater housing 82.14
— Ignition coil 82.17
— Overheat switch 82.15
— System components 82.12
— Temperature regulating switch 82.16
— Temperature sensor 82.16
— Troubleshooting 82.18

Heater/Ventilation
— Controls/Assembly
air-cooled
with fresh air fan 80.8
without fresh air fan 80.5
water-cooled 80.12
— Flap housing
air-cooled
with fresh air fan 80.10
water-cooled 80.14
— Heater, additional
under rear bench seat 80.16
— Heater control flap cable 80.4
— Heater/Fresh air box housing
splitting 80.15
— Rear air duct 80.3
— System components
air-cooled 80.2
water-cooled 80.11

Hoods/Lids
— Rear door/lock cylinder 55.2
— Rear lid spring 55.4
— Rubber door stop 55.3
— Striker plate 55.3

Identification—Numbers/Codes
— Automatic trans. 4
— Engine 2
— Front final drive Syncro 3b
— Manual trans. 3
— Type/Model/Assemblies 2
— VIN (Vehicle Identification Number) 2 and Foreword

Ignition Distributor and Settings
— Air-cooled AFC
CAN/USA, (except Calif.) 8
Calif. 9
— Water-cooled Digijet 10
— Digifant 11

Ignition System—Air-cooled AFC
— California 28.8
distributor 28.11
distributor drive 28.20
Hall control unit/generator 28.14
Hall ignition, troubleshooting 28.17

Ignition System—Air-cooled AFC (cont'd)
— California (cont'd)
idle stabilizer 28.16
ignition/distributor settings 28.9
ignition timing 28.11
rotor 28.10
vacuum advance/retard 28.13
vacuum unit 28.12
wires/coil, checking 28.10
— USA (except Calif.)
and Canada 28.2
distributor 28.6
distributor drive 28.4
ignition/distributor settings 28.3
ignition timing 28.5
rotor 28.4
vacuum unit/advance 28.7
wires/coil, checking 28.4

Ignition System—Diesel
— Glow plug light
troubleshooting 28.27
— Quick glow
troubleshooting 28.24

Ignition System—Water-cooled Digifant
— Distributor, installing 28.44
— Hall sender, checking 28.43
— Ignition and injection system
repairing 28.39
— Ignition distributor 28.40
— Ignition settings 28.41
— Ignition switching function
checking 28.44
— Ignition timing 28.42

Ignition System—Water-cooled Digijet
— Centrifugal advance 28.34
— Distributor driveshaft 28.32
— Hall control unit 28.36
— Hall generator 28.37
— Idle stabilizer 28.38
— Ignition cable connectors
new style 28.30a
— Ignition coil 28.32
— Ignition distributor/
Hall generator 28.29
— Ignition distributor/settings 28.29
— Ignition wires/connectors 28.31
— Rotor 28.31
— Suppressor connectors 28.32
— Trigger wheel 28.38
— Vacuum advance/retard 28.35
— Vacuum unit 28.35

Instruments, Radio 1980-1984
— Cigarette lighter, replacing 90.31
— Fuel gauge
checking 90.5, 90.9
troubleshooting 90.13

Instruments, Radio 1980-1984 (cont'd)
— Fuel gauge sender
removing/installing 90.11
— Instrument cluster
assembling/disassembling 90.2, 90.6
removing/installing 90.10
— Light emitting diodes (LED)
checking 90.5
identifying 90.4, 90.8
— Multi-point connector
identifying 90.4, 90.8
— Speedometer calibration 90.30
— Speedometer cable
removing/installing 90.10
— Voltage stabilizer 90.4, 90.8

Instruments, Radio From 1985
— Cigarette lighter, replacing 90.31
— Coolant temperature gauge
locating 90.14
troubleshooting 90.21
— Dynamic oil pressure system
assembly 90.22
removing/installing 90.23
troubleshooting 90.24
— Fuel gauge, locating 90.14
troubleshooting 90.20
— Instrument cluster
assembling/disassembling 90.14
removing/installing 90.10
— Light emitting diodes (LED)
checking 90.18
identifying 90.18
— Multi-point connector
identifying 90.18
— Speedometer calibration 90.30
— Speedometer cable
installing
from VIN 25 H 040 185, except Syncro 90.17
removing/installing 90.17
— Voltage stabilizer, checking 90.18

Instruments, Radio From 1990
— Heidelberg VI fixed coded radio
coding a new or remanufactured radio 90.32
reactivating radio after reconnecting power 90.33
unlocking an electronically controlled radio 90.34

Lifting Vehicle
— Hoist/Floor jack 5

Lights
— Bulb holder 94.6

WARNING —

- *Automotive service and repair is serious business. You must be alert, use common sense, and exercise good judgement to prevent personal injury and complete the work safely.*
- *Before beginning any work on your Volkswagen, thoroughly read all the Cautions and Warnings listed near the front of this manual.*
- *Always read the complete procedure before you begin the work. Pay special attention to any Cautions and Warnings that accompany that procedure, or other information on a specific topic.*

Lights (cont'd)
— Headlight 94.4
aerodynamic 94.5a
adjusting 94.5
mounting frame 94.5
removing 94.5
— Ignition key, deburring 94.3a
— Intermittent windshield wiper 94.4
— Steering column
covers 94.3
lock 94.3
lock cylinder 94.4
switches 94.2
— Tail light 94.6
— Turn signal switch 94.3

Lubrication System—Air-cooled AFC
— Assembly 17.2
— Oil cooler 17.2
— Oil pressure switch 17.2
— Oil pump 17.2

Lubrication System—Diesel
— Assembly 17.4
— Oil cooler 17.4
— Oil filter 17.4
— Oil pan 17.4
— Oil pressure switch 17.4
— Oil pump 17.4

Lubrication System—Water-cooled
— Assembly 17.7
— Heating pipe,
crankcase breather 17.9
— Oil pressure switch 17.9
— Oil pump 17.9

Maintenance Schedules
— Lubrication, Emissions and Vehicle Maintenance Schedules (Appendix)
air-cooled, water-cooled and diesel models 1982-1985 A28
water-cooled models from 1986 A32

Mirrors
— Outside, electric
adjustment range, increasing 66.3
assembly 66.4
glass, removing/installing 66.2

Radio
— *See Instruments, Radio*

Refrigerator
— *See Camper Equipment*

Roof
— Front headliner, installing 75.7a
removing 75.7
— Luggage rack, removing 75.8
— Pop-up roof, installing 75.3
removing 75.4
— Pop-up roof seal, installing 75.6a
removing 75.6
— Roof vent, installing 75.7
removing 75.6a

Seat belts
— Automatic 3-point seat belts
retrofit installation 68.5
— Automatic rear 3-point seat belts
retrofit installation 68.7
— Automatic 3-point left center seat belt, retrofit installation 68.10
— Illuminated vanity mirrors
replacing bulbs 68.13
— Seat belts, inspection 68.2
webbing defects 68.4
— Template measurements 68.6

Seats
— Armrest, removing/installing 72.4
— Armrest, adjustable
assembly 72.5
removing/installing 72.6
— Front seat, removing/installing 72.2
— Front seat backrest
removing/installing 72.2
— Heated seats
component locations 74.2
heat elements 74.21
— Rear seat with storage locker
removing/installing 77.2
— Roof beds, boards
removing/installing 77.3

Steering
— Power steering
checking for leaks 48.7
pressure/flow limiting valve 48.11
suspension changes 48.6
system layout 48.6
technical data 48.6
— Power steering pump
removing/installing 48.9
repairing 48.10

Steering (cont'd)
— Power steering pump pressure
checking 48.7
— Power steering system
filling/bleeding 48.7
— Steering column switches 48.2
— Steering drive/gear 48.4
— Steering lock assembly 48.3
— Steering wheel/column 48.2
— Tie rods 48.4
removing 48.5
— Troubleshooting 48.12

Sunroof
— Panel
adjusting 60.3
guide plate adjusting 60.4
height alignment
front 60.3
rear 60.4
parallel adjustment 60.4
removing/installing 60.2
— Trim panel
removing/installing 60.3
— Water drains, cleaning 60.6
rear drain hose, replacing 60.6

Suspension—Front
— Assembly
early version 40.2
late version 40.7
— Ball joints assembly 40.10
lower 40.12
— Coil spring
removing/installing 40.3
— Lower control arm
bushing, early version 40.6
bushing, later version 40.8
removing/installing 40.3
— Shock absorber
removing/installing 40.4
— Steering arm, checking 40.12
— Steering knuckle
assembly 40.12
checking for wear 40.12
modification, grease seal 40.13
modification, brake disc interference 40.14
— Subframe wax preservation 40.14
— Upper control arm
bushing 40.5
lower 40.6
removing 40.5
wax preservation 40.14
— Wheel bearing
adjusting 40.11
assembly 40.10

Suspension—Front, Syncro
— Axle shaft, assembly 40.29
length 40.30
removing/installing 40.28

Suspension—Front, Syncro (cont'd)
— Ball joints
pressing 40.25
— Coil spring
removing/installing 40.20
— Components assembly 40.15
— CV joint, inner
assembly 40.29
disassembling/assembling 40.33
pressing 40.31
— CV joint, outer
assembly 40.29
disassembling/assembling 40.32
removing 40.31
— Guards, drive shaft/engine
removing/installing 40.28
— Lower control arm bushings 40.19
— Shock absorber
removing/installing 40.20
— Subframe, components 40.26
installing 40.28
removing 40.27
— Upper control arm bushings 40.19
removing/installing 40.18a
— Wheel bearing pressing 40.24
— Wheel bearing housing
assembly 40.23
removing/installing 40.17
— Wheel hub assembly 40.23
pressing 40.24

Suspension—Rear
— Axle shaft assembly 42.4, 42.7
removing/installing 42.4
— Constant velocity joint
assembly 42.7
disassembling/assembling 42.8
removing/installing 42.8
— Rear axle assembly 42.4
— Rear wheel suspension
assembly 42.2
— Shock absorber
bushing/sleeve 42.3
— Trailing arm bushing 42.3
— Wheel bearings, inner/outer
grease seals 42.5
removing/installing 42.5
— Wheel studs
removing/installing 42.6

Tarpaulin
— Canada 61.2

Technical Data
—Capacities Appendix 27
—Cylinder Location Appendix 27
—Digifant General 12
—Engine Appendix 27
—Vehicle identification Appendix 26

Tires
—Rotating 44.1a

Torque Converter
— Bushing 32.3
— Code letter 4, 32.2
— Draining 32.2
— Installing 32.3
— Oil seal 32.3

Towing
— Procedure 6, 7

Transmission 4-speed 091
— Adjusting rings 35.3
— Assembly 35.2
— Clutch housing/
mechanism 35.12
— Differential 35.4
— Drive flange 35.3, 35.4
oil seal 34.18, 35.15
— Gear carrier/Gearshift
housing 35.6, 35.18
— Gear carrier housing
assembly 35.8, 35.16
— Gears
1st gear needle bearing 35.27
3rd gear end play 35.29
— Gearshift lever 34.3
— Gearshift linkage 34.2
assembly 34.3
adjusting 34.4
bearing plate 34.4
— Installing 34.15
— Interlock/detent plungers 35.17
— Lever bearing plate 34.4
— Main shaft assembly 35.9, 35.20
ball bearing 35.23
oil seal 35.13
— Pinion needle bearing 35.23, 35.29
— Pinion shaft assembly 35.9, 35.24
— Rear main shaft 35.5
— Release shaft bushing 35.13
— Removing 34.14
— Retaining ring 35.7
— Reverse gear 35.14
end play 35.17
shaft circlip 35.15
— Rocker lever shaft 35.19
— Selector shaft 35.19
— Shift forks 35.10
— Shift rod 34.3
— Starter bushing 35.13
— Synchronizers
1st/2nd gear 35.26, 35.28
3rd/4th gear 35.21
circlips 3rd/4th gear 35.21, 35.26
ring identification 35.30
— Tapered roller bearing 35.26
— Transmission housing 35.14

Transmission 4-speed 091/1
— Adjusting rings 35.32
installing 35.35
marking/removing 35.34

Transmission 4-speed 091/1 (cont'd)
— Assembly 35.32, 35.36
mounting in repair stand 35.34
— Clutch housing assembly 35.42
— Differential 35.35
— Drive flange 35.32
circlip, installing 35.35
installing 35.35
oil seal 34.18
removing 35.34
— Gear carrier 35.44
assembling 35.40
assembly 35.36
cover 35.44
installing 35.39
removing 35.38
— Gears
1st/2nd, removing 35.36
3rd, end play 35.59
3rd, installing 35.59
3rd, removing 35.56
— Gear ratios 34.9, 35.60
— Gearshift lever 34.6
bearing 34.6
— Gearshift linkage 34.6
assembly 34.6
adjusting 34.8
bearings 34.6
— Installing 34.7
— Lever bearing plate 34.6
— Lubricant specifications 34.9, 35.60
— Main shaft 35.49
assembly 35.48
ball bearing 35.51
lock ring 35.52
needle bearing 35.51
oil seal 35.43
rear, removing/installing 35.35a
— Pinion shaft 35.55
assembly 35.54
needle bearings 35.57
roller bearings 35.56
— Removing 34.16
— Retaining ring 35.37
installing 35.40
removing 35.38
— Selector shaft
modifications 35.60a
parts for 35.60d
— Shift forks/synchronizers
modifications 35.60b
parts for 35.60d
— Shift rod bushing 35.46
— Shift rod mounting 34.7a
— Shift shaft oil seal 35.46
— Starter bushing 35.43
— Synchronizers
1st/2nd gear 35.58
3rd/4th gear 35.50
— Technical data 34.1a
— Transmission housing 35.45
assembling 35.39
disassembling 35.38

WARNING —

• Automotive service and repair is serious business. You must be alert, use common sense, and exercise good judgement to prevent personal injury and complete the work safely.

• Before beginning any work on your Volkswagen, thoroughly read all the Cautions and Warnings listed near the front of this manual.

• Always read the complete procedure before you begin the work. Pay special attention to any Cautions and Warnings that accompany that procedure, or other information on a specific topic.

Transmission 5-speed 094
— Adjusting rings 35.62
installing 35.65
marking/removing 35.64
— Assembly 35.62, 35.66
mounting in repair stand 35.64
— Clutch housing assembly 35.74
— Differential 35.65
— Drive flange 35.62
installing 35.65
oil seal 34.18
removing 35.64
— Gear carrier 35.76
assembling 35.70
assembly 35.66
cover 35.76
cover 35.76
installing 35.69
removing 35.68
— Gears
1st, shim 35.72
2nd, removing 35.88
3rd/4th, removing 35.88
4th, end play 35.91
4th, installing 35.91
— Gearshift lever 34.10
bearing 34.10
— Gearshift, adjusting 34.12
assembly 34.10
— Installing 34.16
— Lever bearing plate 34.10
— Main shaft 35.81
assembly 35.80
ball bearing 35.83
lock ring 35.84
needle bearings 35.83
oil seal 35.75
rear, removing/installing 35.65a
— Modifications to trans. manufactured prior to Dec. 15, 1982 35.65b
— Pinion shaft 35.87
assembly 35.86
needle bearings 35.89
roller bearings 35.88

Transmission 5-speed 094 (cont'd)
— Removing 34.16
— Retaining ring 35.67
installing 35.70
removing 35.68
— Shift rod bushing 35.78
— Shift shaft oil seal 35.78
— Starter bushing 35.75
— Synchronizer rings
checking 35.90
identification 35.92
— Synchronizers
2nd/3rd gear 35.90
4th/5th gear 35.82
assembling 35.90
checking 325.82
installing 35.90
removing 35.82, 35.88
— Technical data 34.1b
— Transmission housing 35.77
assembling 35.69
disassembling 35.68

Transmission 5-speed 094 4WD
— Adjusting rings
installing 35.96
marking/removing 35.95
— Assembling/Disassembling 35.99
— Assembly 35.94, 35.98, 35.105
— Axle flange
installing 35.96
removing 35.95
— Bearing
installing/checking 35.123
removing 35.122
inner race, removing 35.122
— Clutch housing 35.111
— Differential lock components 34.24
— Differential lock control
repairing 34.26
— Differential lock servo 34.25, 35.96
— Drive flange seal, installing 35.115
— Drive pinion 35.121
— Driveshaft flange, removing 35.104
— Flange nut
loosening/tightening 35.104
— Flange seal, installing 35.104
— Gear carrier 35.107, 35.116
disassembling/assembling 35.108
— Gears
1st, 2nd and 3rd, removing 35.122
— Gearshift linkage assembly 34.20
adjusting 34.21
— Housing 35.113
— Installing 34.23
— Intermediate housing
removing 35.106
— Low gear idler, removing 35.106
— Low gear shim, measuring 35.101
— Lower gear bearing
removing/installing 35.126
— Main shaft 35.117
bearing, removing/installing 35.119

Transmission 5-speed 094 4WD (cont'd)
— Main shaft seal
removing/installing 35.12
— Needle bearing
inner race
loosening/tightening 35.123
outer race, installing 35.126
outer race, removing 35.125
removing/installing 35.115
— Output housing 35.103
— Output shaft bearing
removing/installing 35.114
— Rear driveshaft, measuring 35.97
— Removing 34.22
— Reverse gear idler
removing/installing 35.106
— Shift rod bushing
removing/installing 35.115
— Shift shaft seal
removing/installing 35.114
— Starter bushing
removing/installing 35.112
— Synchronizer rings
identification 35.127
— Technical data 34.19
— 1st/2nd gear synchronizer
checking/installing 35.124
— 3rd gear, installing 35.125
— 3rd/4th gear synchronizer 35.118
installing 35.119

Transmission, Automatic
— Accelerator cable/linkage
090 except code letters NH 37.12
code letters NH only 37.14
— Apply shell 38.10
— ATF
checking/filling 37.9
dipstick changes 37.9
troubleshooting 37.9a
— Direct/Reverse/Forward clutches
installing 38.11
— Final drive
oil seal 37.10
— Forward clutch 38.8, 38.17
— Governor
disassembling/assembling
090 code letters NG 38.22
removing/installing
090 except code letters NG 38.23
— Governor drive gear 38.14
— Installing
090 except code letters NH 37.5
090 code letters NH only 37.6
— Kickdown lever modification
090 code letters NH, NK 38.39
— Manual valve 38.35
— Modifications 37.19
— Oil pump 38.8, 38.22
— Operating rod 38.35
— Operation 37.17, 37.19
— Parking lock 38.34

Transmission, Automatic (cont'd)
— Parking lock modification
090 code letters NH, NK 38.39
— Pressure test procedure 37.18
— Pump shaft 38.3
— Removing
090 except code letters NH 37.4
090 code letters NH only 37.6
— Reverse planetary gear set 38.12
— Reverse planetary ring gear 38.14
— Selector lever assembly 37.2
— Selector lever cable 37.3
— Separation plate
090 code letters NG 38.26
090 code letter NG
from trans. no. 17 07 0 38.28
090 code letters NH, NK 38.37
— Shift points 37.19
— Spacer springs and rollers 38.15
— Spring table
090 code letters NH, NK
up to trans. no. 16 07 0 38.30
090 code letters NG
from trans. no. 17 07 0 38.32
— Technical data
code letters NG, NH 37.1a
code letters NK 37.1b
— Transfer plate
090 code letters NG 38.26
090 code letters NG
from trans. no. 17 07 0 38.28
090 code letters NH, NK 38.37
— Transmission
assembly 38.7
090 modifications
code letters NH, NK 38.37
— Transmission/Final drive
assembly 38.2
end play 38.5
separating 38.3
— Transmission housing studs 38.4
— Turbine shaft 38.3
— Valve body
removing/installing 38.25
090 code letters NG 38.26
090 code letters NG
from trans. no. 17 07 0 38.29
code letters NG
up to trans. no. 16 07 0
— 1st/reverse brake piston 38.10
— 2nd gear brake band 38.12
— 2nd gear brake band piston 38.10
disassembling/assembling 38.24

Trim—Interior
— Coffee cup bracket, repairing 70.9
— Front door trim panel
assembly 70.2
moisture barrier 70.2
— Headlining
removing/installing 70.8

Trim—Interior (cont'd)
— Instrument panel
removing 70.5
replacing 70.6
— Sliding door trim panel
assembly 70.3
removing 70.4

Vehicle Care
— Air cleaner A10
— Battery A14
— Brake fluid A13
— Cleaning products A3
— Cooling system A11
— Corrosion protection A5
— Engine compartment A6
— Engine oil A7
— Engine oil filter A9
— Exterior A3
— Fuel filter (diesel) A10
— Fuel supply A1
— Interior 4
— Lubricants A 7
— Maintenance A5
— Power steering A10
— Replacing wiper blades A16
— Tires/Wheels A17
— V-belt A12

Vehicle Identification Number (VIN)
— VIN 2, foreword

Wheels
— Alignment
front 44.3
rear 44.4
specifications 44.2
— Alignment Syncro
determining front toe 44.3a
specifications 44.5

Windshield Wiper/Washer
— Assembly 92.2
— Rear window washer/wiper 92.5
washer pump 92.7
— Spray jets 92.4
— Troubleshooting 92.8
— Windshield washer 92.4
— Wiper arms/motor 92.3
— Wiper blade rubber insert 92.3

Wiring Diagrams
— *See Electrical Wiring*

Vanagon Quick Data 1980 through 1991

Engine—Assembly — Group 10

Compression pressures
Air-cooled—AFC
nominal: 6-9 bar (87-131 psi)
minimum: 5.0 bar (73 psi)
max. difference between cylinders: 3.0 bar (44 psi)
Water-cooled—Digijet/Digifant
nominal: 10-13 bar (145-189 psi)
minimum: 8 bar (116 psi)
max. difference between cylinders: 3.0 bar (44 psi)
Tightening torques (installing engine)
Air-cooled—AFC
engine to trans: 30 Nm (22 ft-lb)
engine carrier to mount: 25 Nm (18 ft-lb)
trans. mount: 30 Nm (22 ft-lb)
torque converter to drive plate: 30 Nm (22 ft-lb)
Diesel
engine to trans
M10 fasteners: 45 Nm (33 ft-lb)
M12 fasteners: 80 Nm (59 ft-lb)
engine mounts: 85 Nm (63 ft-lb)
support member: 45 Nm (33 ft-lb)
fuel line unions to injection pump: 22 Nm (16 ft-lb)
Water-cooled—Digijet/Digifant
engine to trans: 30 Nm (22 ft-lb)
engine carrier to body: 25 Nm (18 ft-lb)
trans. mounts: 30 Nm (22 ft-lb)
torque converter to drive plate: 20 Nm (15 ft-lb)

Crankshaft, Crankcase — Group 13

Air-cooled—AFC
tightening torques
connecting rod: 35 Nm (26 ft-lb)
case halves
small: 20 Nm (15 ft-lb)
large: 30 Nm (22 ft-lb)
flywheel to crankshaft: 60 Nm (44 ft-lb) plus 1/4 turn (90°)
torque converter drive plate to crankshaft: 90 Nm (66 ft-lb)
crankshaft end play
new: 0.07-0.13 mm (0.003-0.005 in.)
wear limit: 0.15 mm (0.006 in.)
Diesel
tightening torques
main bearing cap: 65 Nm (47 ft-lb)
connecting rod
two different types: see Repair Manual
flywheel to crankshaft: 75 Nm (54 ft-lb)
crankshaft end play
new: 0.07-0.17 mm (0.003-0.007 in.)
wear limit: 0.37 mm (0.015 in.)
Water-cooled—Digijet/Digifant
tightening torques
connecting rod
1980-1985: 45 Nm (33 ft-lb)
from 1986: 30 Nm (22 ft-lb) plus 1/2 turn
case halves
small: 20 Nm (15 ft-lb)
up to engine # DH 027 404: 35 Nm (26 ft-lb)
from engine # DH 027 404: 45 Nm (33 ft-lb)
from engine # MV 041 599: 50 Nm (37 ft-lb)
flywheel to crankshaft: 60 Nm (44 ft-lb) plus 1/4 turn (90°)
torque converter drive plate to crankshaft
1980-1985: 80 Nm (66 ft-lb)
from 1986: 110 Nm (81 ft-lb)
crankshaft end play
new: 0.07-0.13 mm (0.003-0.005 in.)
wear limit: 0.15 mm (0.006 in.)
connecting rod side clearance
wear limit: 0.7 mm (0.028 in.)

Cylinder Head — Group 15

Diesel
valve clearance (engine warm)
intake: 0.20-0.30 mm (0.008-0.012 in.)
exhaust: 0.40-0.50 mm (0.016-0.020 in.)
tightening torques
cam bearing cap: 20 Nm (15 ft-lb)

Lubrication System — Group 17

Air-cooled—AFC
oil capacity
with filter change: 3.5 L (3.7 US qt.)
without filter change: 3.0 L (3.2 US qt.)
tightening torques
drain plug: 25 Nm (18 ft-lb)
Diesel
oil capacity
with filter change: 4.0 L (4.2 US qt.)
without filter change: 3.5 L (3.7 US qt.)
tightening torques
drain plug: 25 Nm (18 ft-lb)
strainer plug (bolt): 13 Nm (9 ft-lb)
Water-cooled—Digijet/Digifant
oil capacity
with filter change: 4.5 L (4.7 US qt.)
without filter change: 4.0 L (4.2 US qt.)
tightening torques
drain plug: 25 Nm (18 ft-lb)

Cooling System — Group 19

Diesel
coolant pump V-belt
deflection: 10-15 mm (3/16-9/16 in.)
coolant capacity: 16.0 L (16.9 US qt.)
coolant reservoir cap
release pressure: 1 bar (14 psi)
tightening torques
coolant pump pulley: 20 Nm (15 ft-lb)
thermostat housing: 10 Nm (61 ft-lb)
thermoswitches: 30 Nm (22 ft-lb)
Water-cooled—Digijet/Digifant
coolant pump V-belt
deflection: 10-15 mm (3/16-9/16 in.)
coolant capacity: 17.5 L (18.4 US qt.)
coolant reservoir cap
release pressure: 0.9-1.5 bar (13-17 psi)
tightening torques
thermostat housing: 10 Nm (61 ft-lb)

Fuel Supply — Group 20

fuel tank capacity (including reserve)
Vanagon except Syncro: 60 L (16 US gal.)
Syncro: 70 L (18.5 US gal.)
reserve: 10 L (2.5 US qt.)

Diesel Fuel Injection — Group 23

idle speed: 800-850 rpm
maximum speed (no load): 4800 ± 50 rpm
tightening torques
glow plugs: 40 Nm (29 ft-lb)

Exhaust/Emissions — Group 26

tightening torques
exhaust system fasteners (M8): 20 Nm (15 ft-lb)
oxygen sensor
to 1985: 55 Nm (40 ft-lb)
from 1986: 50 Nm (37 ft-lb)

Ignition System — Group 28

firing order: 1-4-3-2
tightening torques
spark plugs
air-cooled: 30 Nm (22 ft-lb)
water-cooled: 20 Nm (15 ft-lb)

Clutch — Group 30

clutch pressure plate to flywheel: 25 Nm (18 ft-lb)

Manual Trans. — Groups 34/35

refer to Repair Manual for specifications

Automatic Trans. — Groups 37/38

ATF: Dexron® or Dexron II
ATF capacity
refill: 3.0 L (3.2 US qt.)
dry fill: 6.0 L (6.4 US qt.)

Front Suspension — Group 40

tightening torques
axle nut: 350 Nm (258 ft-lb)
brake caliper to steering knuckle (Vanagon)
1980-1985: 160 Nm (115 ft-lb)
from 1986: 270 Nm (200 ft-lb)
brake caliper to wheel bearing housing
Syncro: 250 Nm (185 ft-lb)
wheel lug bolts
1980 to Nov. 1984: 170 Nm (125 ft-lb)
from Nov. 1984: 180 Nm (133 ft-lb)

Rear Suspension — Group 42

constant velocity (CV) joint lubricant
lubricant (per joint): 90 g
type: G6 grease
tightening torques
CV joints: 45 Nm (33 ft-lb)
rear axle nut: 500 Nm (369 ft-lb)

Brakes — Group 46

brake caliper guide pin bolts (always replace)
from 1986: 35 Nm (26 ft-lb)
brake pad minimum thickness (without backing plate): 2 mm (0.079 in.)

Heater Booster — Group 82

refer to Repair Manual for specifications

Air Conditioning — Group 87

From 1986
refrigerant capacity: 1450 grams (50.75 oz.)
refrigerant oil quantities
evaporator: 2.02 oz.
accumulator: 0.3 oz.
high-pressure hose: 0.3 oz.
low-pressure hose: 0.3 oz.
compressor: 5.07 oz.

Electrical System — Groups 90-97

refer to Repair Manual for specifications

VW Part No. LPV 800 148
Bentley Stock No. VV91
ISBN 0-8376-0336-6

Robert Bentley
Information that makes the difference.®

Index

Identification (Numbers/Codes)
— Automatic transmission 4
— Compression pressure values 2a
— Engine 2
— Front final drive Syncro 3b
— Manual transmission 3, 3a
— Type/Model/Assemblies 2
— VIN (Vehicle Identification Number) 2

Lifting Vehicle
— Hoist/Floor jack 5

Towing
— Procedure 6, 7

Ignition distributor and settings
— Air-cooled AFC
Can/USA, not Calif. 8
California 9
— Water-cooled Digijet 10
— Digifant 11

Technical data
— Digifant 12

General

Type/model: Type: 25 — Model: VANAGON/VANAGON SYNCRO

Assemblies	Code letters	BHP (SAE)	RPM
Engine (air-cooled) 2.0 Liter (AFC)	CV	70	4200
Manual Transmission - 4 speed (091)	DK	—	—
Automatic Transmission (090)	NG	—	—
Engine (Diesel) 1.6 Liter	CS	50	4200
Manual Transmission - 4 speed (091)	DM/DZ	—	—
Manual Transmission - 5 speed (094)	DX	—	—
Engine (water-cooled) 1.9 Liter (Digijet)	DH	80	4800
Manual Transmission - 4 speed (091/1)	DU/ABD	—	—
Automatic Transmission (090)	NH	—	—
Engine (water-cooled) 2.1 Liter (Digifant)	MV	95	4800
Manual Transmission - 4 speed (091/1)	ABD/ACW	—	—
Automatic Transmission (090)	NK	—	—
Manual Transmission - Syncro 5-speed (094-4WD)			
(with differential lock)	AAN/AVN	—	—
(without differential lock)	AAK/AVV	—	—

CAUTION
SYNCRO TRANSMISSIONS

When checking engine performance, only use dynamometer designed to brake all four wheels at the same time.

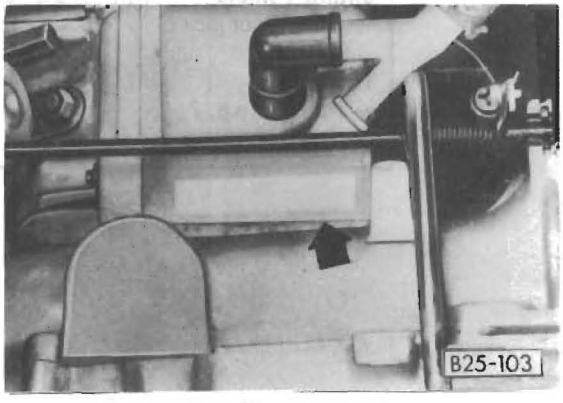

Engine number (Gasoline)
- stamped on crankcase below breather (arrow)

Vehicle Identification

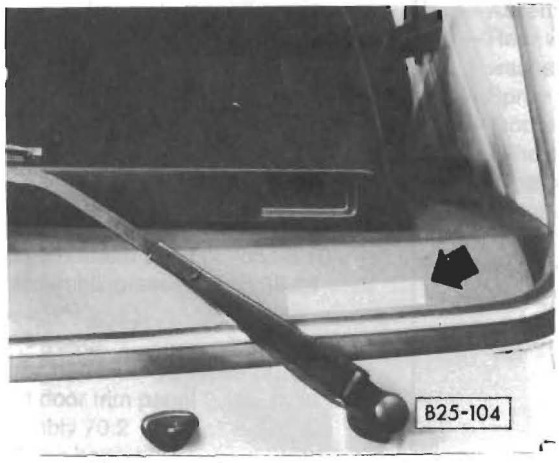

Vehicle identification number (VIN)
- on dashboard on driver's side (arrow)

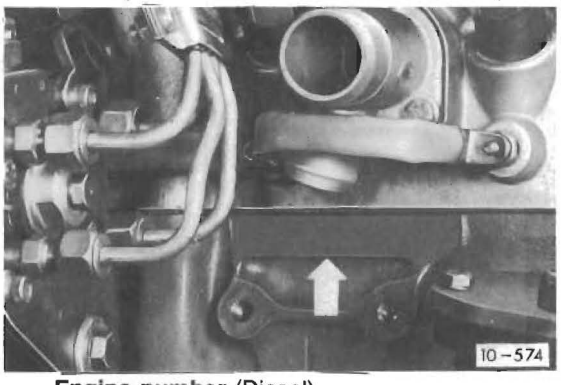

Engine number (Diesel)
- on engine block (arrow) between injection pump an vacuum pump

Beginning May 1987, engine codes are now either a two letter combination **or** a combination of one number and one letter.

Engine code continues to precede the engine number.

CAUTION

Engines with identical code **DO NOT** necessarily have identical specifications.

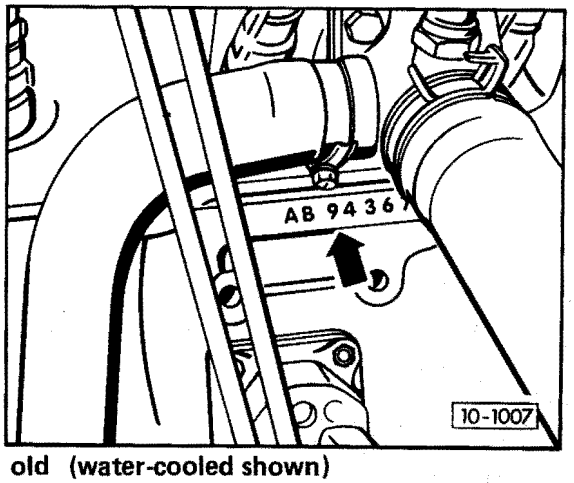

old (water-cooled shown)

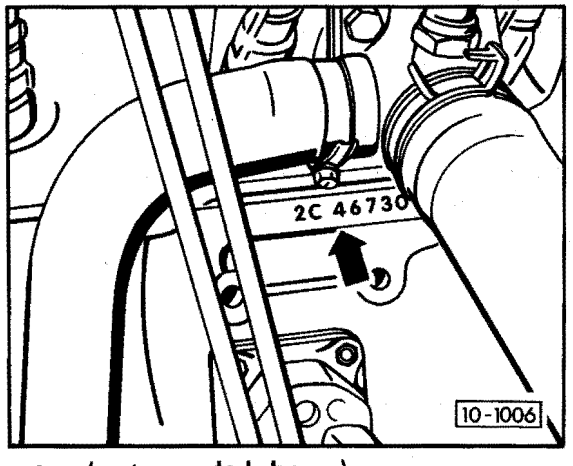

new (water-cooled shown)

Compression pressure values

Engine codes	CV	DH, MV	CS
Compression pressure values bar (psi)	6 – 9 (87 – 131)	10 – 13 (145 – 190)	34 (493)
Wear limit bar (psi)	5 (73)	8 (116)	26 (377)
Maximum permissible difference between all four cylinders bar (psi)	3 (44)		5 (73)

Manual Transmission Type 091

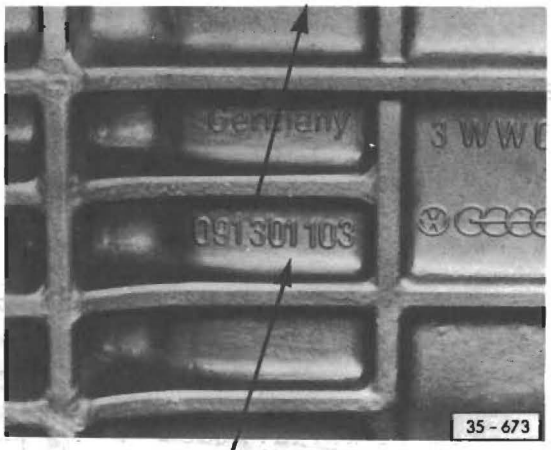

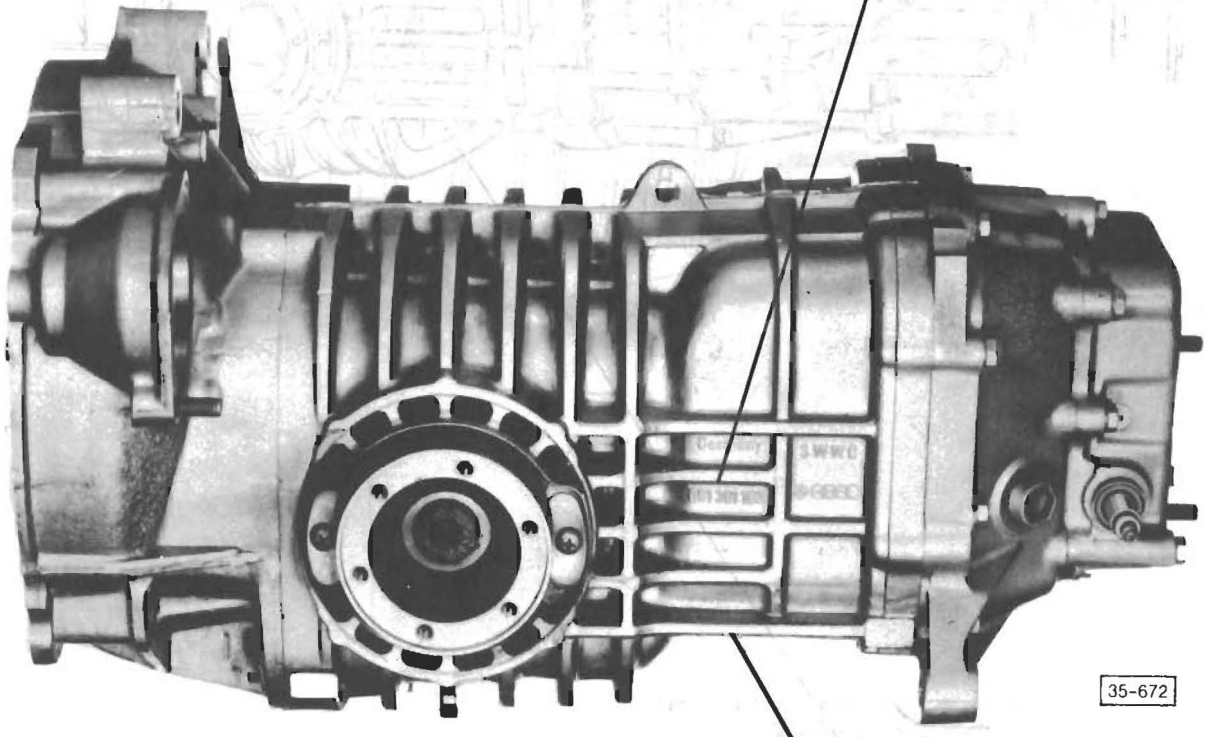

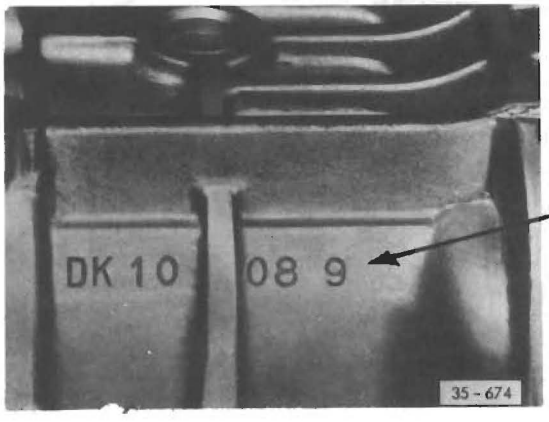

Code letters and date of manufacture

Example DK 10 08 9

- DK: code letters
- 10: day of manufacture
- 08: month
- 9: year (79)

Manual Transmission Type 094

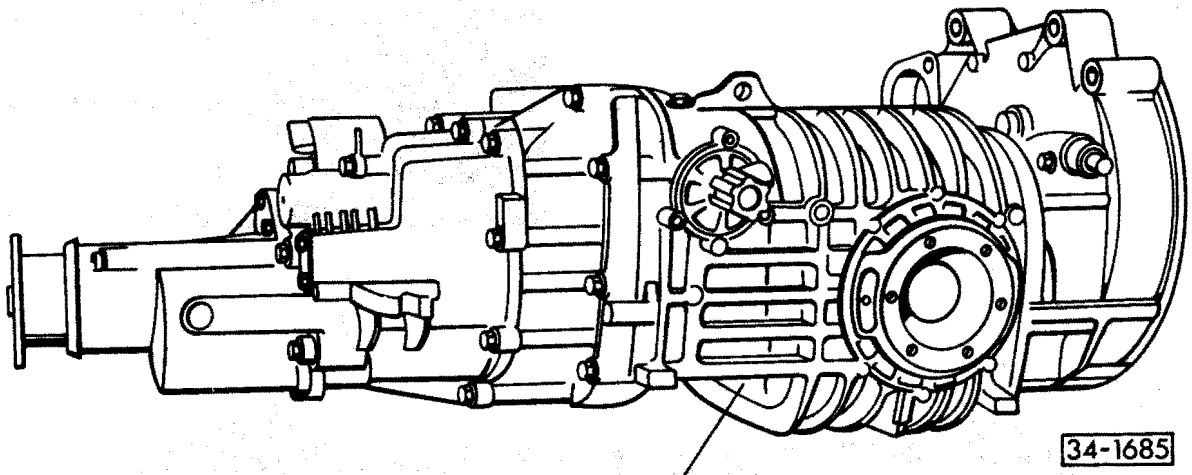

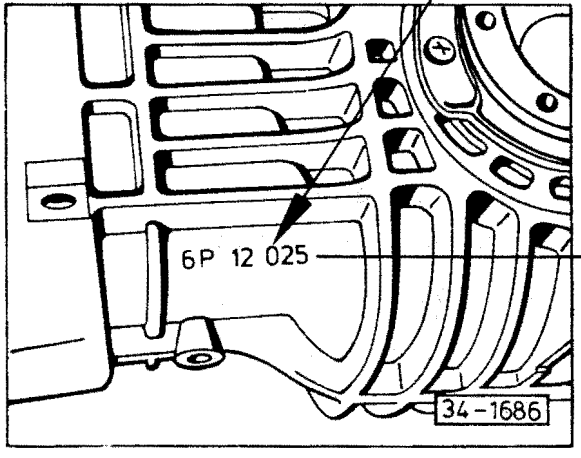

Gearbox code letters and date of manufacture:

Example: GP 12 02 5

- GP: Code letters
- 12: Day of manufacture
- 02: Month
- 5: Year (85)

Front Final Drive

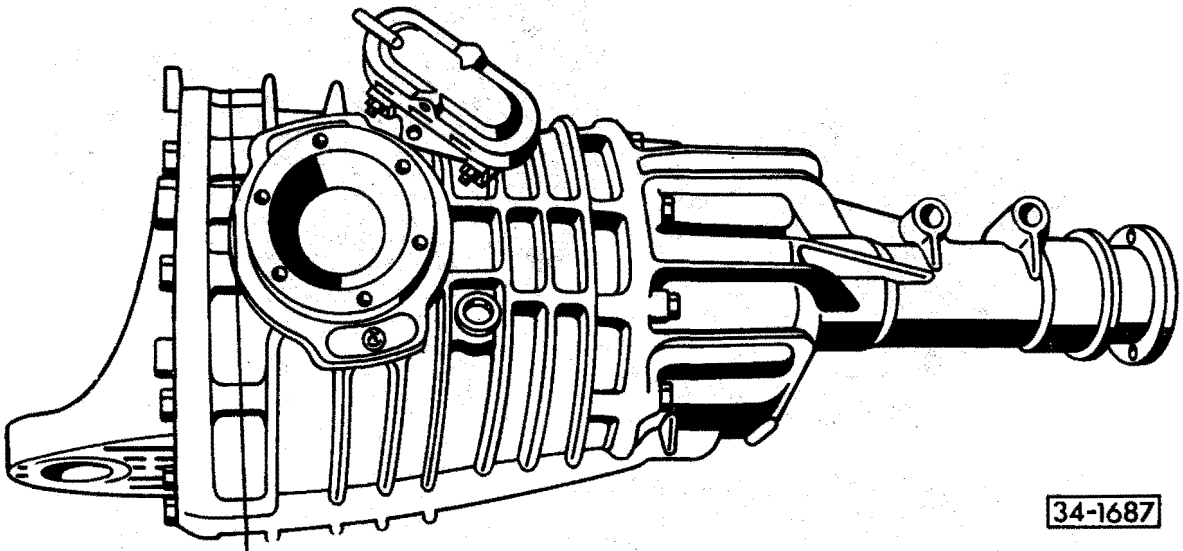

34-1687

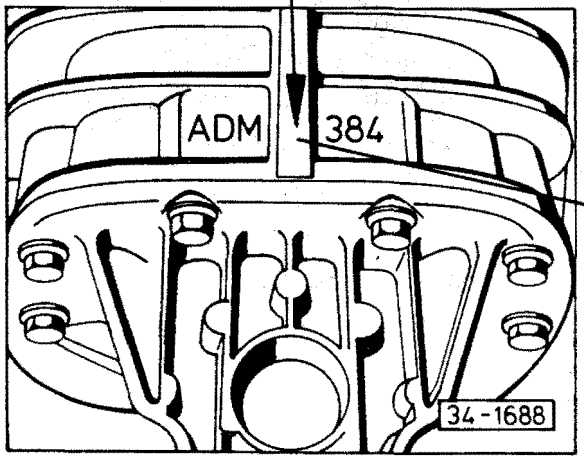

Front final drive code letters and date of manufacture

Example: ADM (Code letters) 384 (Manufacturer's consecutive no.)

Automatic Transmission Type 090

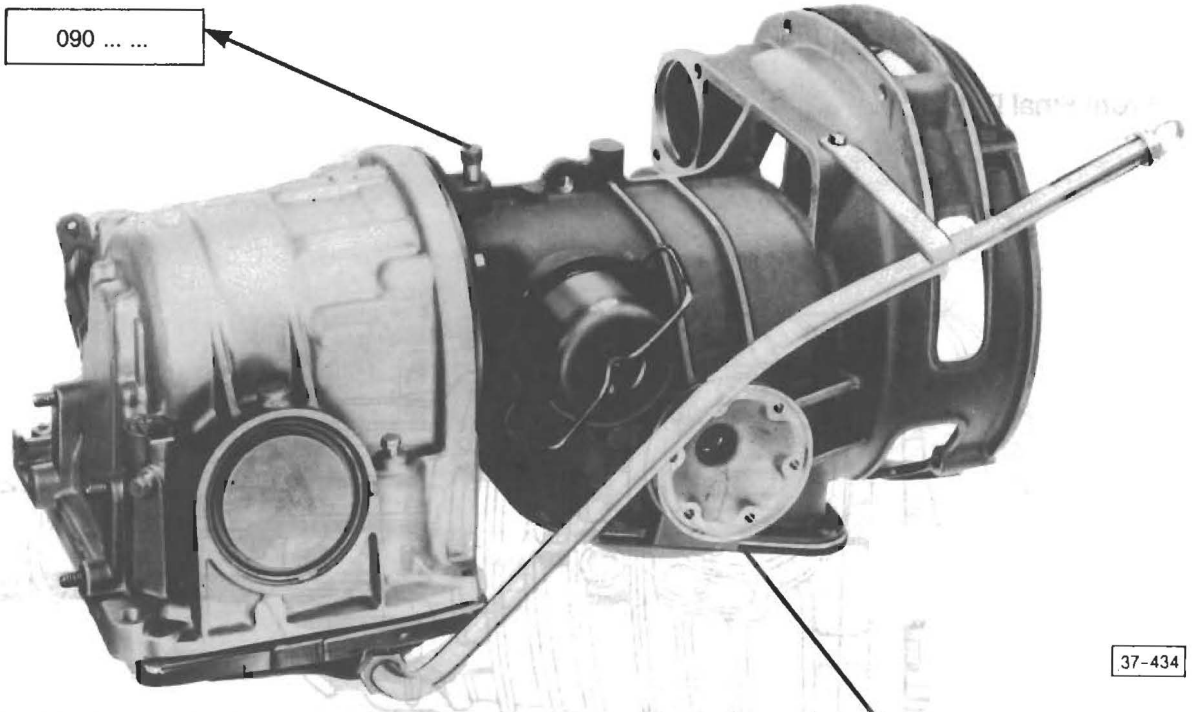

Code letters and date of manufacture

Example NG 15 08 9

NG = code letters
15 = day of manufacture
08 = month
9 = year (79)

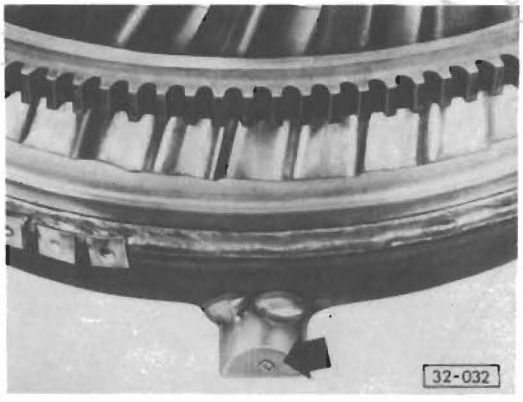

Converter code letter

- letter **D** or **Z** on lug (arrow)

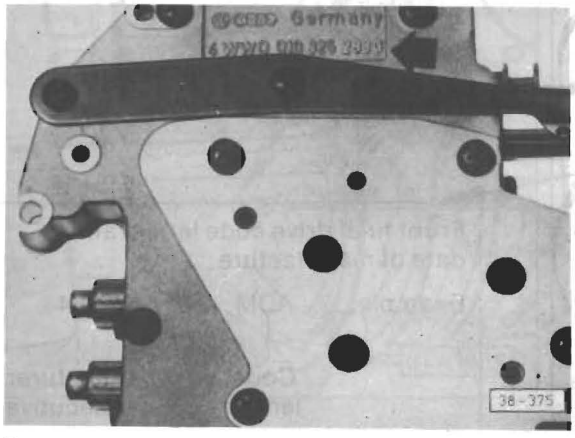

Transfer plate identification

- part number (arrow)

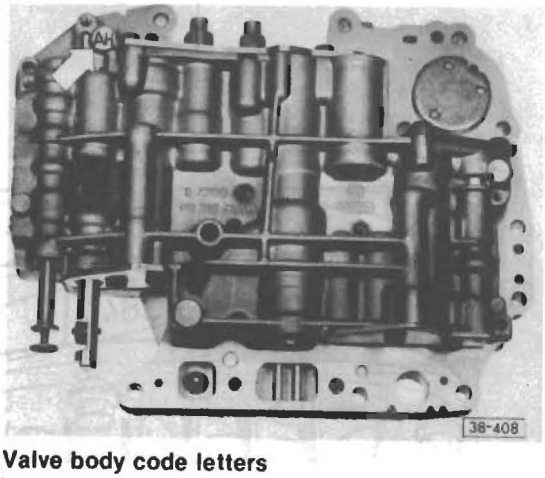

Valve body code letters

- on boss (arrow)

Lifting vehicle with hoist/floor jack

CAUTION

Before driving onto lift, check for clearance between lifting arms and tires to avoid cutting sidewalls.
Extend arms and check to see if arms are long enough to contact lifting points.
Lift only at points shown

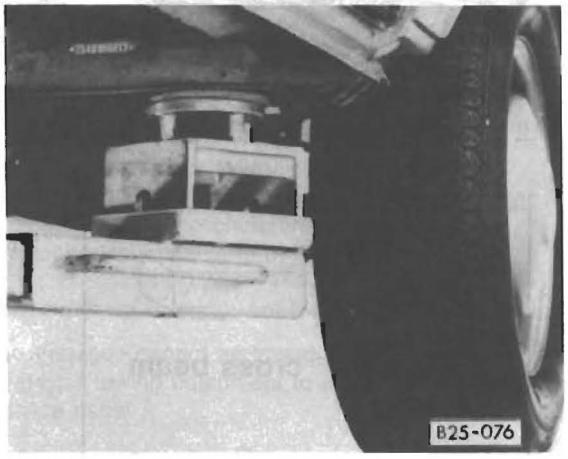

Front

at crossmember next to jacking port

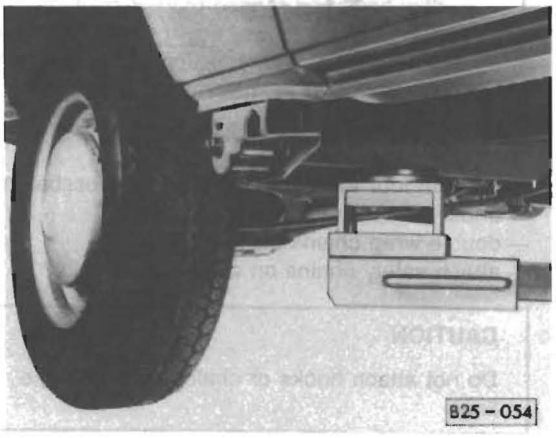

Rear

at rear crossmember

Note

When lifting vehicle with floor jack, use same lifting points as with hoist

CAUTION

Do not lift vehicle by engine, transmission or front suspension. Doing so may result in damage to components

Emergency Towing

Note

All towing procedures are based on use of typical sling-type tow truck equipment. If other types of towing equipment are used, these procedures may not apply

- whenever possible, tow with rear wheels off ground
- if car with **automatic transmission** must be towed with front wheels lifted because of extensive damage, dollies should be used under rear wheels if towing speed will exceed 30 mph or distance over 30 miles. Exceeding these limits will damage transmission
- selector lever must be in "**N**" position when moving car with automatic transmission with rear wheels on ground

WARNING

Always secure front wheels with an external steering wheel lock when towing with rear wheels off ground.
Never use ignition steering lock to secure front wheels.
Never allow passengers to ride in towed vehicle

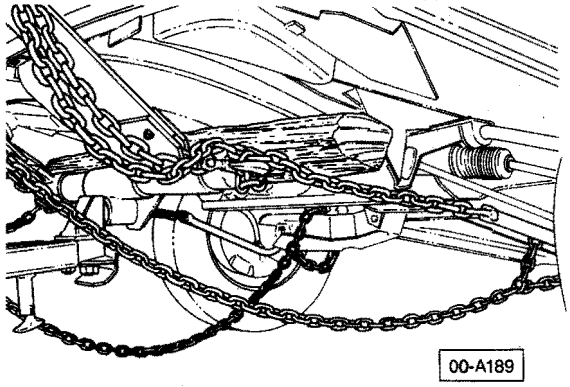

00-A189

Front hook-up — all models thru 1985

— attach grab hooks under lower control arms outboard of shock absorber mounts (as shown)
— place 4x4 wooden crossbeam under spare tire
— place tow bar under 4x4
— double wrap chains on tow bar
— attach safety chains to lower control arms (as shown)

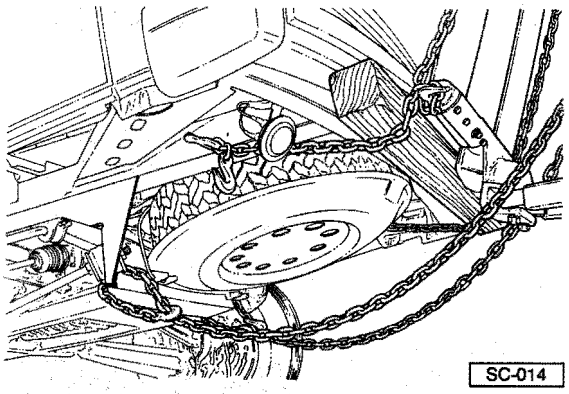

SC-014

Front hook-up—From 1986 m.y.

— remove front license plate/bracket if interfere with front hook-up

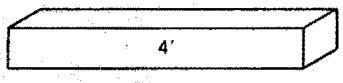

4 x 4 x 48'' cross beam



T-hooks

00-A294

— attach T-hooks (above) to tie down slots in long members (as shown)
— position four foot long 4x4 wooden crossbeam under bumper (as shown)
— double wrap chains on tow bar
— attach safety chains on axle platform

CAUTION

Do not attach hooks or chains around brake lines

— raise vehicle to allow four inches clearance between tires and road

Towing speed/distance

Front tow — all models EXCEPT Syncro

Automatic transmission
30 mph (48 kmh) for up to 30 miles (48 km)

Manual transmission
50 mph (80 kmh) for up to 50 miles (80 km)

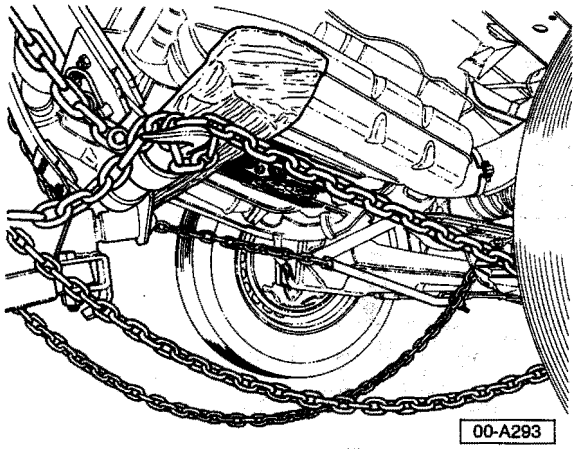

Rear hook-up — air cooled gasoline models only

— attach grab hooks to trailing arms
— place 4x4 under engine carrier to space tow bar away from heat exchangers
— attach safety chains to trailing arms

Rear hook-up — water-cooled/diesel models

The Vanagon cannot be towed with conventional sling-type towing equipment to avoid damage to valance panel.

Vanagon Syncro

Front/rear hook-up

The Vanagon Syncro cannot be towed with conventional sling-type towing equipment nor with wheel lift equipment or wheel dollies to avoid damage to the all-wheel drive system.

— use flat-bed tow truck only.

Flat Towing

Vehicles with **automatic transmission** may be towed forward (in driving direction) at speeds up to 30 mph for maximum of 30 miles

CAUTION

Towing vehicles at more than 30 mph and/or for distance greater than 30 miles with rear wheels on ground will damage automatic transmission due to lack of lubrication

If towing speed will be greater than 30 mph or distance greater than 30 miles, temporary modifications to vehicle are required as follows:

Work sequence

— remove drive shaft assemblies
— seal drive shaft flanges against water and dirt
— wrap drive shafts and store in vehicle

Manual transmission (including Syncro)

There are no restrictions on speed or distance when towing manual transmission cars behind other vehicles

Engine code letters		CV
Distributor (Part No.)		022 905 205S
Ignition timing		7.5° BTDC
Timing mark location: crankshaft pulley		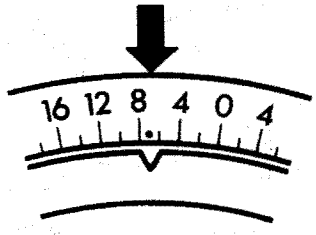 28-050
Idle speed manual automatic Vacuum hose disconnected		 800- 950 rpm 850-1000 rpm
Dwell angle	new points wear limit	44-50° 42-58°
Centrifugal advance (crankshaft degrees)	start	1000-1200 rpm
		9-14° at 1600 rpm
	end	21-25° at 3400 rpm
Vacuum advance	start	107-147 mbar (80-110 mm Hg)
	end	266 mbar (200 mm Hg) 8-12°
Spark plugs	Bosch Beru Champion	W 145 M2. W 8 CO 145/14/3L N 288
Spark plug tightening torque		30 Nm (22 ft lb)
Spark plug gap		0.6-0.7 mm (0.023-0.028 in.)
Firing order		1—4—3—2

Engine code letters		CV
Distributor (Part No.)		039 905 205C
Ignition timing		5° ATDC
Timing mark location: crankshaft pulley		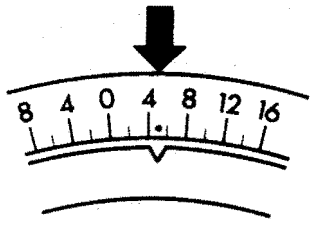 28-071
Idle adjustment Vacuum hoses connected Idle stabilizer plugs removed and connected together		850–950 rpm
Dwell angle setting		not adjustable
Centrifugal advance (crankshaft degrees)	start	1050–1300 rpm
		9–13° at 1600 rpm
	end	21–25° at 3400 rpm
Vacuum advance	start	90–160 mbar (70–120 mm Hg)
	end	240–280 mbar (180–210 mm Hg) 9–12°
Vacuum retard	start	90–160 mbar (70–120 mm Hg)
	end	200–280 mbar (150–210 mm Hg) 11–13°
Spark plugs	Bosch Beru Champion	W 145 M2, W 8 CO 145/14/3L N 288
Spark plug gap		0.6–0.7 mm (0.023–0.028 in.)
Spark plug tightening torque		30 Nm (22 ft lb)
Firing order		1—4—3—2

Transistorized ignition system cautions

Do not connect any condenser/suppressor or test light to terminal 1. Do not connect test instruments with a 12 volt supply on terminal 15 of ignition coil. Do not crank engine before high tension wire of distributor cap (terminal 4) is connected to ground with jumper wire (example: compression check etc.). Do not replace installed coil—211 905 115 C—with conventional type. Do not leave battery connected when electric welding on car. Do not start engine after heating up to more than 80°C (176°F), example: paint drying booth. Do not wash engine when it is running. Do not use battery booster longer than 15 sec. nor exceed 16.5 volts with booster. Allow 1 minute pause between boosting attempts. Do not disconnect battery while engine is running. Disconnect plug to ignition control unit when car has to be towed.

General

Engine code letters		DH
Distributor (Part No.)		025 905 205 D
Ignition timing		5 ± 1° ATDC
Timing mark location: crankshaft pulley		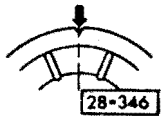
Idle speed Vacuum hoses connected		850 ± 50 rpm
Idle stabilizer control unit		electrical plugs disconnected from unit and connected together
Centrifugal advance (crankshaft degrees)	start	1050–1150 rpm
		16–20° at 2400 rpm
	end	21–25° at 3800 rpm
Vacuum advance	start	190–230 mbar (14.0–17.0 cm Hg)
	end	360 mbar (27.0 cm Hg) 12–16°
Vacuum retard	start	100–220 mbar (7.5–16.5 cm Hg)
	end	260–360 mbar (19.5–27.0 cm Hg) 9–11°
Spark plugs	Bosch Beru Champion	W 7 C 0 14 L-7 C N 288
Spark plug gap		0.7 + 0.1 mm (0.028 + 0.004 in.)
Spark plug tightening torque		20 Nm (14 ft lb)
Firing order		1—4—3—2

Index

Engine (Air-cooled AFC)
— Removing 10.2
— Installing 10.5

Engine (Diesel)
— Removing 10.6
— Installing 10.7

Engine (Water-cooled Syncro)
— Removing 10.8
— Installing 10.10

Engine, removing
(Air cooled-AFC)

Work sequence

— disconnect ground cable from battery

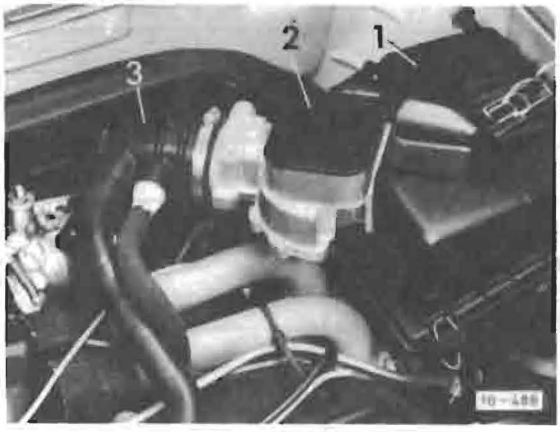

— detach air cleaner **1** with air flow sensor **2** and air intake duct **3**

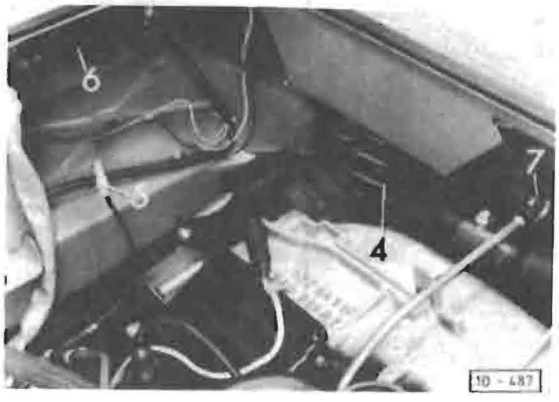

— remove rubber boot for heater booster **4**
— disconnect wire for alternator **5**
— disconnect plug **6** at control unit
— pull engine oil level dip stick **7**

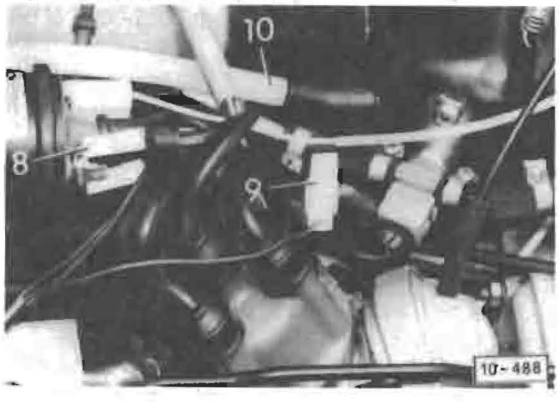

— disconnect wires at
  • ignition distributor **8**
  • engine oil pressure switch **9**
— disconnect vacuum hose **10** for brake booster

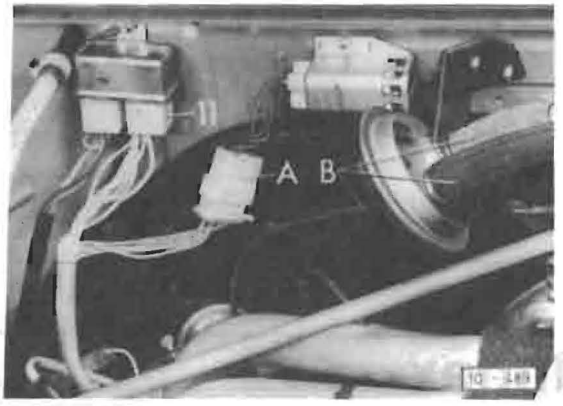

— disconnect following
  • plug **11** at double-relay
  • plug **A** for resistors
  • hoses **B** at deceleration valve

California only

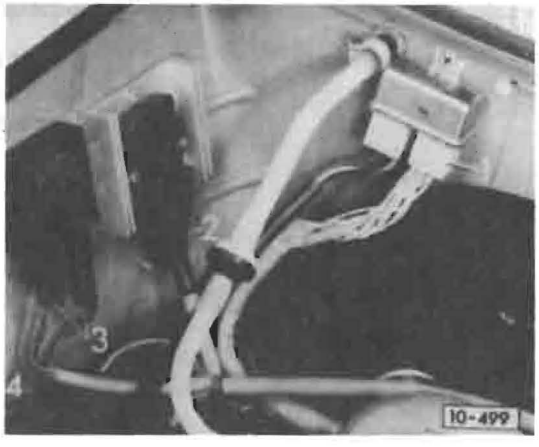

— disconnect following:
  • plug **1** at double-relay
  • plug **2** at Hall control unit
  • plugs **3** at idle stabilizer
  • wire connection **4** for oxygen sensor

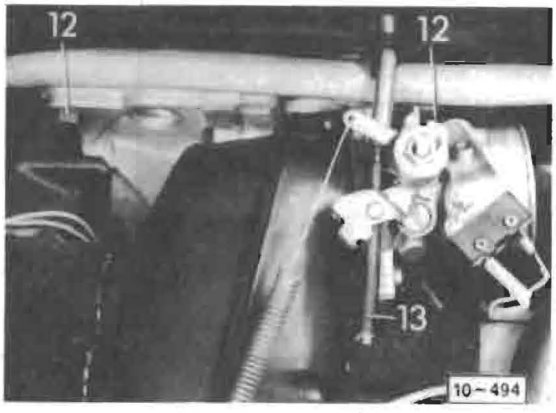

— remove nuts **12** of upper engine mounting bolts
— disconnect accelerator cable **13**

Automatic transmission

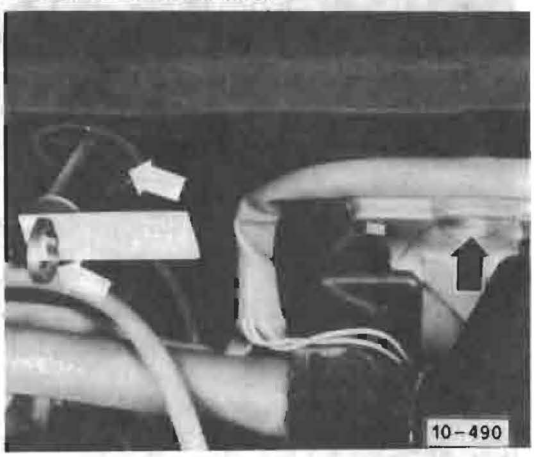

— remove plug (black arrow) on top of transmission housing
— pull ATF dip stick (lower white arrow)
— remove ATF filler tube grommet (upper white arrow)

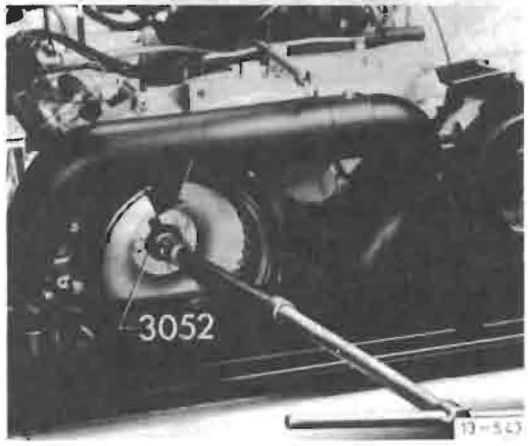

— remove three 8 mm bolts of torque converter through hole on top of transmission housing
  • use adaptor 3052, extension and T-handle to turn crankshaft of engine
  • make sure pin (arrow) engages in recess of cooling fan hub

Note

To gain access to bolts of torque converter, engine must be rotated until each bolt appears in hole on top of transmission housing



— remove heater flap housing bolt **14**

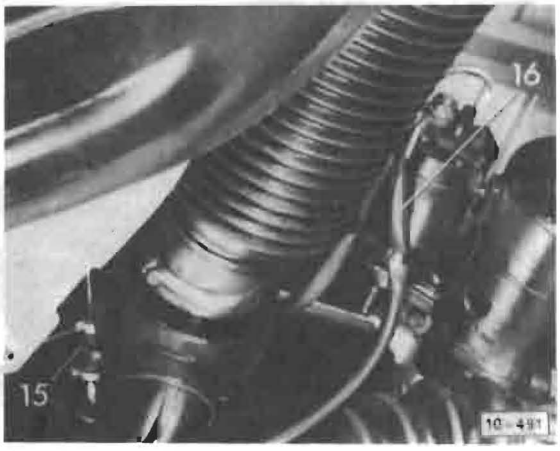

— block fuel line **15** with clamp
— disconnect wiring **16** on starter

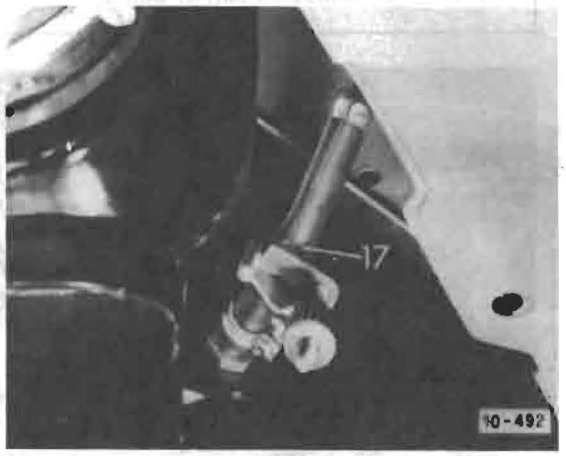

— block fuel line from pressure regulator **17** with clamp

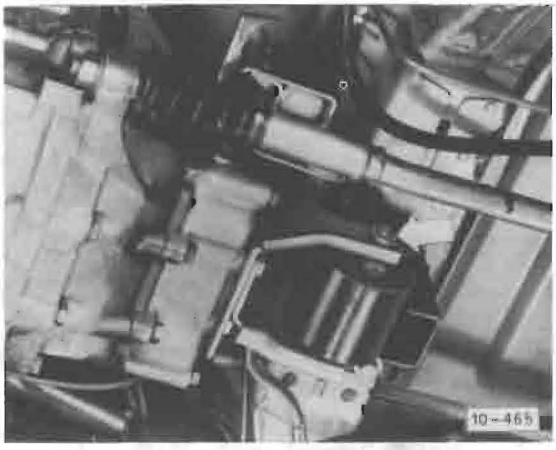

— loosen transmission mount bolt (arrow)

Automatic transmission

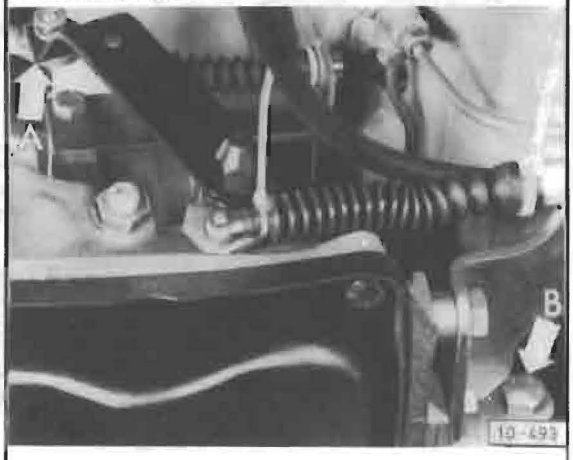

— loosen accelerator cable **A** at selector lever and detach
— loosen transmission carrier bolt **B**

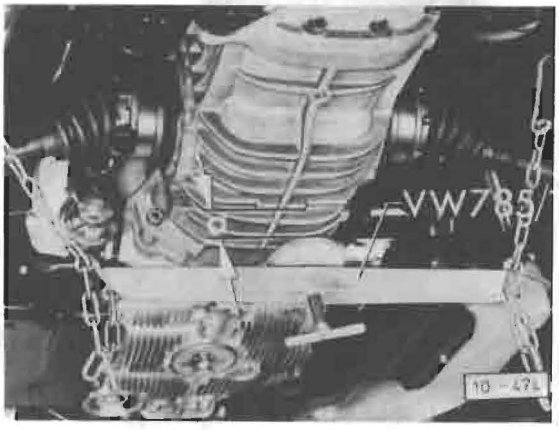

— support transmission with VW 785/1
  • when attaching keep distance
  a = 80 mm (3 1/4 in.)
— support engine with floor jack
  • use adaptor VW 612/5

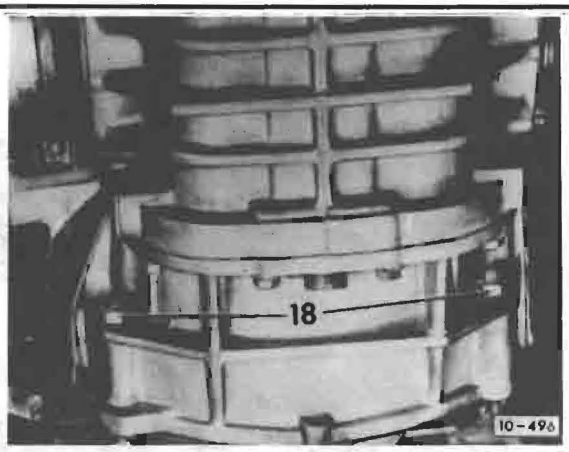

— remove nuts **18** from engine mounting bolts

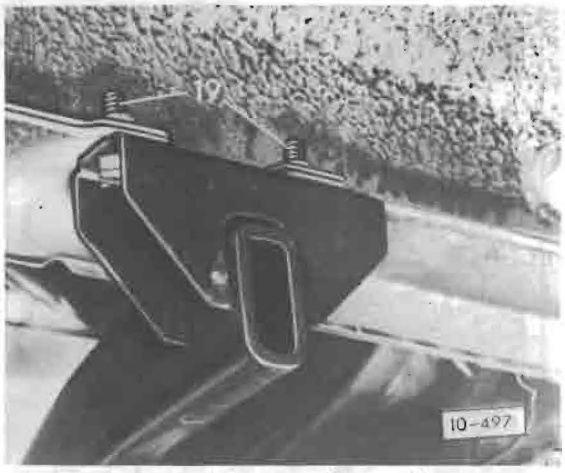

— remove bolts **19** from engine carrier
— lower engine/transmission assembly until transmission rests on support VW 785/1
— remove engine from transmission
— lower engine with floor jack

Engine, installing
(Air cooled-AFC)

Proceed in reverse order of removing and note following:

— check clutch release bearing for wear, replace if necessary
— lightly lubricate splines on main drive shaft and contact points of clutch release bearing/ clutch release lever with MoS_2 grease
  • do not lubricate clutch release bearing guide sleeve
— always replace all self-locking nuts

Manual transmission

— adjust accelerator cable at full throttle position

Automatic transmission

— adjust accelerator cable

Tightening torques:

• engine to transmission	30 Nm (22 ft lb)
• engine carrier to mount	25 Nm (18 ft lb)
• transmission mount	30 Nm (22 ft lb)
• torque converter to drive plate	30 Nm (18 ft lb)

Engine, removing

CAUTION

Coolant/antifreeze **must not** be reused when replacing engine, cylinder head, cylinder head gasket, radiator and heater core.

—disconnect battery ground cable
—remove top of air cleaner
—remove lower engine cover
—open coolant expansion tank cap

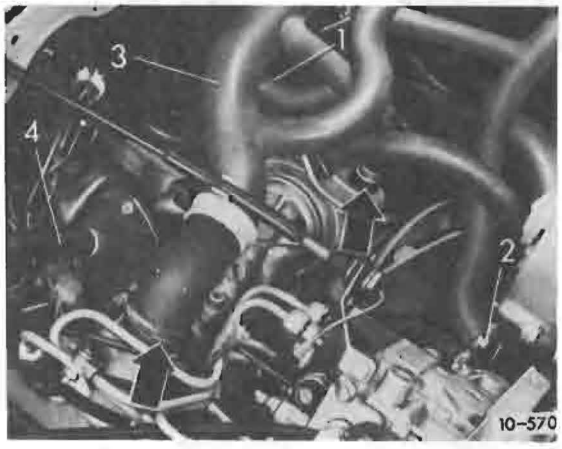

—disconnect lower hose from waterpump at connecting pipe **1** to radiator (see caution)
—disconnect center hose **2** from waterpump
—disconnect hose **3** from cylinder head (lower arrow) and from oil cooler (upper arrow) and move it to one side
—remove vacuum hose **4** from vacuum pump

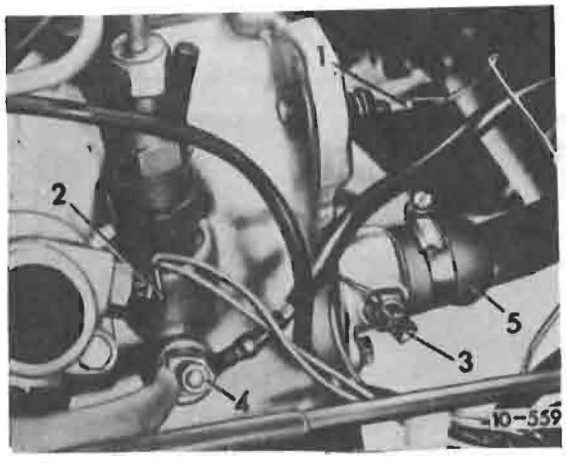

—disconnect wiring from:
- oil pressure switch **1**
- temperature sensors **2** and **3**
- glow plugs **4**

—remove coolant hose **5**

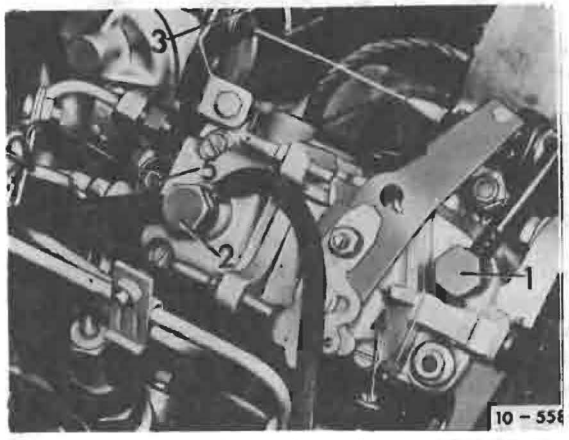

—remove fuel supply line **1** and fuel return line **2** from injection pump
—disconnect accelerator cable from pump lever and remove retaining clip **3** at bracket and place cable to one side
—disconnect cold start cable at lockscrew **4**

—remove retaining clip at bracket and place cold start cable to one side
—disconnect wire **5** from fuel shut-off solenoid

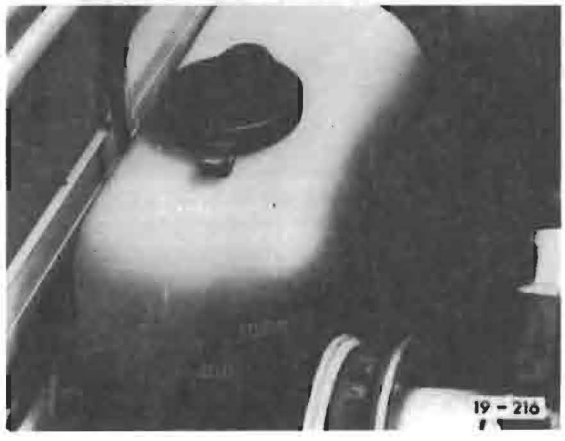

—remove coolant reservoir

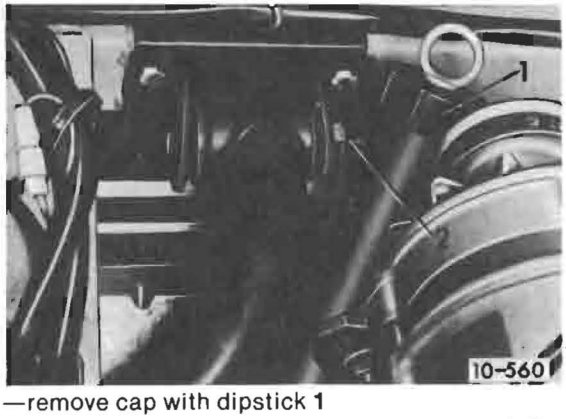

—remove cap with dipstick **1**
—remove nuts **2** from rear engine mounts on left and right sides, but leave bolts in

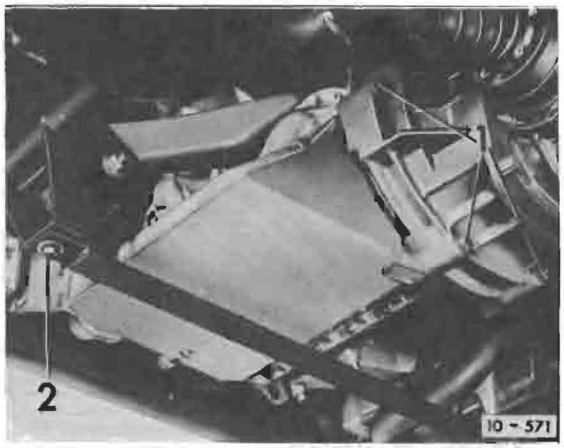

—remove all 7 engine/transmission mounting bolts **1**
—remove support member bolts **2** and remove support member

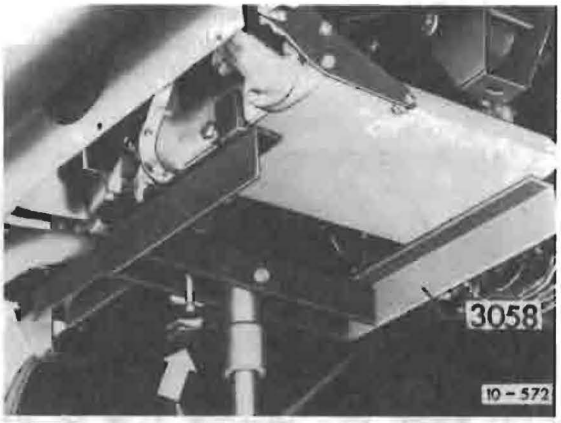

—support engine with engine crane and adaptor 3058
• angle of engine to transmission can be adjusted by turning knob (arrow)

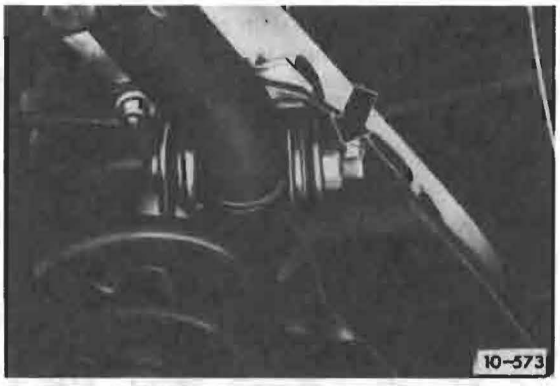

—remove nuts (arrow) from front engine mounts on left and right sides
—remove bolts from both front and rear engine mounts
—lower engine/transmission assembly until engine can be separated from transmission

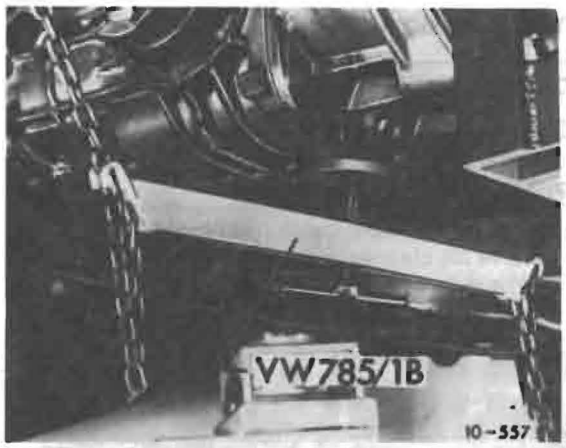

—support transmission with VW 785/1B
—remove engine from transmission and lower it out of vehicle

Engine, installing

Proceed in reverse order of removing and note following:

—adjust angle of engine to transmission before joining engine and transmission

CAUTION

Do not interchange fuel supply and fuel return pipe union screws. For identification, fuel return pipe union screw is marked with **OUT** on hex. head. Fuel return line also has smaller diameter than fuel supply line

—adjust cold start cable, see Repair Group 23
—refill coolant, see Repair Group 19

Tightening torques:

• engine to transmission	
M10 bolts	45 Nm (33 ft lb)
M12 bolts	80 Nm (59 ft lb)
• engine mounts	85 Nm (63 ft lb)
• support member	45 Nm (33 ft lb)
• fuel line union screws on injection pump	22 Nm (16 ft lb)

Engine, removing

CAUTION

Coolant/antifreeze **must not** be reused when replacing engine, cylinder head, cylinder head gasket, radiator and heater core.

— disconnect ground cable from battery
— remove air cleaner with air flow sensor and air intake duct

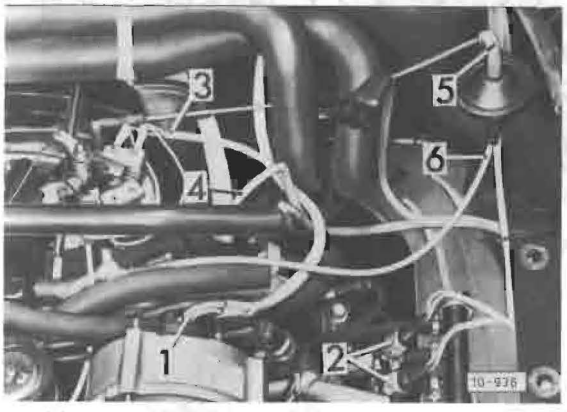

— disconnect wire **1** at alternator
— disconnect following:
- plugs **2** at injectors
- plug **3** at throttle valve switch
- plug **4** at auxiliary air regulator

— disconnect hoses **5** and **6** at charcoal filter valve

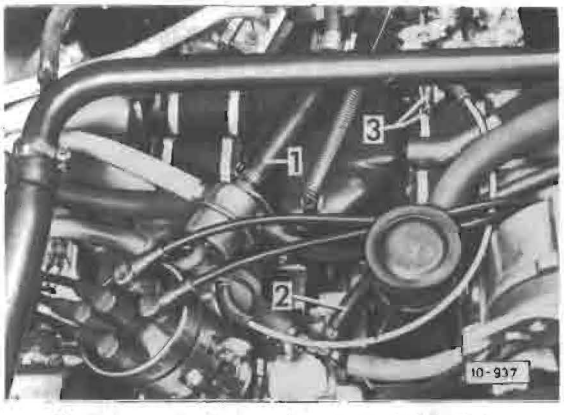

— disconnect and plug fuel hoses **1** and **2**
— remove accelerator cable from throttle valve lever

Automatic Transmission

— remove circlip and spring **3** from accelerator rod

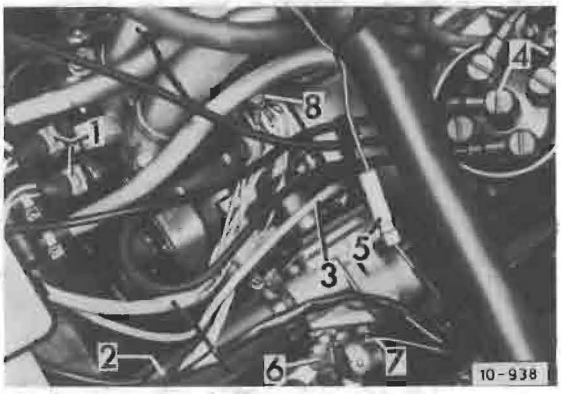

— disconnect following:
- plugs **1** at injectors
- plug **2** at oxygen sensor
- plug **3** and **4** at ignition distributor
- plug **5** at oil pressure switch
- plug **6** at temperature sensor
- plug **7** at temperature sender
- plug at coolant level warning switch (not shown—located in coolant expansion tank)

— remove ground connectors **8**

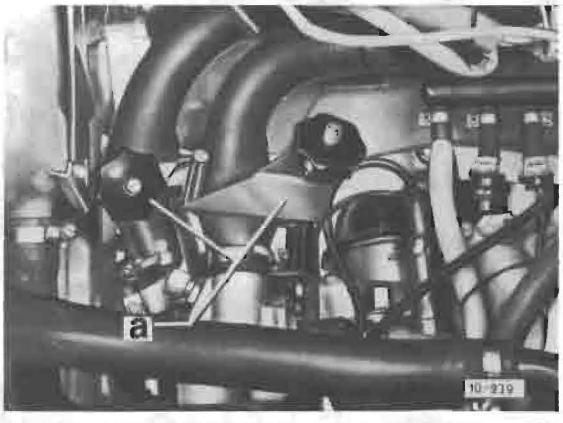

— block coolant hoses with clamps **a**
- **a** = univeral clamp—local supply

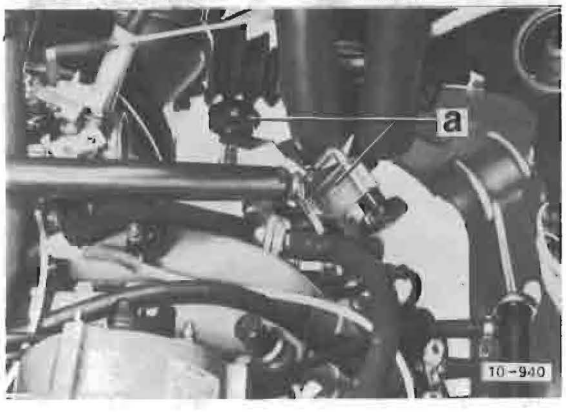

— block coolant hoses with clamps **a**
- **a** = universal clamp—local supply

— open coolant expansion tank cap

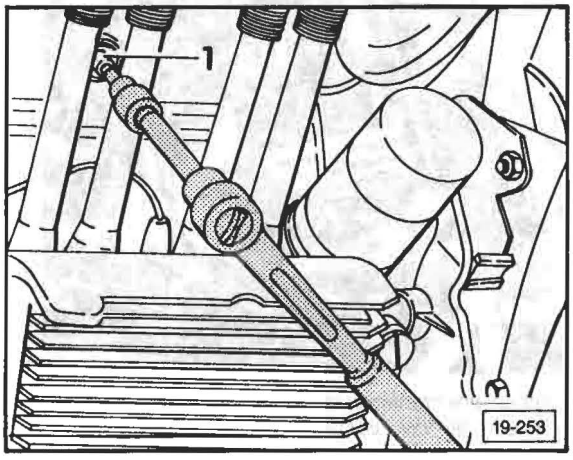

— remove drain plugs **1** at cylinder heads and drain coolant

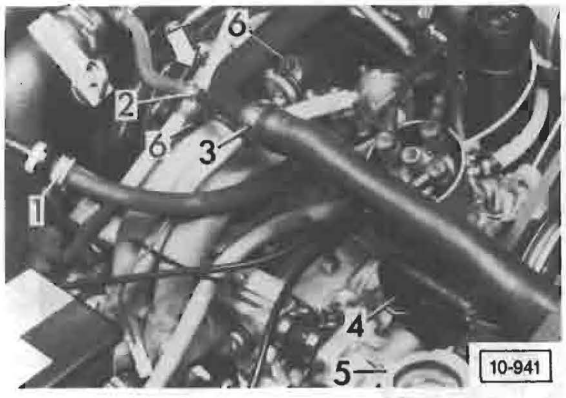

— disconnect brake booster line **1**
— disconnect coolant hoses **2, 3** and **4**
— remove coolant expansion tank **5**
— remove engine/transmission bolt/nut **6** on left and right sides

Automatic Transmission

— remove three bolts which attach torque converter to drive plate through hole on top of trans. housing (**arrow**)

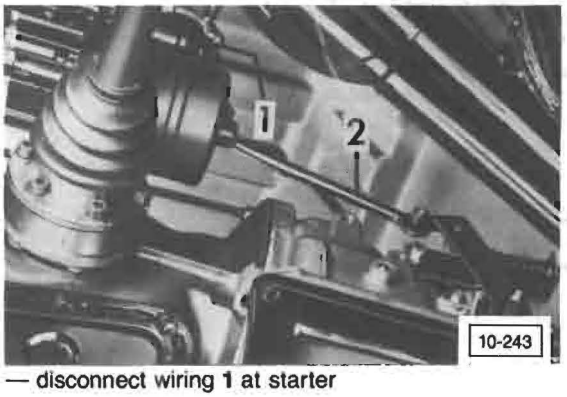

— disconnect wiring **1** at starter

Automatic Transmission

— remove accelerator rod **2**

Vehicles with power steering

— remove power steering pump with hose left attached, and place in engine compartment.

Vehicles with air conditioning

— remove compressor with hoses attached and place in engine compartment.

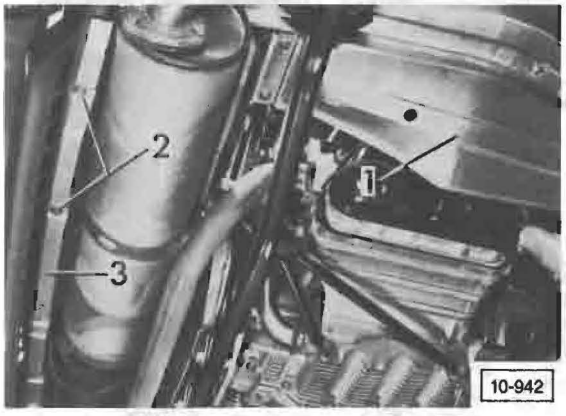

— remove plates **1** on left and right sides
— remove bolts, **2, do not** remove plate **3**

Syncro only

— remove rear skid plate under engine/transmission

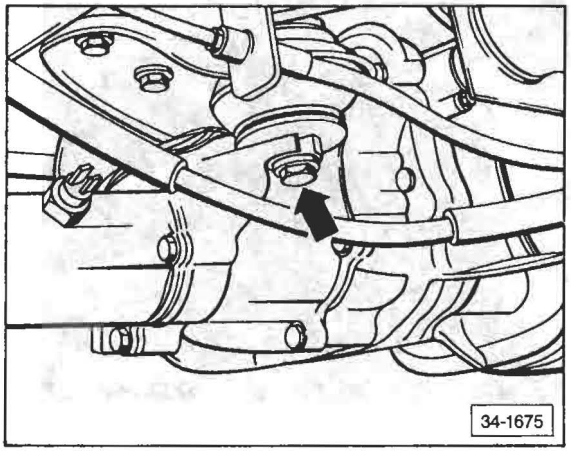

— loosen mounting bolts for front transmission bracket **three** turns (**arrow**)

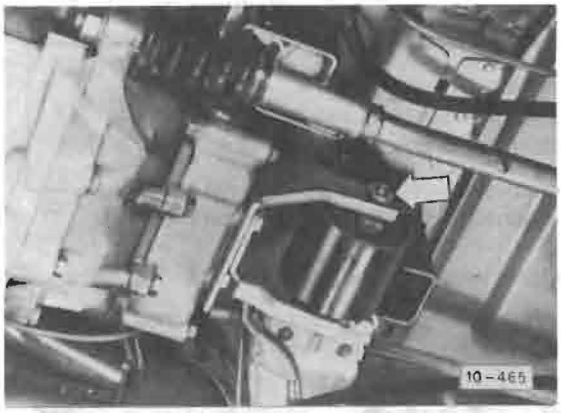

— loosen transmission mount bolt (arrow)

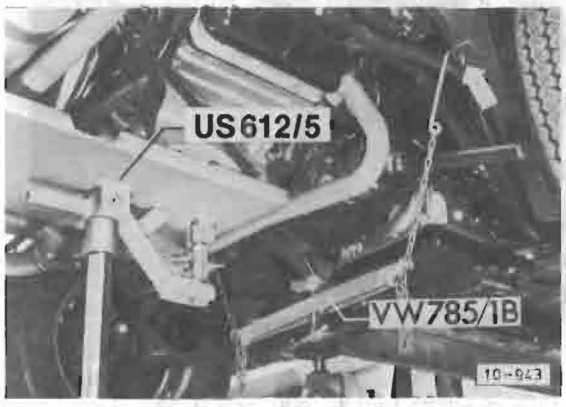

— attach VW 785/1B so that distance between support pad and transmission housing is about 120 mm (4 3/4 in.)
— support engine with US 612/5 and floor crane

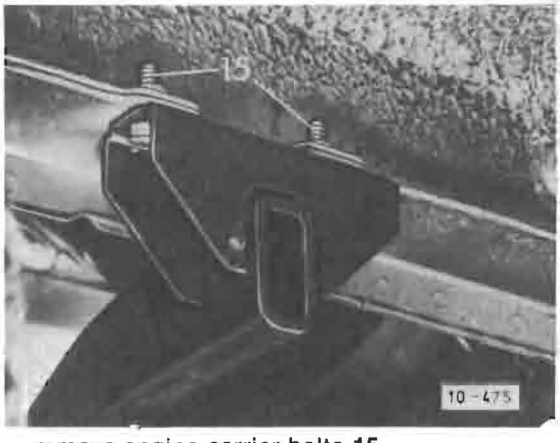

— remove engine carrier bolts **15**



— lower engine/transmission assembly until transmission rests on VW 785/1B
— when lowering, adjust angle of inclination on floor crane head and keep wiring harness aside so that it can pass oil filler tube
— remove nuts **2** of lower engine mounting bolts
— remove engine from transmission and lower it out of vehicle

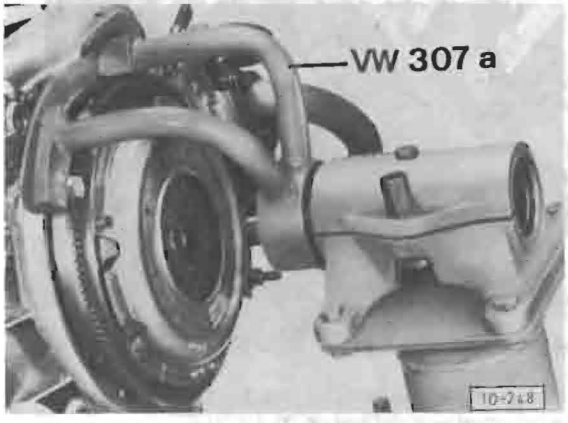

— mount engine on repair stand with engine holder VW 307a

Engine, installing

Proceed in reverse order of removing and note following:

— check clutch release bearing for wear and replace if necessary

Syncro only

— clean joining faces of engine and transmission and lightly coat joining surface of engine with silicone adhesive seal Part No. AMV 176 000 05
— lubricate clutch release bearing and main shaft splines lightly with MoS_2 grease (do not lubricate guide sleeve for release bearing)
— replace all self-locking nuts on engine mounts
— check and adjust, if necessary, accelerator cable/throttle controls, see Repair Group 20

Tightening torques:

• engine to transmission	30 Nm (22 ft lb)
• engine carrier to body	25 Nm (18 ft lb)
• transmission mounts	30 Nm (22 ft lb)
• torque converter to drive place	20 Nm (15 ft lb)

Introduction		October 1985
Engine code		MV
Part no.:	Ignition distributor	025 905 205 M
	Digifant control unit***	025 906 022D old 025 906 022/022A new
Ignition timing	Checking value	3° - 7° before TDC
	Adjusting value	5° ± 1° before TDC
Timing mark location		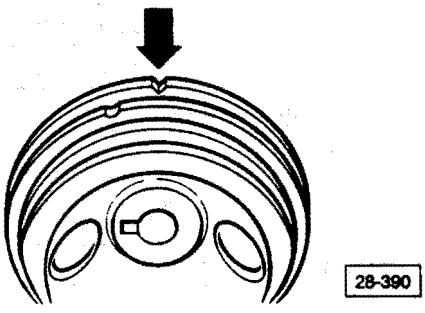 28-390
RPM*		2000 - 2500
Ignition adjustment** -- timing map --	RPM	Approx. 3000
	Degrees	35 ± 5°
RPM limit Switch-off RPM of digifant control unit	RPM	5600
Firing order	CYL.	1 - 4 - 3 - 2
Spark plugs (tightening torque: 20 Nm (14 ft lb)	Bosch Beru Champion	W 7 CCO 14L-7CU, 14L-7C N 288
Spark plug gap	mm (in)	0.7 ± .1 mm (0.028 ± 0.003 in)

*) Engine oil temperature 80° C, (176°F) connector of temperature sensor II disconnected with engine running.

**) Engine oil temperature 80°C, connector of temperature sensor II connected.

***) When replacing control unit always replace old control unit with newer version.

CAUTION

Part numbers are for reference only. Always check with your parts department for latest part information.

Technical data/specified values

Engine code		MV
Type		2.1 liter 70 kW, 90 SAE net HP
Introduction		October 1985
Part no. Control unit		025 906 022
Ignition timing	checking spec.	3-7° before TDC
	adjusting spec.	5 ± 1° before TDC
• Test and adjustment conditions	no.	1 and 9
Idle adjustment	idle rpm	880 ± 50 rpm
	CO content	0.7 ± 0.4 Vol. %
• Test and adjustment conditions	no.	1 to 6, 7, 8

Conditions and requirements:

1 — engine oil temperature min. 80°C (176°F)

2 — electrical consumers turned off

3 — crankcase breather hose on oil breather removed and closed tightly

4 — throttle valve switch turned on (continuity)

5 — idle stabilizer OK (valve vibrates and hums)

6 — ignition timing setting: OK

7 — connector (single connector) for idle stabilizer control valve disconnected

8 — with ignition OFF, disconnect connector (single connector) for oxygen sensor

9 — with engine running, double connector for temperature sender disconnected and rpm increased to 2000-2500 rpm by depressing throttle

Engine Crankshaft Crankcase

Index

Air-cooled
—Assembling
sheet metal 13.2
crankcase 13.6, 13.14
—Camshaft 13.14
—Carrier/Support 13.5
—Crankshaft
assembly 13.16
circlips 13.16
end play 13.10
oil seals 13.9
pilot bearing 13.17
—Cylinder 13.11
—Disassembling
sheet metal 13.2
crankcase 13.6
—Distributor
installing 13.9
drive shaft 13.8
drive gear 13.16
—Flywheel 13.9
—Pistons 13.11
—Piston rings 13.11
—Torque converter
drive plat 13.9

Diesel
—Camshaft drive belt 13.18
—Connecting rod 13.27
bearing clearance 13.30
bolts 13.30
side clearance 13.30
—Crankshaft 13.22
bearing caps 13.22
drive belt cover 13.21a
end play 13.24
journal sizes 13.23
main bearing clearance 13.25
oil seal (flywheel side) 13.25
oil seal (drive belt side) 13.26
sprocket bolt 13.21
—Cylinder block 13.27
bore dimensions 13.30
clearance 13.30
—Cylinder head gasket 13.19, 13.31
—Flywheel 13.23
—Intermediate plate 13.23
—Intermediate shaft oil seal 13.22
—Pilot bearing 13.22
—Piston 13.27
clearance 13.29
diameter 13.29
height 13.31
identification 13.31
marking 13.28
pin 13.28
rings 13.27
ring end gap 13.29
ring side clearance 13.29

Water-cooled /Syncro
–Assembling/disassembling 13.32, 13.34
–Camshaft 13.50
–Carrier/support 13.37a, 13.38
–Crankshaft
assembly 13.52
circlips 13.54
drive gear 13.54
end play 13.40
oil seals 13.39
pilot bearing 13.56
replacing (1.9L) 13.57, 13.58
–Cylinder 13.43
–Distributor
drive gear 13.38
drive shaft 13.38
installing 13.38
–Flywheel 13.40
–Piston pin hole burrs
removing 13.47
–Pistons 13.43
classifications 13.44
pin 13.44
rings 13.45
–Torque converter
drive plate 13.40
–V-belt pulley 13.34, 13.35, 13.42

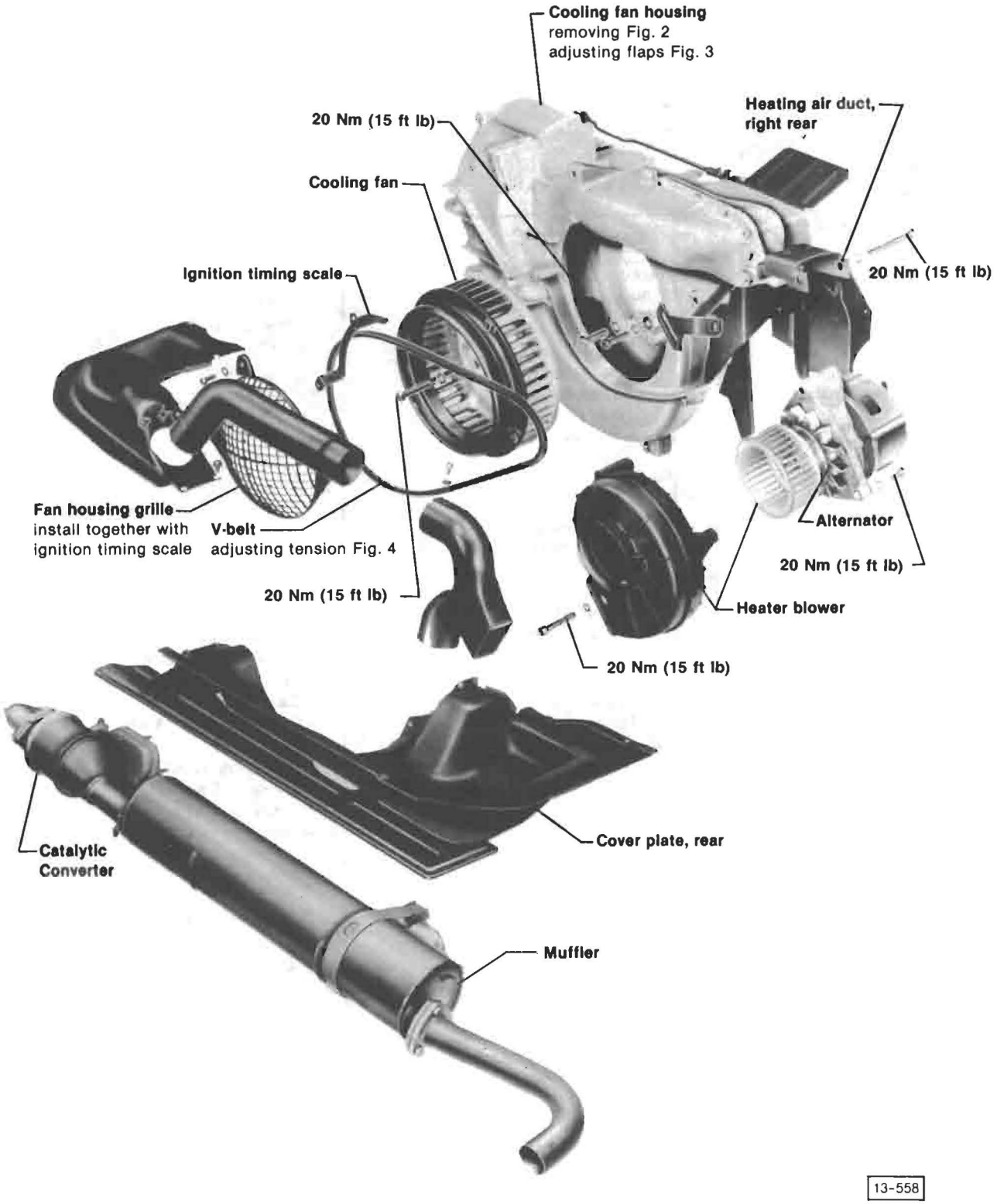
Cooling fan housing
removing Fig. 2
adjusting flaps Fig. 3
20 Nm (15 ft lb)
Heating air duct, right rear
Cooling fan
Ignition timing scale
20 Nm (15 ft lb)
Fan housing grille
install together with ignition timing scale
V-belt
adjusting tension Fig. 4
Alternator
20 Nm (15 ft lb)
20 Nm (15 ft lb)
Heater blower
20 Nm (15 ft lb)
Catalytic Converter
Cover plate, rear
Muffler
13-558

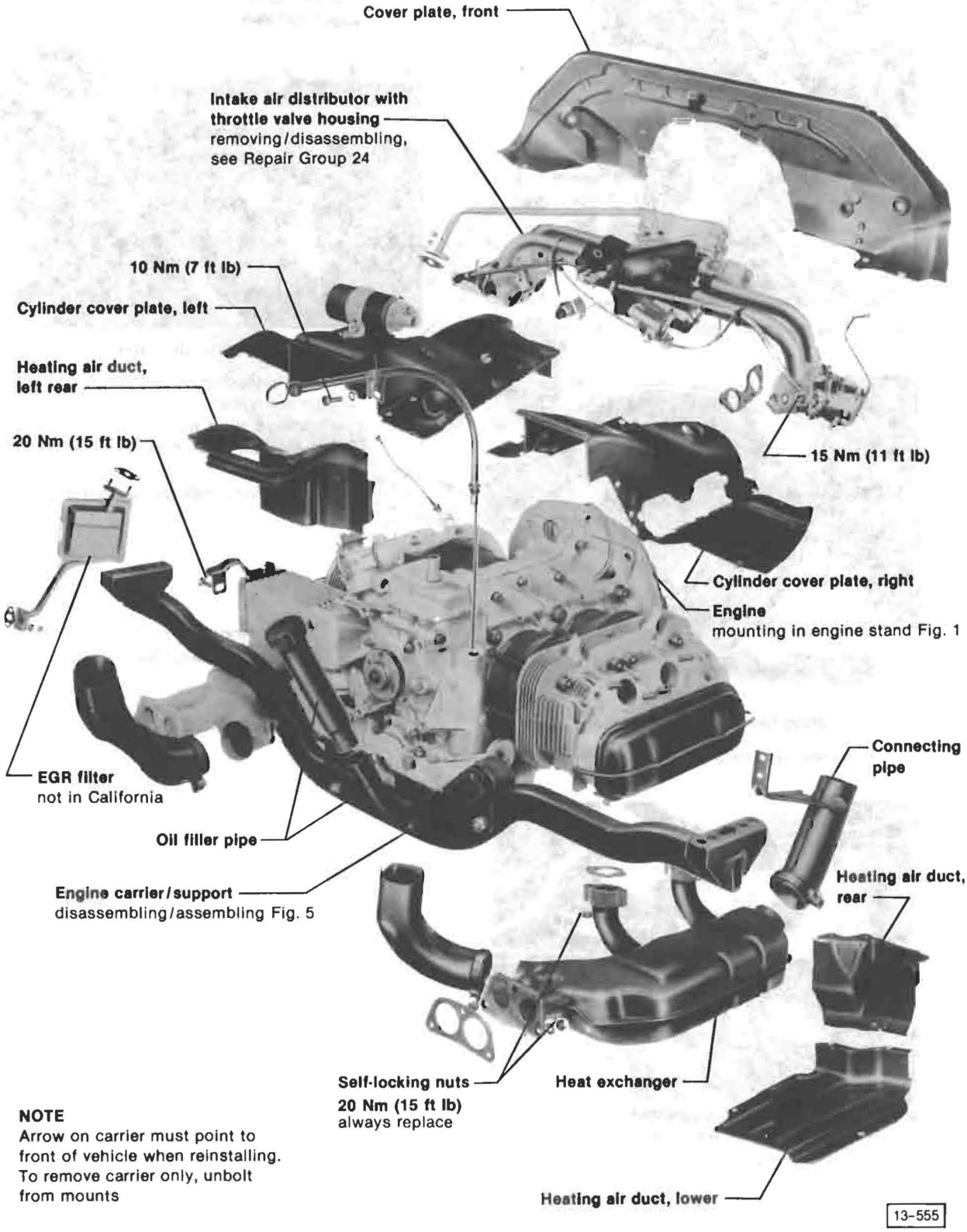

NOTE
Arrow on carrier must point to front of vehicle when reinstalling. To remove carrier only, unbolt from mounts

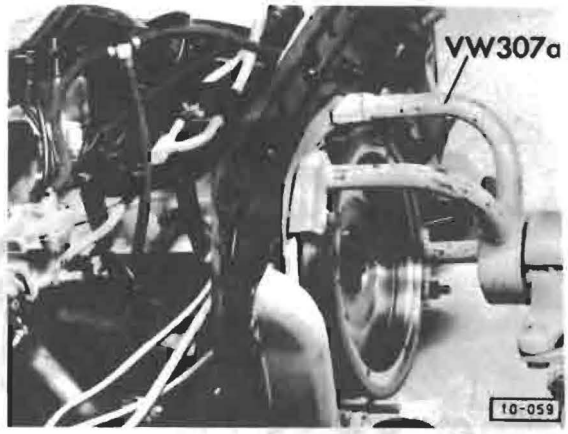

Fig. 1 Engine, mounting in engine stand

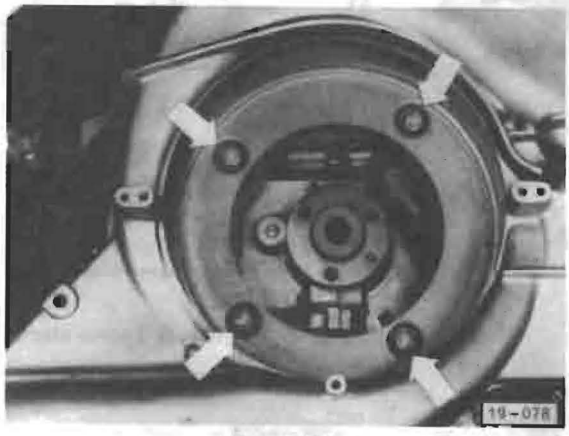

Fig. 2 Cooling fan housing, removing

— remove bolts (arrows) and detach

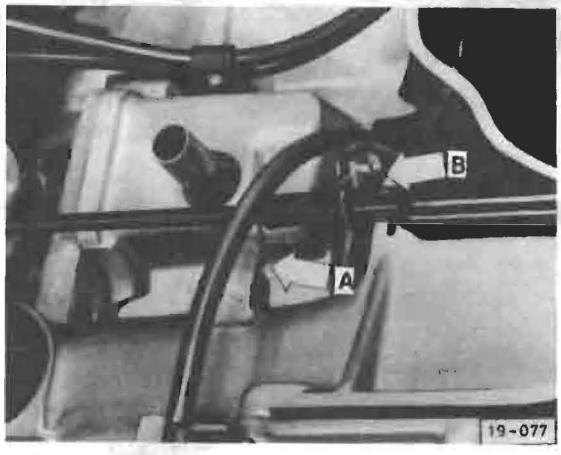

Fig. 3 Cooling air flaps, adjusting

- bent ends of return spring must rest on boss of cooling fan housing (arrow **A**) and on cable guide (arrow **B**)

— press flaps into closed position and tighten cable clamp

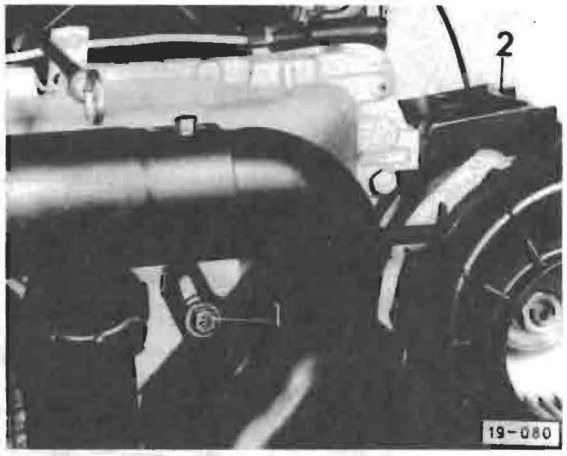

Fig. 4 Alternator V-belt, adjusting

— after loosening bolts **1** and **2**, move alternator to tension V-belt
— tighten bolts **1** and **2** to 20 Nm (15 ft lb)
— check belt tension by pressing belt firmly in center
- deflection: approx. 10–15 mm (3/8–9/16 in.)

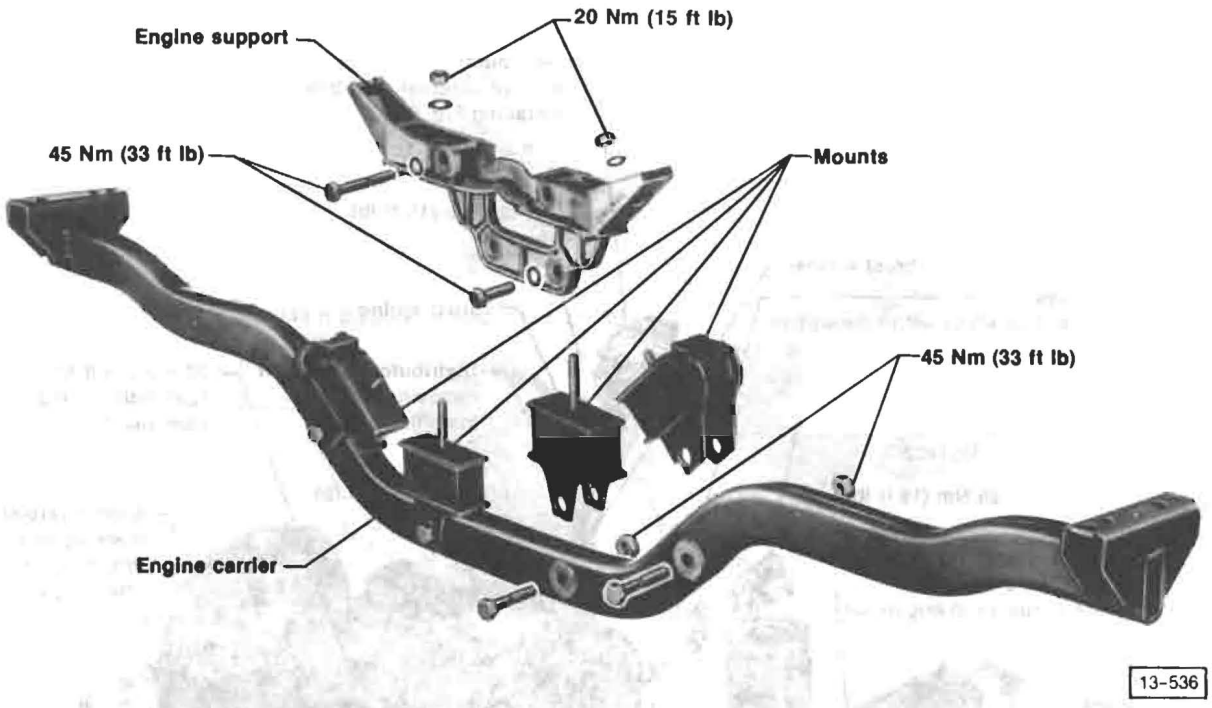

Fig. 5 Engine carrier/support, disassembling/assembling

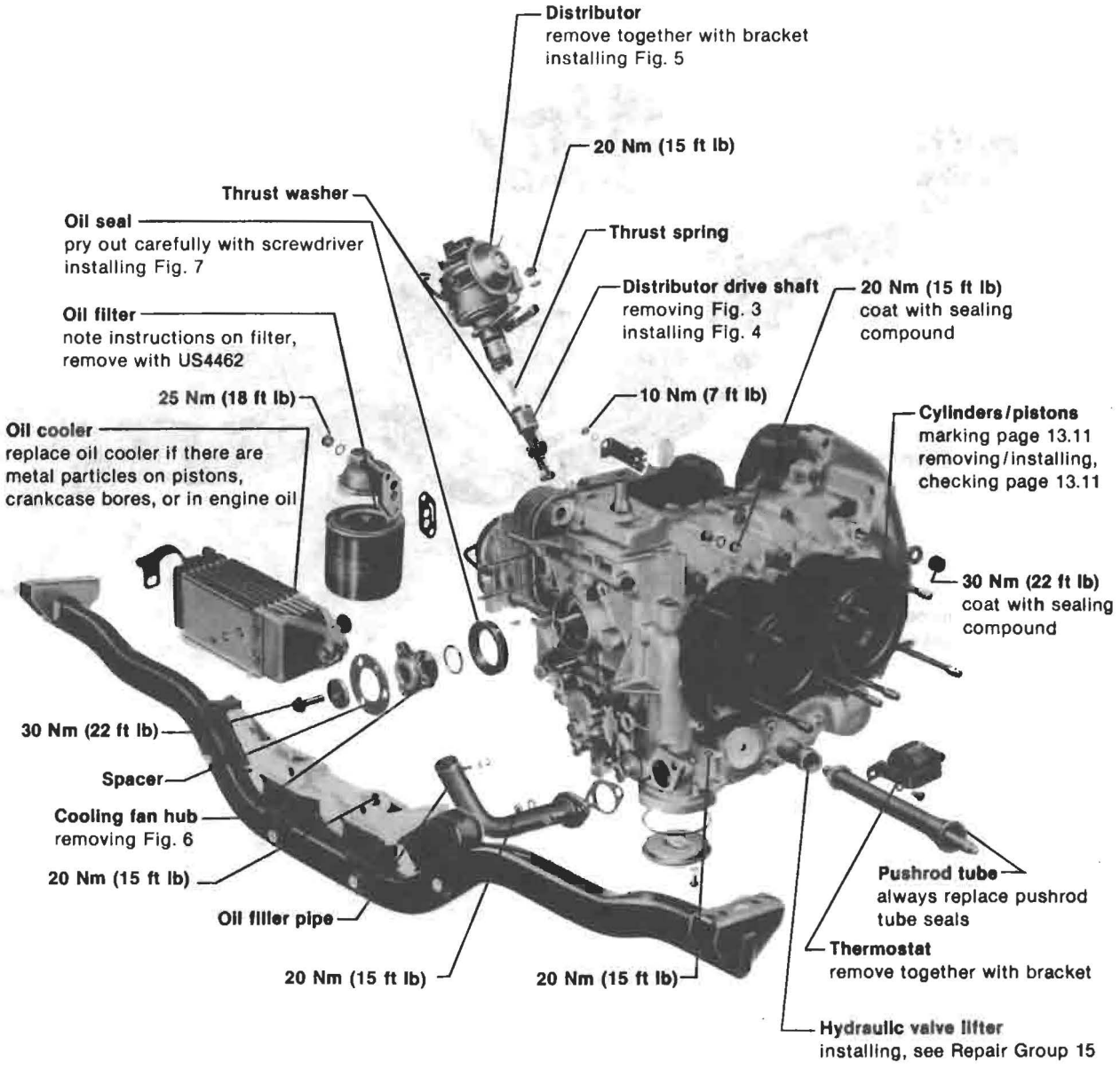
Distributor
remove together with bracket
installing Fig. 5
20 Nm (15 ft lb)
Thrust washer
Oil seal
pry out carefully with screwdriver
installing Fig. 7
Thrust spring
Distributor drive shaft
removing Fig. 3
installing Fig. 4
20 Nm (15 ft lb)
coat with sealing
compound
Oil filter
note instructions on filter,
remove with US4462
25 Nm (18 ft lb)
10 Nm (7 ft lb)
Oil cooler
replace oil cooler if there are
metal particles on pistons,
crankcase bores, or in engine oil
Cylinders/pistons
marking page 13.11
removing/installing,
checking page 13.11
30 Nm (22 ft lb)
coat with sealing
compound
30 Nm (22 ft lb)
Spacer
Cooling fan hub
removing Fig. 6
20 Nm (15 ft lb)
Oil filler pipe
20 Nm (15 ft lb)
20 Nm (15 ft lb)
Pushrod tube
always replace pushrod
tube seals
Thermostat
remove together with bracket
Hydraulic valve lifter
installing, see Repair Group 15
13-559

WARNING

Friction materials such as brake and clutch linings, or brake pads may contain asbestos fibers.

Do not create dust by grinding, sanding or by cleaning with compressed air.

Avoid breathing asbestos fibers and asbestos dust.

Breathing asbestos may result in serious diseases, such as asbestosis or cancer.

It may cause severe injury and death.

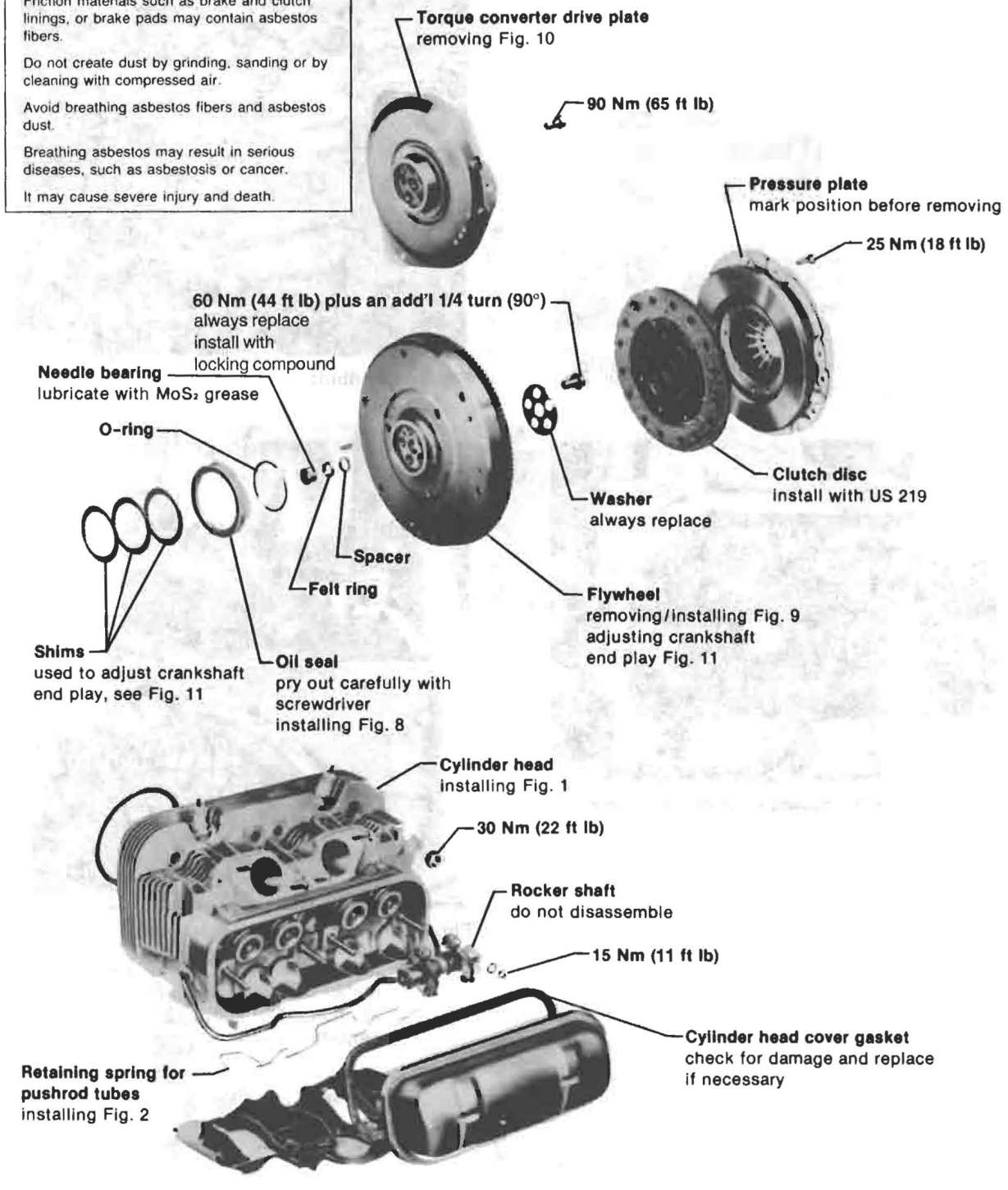

13-559

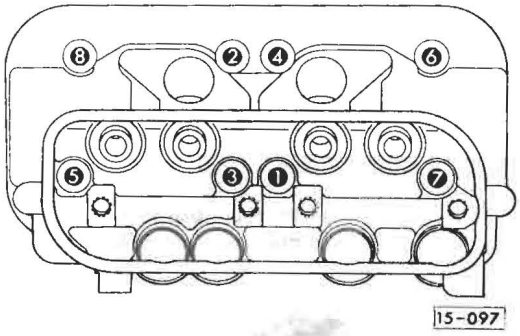

Fig. 1 Cylinder head, installing

— hand tighten nuts to align components, then torque to 30 Nm (22 ft lb) in sequence

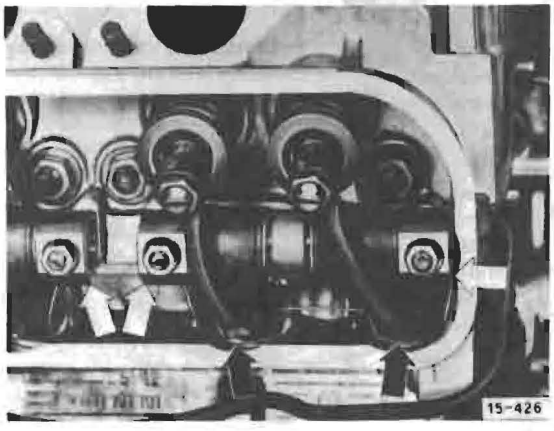

Fig. 2 Retaining spring for push rod tubes, installing

- spring must rest on tubes (black arrows) and engage supports (white arrows)

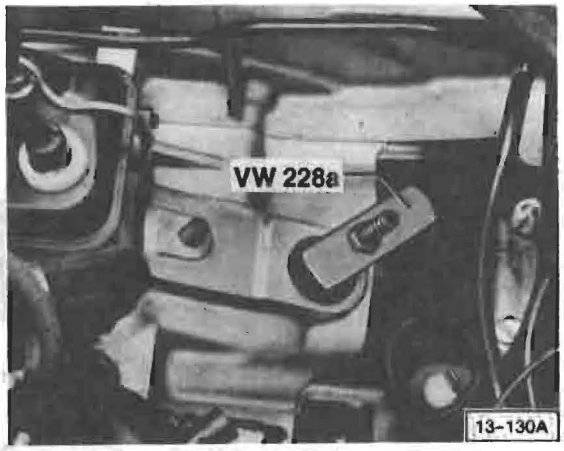

Fig. 3 Distributor drive, removing

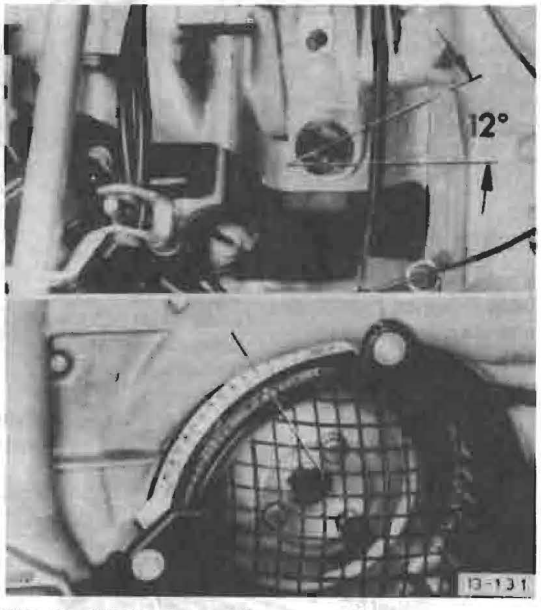

Fig. 4 Distributor drive, installing

— set crankshaft to TDC on cylinder No. 1
— install drive shaft so that offset slot is at an angle of about 12° to engine centerline (small segment to coil side)

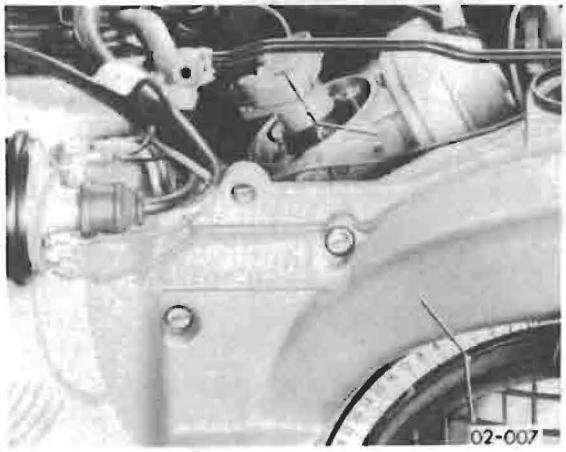

Fig. 5 Distributor, installing

— set cylinder No. 1 to TDC
— turn rotor until mark on rotor is in line with mark on distributor housing (cylinder No. 1)

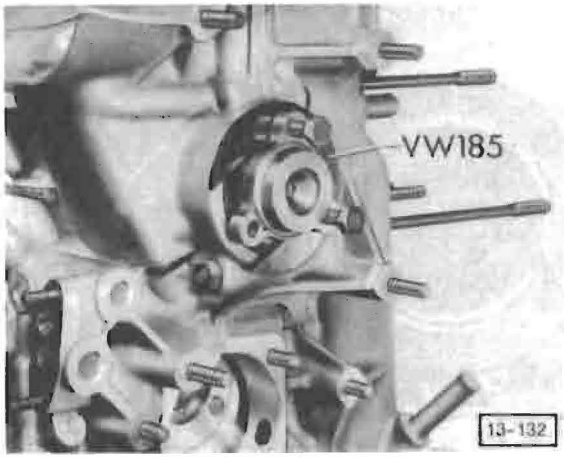

Fig. 6 Cooling fan hub, removing

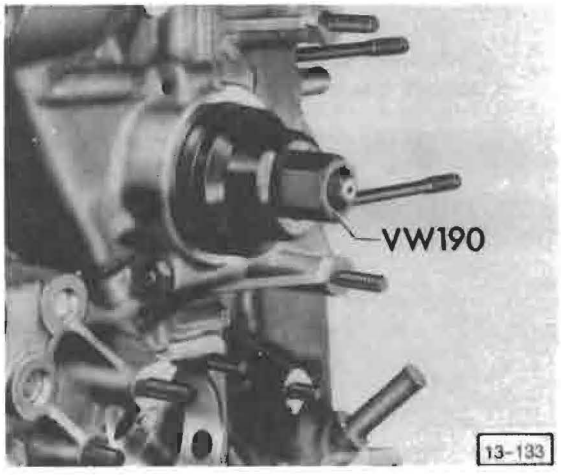

Fig. 7 Crankshaft oil seal, cooling fan side, installing

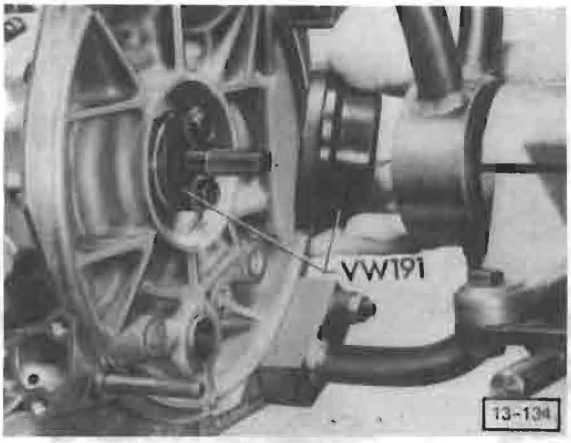

Fig. 8 Crankshaft oil seal, flywheel side, installing

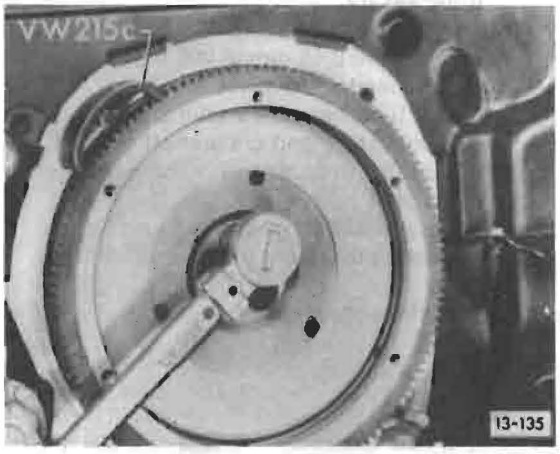

Fig. 9 Flywheel, removing/installing

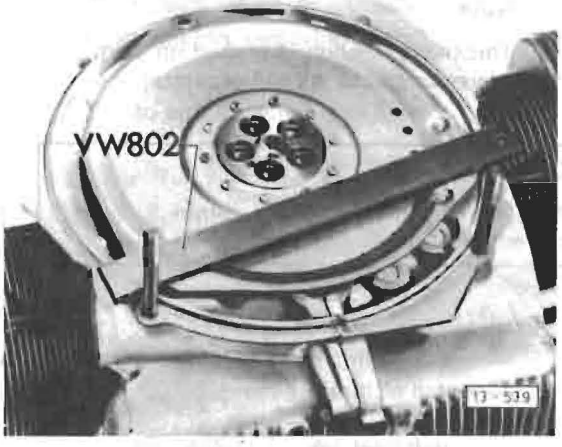

Fig. 10 Torque converter drive plate, removing

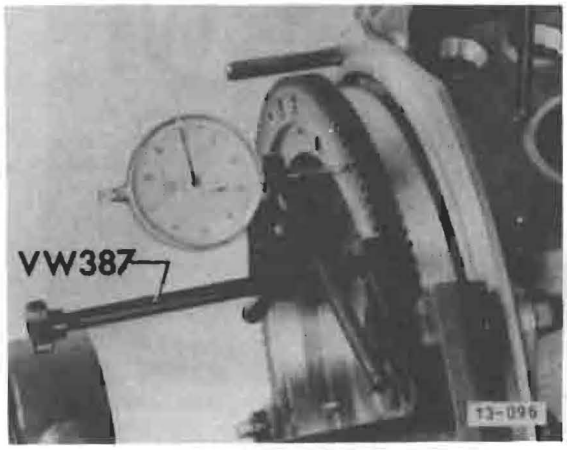

Fig. 11 Crankshaft end play, checking/adjusting

— check crankshaft end play and adjust if necessary
- new: 0.07-0.13 mm (0.003-0.005 in.)
- wear limit: 0.15 mm (0.006 in.)

if **NO**, proceed as follows:
— install flywheel with **2** shims but **without** O-ring and crankshaft oil seal
— mount dial indicator with bracket on crankcase
— move crankshaft in and out and measure movement (crankshaft end play)
— determine thickness of **3rd** shim

Example

dial indicator reading	0.44 mm (0.017 in.)
specified end play	– 0.10 mm (0.004 in.)
thickness of **3rd** shim	0.34 mm (0.013 in.)

Note

Thickness of shim is etched on shim. Always recheck with micrometer

CAUTION

Always intall **three** shims to obtain correct crankshaft end play

— remove flywheel
— install O-ring, crankshaft oil seal and felt ring
— install all three shims

— install flywheel
— tighten bolts to 110 Nm (80 ft lb)
— recheck crankshaft end play

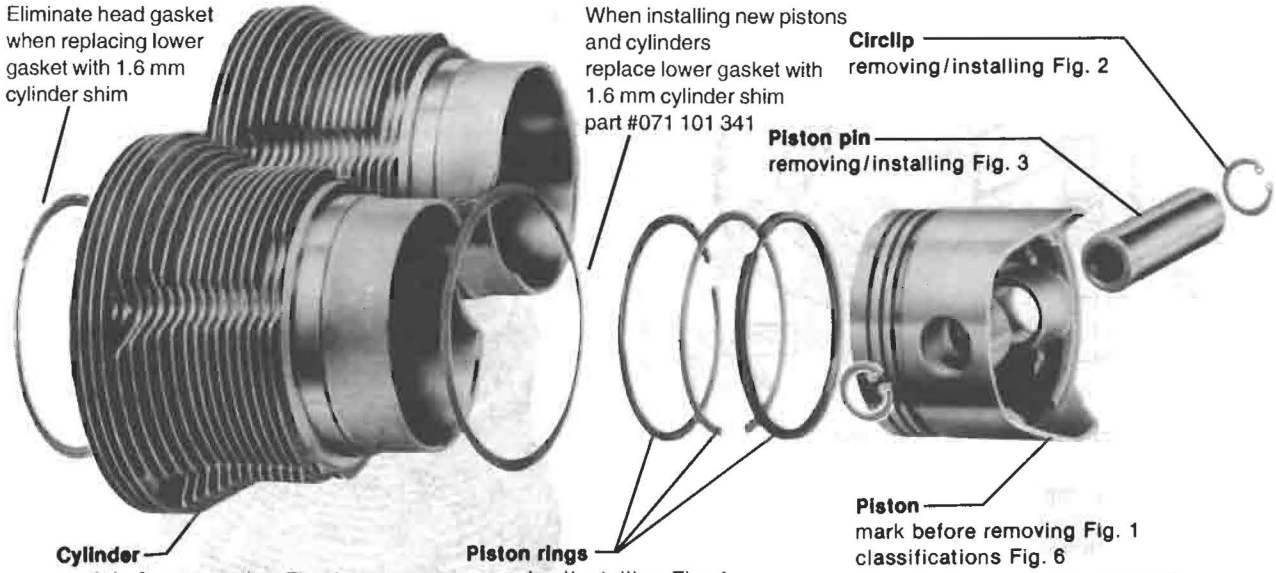

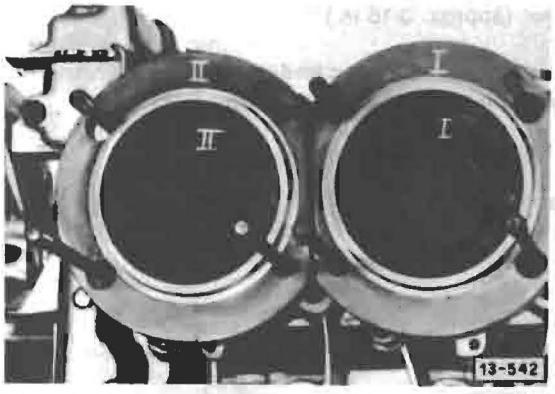

Fig. 1 Pistons/cylinders, marking

- arrow points to flywheel

Note

Before removing, mark matching numbers on pistons and cylinders

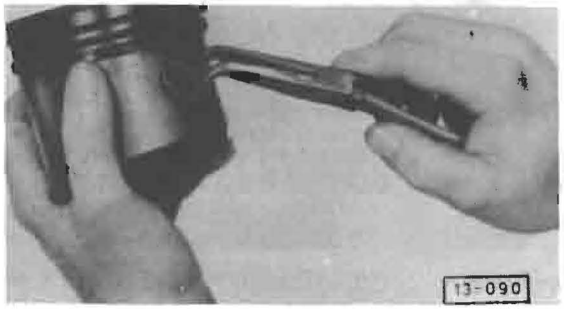

Fig. 2 Circlip, removing/installing



Fig. 3 Piston pin, removing/installing

- if pin is too tight in piston, heat piston to approx. 60°C (140°F)



Fig. 4 Piston rings, removing/installing

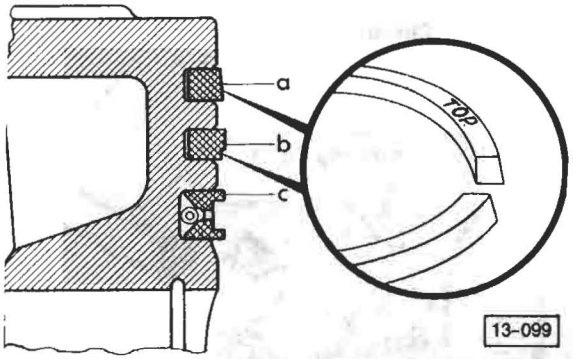

Fig. 5 Piston rings, positioning

- **TOP** mark on piston rings must face top of piston
- **a** = top ring
- **b** = middle ring
- **c** = oil scraper ring

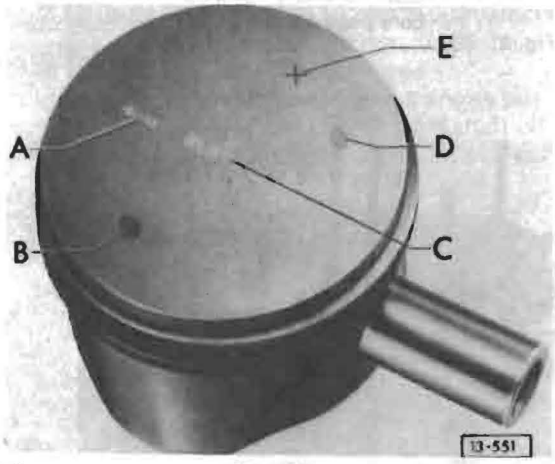

Fig. 6 Piston, classifications

- **A** = arrow must point toward flywheel when installing
- **B** and **C** = piston diameter in mm (blue or pink paint dot indicates matching size)
- **D** and **E** = weight group
  - −(brown) = 474 – 482 grams
  - +(gray) = 482 – 490 grams



Fig. 7 Piston ring end gap, checking

— push ring into cylinder about 4-5 mm (approx. 3/16 in.)

	ring end gap	wear limit
upper/middle ring:	0.40-0.65 mm (0.016-0.026 in.)	0.90 mm (0.035 in.)
oil scraper ring:	0.25-0.40 mm (0.010-0.016 in.)	0.95 mm (0.037 in.)



Fig. 8 Piston ring side clearance, checking

	clearance	wear limit
upper/middle ring:	0.04-0.07 mm (0.002-0.003 in.)	0.12 mm (0.005 in.)
oil scraper ring:	0.02-0.05 mm (0.001-0.002 in.)	0.10 mm (0.004 in.)

CAUTION

If measurement of piston/cylinder shows that clearance is close to 0.2 mm (0.008 in.), piston/cylinder should be replaced by set of same size group (standard or oversize). Weight difference of pistons must not exceed 10 grams.
If cylinder of damaged piston shows no wear, install new piston of appropriate matching size.
Cylinders/pistons must be of same size group.

Cylinder bore/Piston diameter

	Cylinder bore (mm)	Piston dia. (mm)
Standard (94.0 mm)		
blue	93.992-94.008	93.97
pink	94.002-94.018	93.98
1st oversize (94.5 mm)		
blue	94.492-94.508	94.47
pink	94.502-94.518	94.48
2nd oversize (95.0 mm)		
blue	94.992-95.008	94.97
pink	95.002-95.018	94.98



Fig. 9 Cylinder, checking for wear

— measure 10-16 mm (3/8-5/8 in.) from top

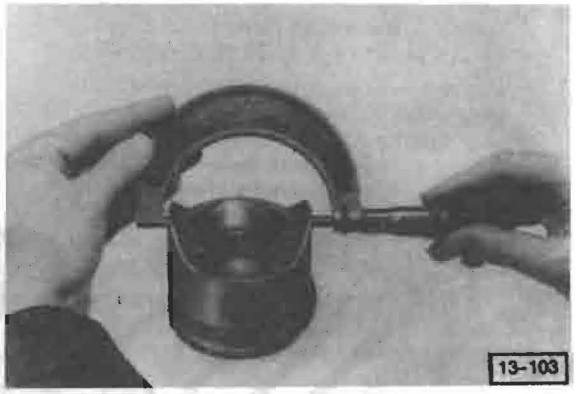

Fig. 10 Piston, checking diameter/wear

— measure at bottom of skirt approx. 16 mm (3/8 in.) from edge (diameter stamped in top of piston)
- clearance new: 0.02-0.05 mm (0.001-0.002 in.)
- wear limit: 0.2 mm (0.008 in.)

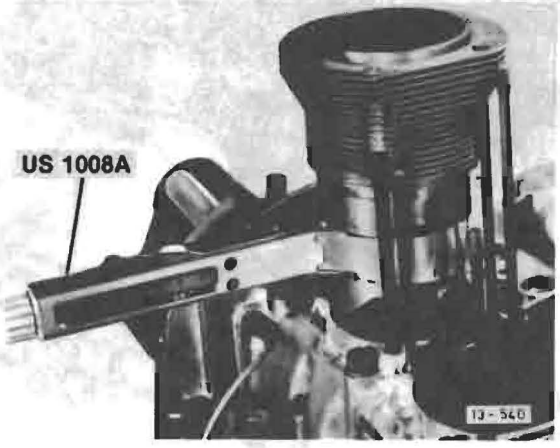

Fig. 11 Cylinder, installing

- piston ring end gaps must be offset 120°

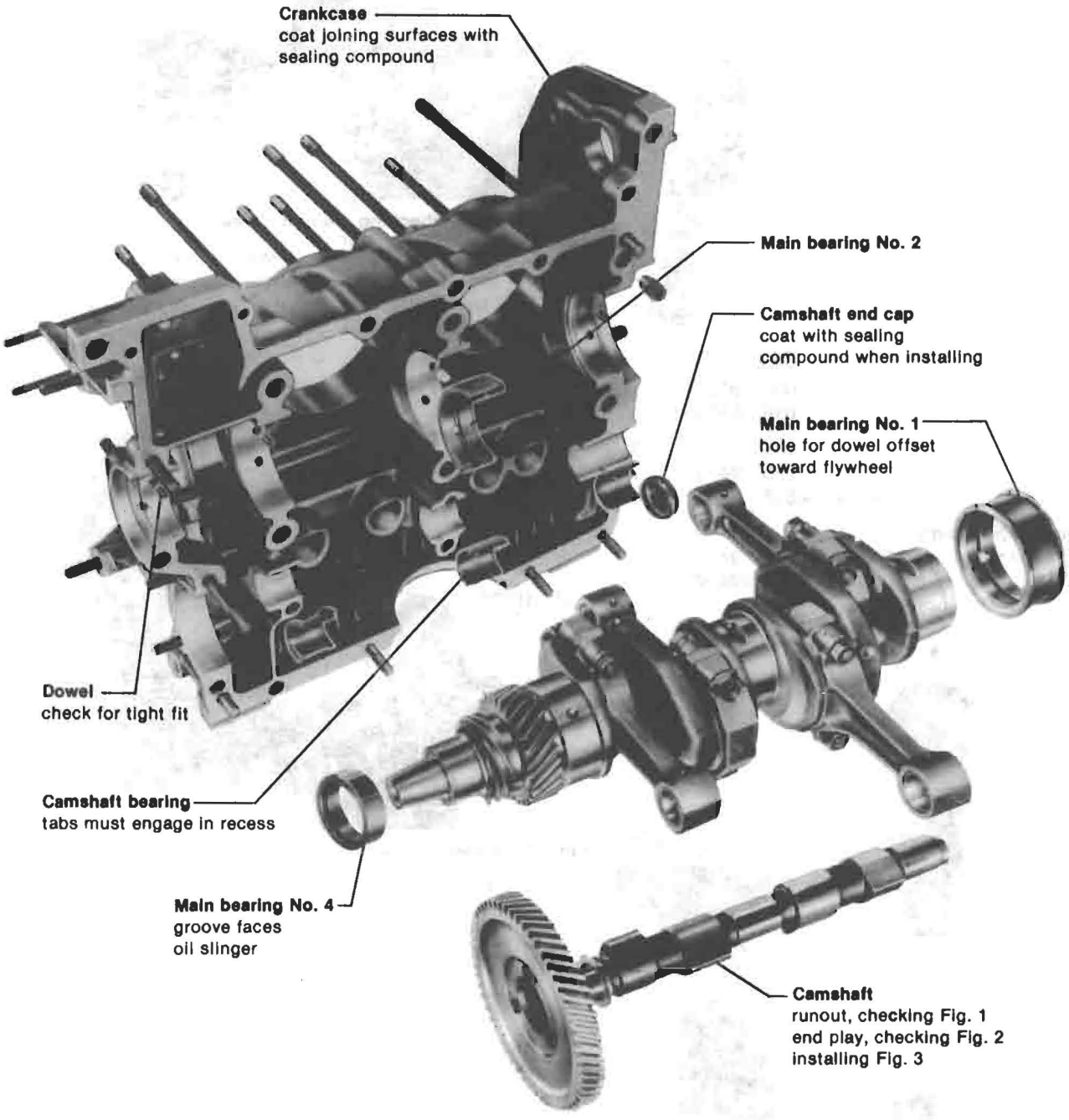
Crankcase
coat joining surfaces with sealing compound
Main bearing No. 2
Camshaft end cap
coat with sealing compound when installing
Main bearing No. 1
hole for dowel offset toward flywheel
Dowel
check for tight fit
Camshaft bearing
tabs must engage in recess
Main bearing No. 4
groove faces oil slinger
Camshaft
runout, checking Fig. 1
end play, checking Fig. 2
installing Fig. 3
13-545

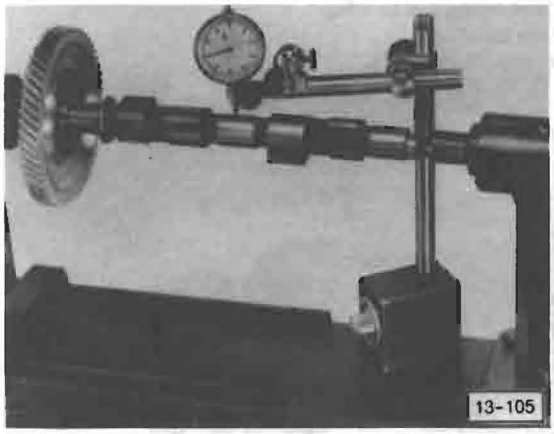

Fig. 1 Camshaft runout, checking

- wear limit 0.04 mm (0.0015 in.)



Fig. 2 Camshaft end play, checking

- wear limit 0.16 mm (0.006 in.)
- if out of specification, replace camshaft bearings

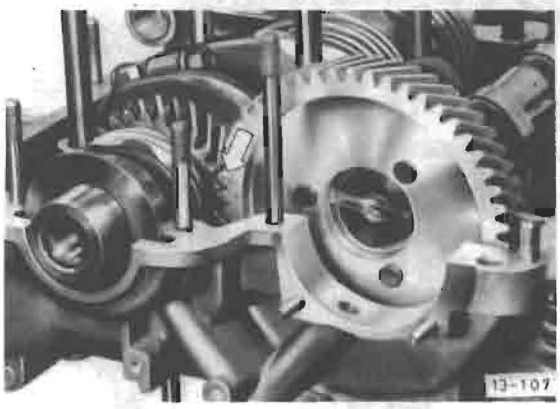

Fig. 3 Camshaft, installing

— mark on camshaft gear tooth must be between marks on crankshaft gear teeth
— check backlash of timing gears
- 0.0-0.05 mm (0-0.002 in.)
- backlash must be hardly noticeable

— turn crankshaft **backward**
- camshaft must not lift out of bearings
- if camshaft lifts out of bearings, install camshaft with smaller timing gear

Note

To obtain specified backlash, camshafts with various size timing gears are available.
Markings are on **inner** face of timing gear.

Example
"−0.1", "+0.1", "+0.2", indicates in 1/100 mm how much pitch radius differs from standard pitch radius "0"

CAUTION

Mark **0** on **outer** face of camshaft timing gear is timing mark and must not be confused with markings on **inner** face.
Crankshaft timing gear is available in one size only

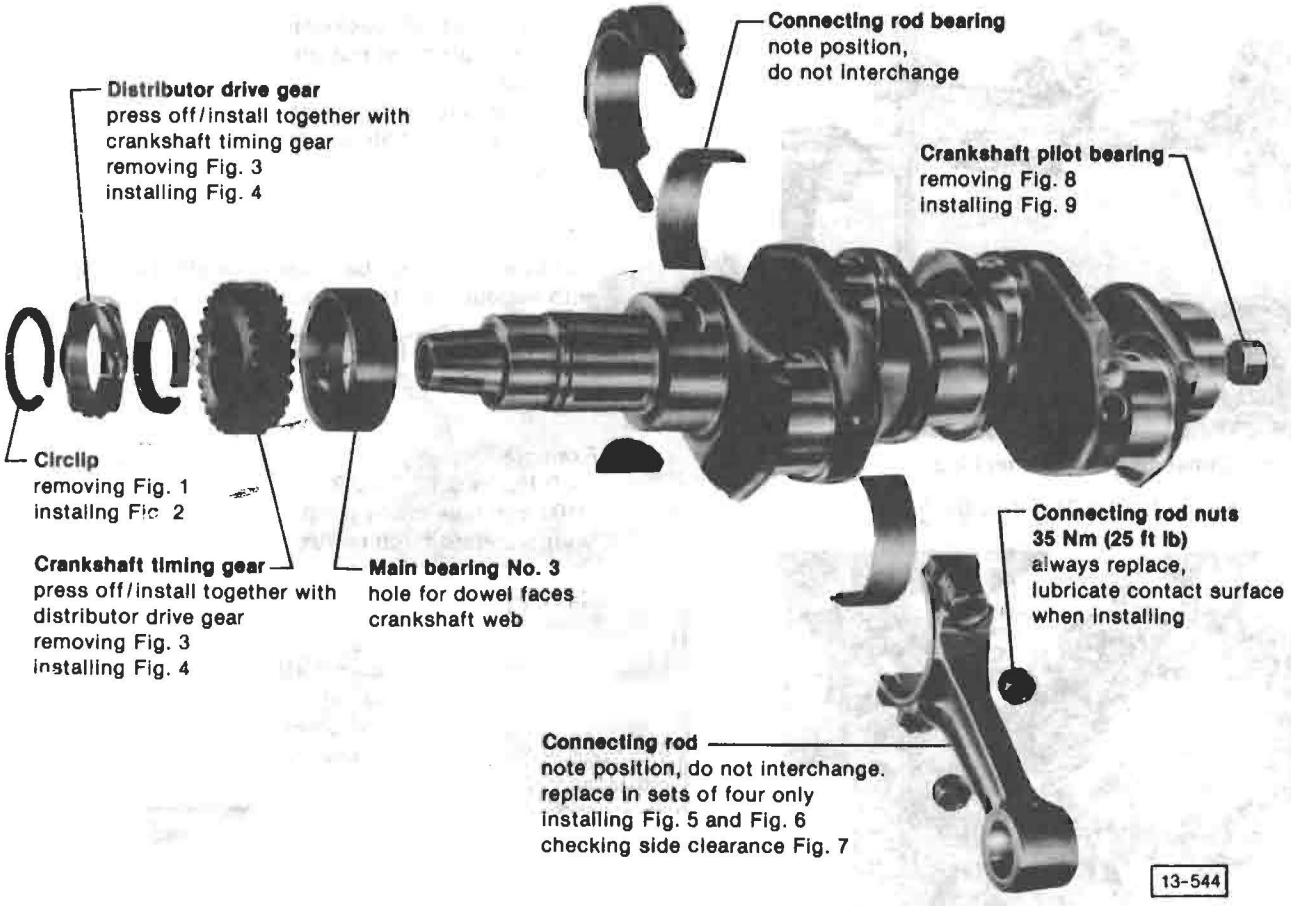

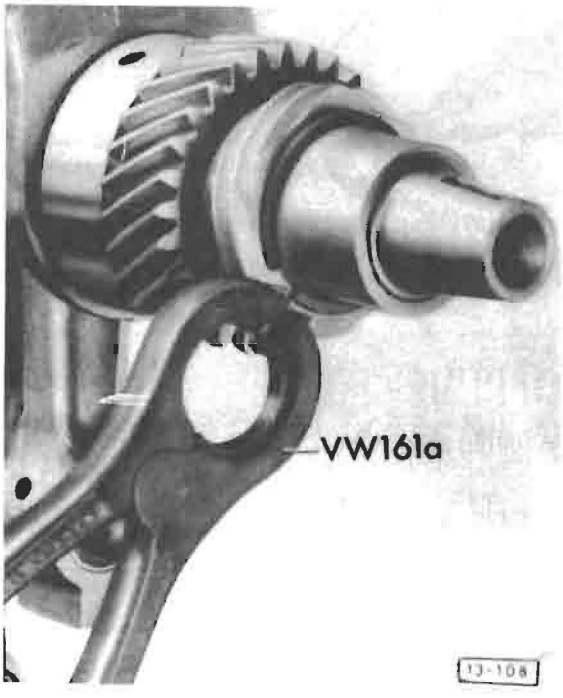

Fig. 1 Circlip, removing

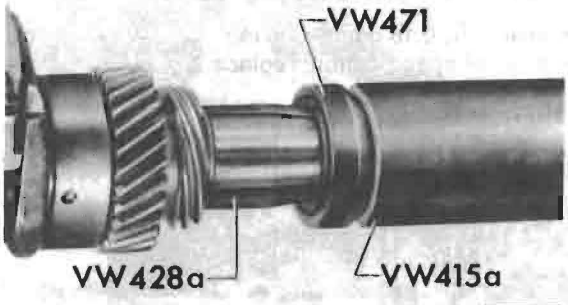

Fig. 2 Circlip, installing

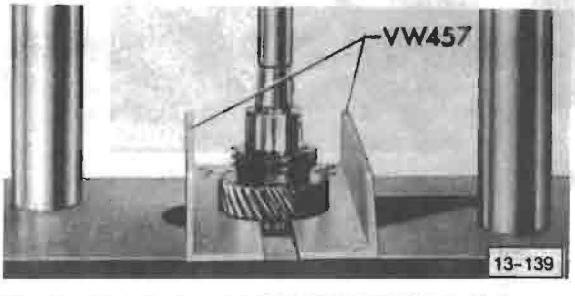

Fig. 3 Distributor drive gear/crankshaft timing gear, removing



Fig. 4 Distributor drive gear/crankshaft timing gear, installing

— heat gears to approx. 80 °C (175 °F) before installing



Fig. 5 Connecting rod, installing

— numbers (arrow) on rod and cap must be on same side

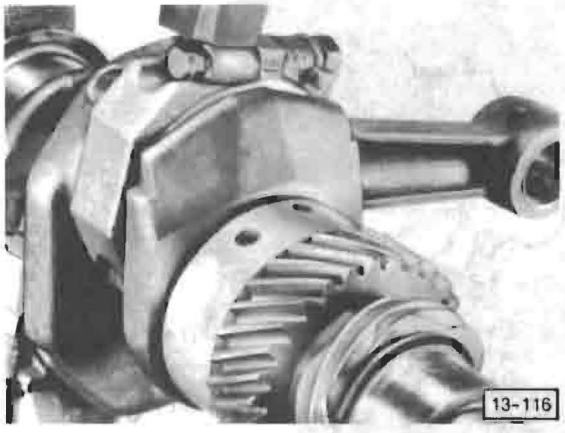

Fig. 6 Connecting rod, installing

— lightly tap both sides of connecting rod with hammer to eliminate slight pinching of bearing shells when installing connecting rod

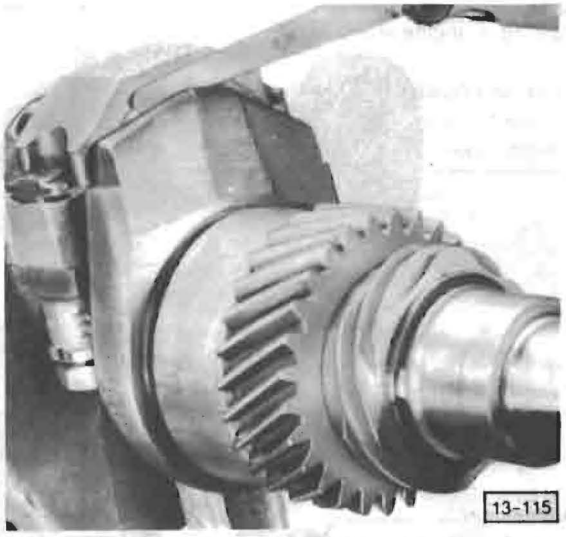

Fig. 7 Connecting rod, checking side clearance

- wear limit 0.7 mm (0.028 in.)

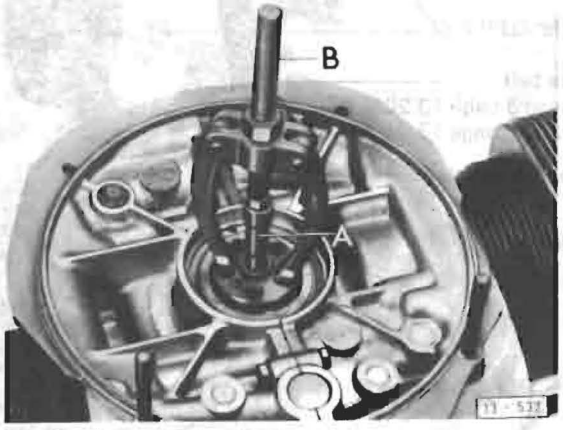

Fig. 8 Crankshaft pilot bearing, removing

A = US 8028
B = US 1039 & US 1039/3

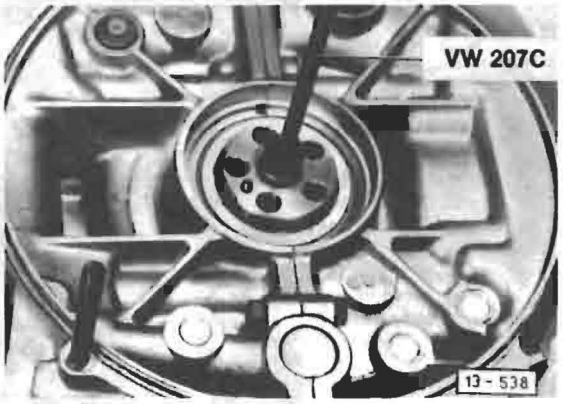

Fig. 9 Crankshaft pilot bearing, installing

— lubricate with MoS_2 grease when installing
- markings on bearing cage must be visible when installed

Engine
mounting in engine stand Fig. 1

Note

Defective injectors can cause violent knocking noises which sound like faulty bearings. If this occurs, run engine at idle and loosen injection pipe unions one after the other. If knocking stops when a union is loosened, that injector is defective

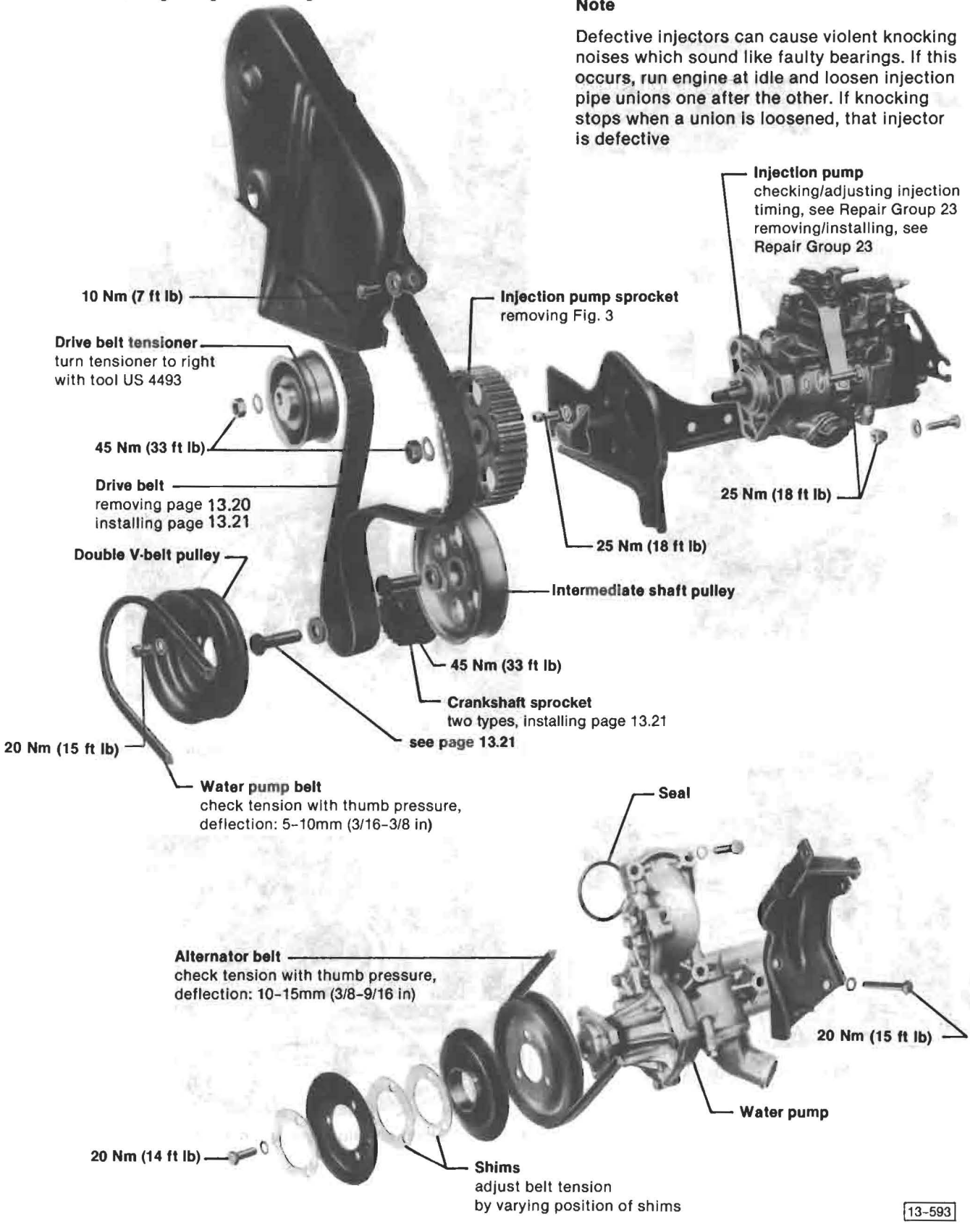

CAUTION

Coolant/antifreeze **must not** be reused when replacing engine, cylinder head, cylinder head gasket, radiator and heater core.

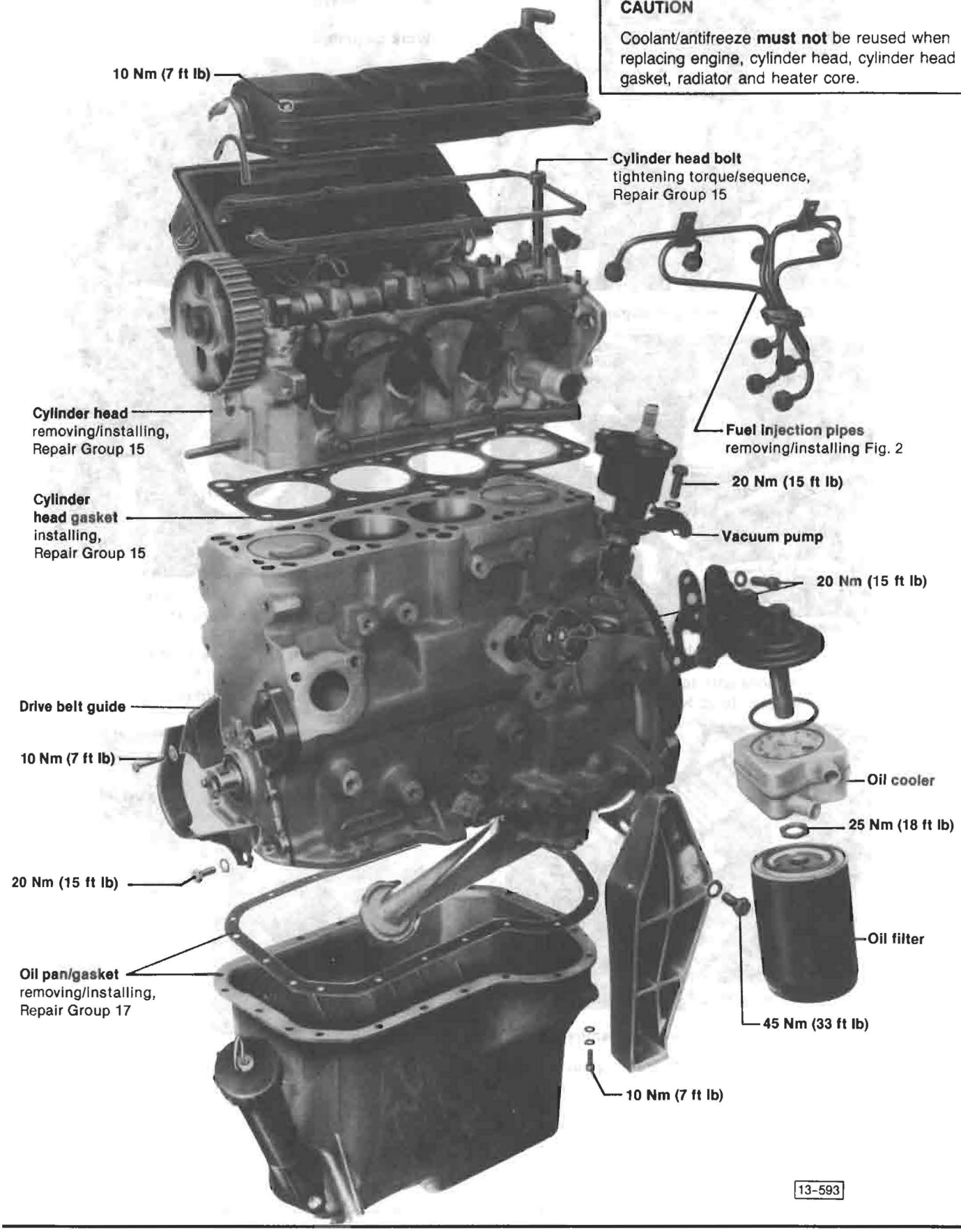

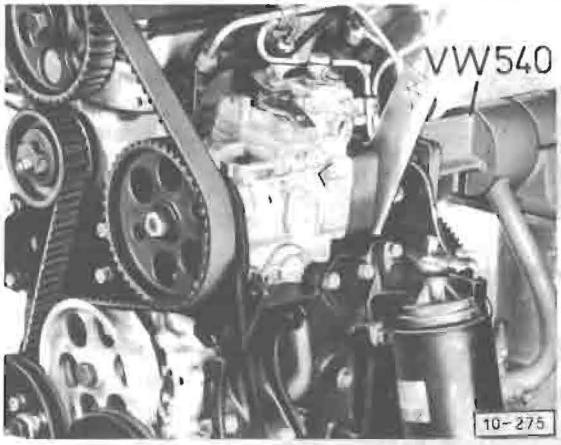

Fig. 1 Engine, mounting in engine stand

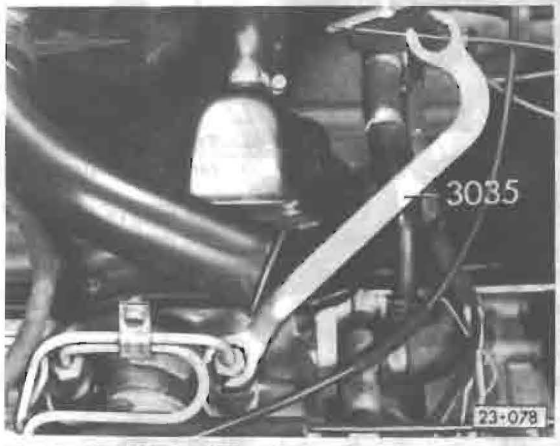

Fig. 2 Fuel injection pipes, removing/installing

—remove with tool 3035
—tighten to 25 Nm (18 ft lb)

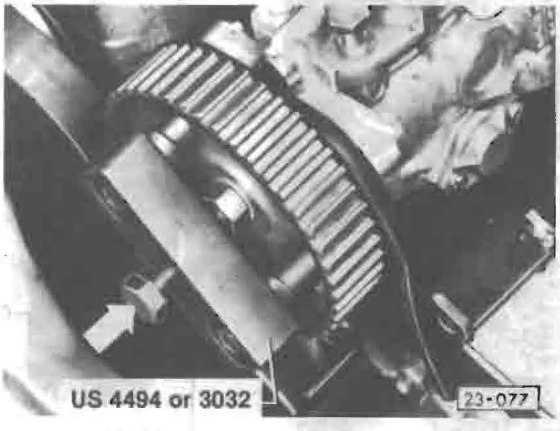

Fig. 3 Injection pump sprocket, removing

—loosen sprocket retaining nut slightly
—carefully apply tension with puller
—hit puller spindle head (arrow) with light hammer taps until sprocket loosens from injection pump shaft
—remove puller and nut
—remove sprocket by hand

Drive belt, removing

Work sequence

—remove bolt cover and valve cover

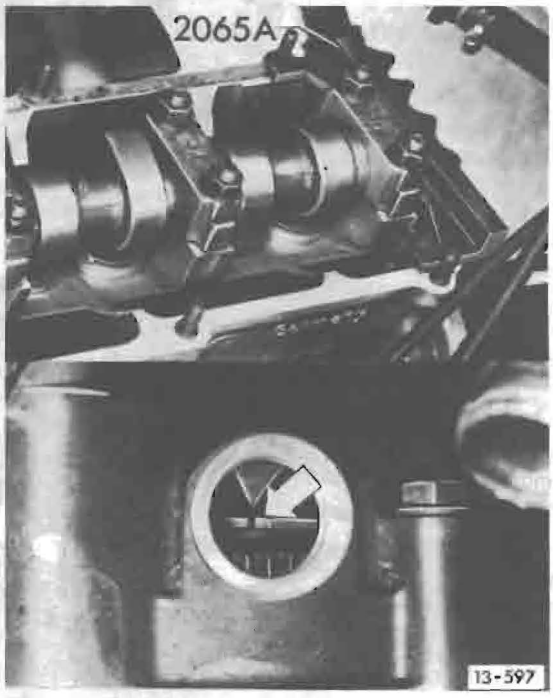

—turn engine to TDC arrow on cylinder No. 1 and fix camshaft in position with tool 2065A
—align tool as follows:
- turn camshaft until one end of tool touches cylinder head
- measure gap at other end of tool with feeler gauge
- take half of measurement and insert feeler of this thickness between tool and cylinder head
- turn camshaft so that tool rests on feeler
- insert second feeler of same thickness between other end of tool and cylinder head

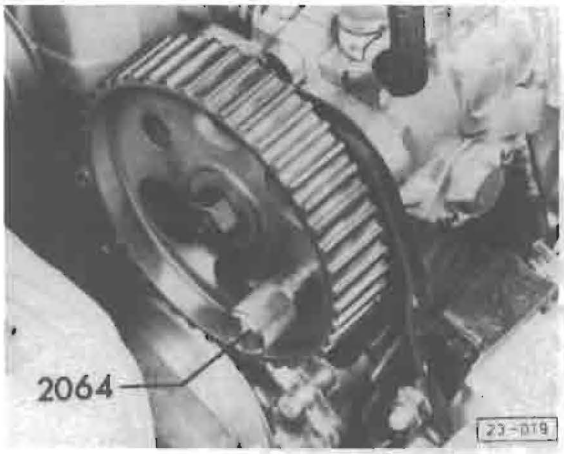

—lock injection pump sprocket in position with pin 2064
—check that marks on sprocket, bracket and pump body are aligned (engine at TDC)
—loosen tensioner

—remove V-belt pulley from crankshaft
—remove drive belt

Drive belt, installing

Work sequence

—check that TDC mark on clutch pressure plate is aligned with reference mark
—loosen camshaft sprocket bolt 1/2 turn and loosen gear from camshaft by tapping with rubber hammer
—install drive belt and remove pin 2064 from injection pump sprocket
—tension belt by turning tensioner to right



—check that on VW 210, scale reads 12–13
• check belt tension between camshaft sprocket and injection pump sprocket
—tighten camshaft sprocket bolt to 45 Nm (33 ft lb)
—remove tool from camshaft
—turn crankshaft 2 turns in direction of engine rotation (clockwise)
—strike belt once with rubber hammer between camshaft sprocket and injection pump sprocket
—check belt tension again
—check injection pump timing, see Repair Group 23

Drive belt sprocket bolt, tightening

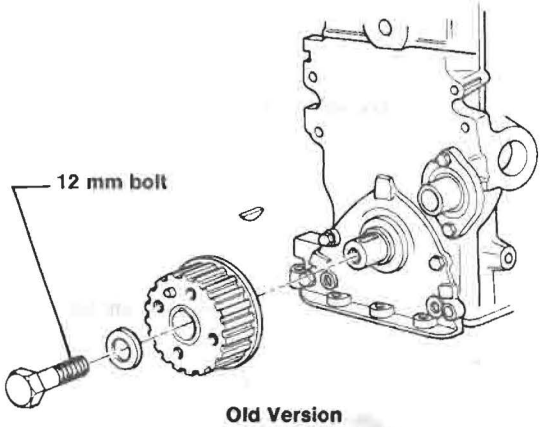

Old Version
150 Nm (108 ft lb)
with locking compound

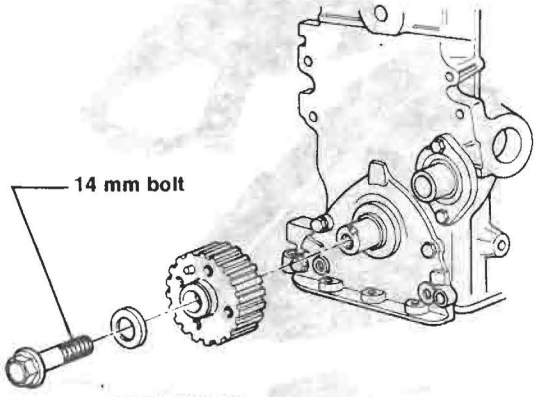

New Version
200 Nm (148 ft lb)
lubricate threads before installing

Shown above are the two versions of drive belt sprocket used on Diesel Vanagon. Ensure that the correct tightening torque specification is used when repairing these engines.

Fully closed drive belt cover

Beginning in February 1984, the Diesel engine has been produced with a fully closed drive belt cover.

Additional new parts include a revised injection pump mounting bracket and intermediate shaft pulley. The pulley now mounts closer to the engine block.

Note

Only the new version pulleys will be supplied as service parts.

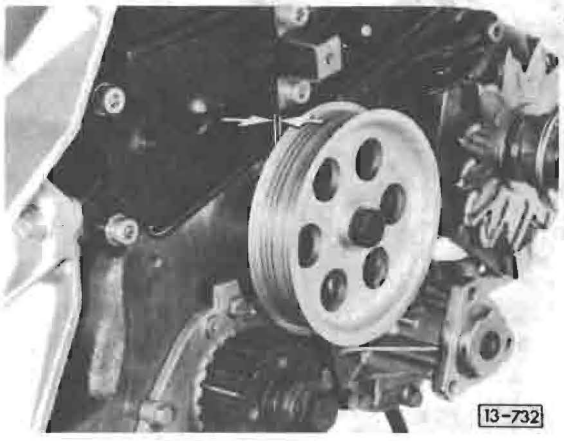

When installing the new version pulley in earlier engines (without fully closed belt cover) it is necessary to provide at least 0.5 mm (0.020 in.) clearance between pulley and injection pump mounting bracket (arrows). Rework pump bracket as necessary.

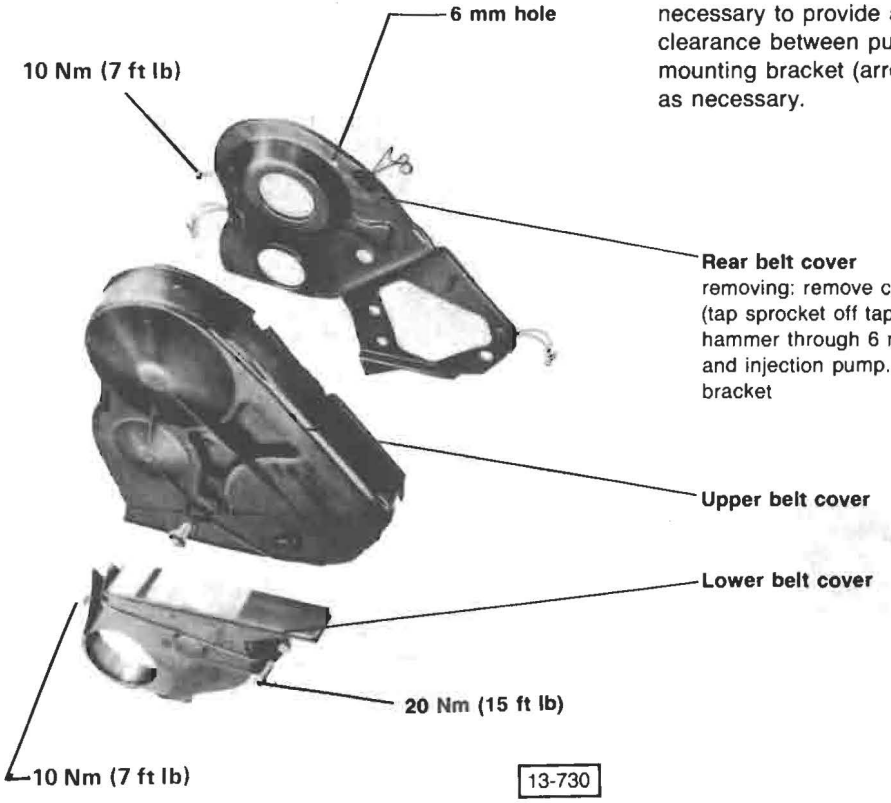

Note

Defective injectors can cause violent knocking noises which sound like faulty bearings. If this occurs, run engine at idle and loosen injection pipe unions one after the other. If knocking stops when a union is loosened, that injector is defective

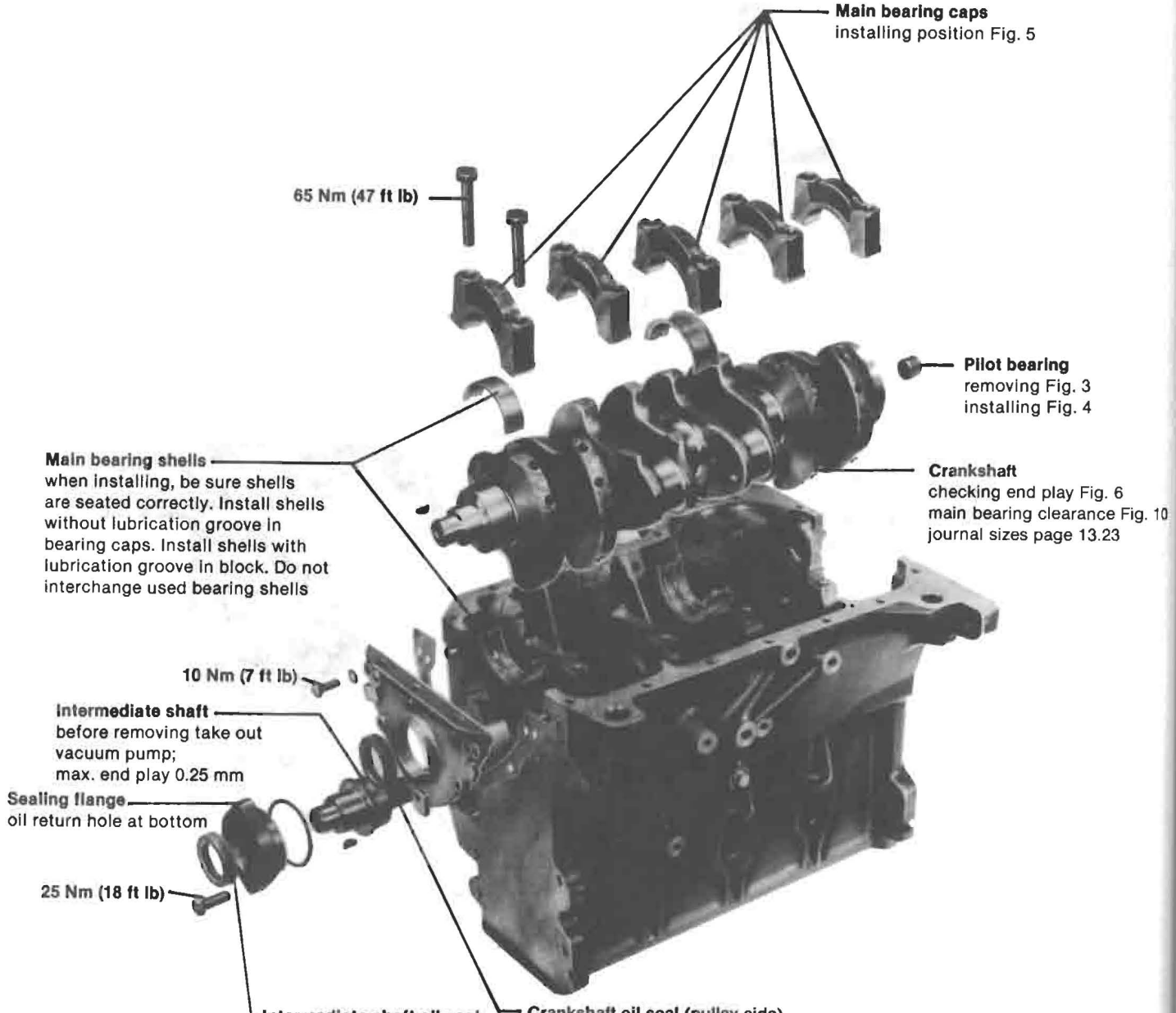

WARNING

Friction materials such as brake and clutch linings, or brake pads may contain asbestos fibers.

Do not create dust by grinding, sanding or by cleaning with compressed air.

Avoid breathing asbestos fibers and asbestos dust.

Breathing asbestos may result in serious diseases, such as asbestosis or cancer.

It may cause severe injury and death.

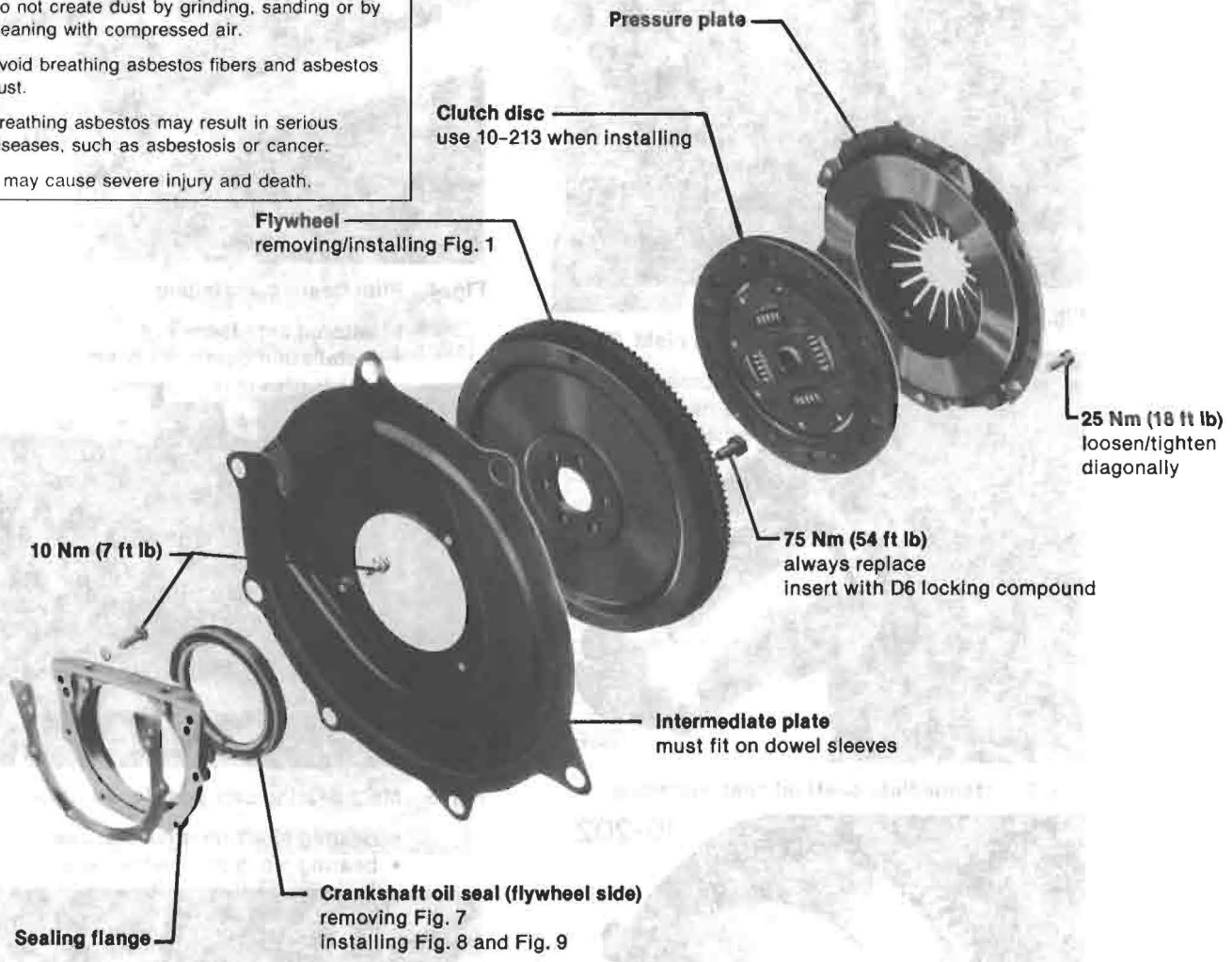

Fig. 10

Crankshaft journal sizes (mm)

Stage	Main bearing journals	Max. out of round	Connecting rod journals	Max. out of round
Standard	53.96-53.98	0.03	47.76-47.78	0.03
1st undersize	53.71-53.73	0.03	47.51-47.53	0.03
2nd undersize	53.46-53.48	0.03	47.26-47.28	0.03
3rd undersize	53.21-53.23	0.03	47.01-47.03	0.03

Note

3 undersizes of bearing shells available in graduations of 0.25 mm

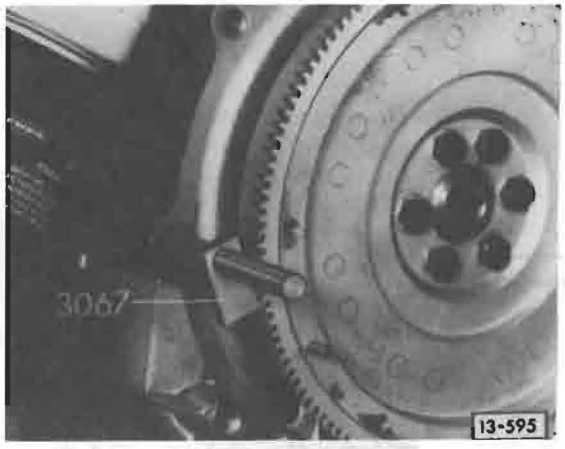

Fig. 1 Flywheel, removing/installing

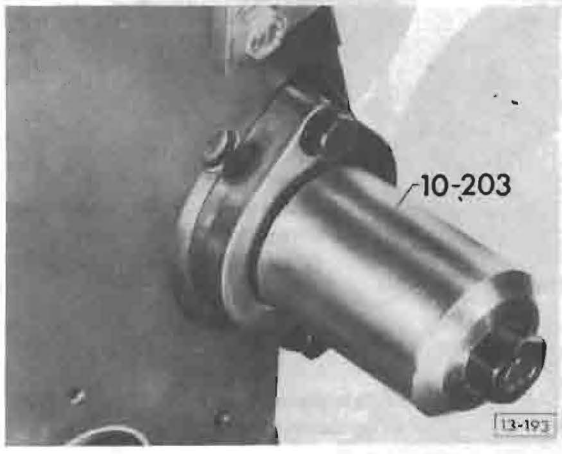

Fig. 2 Intermediate shaft oil seal, installing

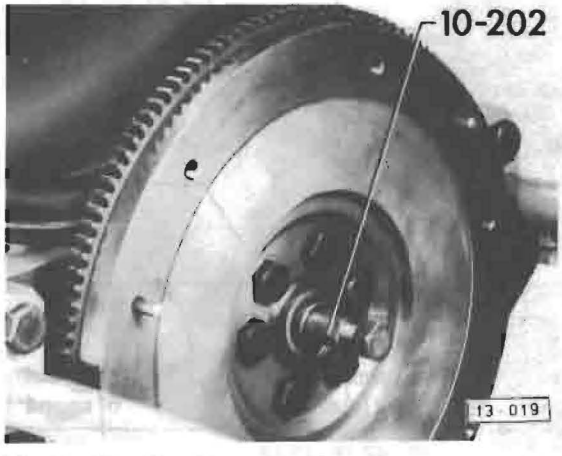

Fig. 3 Pilot bearing, removing

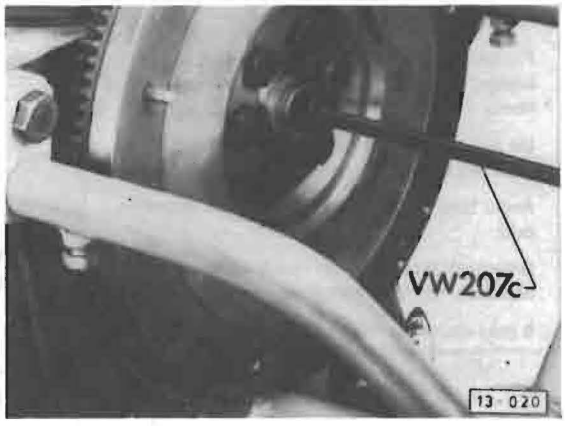

Fig. 4 Pilot bearing, installing

- lettered side faces out
- installation depth = 1.5 mm (0.060 in)

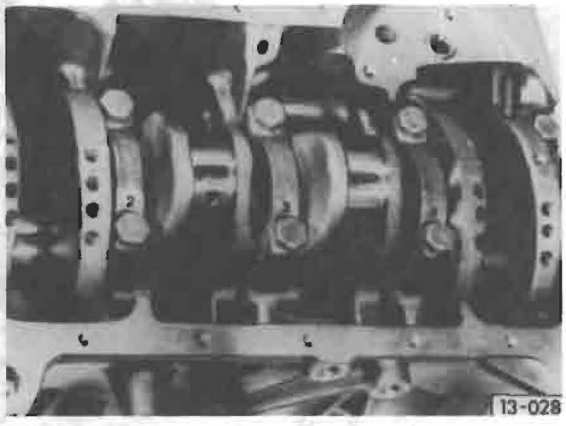

Fig. 5 Main bearing cap, positions

- bearing No. 1 on drive belt side
- bearing No. 5 on flywheel side

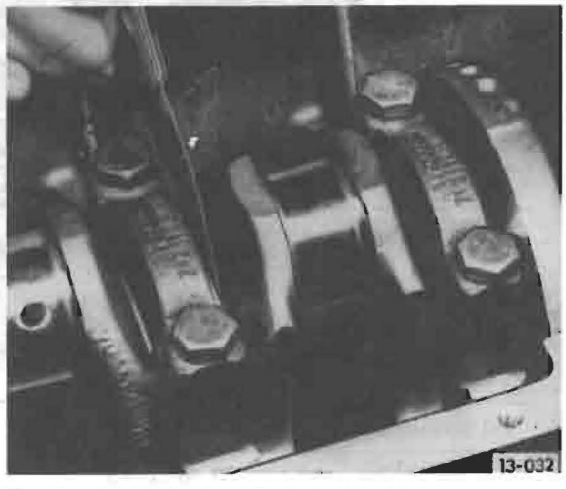

Fig. 6 Crankshaft end play, checking

—check with feeler gauge on main bearing No. 3

- new part = 0.07–0.17 mm (0.003–0.007 in.)
- wear limit = 0.37 mm (0.015 in.)

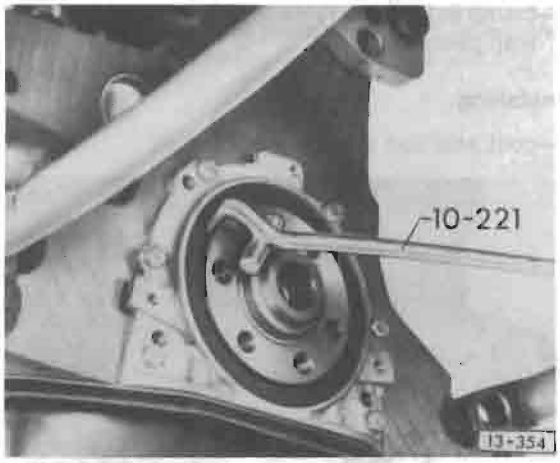

Fig. 7 Crankshaft oil seal (flywheel side), removing

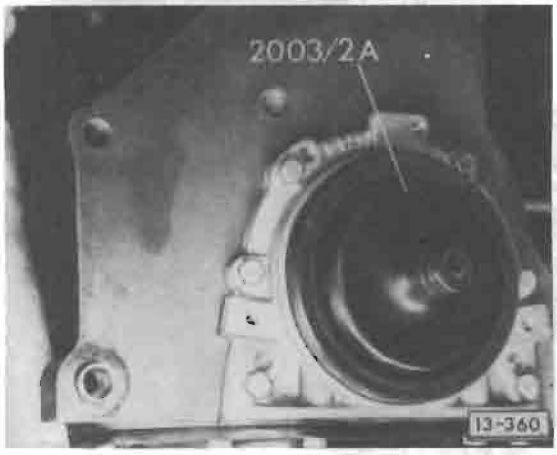

Fig. 8 Crankshaft oil seal (flywheel side), installing

—center with sleeve first

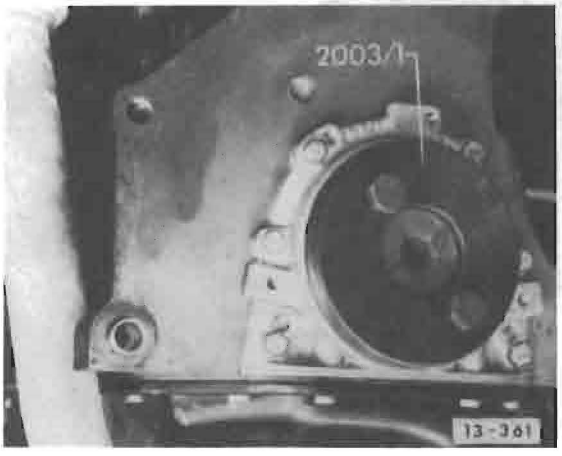

Fig. 9 Crankshaft oil seal (flywheel side), installing

—press in seal until fully seated

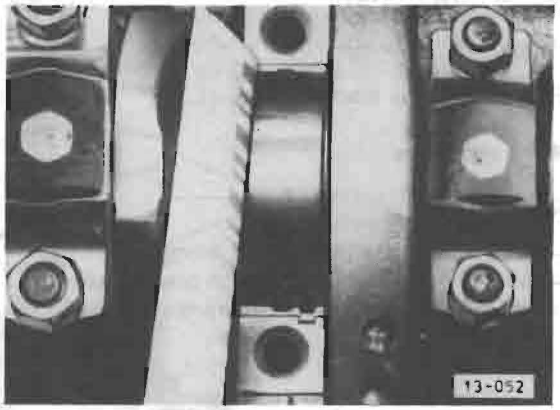

Fig. 10 Main bearing clearance, checking

—remove bearing caps
—clean shells and journals
—measure clearance with Plastigage
- new part: 0.03–0.08 mm (0.001–0.003 in.)
- wear limit: 0.17 mm (0.007 in.)

CAUTION

Do not turn crankshaft

Crankshaft oil seal (pulley side), removing/installing

Note

Puller 2002 may also be used

Work sequence

Removing

—remove drive belt cover and drive belt
—remove drive belt sprocket on crankshaft
—remove woodruff key from crankshaft

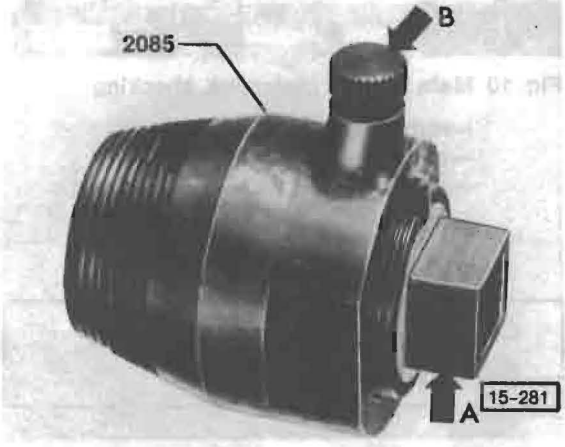

—unscrew inner part (arrow A) of oil seal extractor 2085 2 turns (approx. 3mm/1/8 in.) out of outer part
—lock in position with knurled screw (arrow B)
—to guide extractor, screw sprocket bolt into crankshaft until it projects about 20 mm (3/4 in.)
—lubricate threads on tapered end of seal extractor

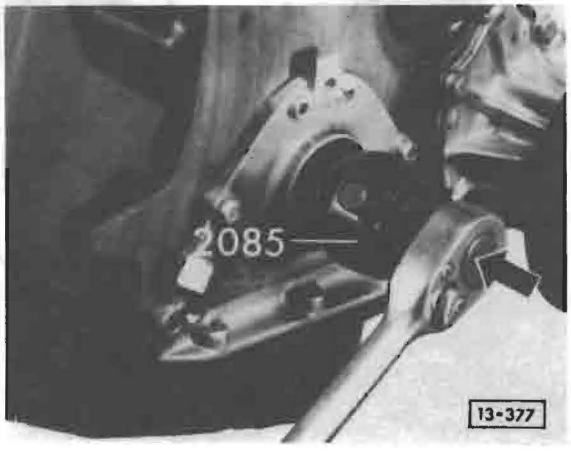

—position seal extractor and screw it into oil seal as far as possible by pushing firmly in direction of arrow
—loosen knurled screw and turn inner part in against crankshaft until oil seal is pulled out
—clamp extractor in vise and remove oil seal with pliers

Installing

—coat seal lips with oil

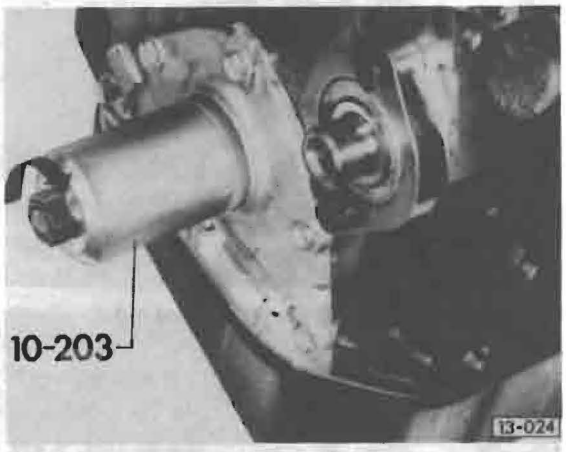

—press in seal to a depth of 2 mm (0.080 in.) below outer edge of cover
• use washer from sprocket bolt between bolt head and tool

Note

When installing new pistons or short block, check piston height to determine head gasket thickness, see Fig. 15 and Fig. 16

Defective injectors can cause violent knocking noises which sound like faulty bearings. If this occurs, run engine at idle and loosen injection pipe unions one after the other. If knocking stops when a union is loosened, that injector is defective

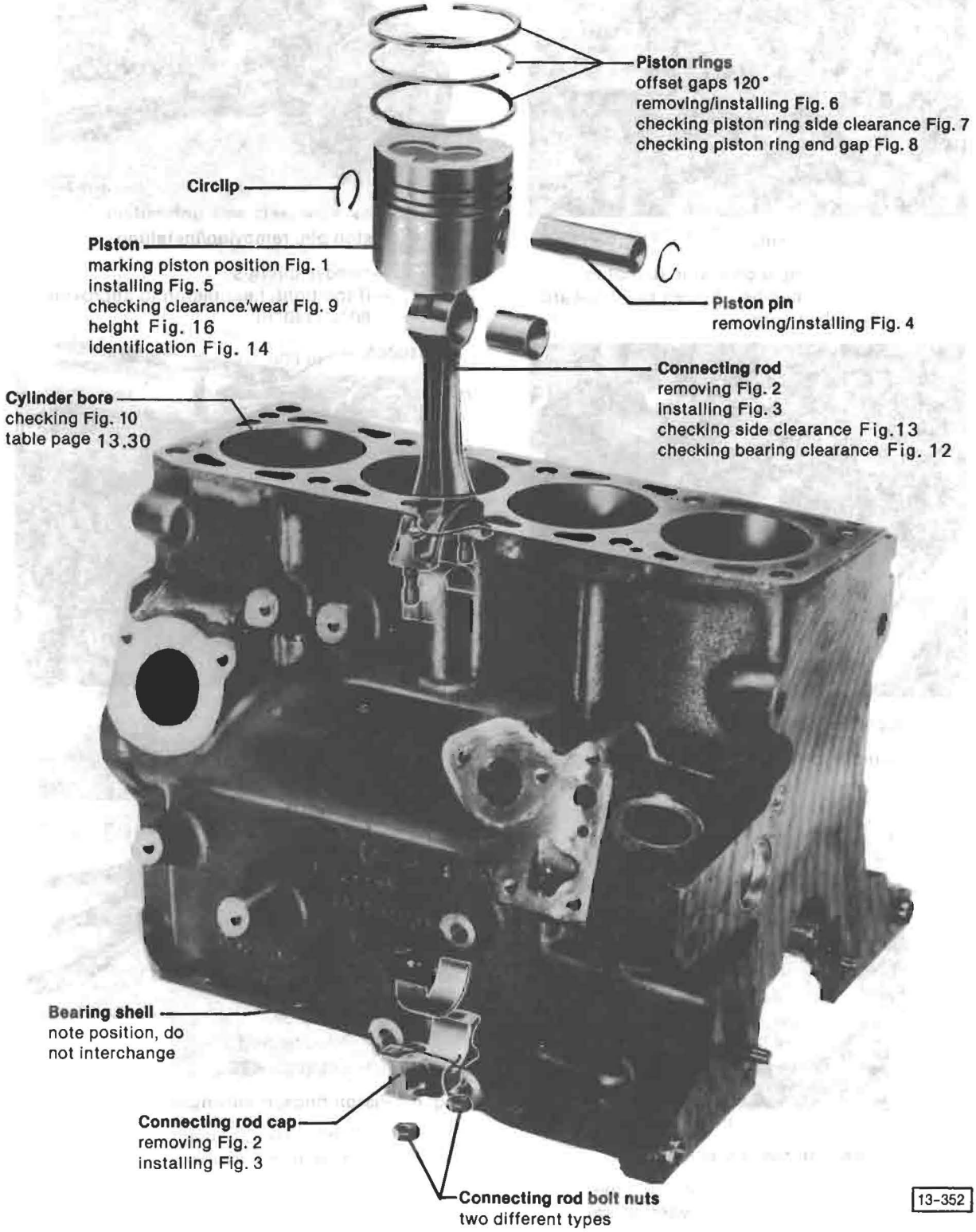

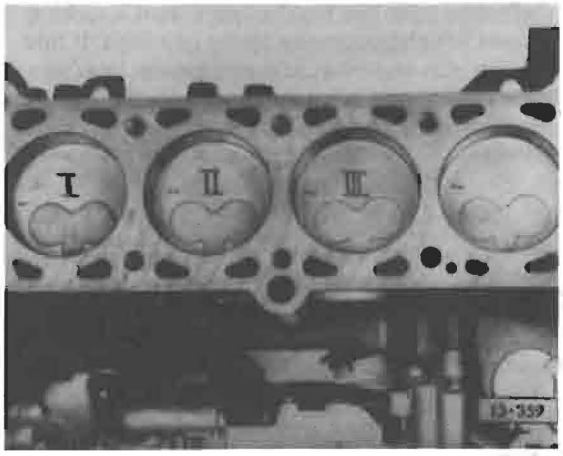

Fig. 1 Pistons, marking

—mark number on piston to match cylinder number. Arrows point toward drive belt side

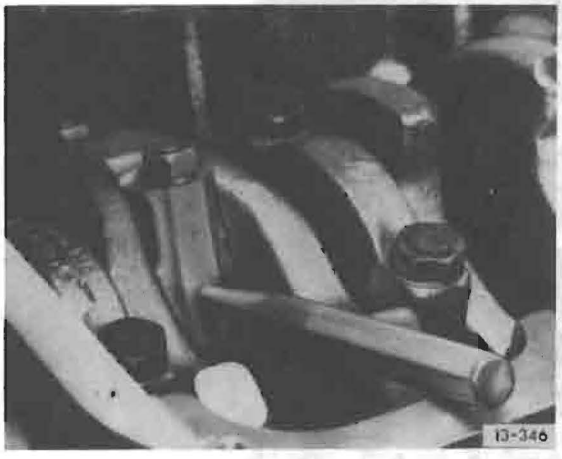

Fig. 2 Connecting rod, removing

—mark rod and cap before removing

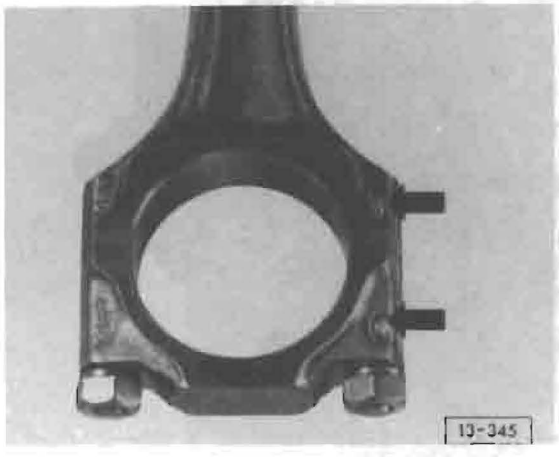

Fig. 3 Connecting rod, installing

—casting marks and retaining lug for bearing shell face toward intermediate shaft (arrows)

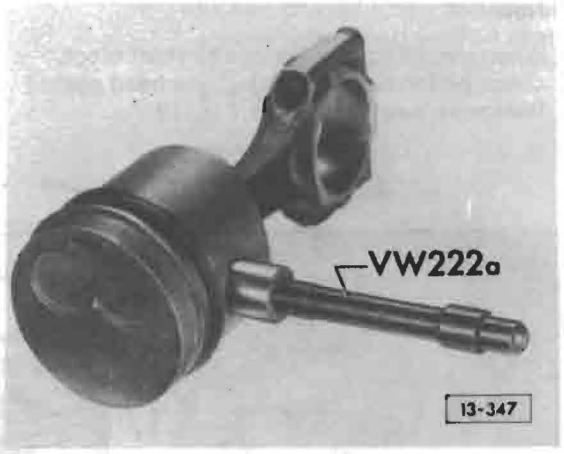

Fig. 4 Piston pin, removing/installing

—remove circlips
—if too tight, heat piston to approximately 60 °C (140 °F)

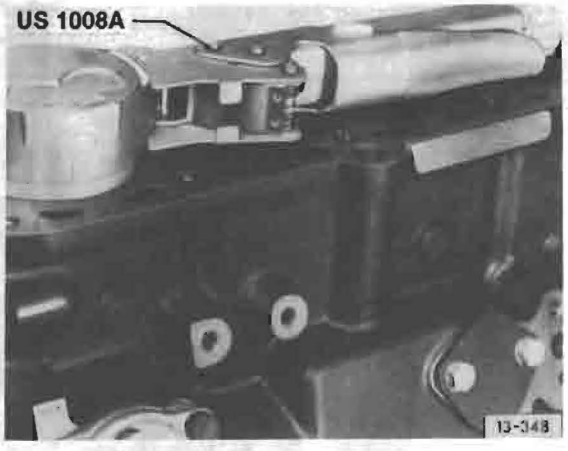

Fig. 5 Pistons, installing

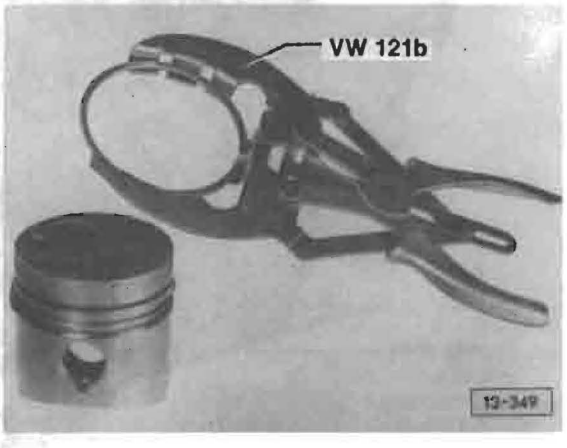

Fig. 6 Piston rings, removing/installing

—"Top" marks on piston rings must face toward piston crown

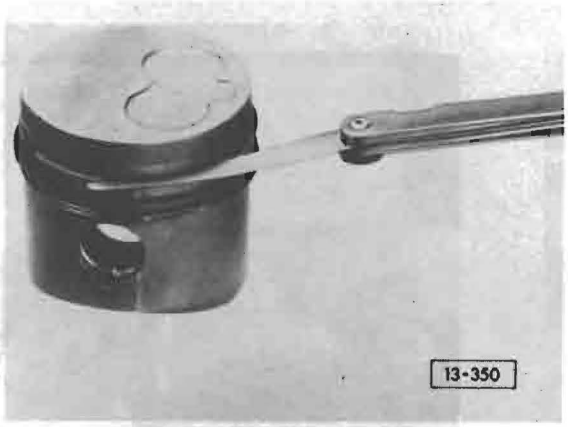

Fig. 7 Piston ring side clearance, checking

	Clearance	Wear limit
Upper ring	0.06–0.09 mm (0.002–0.004 in.)	0.2 mm (0.008 in.)
Lower ring	0.05–0.08 mm (0.002–0.003 in.)	0.2 mm (0.008 in.)
Oil scraper ring	0.03–0.06 mm (0.001–0.002 in.)	0.15 mm (0.006 in.)

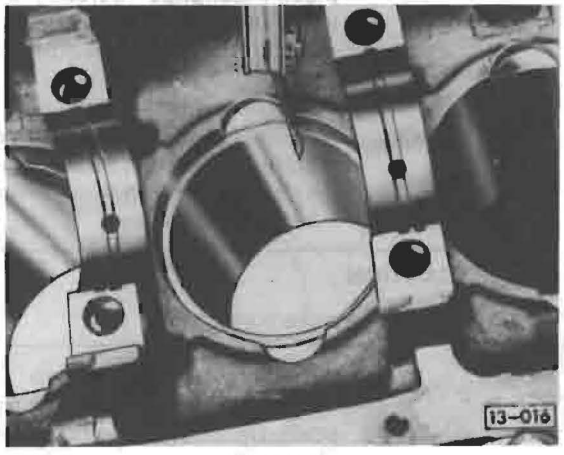

Fig. 8 Piston ring end gap, checking

—push ring down squarely into cylinder until it is about 15 mm (9/16 in.) from top edge

	Ring gap	Wear limit
Upper and lower rings	0.3–0.5 (0.012–0.020 in.)	1 mm (0.039 in.)
Oil scraper ring	0.25–0.40 mm (0.010–0.016 in.)	1 mm (0.039 in.)

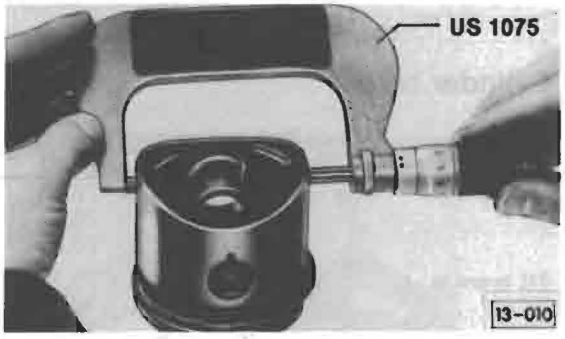

Fig. 9 Piston, checking for wear

—measure about 15 mm (9/16 in.) from lower edge

Piston diameter

	Piston dia. (mm)	Cylinder bore (mm)
Standard	76.48	76.51
	76.49	76.52
	76.50	76.53
1st oversize	76.73	76.76
	76.74	76.77
	76.75	76.78
2nd oversize	76.98	77.01
	76.99	77.02
	77.00	77.03
3rd oversize	77.48	77.51
	77.49	77.52
	77.50	77.53

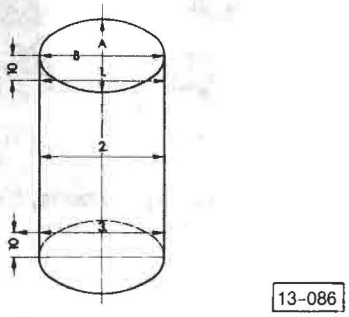

Fig. 10 Cylinder clearance, checking

—measure at points 1, 2 and 3 first in direction A then direction B
1 = 10 mm (3/8 in.) from top
2 = middle of cylinder wall
3 = 10 mm (3/8 in.) from bottom

- piston to cylinder clearance
  new part: 0.03 mm (0.0011 in.)
  wear limit: 0.07 mm (0.0027 in.)

Note

Do not measure when block is mounted in repair stand as measurements may be incorrect due to distortion

Cylinder bore

	Bore (mm)	Piston dia. (mm)
Standard	76.51	76.48
	76.52	76.49
	76.53	76.50
1st oversize	76.76	76.73
	76.77	76.74
	76.78	76.75
2nd oversize	77.01	76.98
	77.02	76.99
	77.03	77.00
3rd oversize	77.51	77.48
	77.52	77.49
	77.53	77.50

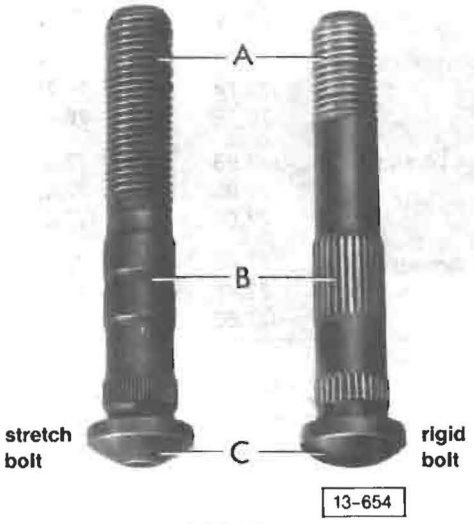

Fig. 11 Connecting rod bolts, identification/ tightening procedure

stretch		rigid
25mm (1.0 in.) smooth conical	**A** = thread length **B** = center part **C** = bolt head	15 mm (9/16 in.) serrated half round

Tightening procedure

stretch bolt:
— lubricate contact face of nut
— tighten to 30 Nm (22 ft lb)
— then tighten nut ¼ turn (90°) more

rigid bolt:
— lubricate contact face of nut
— tighten to 45 Nm (33 ft lb)

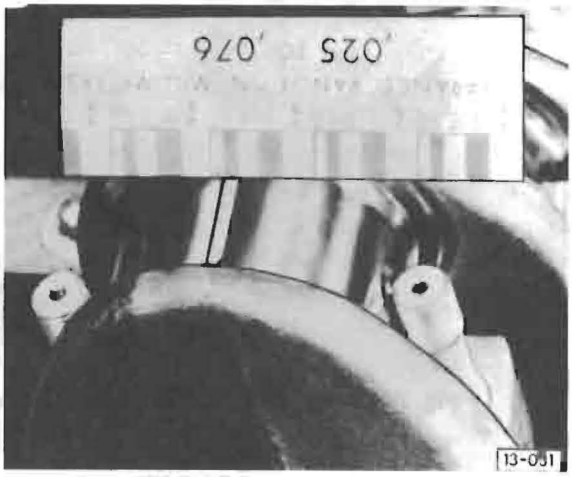

Fig. 12 Connecting rod bearing clearance, checking

— remove connecting rod cap
— clean bearing shell and crankshaft journal
— place Plastigage® across journal
— install cap and tighten nuts
- if rigid bolts, tighten nuts to 45 Nm (33 ft lb)
- if stretch bolts, tighten nuts to 30 Nm (22 ft lb) (to avoid stretching bolts, do **not** turn stretch bolt nuts extra quarter turn when measuring bearing clearance)

CAUTION
Do not turn crankshaft

— remove connecting rod cap
— compare width of strip with measuring scale; figure on scale gives bearing clearance
- new part: 0.028–0.088 mm (0.0011–0.0034 in.)
- wear limit: 0.12 mm (0.0047 in.)

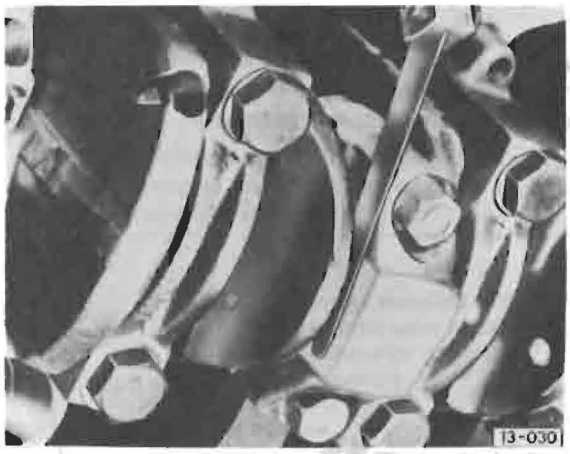

Fig. 13 Connecting rod side clearance, checking
wear limit: 0.37 mm (0.014 in)

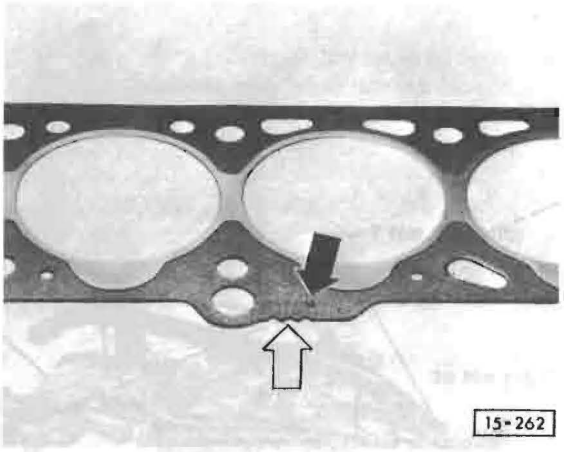

Fig. 15 Cylinder head gasket, identification

white arrow = identification notches
black arrow = part number

Note

Always select gasket thickness according to piston height above top of cylinder block

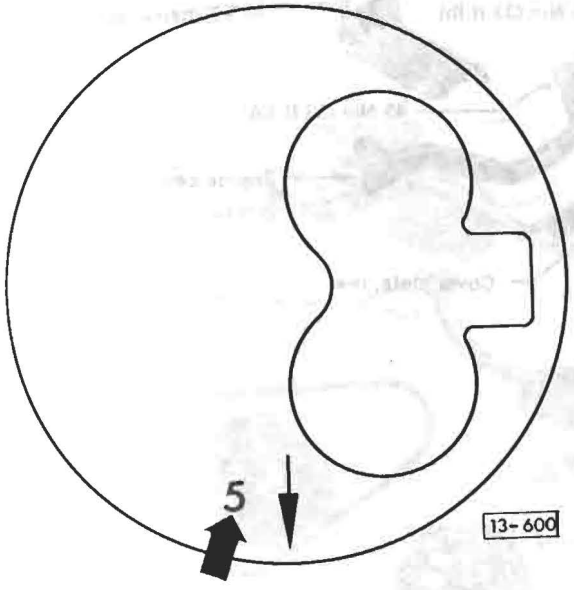

Fig. 14 Piston identification

- pistons are marked with figure **5** next to installation direction
- arrow must point to drive belt side

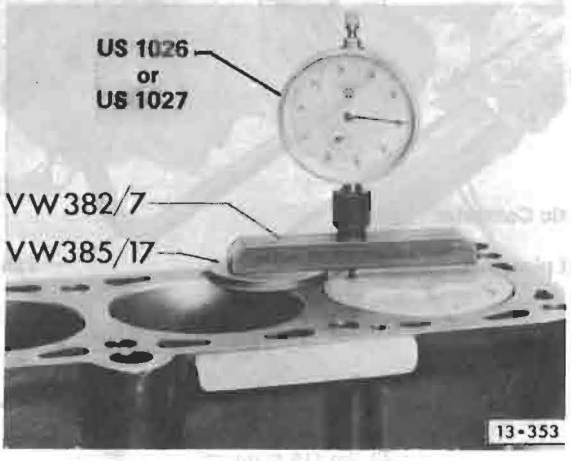

Fig. 16 Piston height, checking

Piston height of **ALL** cylinders must be measured when installing new pistons or short block.

Head gasket is selected based on cylinder with **HIGHEST** piston height.

Thickness of gasket (mm/in.)	Piston height (mm/in.)	Identification notches in head gasket	Part No.
0.63-0.82 (0.025-0 032)	1.4 (0.055)	1	068 103 383 L
0.83-0.92 (0.033-0.036)	1.5 (0.059)	2	068 103 383 M
0.93-1.02 (0.037-0.040)	1.6 (0.063)	3	068 103 383 N

Note

Arrows on carrier must point to front of vehicle when reinstalling. Remove carrier as complete assembly

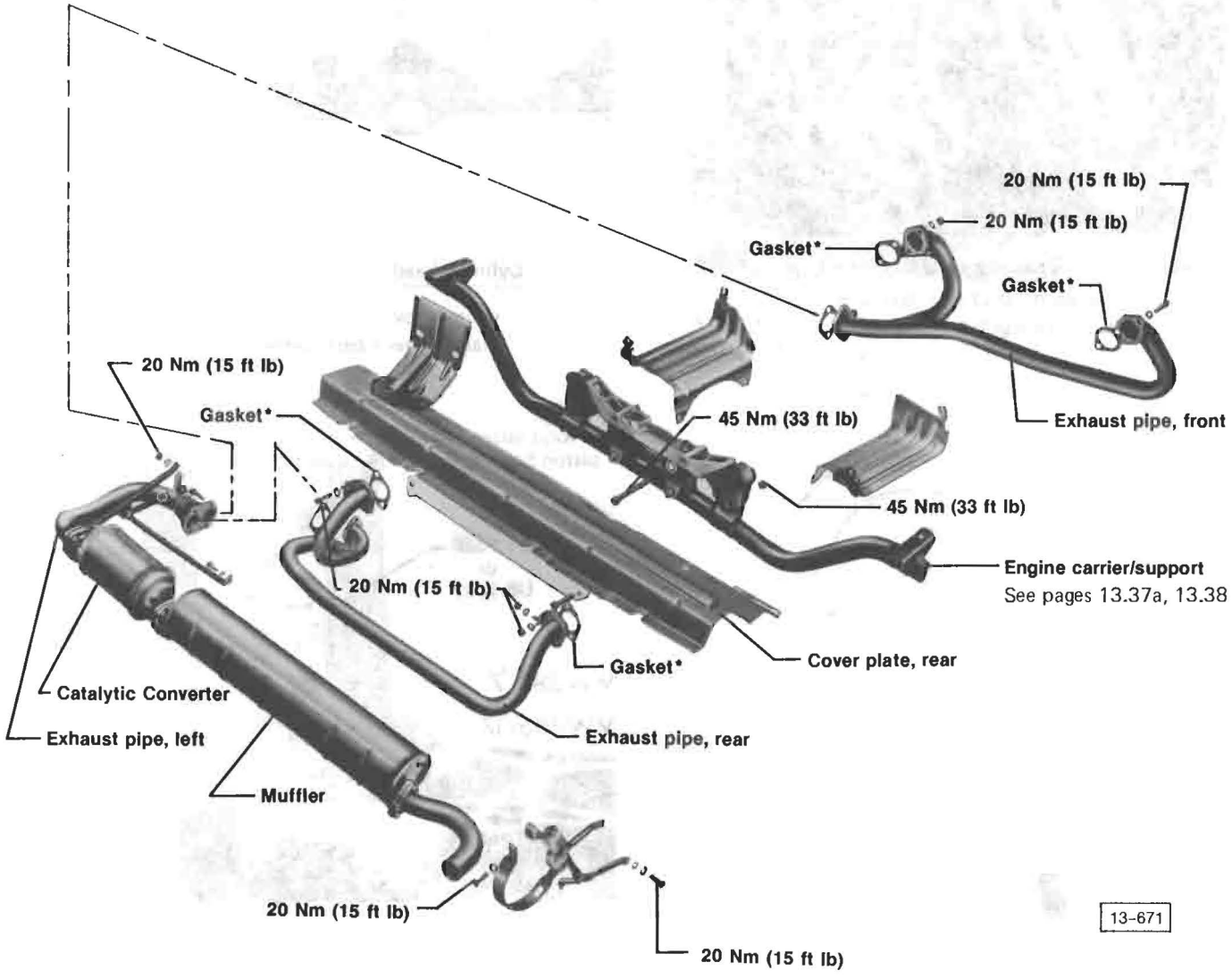

*metal surface faces cyl. head

Note

Tighten all hoses with hose clamps

CAUTION

Coolant/antifreeze **must not** be reused when replacing engine, cylinder head, cylinder head gasket, radiator and heater core.

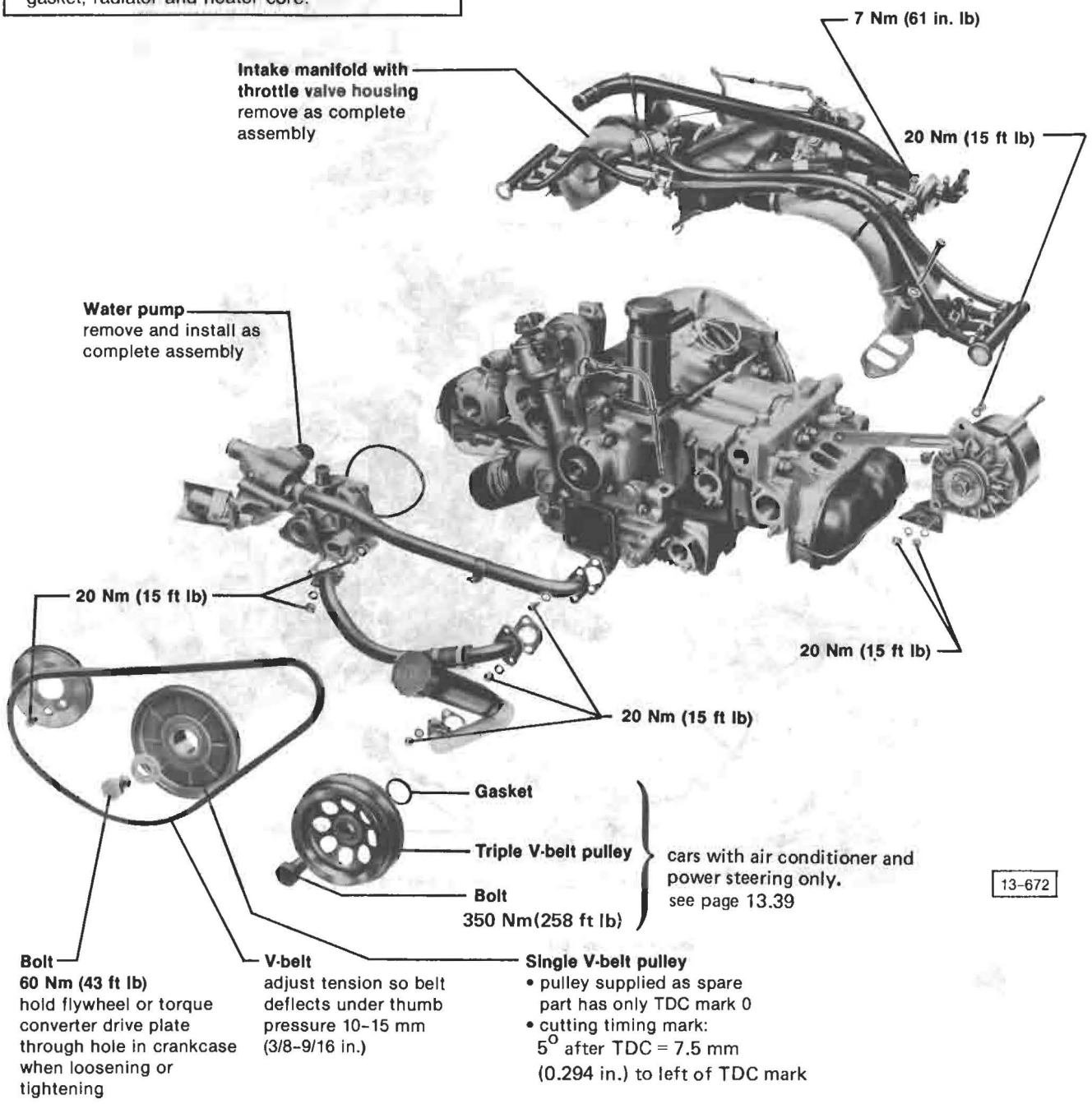

CAUTION

Coolant/antifreeze **must not** be reused when replacing engine, cylinder head, cylinder head gasket, radiator and heater core.

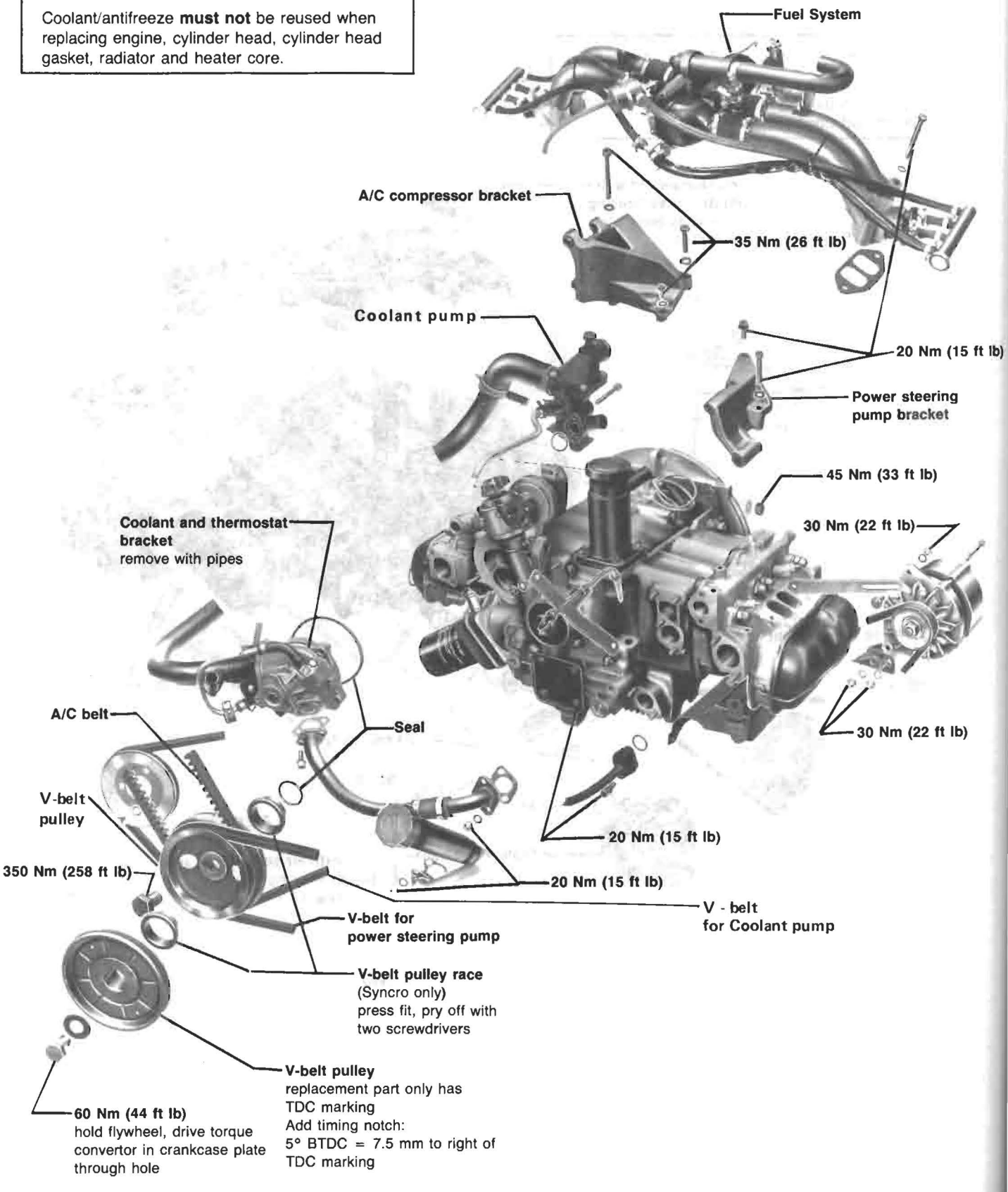

Removal of three groove pulley

Retainer tool 3149 is required to hold crankshaft from rotating while removing/installing the three groove pulley.

It consists of three separate pieces:
- alignment plate
- pad
- socket and handle

Work sequence

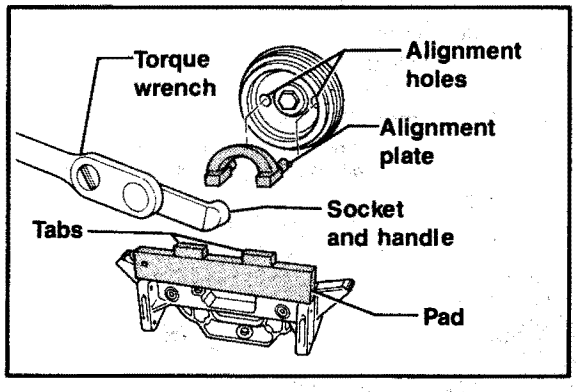

— loosen power steering pump, if applicable, remove V-belt from crankshaft pulley
— loosen A/C compressor, if applicable, remove V-belt from crankshaft pulley
— loosen alternator, remove V-belt from crankshaft pulley
— unscrew coolant expansion tank, lay to one side
— remove expansion tank bracket
— remove retaining screws and bolts from exhaust heat shield
— reposition heat shield down and under its original position

Note

When tool 3149 is used, it will **not** be necessary to remove muffler.

— rotate pulley so both **alignment holes** are horizontal
— insert **alignment plate** into pulley

— place pad across engine mounts with tabs pointing upward
— attach socket and handle
— remove crankshaft pulley bolt and pulley
— installation of three groove pulley is in reverse order

CAUTION

Tightening torque applies **only** when socket and handle is used in alignment with torque wrench.

Correct torque wrench setting **must be calculated** to achieve 350 Nm (258 ft lb) at crankshaft pulley bolt.

— torque crankshaft pulley bolt to 350 Nm (258 ft lb)

How to compute torque when using adapter

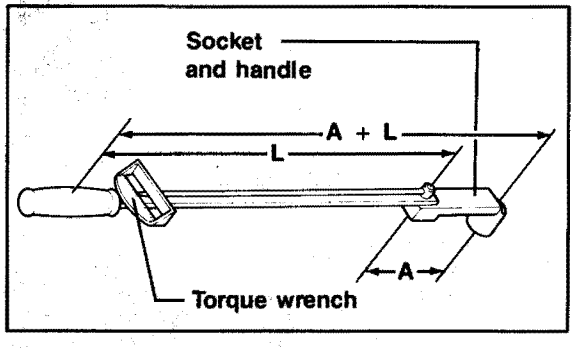

$$TA = \frac{TW \times (L + A)}{L}$$ where:

TA = Torque at end of adapter
TW = Torque wrench scale reading
L = Lever length of torque wrench
A = Lever length of adapter

Example:
TA = Unknown
TW = 100 lb.-ft.
L = 15 inches
A = 7.5 inches

Now use the formula as follows:

$$TA = \frac{TW \times (L + A)}{L}$$

$$TA = \frac{100 \times (15 + 7.5)}{15}$$

$$TA = \frac{100 \times (22.5)}{15}$$

$$TA = \frac{2250.0}{15}$$

TA = 150 ft.-lb.

— adjust all belts to specification
— top off coolant level in expansion tank

CAUTION

When assembling crankcase halves, see Fig. 5

CAUTION

Coolant/antifreeze **must not** be reused when replacing engine, cylinder head, cylinder head gasket, radiator and heater core.

When replacing coolant/antifreeze solution in all Volkswagen models, all model years, use phosphate-free coolant/antifreeze **ZVW 237 102.**

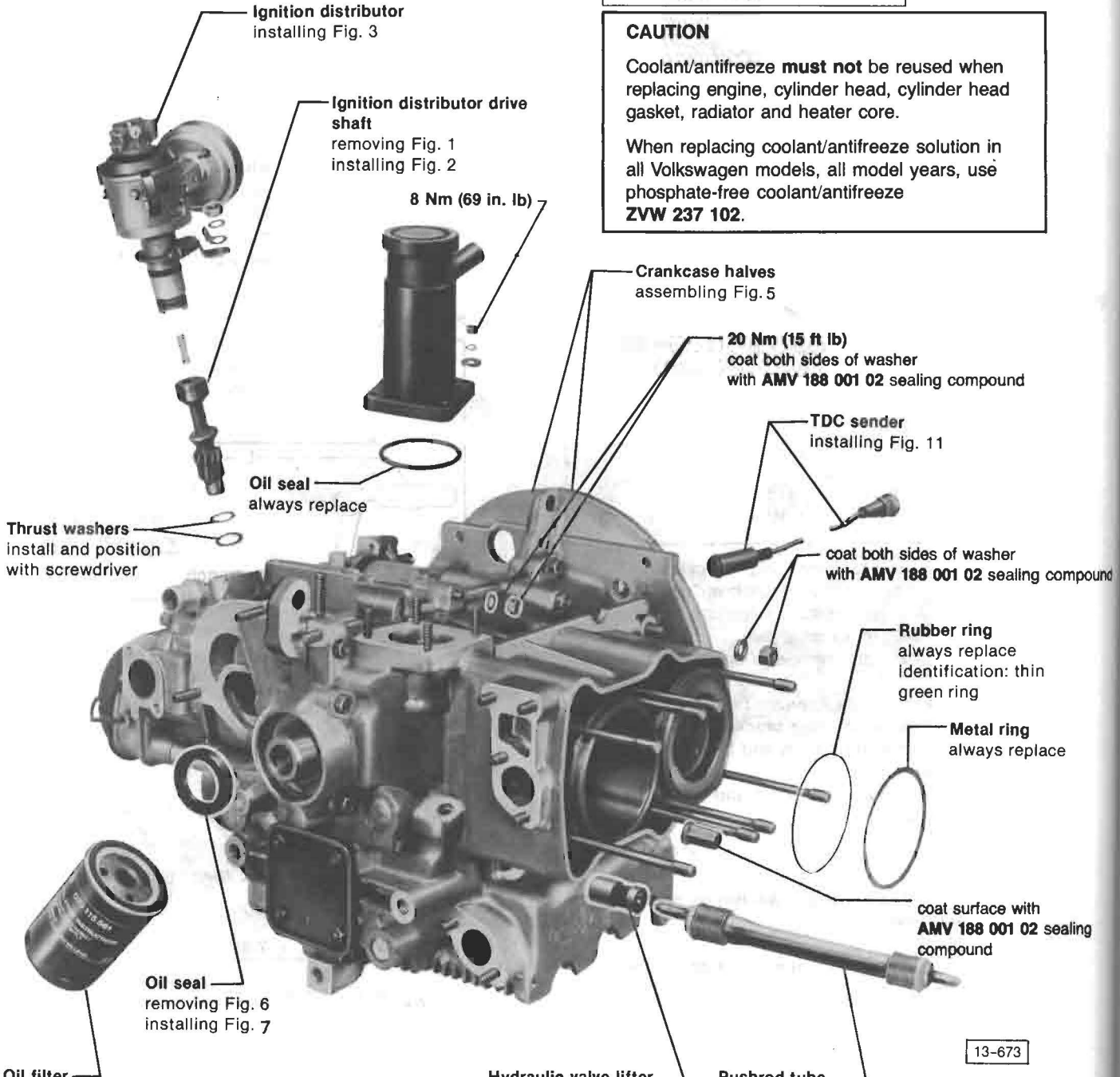

Oil filter
note instructions on filter or box.
Remove with US 4462

Note

from 1986 oil cooler added
see Group 17, pg. 17.7

Hydraulic valve lifter
do not interchange positions.
Store vertical, base downward
repairing, see Repair Group 15

Pushrod tube
seam faces up.
Always replace pushrod tube seals.
Tube can be replaced with cyl. head installed, see Repair Group 15
Preloading and repairing, see Repair Group 15

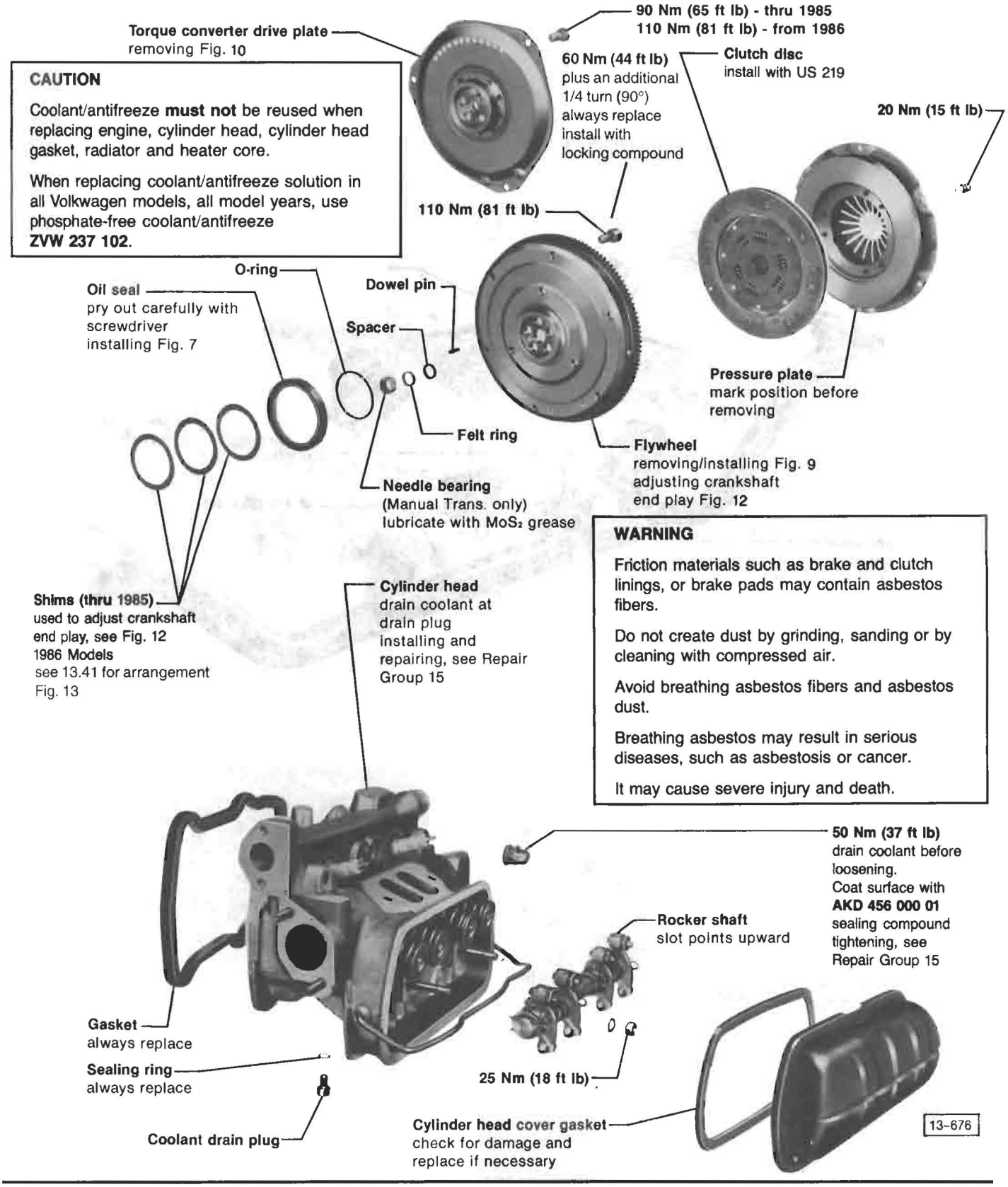
Torque converter drive plate
removing Fig. 10
90 Nm (65 ft lb) - thru 1985
110 Nm (81 ft lb) - from 1986
60 Nm (44 ft lb)
plus an additional
1/4 turn (90°)
always replace
install with
locking compound
Clutch disc
install with US 219
20 Nm (15 ft lb)
110 Nm (81 ft lb)
CAUTION
Coolant/antifreeze must not be reused when replacing engine, cylinder head, cylinder head gasket, radiator and heater core.
When replacing coolant/antifreeze solution in all Volkwagen models, all model years, use phosphate-free coolant/antifreeze ZVW 237 102.
O-ring
Oil seal
pry out carefully with
screwdriver
installing Fig. 7
Dowel pin
Spacer
Felt ring
Needle bearing
(Manual Trans. only)
lubricate with MoS2 grease
Pressure plate
mark position before
removing
Flywheel
removing/installing Fig. 9
adjusting crankshaft
end play Fig. 12
Shims (thru 1985)
used to adjust crankshaft
end play, see Fig. 12
1986 Models
see 13.41 for arrangement
Fig. 13
Cylinder head
drain coolant at
drain plug
installing and
repairing, see Repair
Group 15
WARNING
Friction materials such as brake and clutch linings, or brake pads may contain asbestos fibers.
Do not create dust by grinding, sanding or by cleaning with compressed air.
Avoid breathing asbestos fibers and asbestos dust.
Breathing asbestos may result in serious diseases, such as asbestosis or cancer.
It may cause severe injury and death.
50 Nm (37 ft lb)
drain coolant before
loosening.
Coat surface with
AKD 456 000 01
sealing compound
tightening, see
Repair Group 15
Rocker shaft
slot points upward
Gasket
always replace
Sealing ring
always replace
Coolant drain plug
25 Nm (18 ft lb)
Cylinder head cover gasket
check for damage and
replace if necessary
13-676

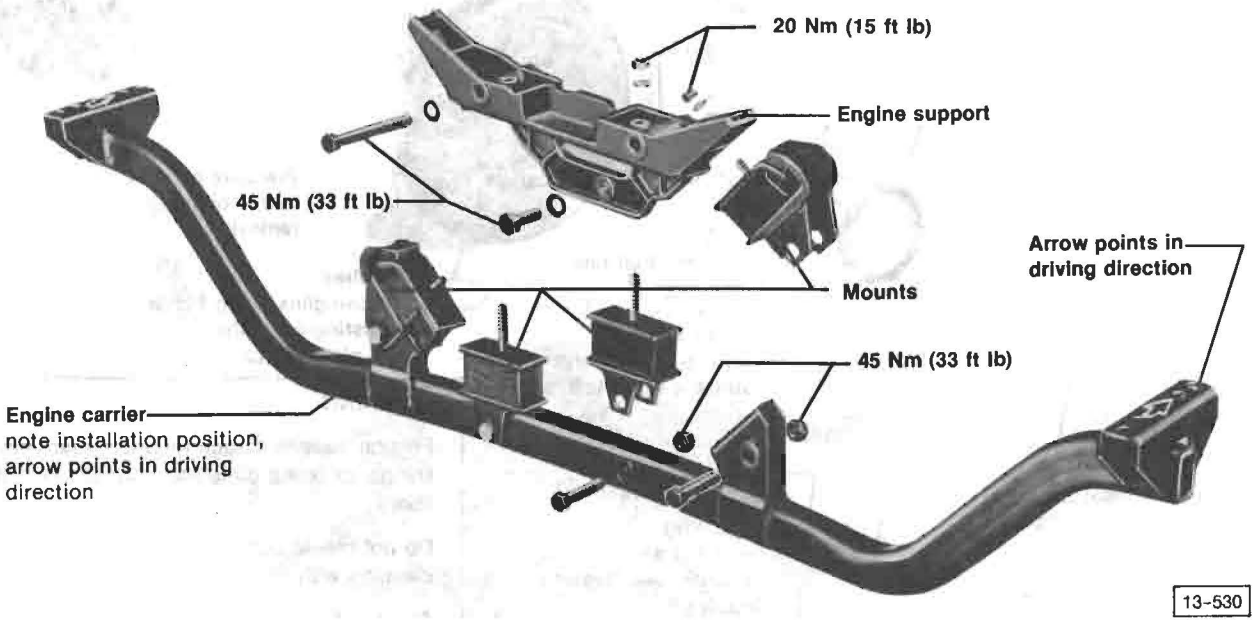
20 Nm (15 ft lb)
Engine support
45 Nm (33 ft lb)
Arrow points in driving direction
Mounts
45 Nm (33 ft lb)
Engine carrier
note installation position, arrow points in driving direction
13-530

Engine mount/mount bracket can be removed/installed with engine in vehicle.

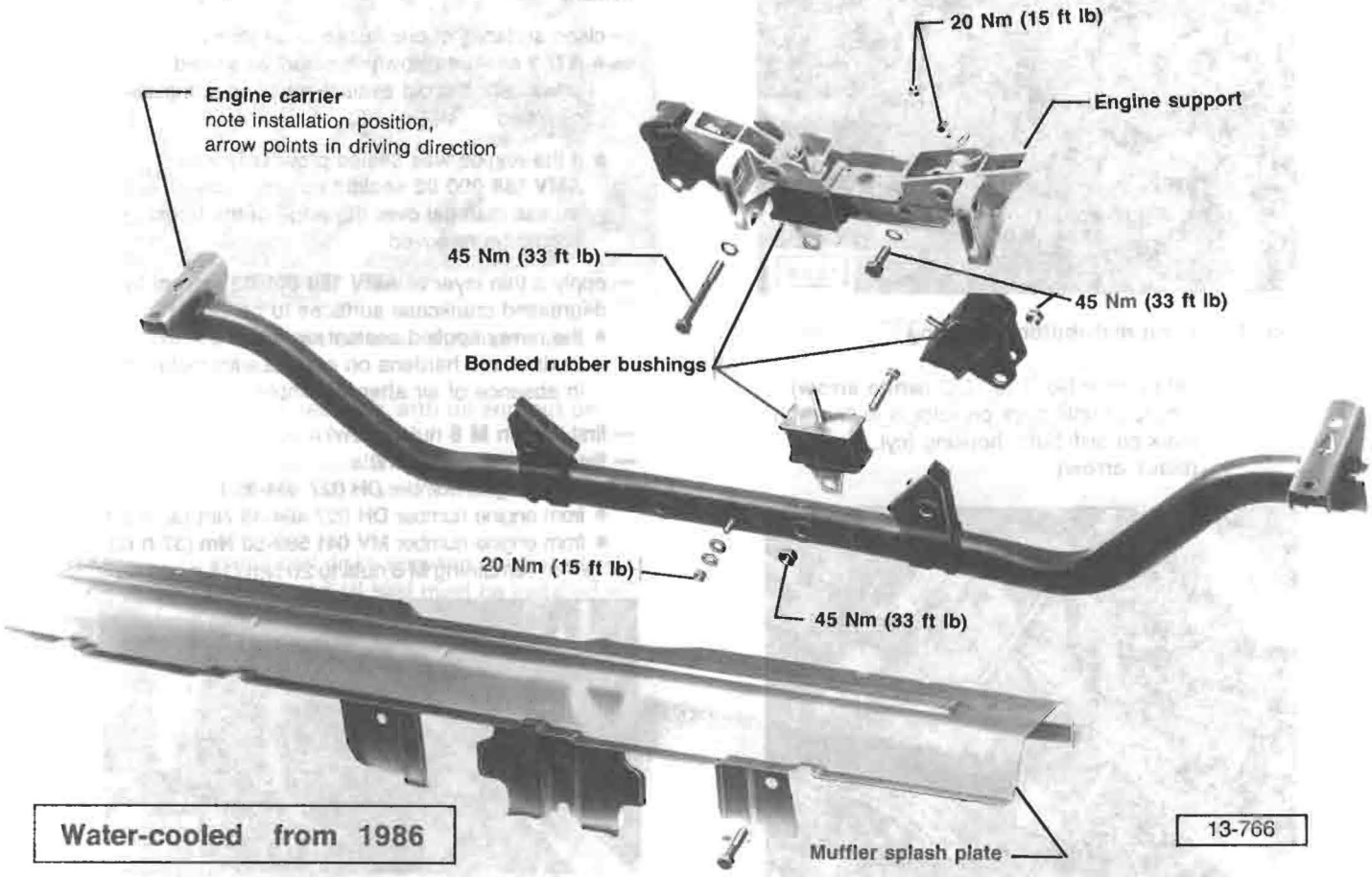

Water-cooled from 1986

Engine, disassembling/assembling —All-water-cooled

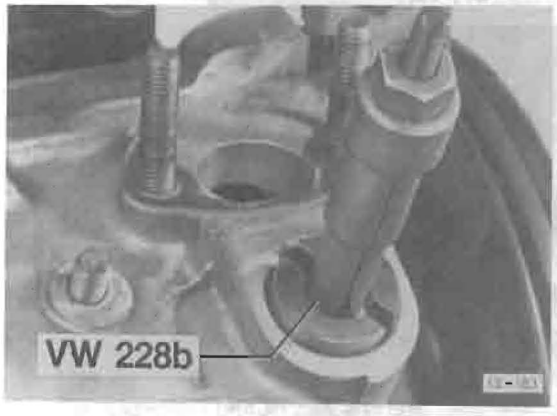

Fig. 1 Ignition distributor drive shaft, removing

— use puller as shown

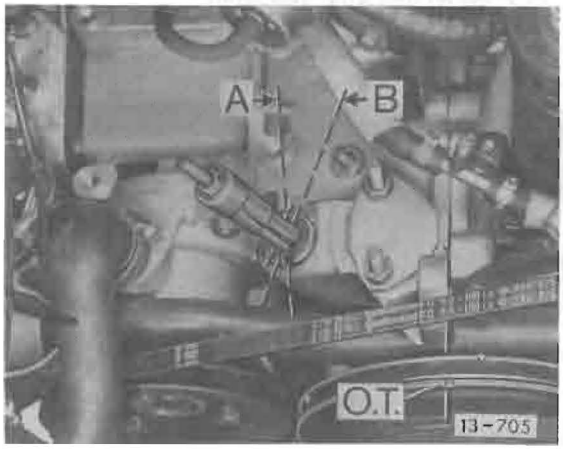

Fig. 2 Ignition distributor drive shaft, installing

— set crankshaft to TDC on cyl. No. 1
— install drive shaft so that offset slot faces bolt (arrow)
— small segment faces water pump

A = inserted position
B = installed position

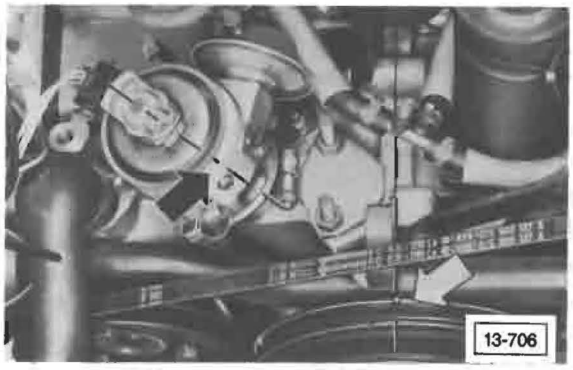

Fig. 3 Ignition distributor, installing

—set cylinder No. 1 to TDC (**white arrow**)
—turn rotor until mark on rotor is in line with mark on distributor housing (cyl. No. 1) (**black arrow**)

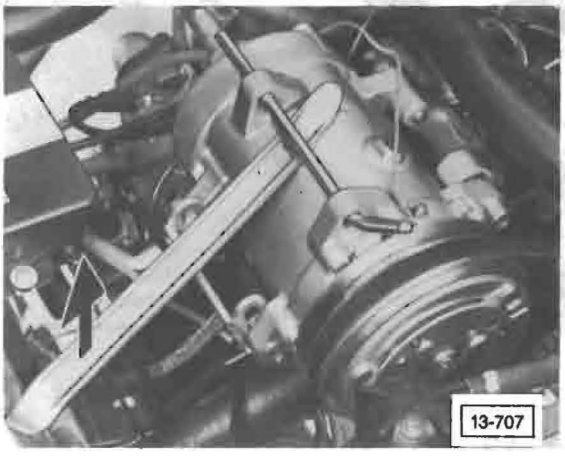

Fig. 4 A/C compressor V-belt, tightening (if applicable)



Fig. 5 Crankcase halves, assembling

Note

AMV 188 001 02 sealant is now being used when assembling crankcase halves.

When repairing engines, use only **AMV 188 001 02** sealant.

— clean surfaces of crankcase to be joined
- if **D 3** sealant (brownish color) was used previously, the old sealant **must** be completely removed
- if the engine was sealed previously with **AMV 188 000 02** sealant (green colored), only excess material over the edge of the housing should be removed

— apply a thin layer of **AMV 188 001 02** sealant to degreased crankcase surfaces to be joined
- the newly applied sealant dissolves the old sealant and hardens on contact with metal and in absence of air after assembly

— first tighten **M 8** nut (**arrow**)
— then tighten all **M 10** nuts
- up to engine number **DH 027 404-35 Nm (26 ft lb)**
- from engine number **DH 027 404-45 Nm (33 ft lb)**
- from engine number **MV 041 599-50 Nm (37 ft lb)**

— tighten remaining **M 8** nuts to 20 Nm (15 ft lb)



Fig. 6 Crankshaft oil seal, removing

— pry out

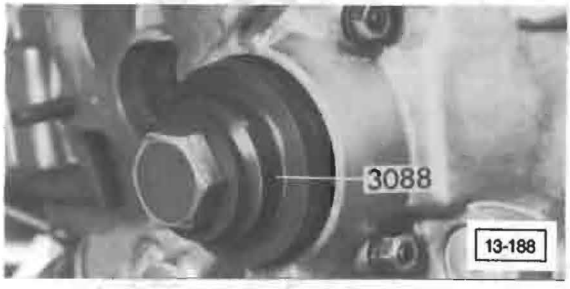

Fig. 7 Crankshaft oil seals, installing

Single pulley
— coat seal lips with oil and install seal with **3088** and pulley bolt without washer (**3162** in Syncro)
— then tighten bolt **with washer** until stop

Triple pulley
— coat seal lips with oil and install with **3088** and pulley bolt **without washer** and tighten bolt until stop

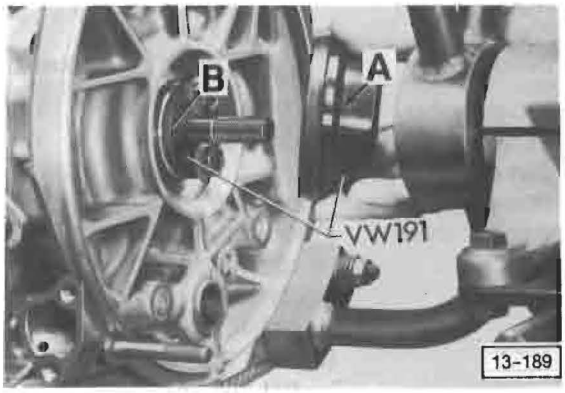

Fig. 8 Crankshaft oil seal (flywheel side), installing

— coat seal lips with oil and put on guide **A**
— screw base **B** into crankshaft and press in guide **A** with seal until seated

shims and disks between crankshaft bearing and oil seal must be installed in correct order. See Fig. 13.

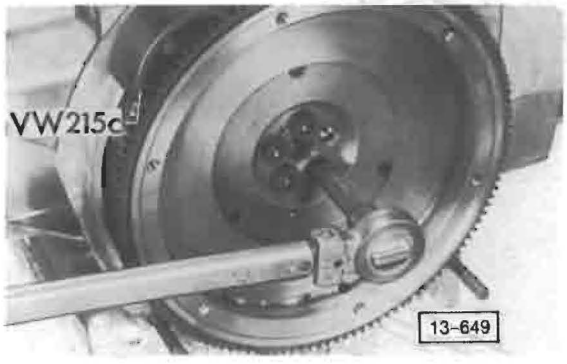

Fig. 9 Flywheel, removing

— lock flywheel with tool

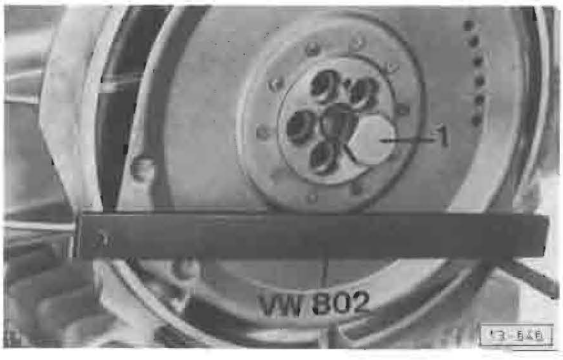

Fig. 10 Torque converter drive plate, removing

— lock plate with VW 802
— to remove, screw in bolt **1** (M 18 x 1.5 x 60). Thread length of bolt must be at least 45 mm (1.77 in.)

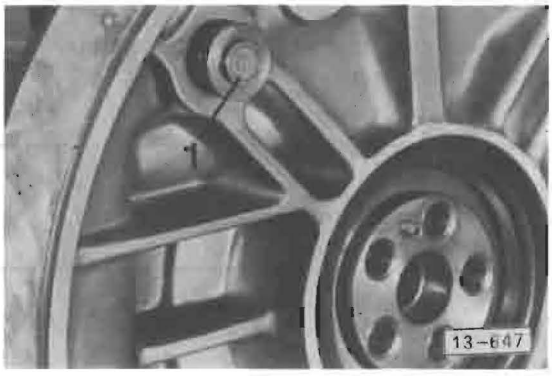

Fig. 11 TDC sender, installing

— use piston pin and plastic hammer to drive TDC sender in until stop
— do not damage inner ring **1**

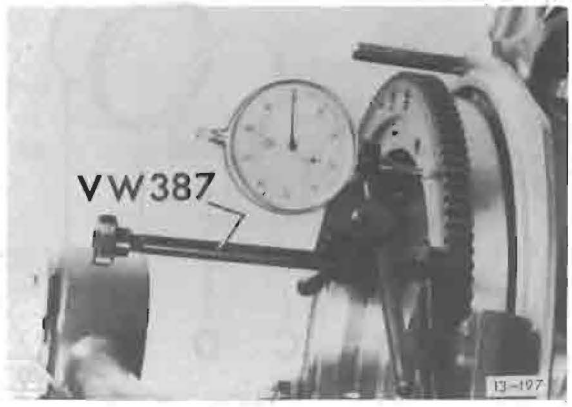

Fig. 12 Crankshaft end play, checking/adjusting

— check crankshaft end play
  • new: 0.07-0.13 mm (0.003-0.005 in.)
  • wear limit: 0.15 mm (0.006 in.)
— if out of specification proceed as follows:
— install flywheel with **2** shims but **without** O-ring and crankshaft oil seal
— mount dial indicator with bracket on crankcase
— move crankshaft in and out and measure movement (crankshaft end play)
— determine thickness of **3rd** shim

Example

dial indicator reading	0.44 mm (0.017 in.)
specified end play	– 0.10 mm (0.004in.)
thickness of **3rd** shim	0.34 mm (0.013 in.)

Shims C on vehicles from 1986, see Fig. 13

go to next page

Note

Thickness of shim is etched on shim. Always recheck with micrometer

CAUTION

Always install **three** shims to obtain correct crankshaft end play

— remove flywheel
— install O-ring, crankshaft oil seal and felt ring
— install all three shims

— install flywheel
— tighten bolts to 60 Nm (44 ft lb) plus an add'l 1/4 turn (90°)
— recheck crankshaft end play

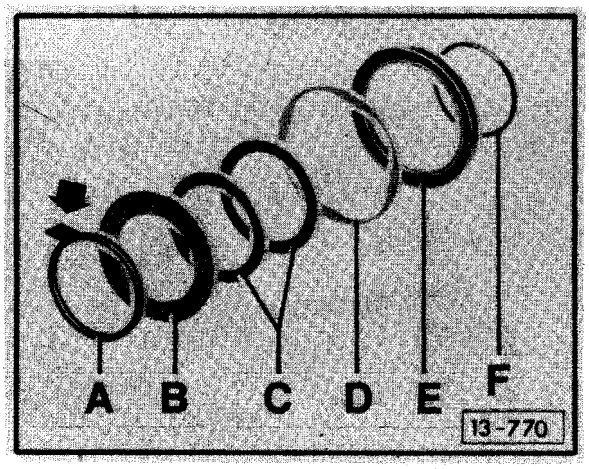

Fig. 13 Shim arrangement (from 1986)
A = Thrust washer
• lip points toward crankshaft bearing
B = 0.81 mm shim
C = 0.75 mm shims
D = 0.94 mm
E = Oil seal
• pry out with screwdriver
F = O-ring
• always replace

Apply light film of oil on **both** sides of thrust washer **A**.
Install with lip (arrow) pointing **toward** crankshaft bearing
— press shim **B** to **A**
— install flywheel **without** O-rings, **E, F**
— mount dial indicator with bracket on crankcase
Proceed to determine thickness of shim **C** (see fig. 12)
— remove flywheel
— install shims **C, D,** and oil seal **E**
— install flywheel with **F**
— tighten bolts to 60 Nm (44 ft lb) plus an add'l 1/4 turn (90°)
— recheck crankshaft end play

Parts required

Description	Part no.	Quantity
Thrust washer	025 105 283	1
81.0mm (3.2 in.) diameter shim	025 105 281	1
75.0mm (3.0 in.) diameter shims	021 105 281 (0.30mm thickness)	2
	021 105 283 (0.32mm thickness)	
	021 105 285 (0.34mm thickness)	
	021 105 287 (0.36mm thickness)	
	021 105 289 (0.38mm thickness)	
	021 105 291 (0.24mm thickness)	
94.0mm (3.7 in.) diameter shim	025 105 635	1
Oil seal	029 105 245 B	1
O-ring	021 105 279	1

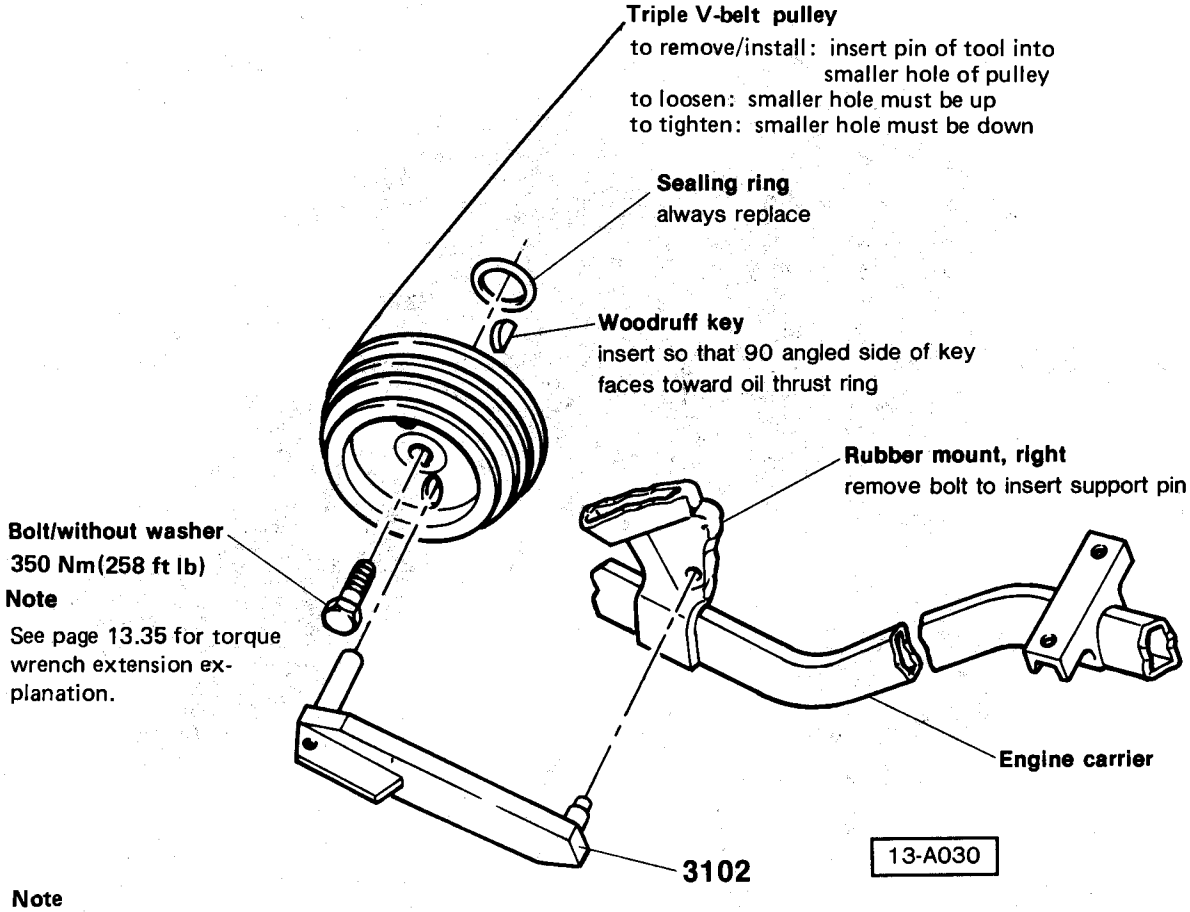

Note

Triple V-belt pulleys supplied as spare parts have only TDC mark 0. Cut timing mark same as single V-belt pulley, see page 13.33

Note

Remove deposits (scale) from cylinders/crankcase and cylinder head

Note

Before proceeding with repairs, verify availability of all tools.

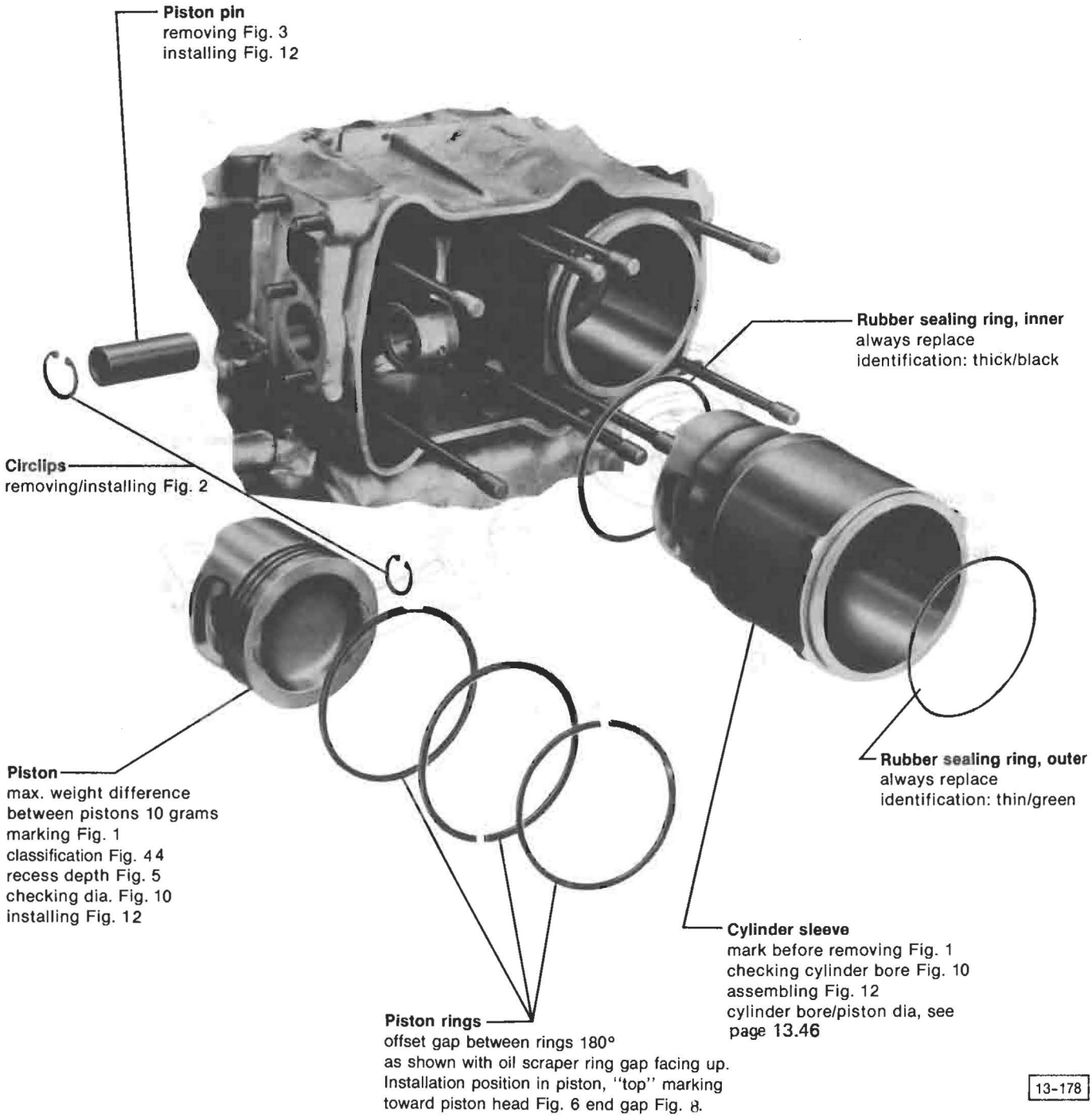

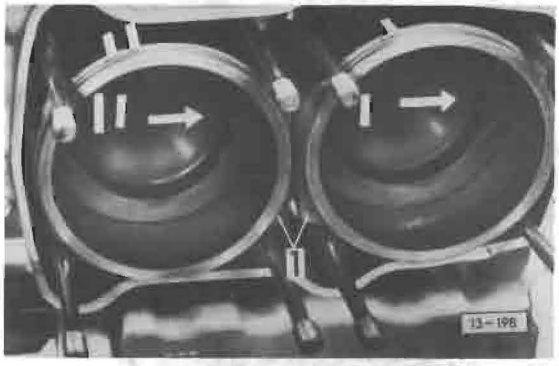

Fig. 1 Piston/cylinder sleeve, marking

- arrow points to flywheel
- before removing, mark matching numbers on pistons and cylinder sleeves
- cylinder boss 1 faces inward

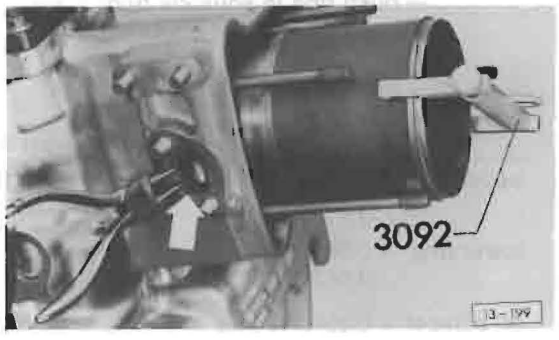

Fig. 2 Circlips, removing/installing

on V-belt side:

- with piston at TDC, pull out cylinder sleeve with 3092 until piston pin circlip visible (arrow)

at flywheel end:

- with first cylinder sleeve removed



Fig. 3 Piston pins, removing

- remove pins as shown (arrow)

Note

If piston pin cannot be pulled out of piston, remove 3091 and remove burr in piston pin bore with reamer 3159.



Fig. 4 Piston classifications

A = arrow (stamped on) must point toward flywheel when piston is installed
B = paint dot (blue) indicates matching size
C = weight group (+ or −) stamped on
− weight = 448–456 grams
+ weight = 457–464 grams
D = piston size in millimters (see table on page 13.46)

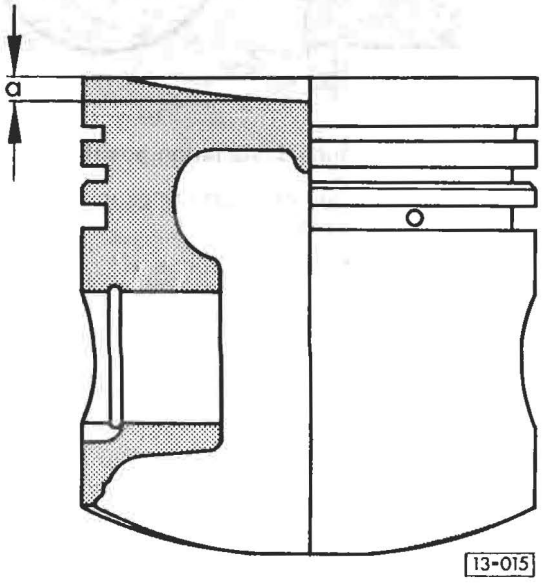

Fig. 5 Piston recess depth

- measurement **a** = 11.65 mm (0.458 in.)

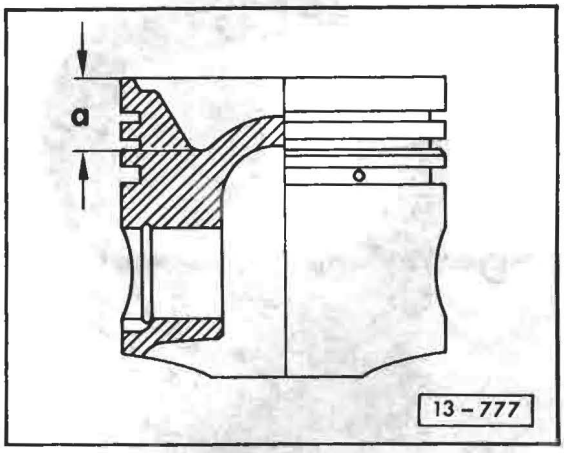

Fig. 6 Piston distinguishing characteristics - 2.1 L Digifant/Syncro only

engine code	dimension 'a'
MV	15.5 mm

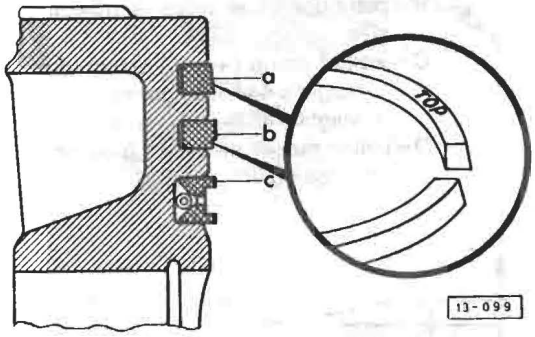

Fig. 7 Piston rings, installation position

- **TOP** mark on piston rings must face to top of piston

a = upper ring
b = lower ring
c = oil scraper ring



Fig. 8 Piston ring end gap, checking

— push ring in squarely from lower cylinder opening about 4-5 mm (3/16 in.)
— measure gap with feeler gauge

	ring end gap	wear limit
upper ring =	0.30-0.45 mm (0.012-0.018 in.)	0.90 mm (0.035 in.)
lower ring =	0.30-0.50 mm (0.012-0.020 in.)	0.90 mm (0.035 in.)
oil scraper ring =	0.25-0.40 mm (0.010-0.016 in.)	0.95 mm (0.037 in.)



Fig. 9 Piston ring side clearance, checking

	clearance	wear limit
upper ring =	0.05-0.08 mm (0.002-0.003 in.)	0.12 mm (0.005 in.)
lower ring =	0.04-0.07 mm (0.002-0.003 in.)	0.10 mm (0.004 in.)
oil scraper ring =	0.02-0.05 mm (0.001-0.002 in.)	0.10 mm (0.004 in.)



Fig. 10 Piston, checking diameter/wear

— measure at bottom of skirt approx. 15 mm (9/16 in.) from edge (diameter stamped in top of piston)

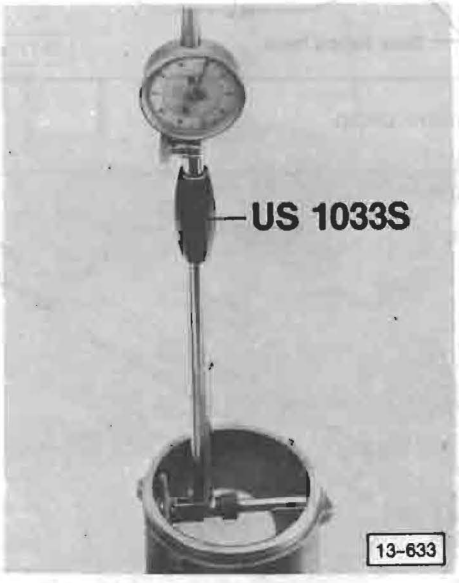

Fig. 11 Cylinder sleeve, checking for wear

— measure 10-16 mm (3/8-5/8 in.) from top
- piston to sleeve clearance is sleeve diameter minus piston diameter

new = 0.03-0.06 mm (0.001-0.002 in.)
wear limit = 0.2 mm (0.008 in.)

Cylinder sleeve bore/Piston diameter

size	color	cylinder diameter	matching piston diameter
standard	blue	94.005-94.016 mm	93.98 mm
1st oversize	pink	94.016-94.027 mm	93.99

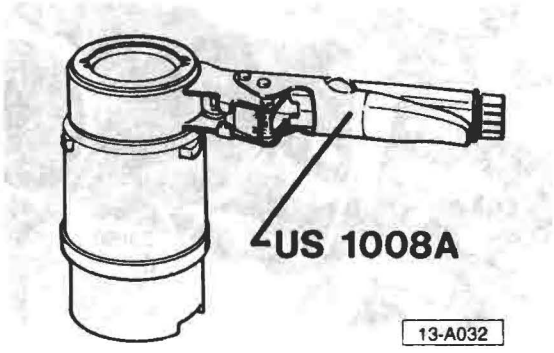

Fig. 12 Piston and cylinder sleeve, installing

— replace rubber sealing rings for cylinder sleeves:
- cylinder head end = thin ring (green)
- crankcase end = thick ring (black)

— install piston into cylinder sleeve (flywheel side first)
- arrow on piston points toward flywheel
- gap of oil scraper ring must be to top
- piston ring gaps offset by 180° (see explosion view)

— insert circlip for piston pin on flywheel side of piston

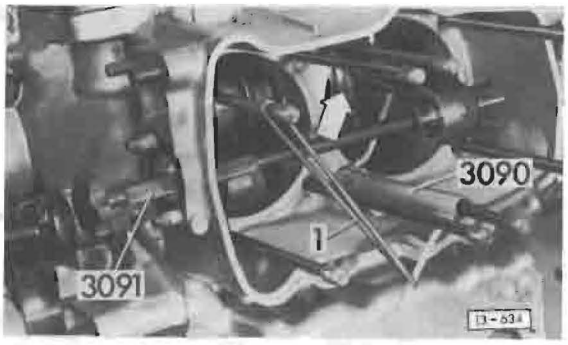

Fig. 13 Piston and cylinder sleeve, installing

— note markings on connecting rod support 3090
- R = right side of engine
- L = left side of engine

— push connecting rod support onto center stud so finger of tool supports connecting rod; then secure it with rubber band 1 to prevent it from slipping

— align connecting rod such that piston pin can be installed through hole in housing
- crankshaft must be at TDC
- lug on rod faces up

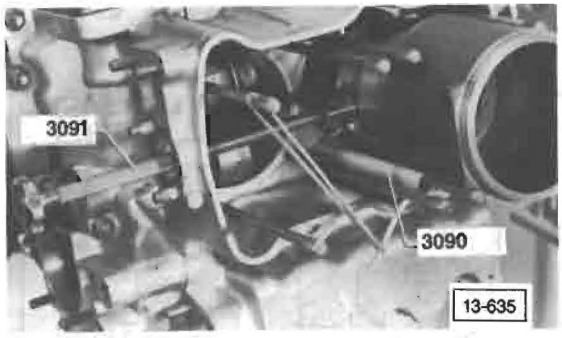

Fig. 14 Piston and cylinder sleeve, installing

— install piston pin with **3091** and insert circlip

Piston pin hole burrs, removing

If a burr has formed in the outer piston pin hole from the pin striking against the circlip, the burr must be removed with reamer **3159** before you remove the piston pin.

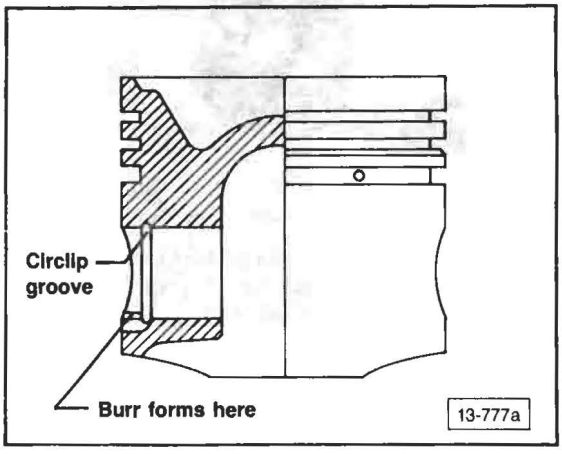

— remove circlip

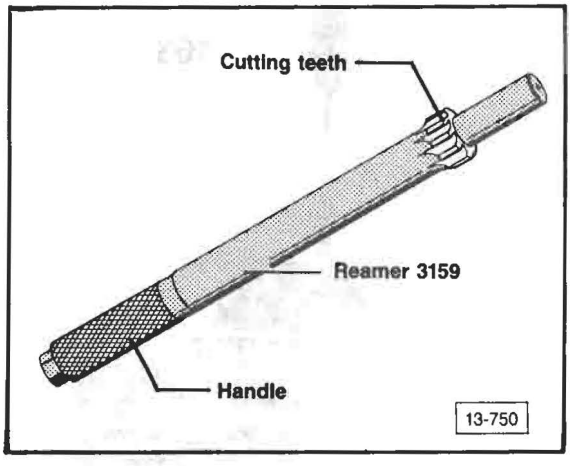

— insert reamer **3159** into piston pin hole
— remove burr with reamer
— remove piston pin with tool **3091**

CAUTION

When assembling crankcase halves, observe tightening sequence and tightening torque (see page 13.36 and page 13.39, Fig. 5)

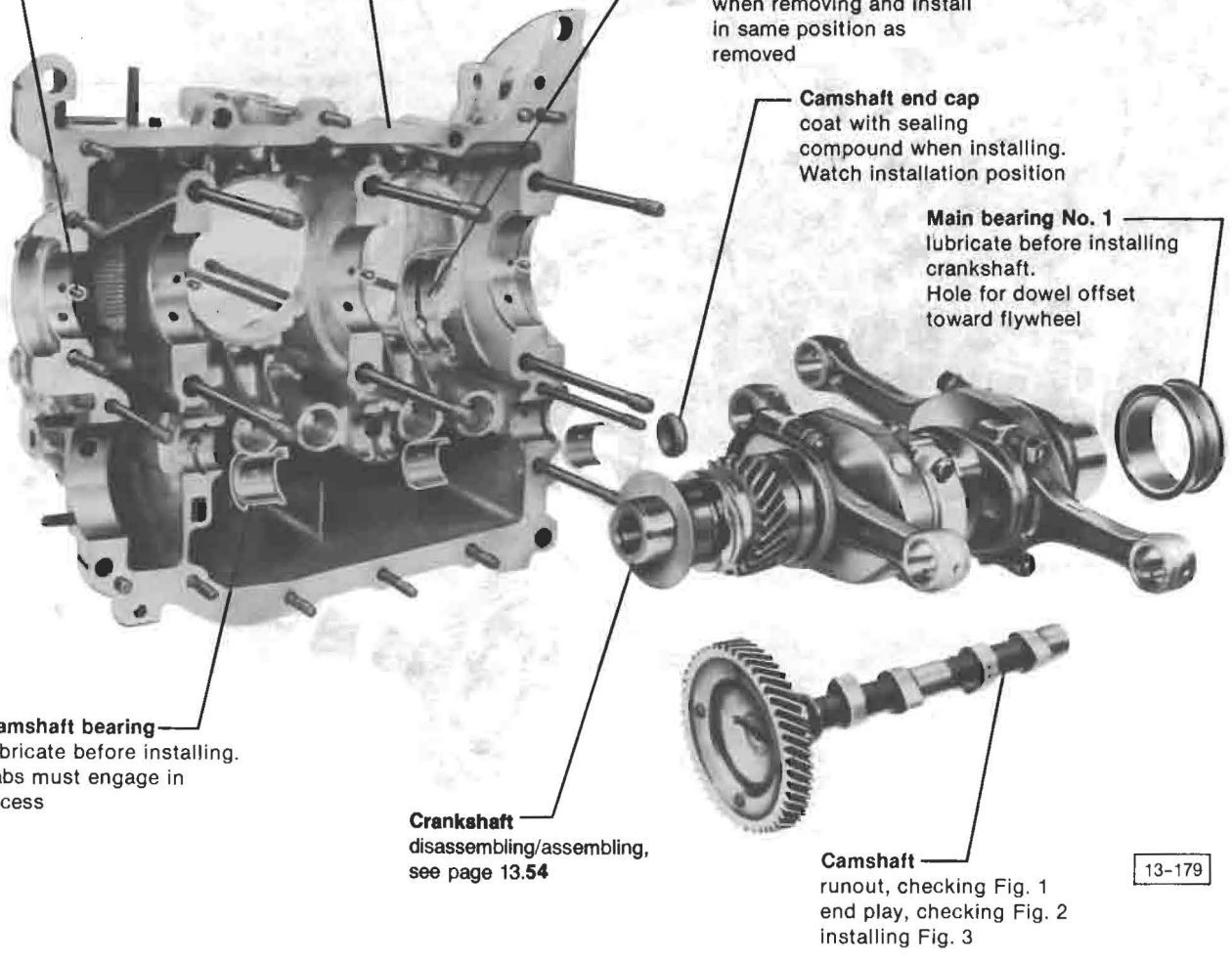

CAUTION

When assembling crankcase halves, observe tightening sequence and tightening torque.

Oil pickup line with filter screen. Fig. 4

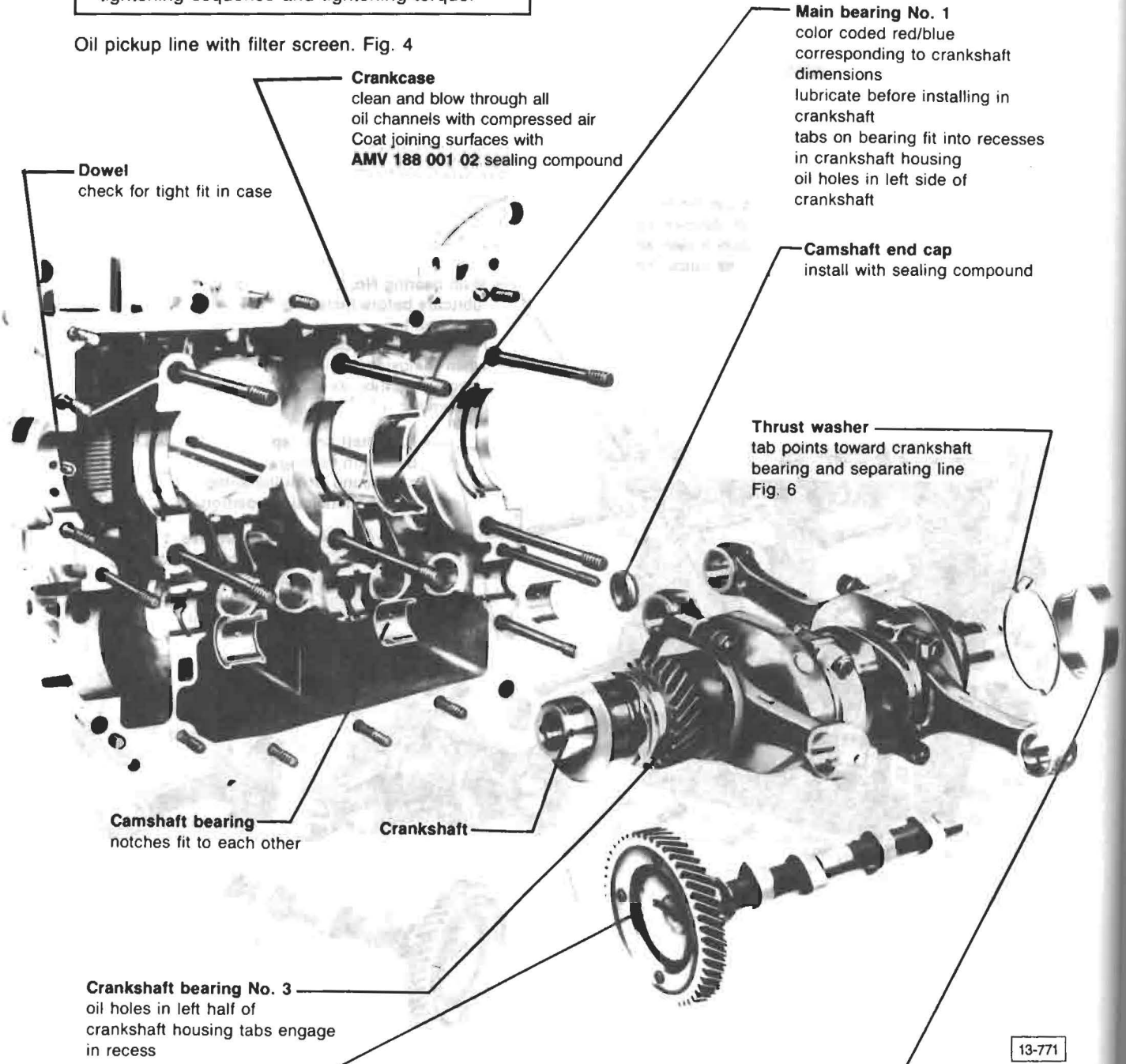

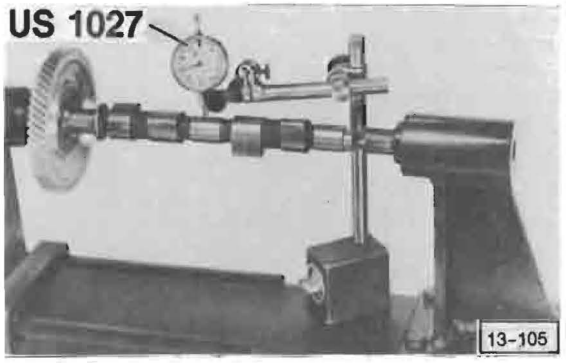

Fig. 1 Camshaft runout, checking

- wear limit 0.04 mm (0.0015 in.)

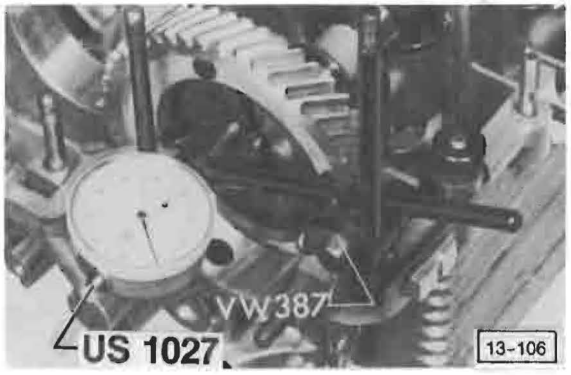

Fig. 2 Camshaft end play, checking

- wear limit 0.16 mm (0.006 in.)
- if out of specification, replace camshaft bearings

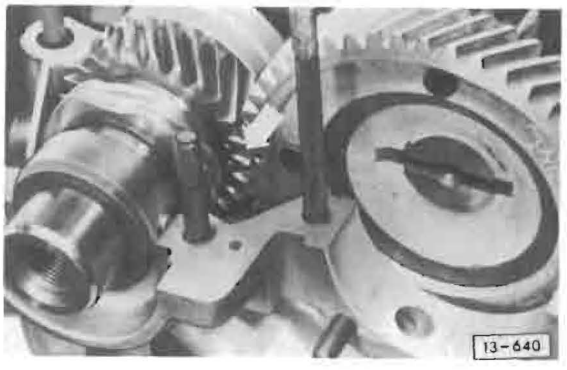

Fig. 3 Camshaft, installing

— mark on camshaft gear tooth must be between marks on crankshaft gear teeth (arrow)
— check backlash of timing gears
- 0.0-0.05 mm (0-0.002 in.)
- backlash must be hardly noticeable

— turn crankshaft **backward**
- camshaft **must** not lift out of bearings
- if camshaft lifts out of bearings, install camshaft with smaller timing gear

Note

To obtain specified backlash, camshafts with various size timing gears are available. Markings are on **inner** face of timing gear

Example
"−0.1", "+0.1", "+0.2", indicates in 1/100 mm how much pitch radius differs from standard pitch radius "0"

CAUTION

Mark **0** on **outer** face of camshaft timing gear is timing mark and must not be confused with markings on **inner** face. Crankshaft timing gear is available in one size only

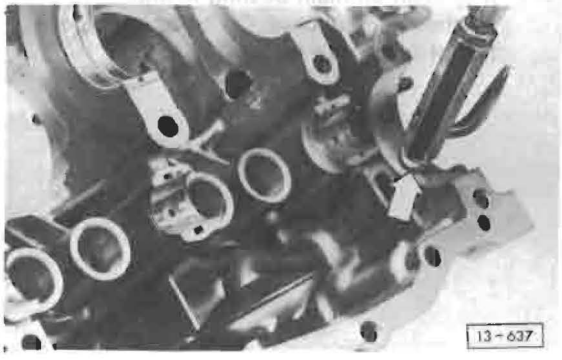

Fig. 4 Oil pickup line with filter screen, cleaning

— clean oil channels by blowing through with compressed air (arrow)

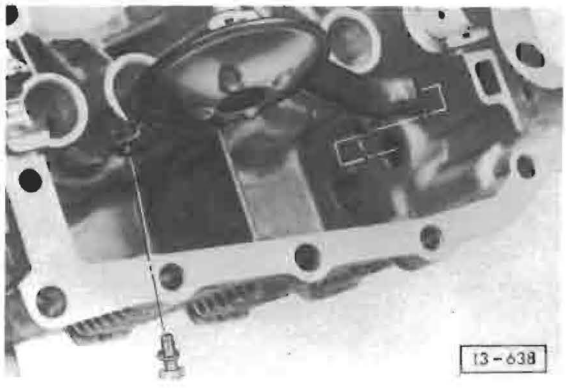

Fig. 5 Oil suction line with filter screen, replacing

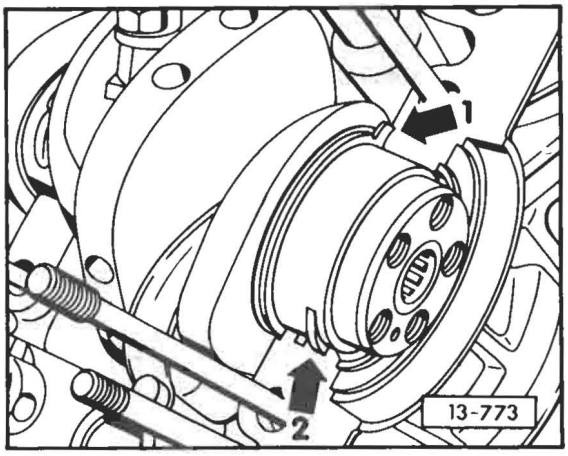

Fig. 6 Thrust washer and main bearing 1, installing

Arrow 1: projection on thrust washer points toward main bearing and separating line of crankcase.

Arrow 2: projection on main bearing fit into notches in crankcase. Oil holes are in left half of crankcase housing.

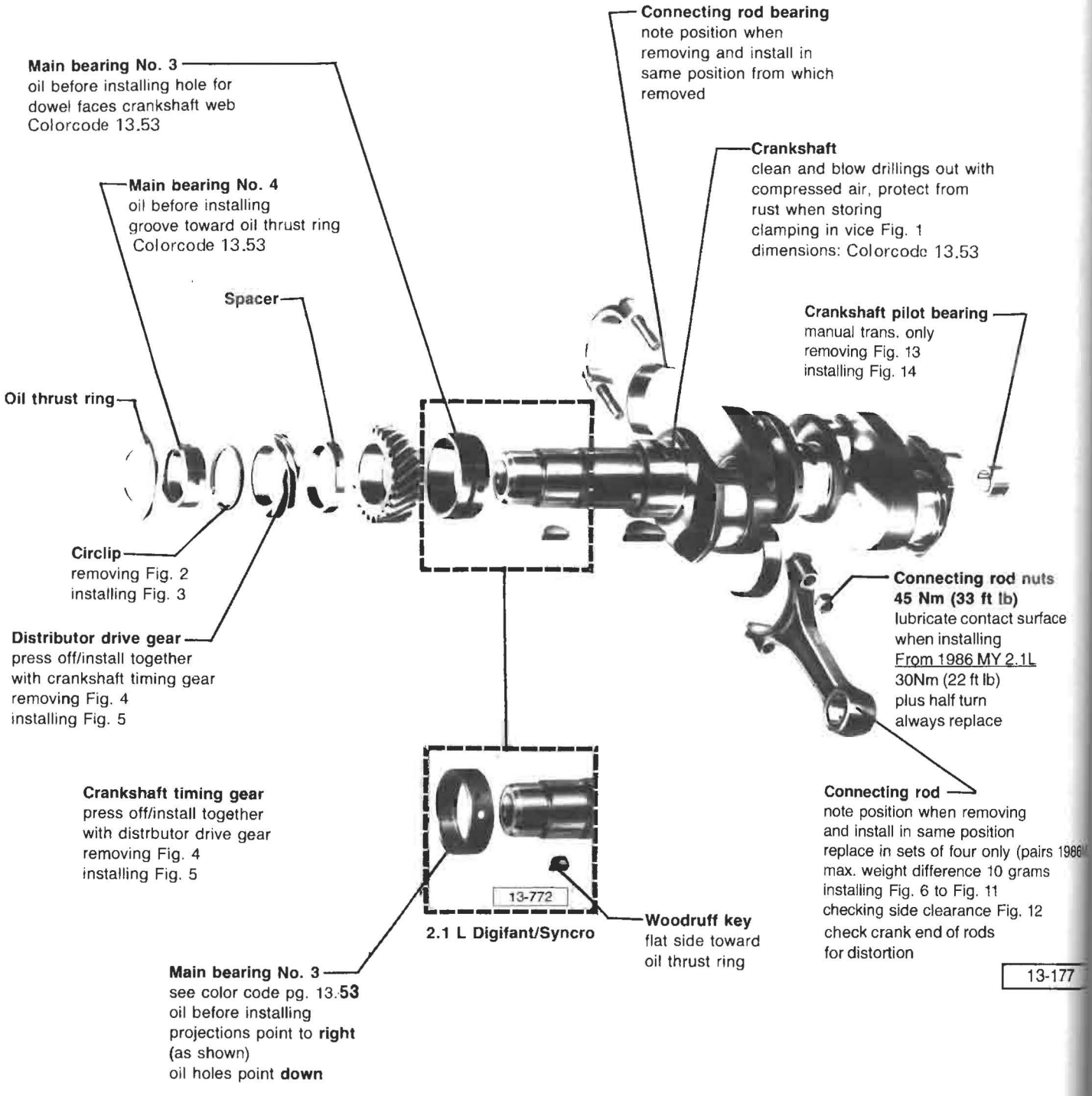
Connecting rod bearing
note position when removing and install in same position from which removed
Main bearing No. 3
oil before installing hole for dowel faces crankshaft web
Colorcode 13.53
Crankshaft
clean and blow drillings out with compressed air, protect from rust when storing
clamping in vice Fig. 1
dimensions: Colorcode 13.53
Main bearing No. 4
oil before installing
groove toward oil thrust ring
Colorcode 13.53
Spacer
Crankshaft pilot bearing
manual trans. only
removing Fig. 13
installing Fig. 14
Oil thrust ring
Circlip
removing Fig. 2
installing Fig. 3
Distributor drive gear
press off/install together with crankshaft timing gear
removing Fig. 4
installing Fig. 5
Connecting rod nuts
45 Nm (33 ft lb)
lubricate contact surface when installing
From 1986 MY 2.1L
30Nm (22 ft lb)
plus half turn
always replace
Crankshaft timing gear
press off/install together with distrbutor drive gear
removing Fig. 4
installing Fig. 5
Connecting rod
note position when removing and install in same position
replace in sets of four only (pairs 1986
max. weight difference 10 grams
installing Fig. 6 to Fig. 11
checking side clearance Fig. 12
check crank end of rods for distortion
13-772
2.1 L Digifant/Syncro
Woodruff key
flat side toward oil thrust ring
Main bearing No. 3
see color code pg. 13.53
oil before installing
projections point to right (as shown)
oil holes point down
13-177

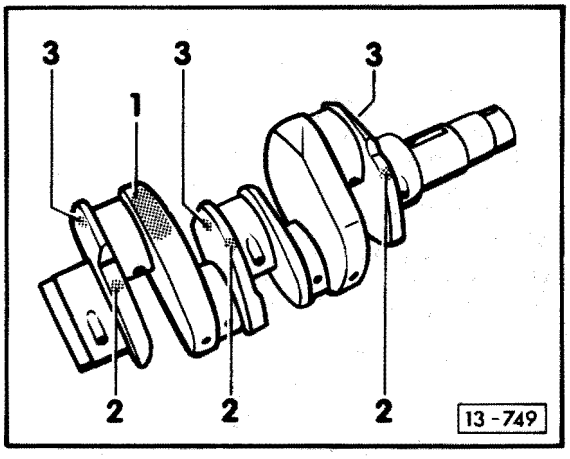

Crankshaft color code

1 = Color code **green** (2.1 L engine-Digifant/Syncro)
2 = Color code **blue** or **red** (crankshaft code/size)

Note

On some crankshafts the blue or red code can appear in position **three.**

Crankshaft journal sizes (mm)

	Bearing No. 1	Bearing No. 2	Bearing No. 3	Bearing No. 4	Connecting rod
Standard size (thru 1985)	59.980-59.990 (marked: blue dot) 59.971-59.979 (marked: red dot)	54.971-54.990	54.980-54.990 (marked: blue dot) 54.971-54.979 (marked: red dot)	39.984-40.00	54.983-54.996
2.1 L Digifant, Syncro		54.980-54.990 (marked: blue dot) 54.971-54.979 (marked: red dot)			

Note

If crankshaft has blue or red dot **only** main bearings with same color code can be used.

Code for main bearings, 1, 2, 3 = 001 (blue), 004 (red)

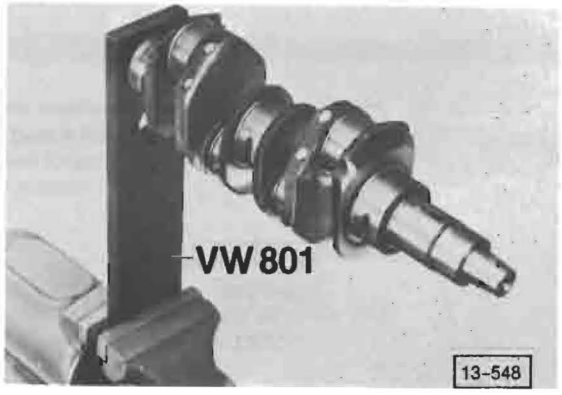

Fig. 1 Crankshaft, clamping in vise

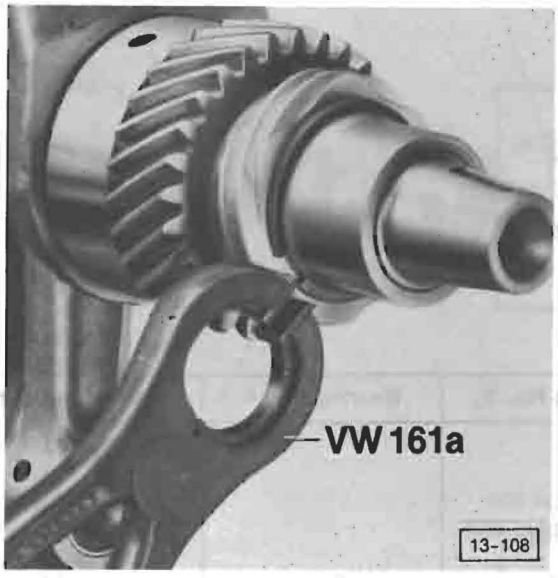

Fig. 2 Circlip, removing

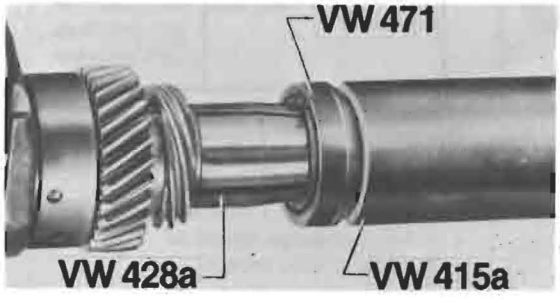

Fig. 3 Circlip, installing

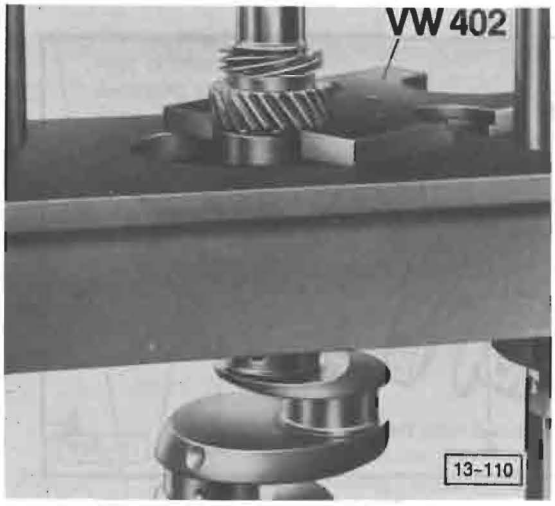

Fig. 4 Distributor drive gear/crankshaft timing gear, removing

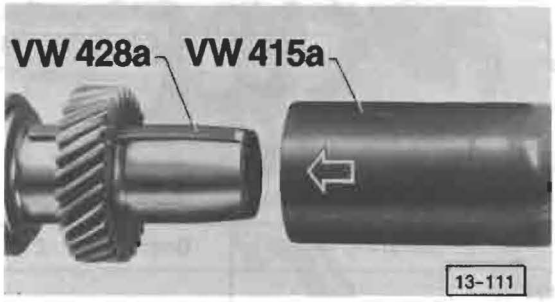

Fig. 5 Distributor drive gear/crankshaft timing gear, installing

— heat gears to approx. 80 °C (175 °F) before installing



Fig. 6 Connecting rod, installing

— numbers (arrow) on rod and cap must match and be on same side

Connecting rod bolts, removal/installing
2.1L Digifant/Syncro

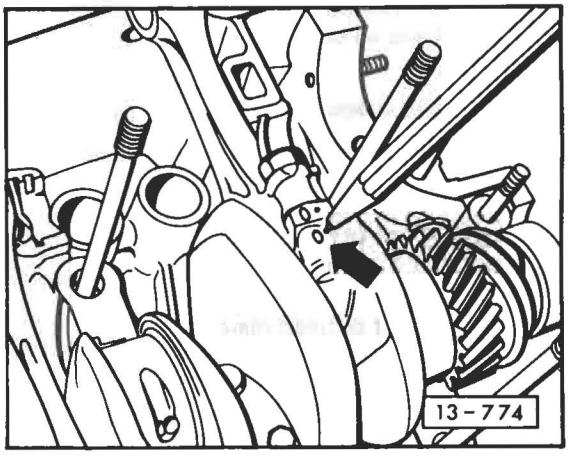

Fig. 7 Mark matching connecting rod/bearing cover with cylinder

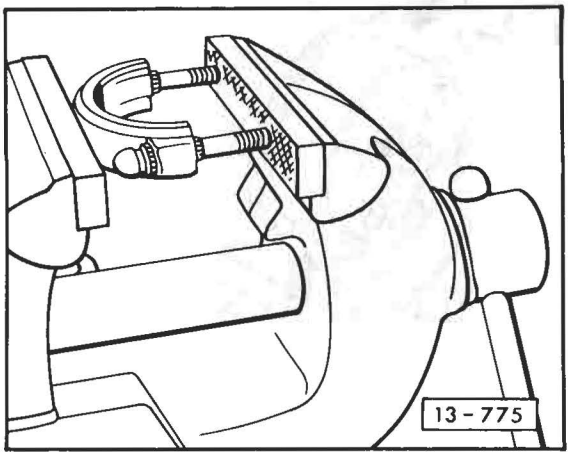

Fig. 8 Connecting rod bolts, removing

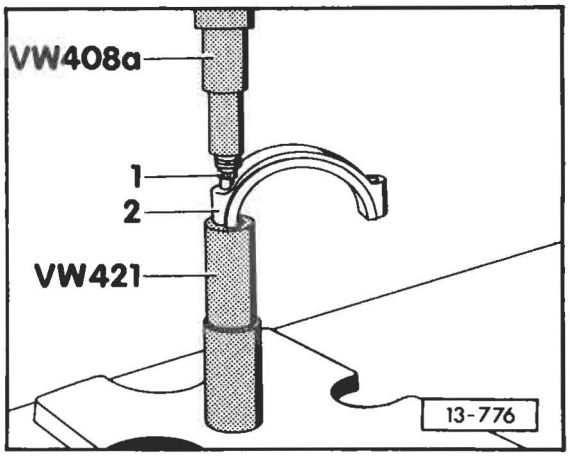

Fig. 9 Connecting rod bolts, installing

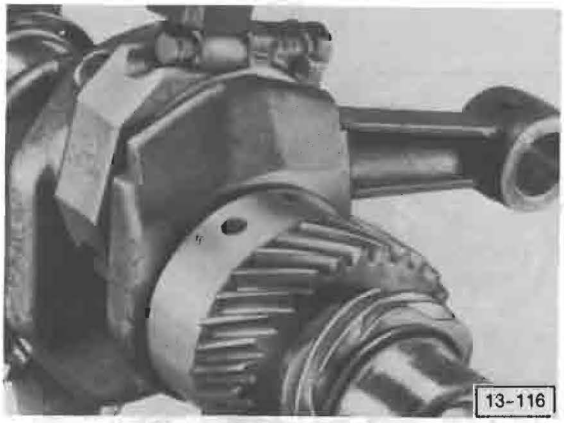

Fig. 10 Connecting rod, installing

— lightly tap both sides of connecting rod with hammer to eliminate slight pinching of bearing shells when installing connecting rod

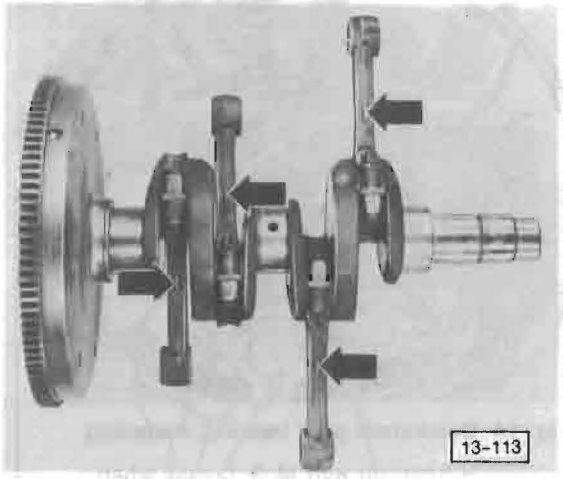

Fig. 11 Connecting rods, installation position

• forged mark on rods (arrows) must face up when rods are installed

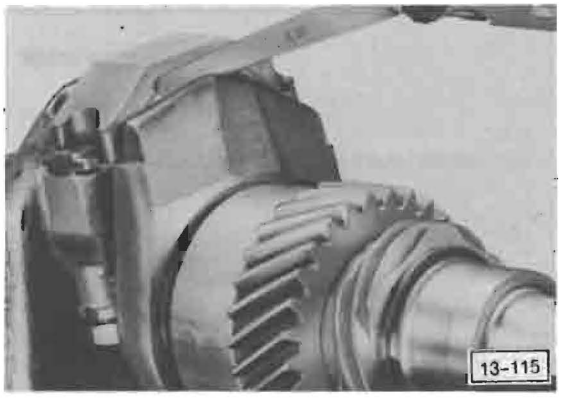

Fig. 12 Connecting rod, checking side clearance

• wear limit 0.7 mm (0.028 in.)

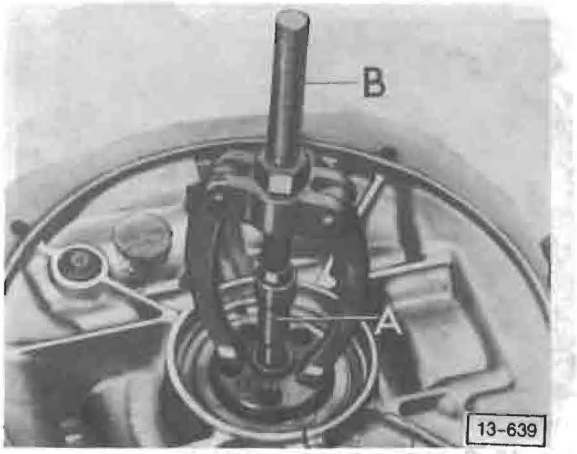

Fig. 13 Crankshaft pilot bearing, removing

A = US 8028
B = US 1039 & US 1039/3

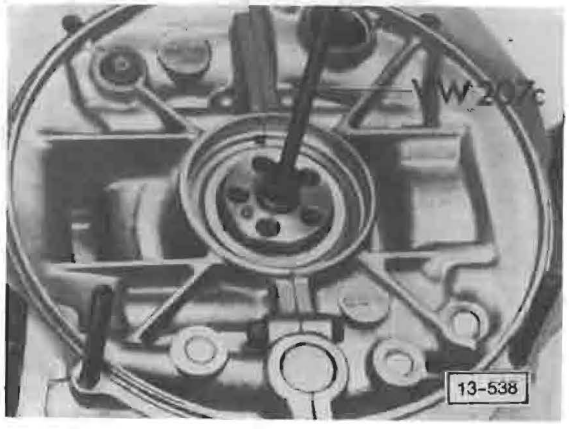

Fig. 14 Crankshaft pilot bearing, installing

— lubricate with MoS_2 grease when installing
• markings on bearing cage must face outward

Replacing 1.9L crankcase

Effective immediately, the replacement crankcase for 2.1L waterboxer engines will also be used for 1.9L waterboxer engines.

When replacing the 1.9L crankcase note the following:

Intake air distributor

Install intake air distributor **025 133 055 B** when changing from a 1.9L crankcase to a 2.1L crankcase.

Thrust washer and main bearing 1

Installing

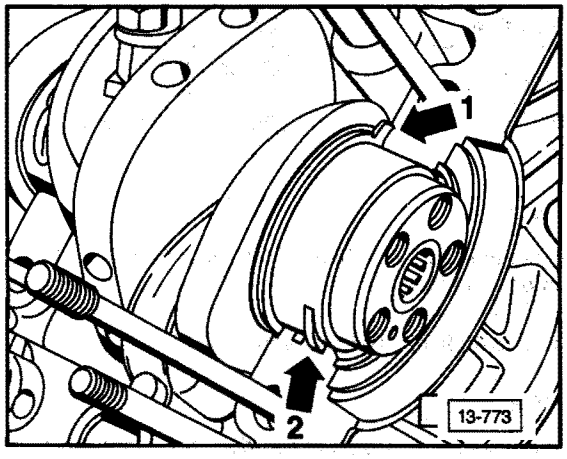

Arrow 1: Tab on thrust washer points toward main bearing and separating line of crankcase halves.

Arrow 2: Tab on main bearing fits into notches in crankcase. Oil holes are in left half of crankcase housing.

Crankshaft end play, checking

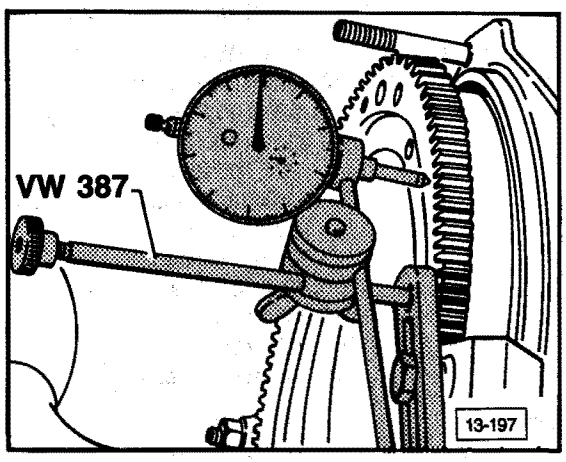

— check crankshaft end play
(main bearing 1 without shoulder)

- new: 0.07-0.13 mm (0.003-0.005 in.)
- wear limit: 0.15 mm (0.006 in.)

— if out of adjustment, adjust

Crankshaft end play, adjusting

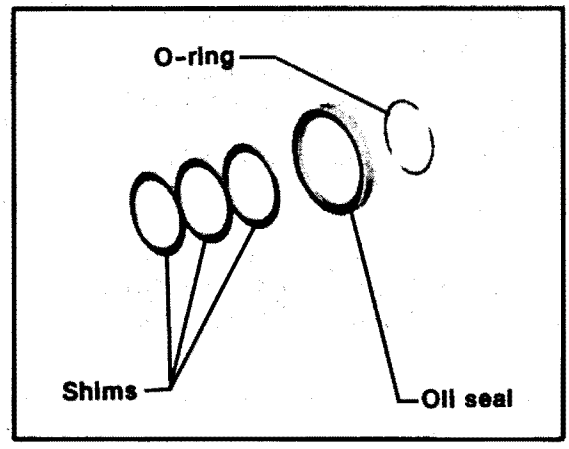

Shim arrangement

Note

Shims are available in different thicknesses. Thickness is etched on each shim.

Oil seal
• pry out with screwdriver
O-ring
•always replace

Parts required

Description	Part no.	Quantity
75.0mm (3.0 in.) diameter shims	021 105 281 (0.30mm thickness) 021 105 283 (0.32mm thickness) 021 105 285 (0.34mm thickness) 021 105 287 (0.36mm thickness) 021 105 289 (0.38mm thickness) 021 105 291 (0.24mm thickness)	3
Oil seal	029 105 245 B	1
O-ring	021 105 279	1

— check crankshaft end play
- new: 0.07-0.13 mm (0.003-0.005 in.)
- wear limit: 0.15 mm (0.006 in.)

— if out of specification proceed as follows:
— install flywheel with 2 shims but **without** O-ring and crankshaft oil seal
— mount dial indicator with bracket on crankcase
— move crankshaft in and out and measure movement (crankshaft end play)
— determine thickness of 3rd shim

Example

dial indicator reading	0.44 mm (0.017 in.)
specified end play	– 0.10 mm (0.004in.)
thickness of 3rd shim	0.34 mm (0.013 in.)

CAUTION

Always install **three** shims to obtain correct crankshaft end play

— remove flywheel
— install O-ring, crankshaft oil seal and felt ring
— install all three shims

— install flywheel
— tighten bolts to 60 Nm (44 ft lb) plus an add'l 1/4 turn (90°)
— recheck crankshaft end play

Crankshaft color code

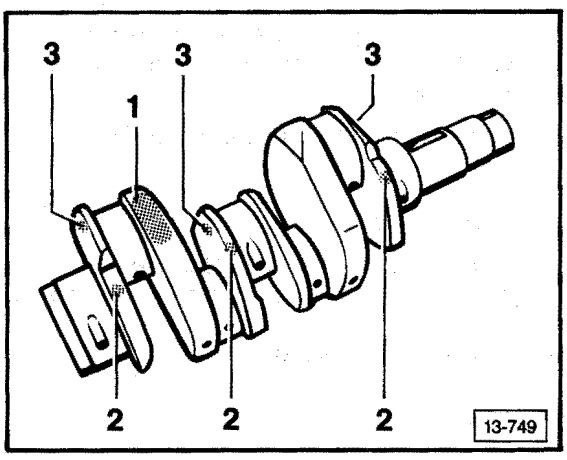

Position	Color
1	Green (2.1L crankshaft only)
2	Red or blue (crankshaft journal size)

Note

On crankshafts the blue or red code can also appear in position **three**.

Crankshaft journal sizes (mm)

Note

If crankshaft has blue or red dot **only main bearings with same color code can be used.**

Code for main bearings, 1, 2, 3 = 001 (blue), 004 (red)

Bearing no.	Standard size	Grinding dimensions
1 (Flywheel side)	60.00 (blue or red dot)	59.980-59.990 (marked blue dot) 59.971-59.979 (marked red dot)
2, 3	55.00 (blue or red dot)	54.980-54.990 (marked blue dot) 54.971-54.979 (marked red dot)
4	40.00 (no color code)	39.984-40.00 (no color code)
Connecting rod	55.00 (no color code)	54.983-54.996 (no color code)

Engine
Cylinder Head
Valve Drive

Index

Air-cooled
— Compression pressure
checking 15.2
— Cylinder head
assembly 15.2
— Gasoline additive
reducing carbon deposits 15.25
— Rocker arm shaft
installing 15.3
— Valves
assembly 15.2
dimensions 15.3
guides 15.4
hydraulic lifters 15.6
seats, refacing 15.4
springs 15.2

Diesel
— Camshaft
assembly 15.10
end play 15.15
oil seal 15.15
radial clearance 15.15a
run-out 15.15
— Compression pressure
checking 15.16
— Cylinder head
assembly 15.8
bolts 15.9
distortion 15.14
gasket 15.9
— Valves
assembly 15.10

Water-cooled Syncro
— Gasoline additive
reducing carbon deposits 15.31
— Compression pressure
checking 15.20
— Cylnder head
assembly 15.17
installing 15.23
sealing 15.23, 15.26
— Engine block
assembly 15.22
— Pushrod tubes
replacing 15.25
— Valves
assembly 15.17
dimensions 15.18
hydraulic lifters 15.23
guides 15.20
seats, refacing 15.18
springs 15.18

Compression, checking

WARNING

On vehicles with electronic ignition, disconnect terminal 4 on ignition coil and connect to ground before performing compression test

- compression pressure: 6-9 bar (87-131 psi)
  minimum: 5 bar (73 psi)
- maximum pressure difference between highest and lowest cylinder: 3 bar (44 psi)

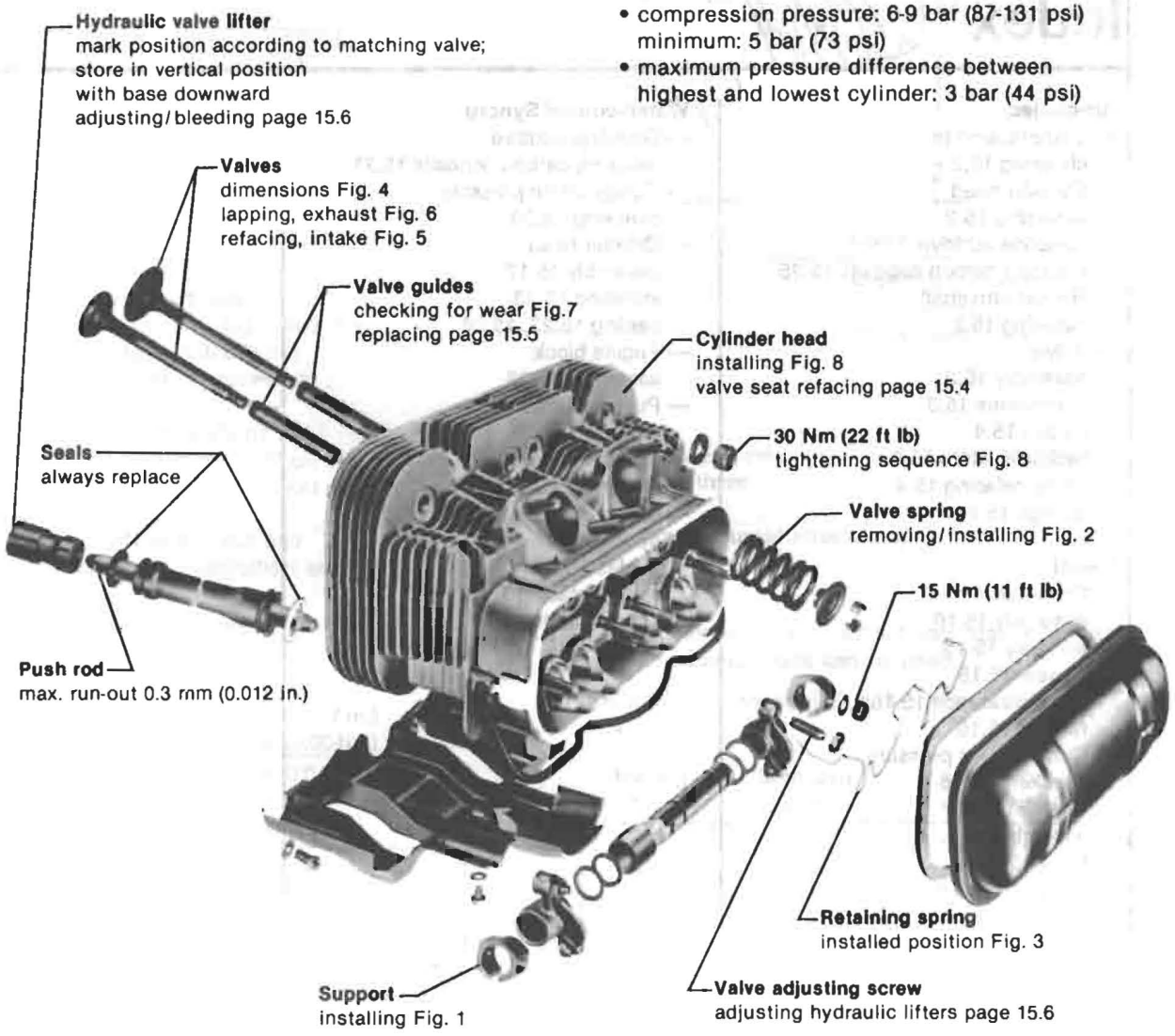

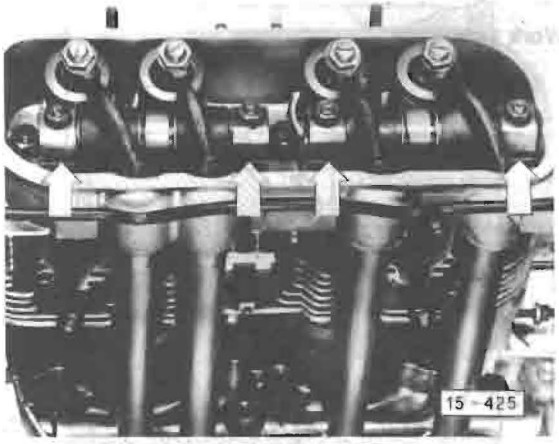

Fig. 1 Rocker arm shaft supports, installing

- slot downward (arrows)
- chamfer outward

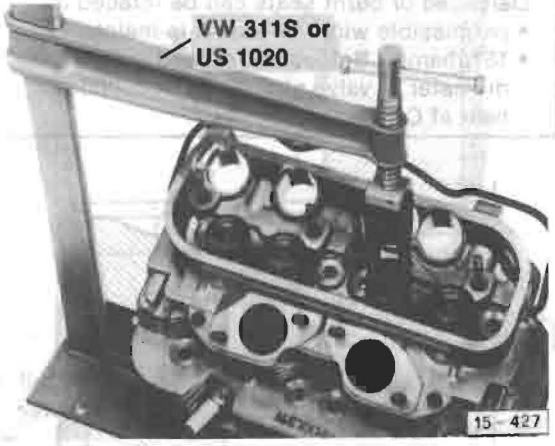

Fig. 2 Valve spring, removing/installing

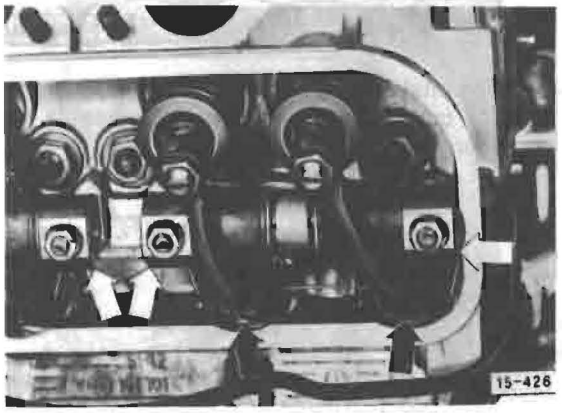

Fig. 3 Retaining spring for pushrod tube, installed position (arrows)

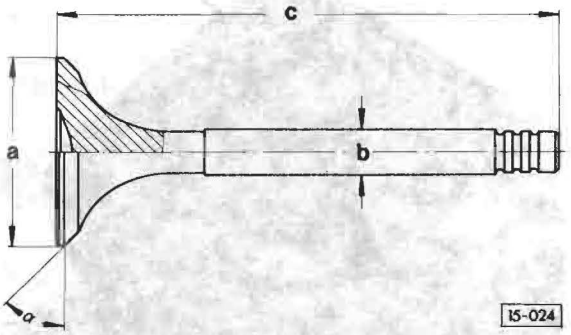

Fig. 4 Valves, dimensions

Intake valve

a = 39.3 mm (1.547 in.) diameter
b = 7.95 mm (0.313 in.) diameter
c = 115.4 mm (4.540 in.) length
α = 29°30′

Exhaust valve

a = 33.0 mm (1.299 in.) diameter
b = 8.92 mm (0.351 in.) diameter
c = 115.4 mm (4.540 in.) length
α = 45°

CAUTION

Do not rework **exhaust valves** by machine; lap by hand only

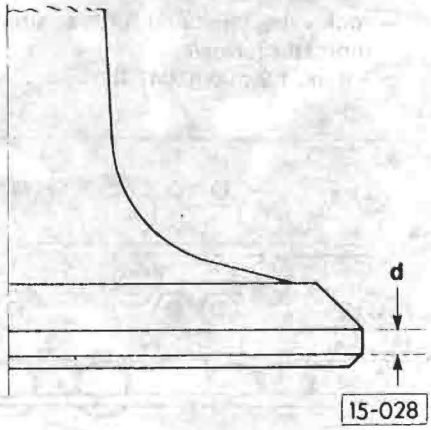

Fig. 5 Intake valves, refacing

— check stem diameter
— grind seat angle to 29°30′
- valve margin **d** must not be less than 0.5 mm (0.020 in.)

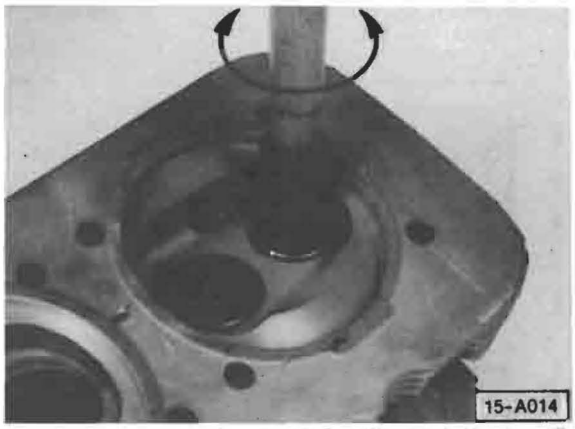

Fig. 6 Exhaust valves, lapping

— lift and turn frequently

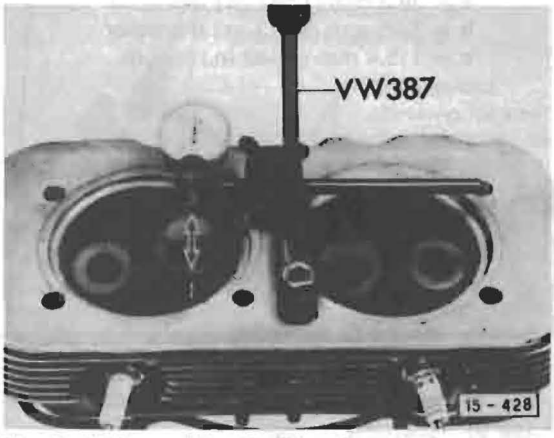

Fig. 7 Valve guide checking for wear

— remove carbon
— insert new valve into valve guide
  • valve stem must be flush with valve guide end
— rock valve back and forth against dial indicator (arrow)
  • max. 1.2 mm (0.047 in.)

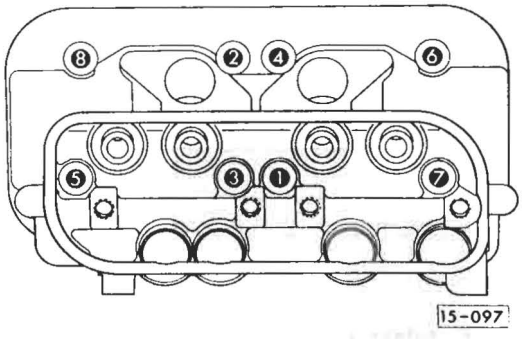

Fig. 8 Cylinder head, installing

— tighten nuts lightly by hand
— torque in numbered sequence to 30 Nm (22 ft lb)

Valve seats, refacing

Work sequence

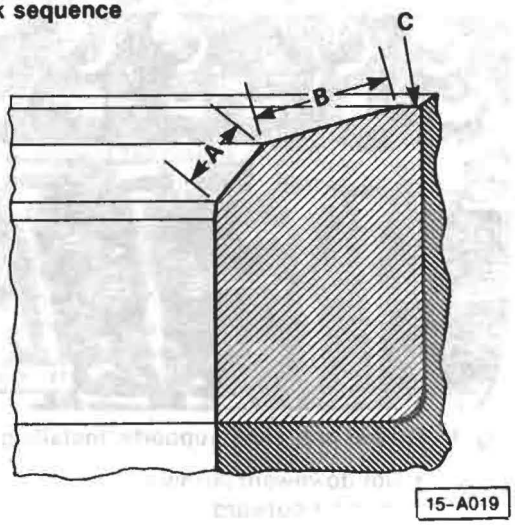

CAUTION

Damaged or burnt seats can be refaced **if:**
- permissible width of seat **A** is maintained
- 15°chamfer **B** does not exceed outer diameter of valve seat insert in cylinder heat at **C**

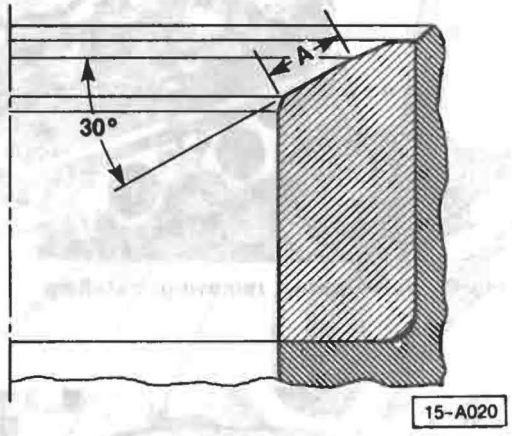

— reface **intake** valve seats **A** to 30° angle
  • stop cutting as soon as complete seat is cleaned

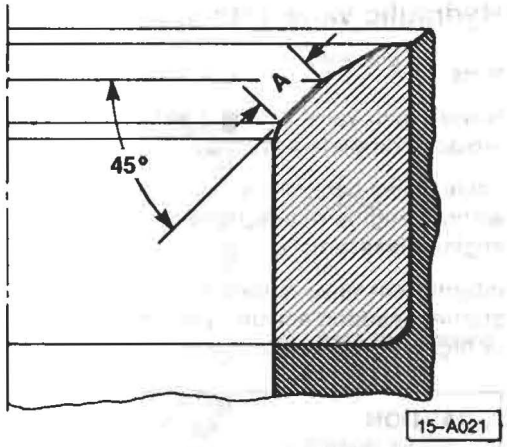

— reface **exhaust** valve seats **A** to 45° angle
  • stop cutting as soon as complete seat is cleaned

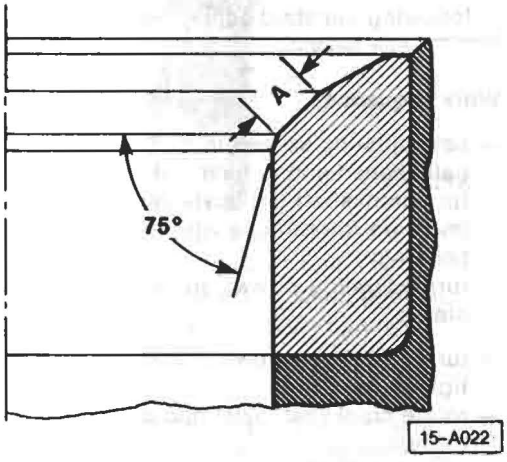

— lightly chamfer edges of intake and exhaust valve seats **A** with 75° cutter

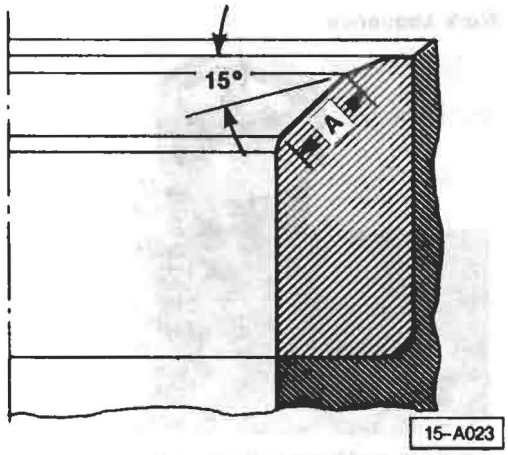

— using 15° cutter, narrow **intake** valve seat widths **A** to 1.8–2.2 mm (0.070–0.086 in.)
— using 15° cutter, narrow **exhaust** valve seat widths **A** to 2.0–2.5 mm (0.078–0.098 in.)

Valve guides, replacing

Work sequence

— clean cylinder head
— check for cracks in head and in valve seats

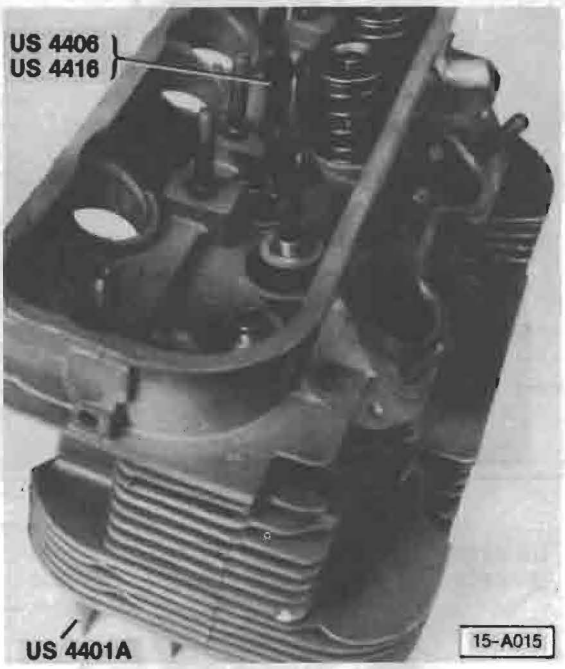

— mount head on US 4401A
— drill guides with shouldered drill to depth of 40–50 mm (1.575–1.968 in.)

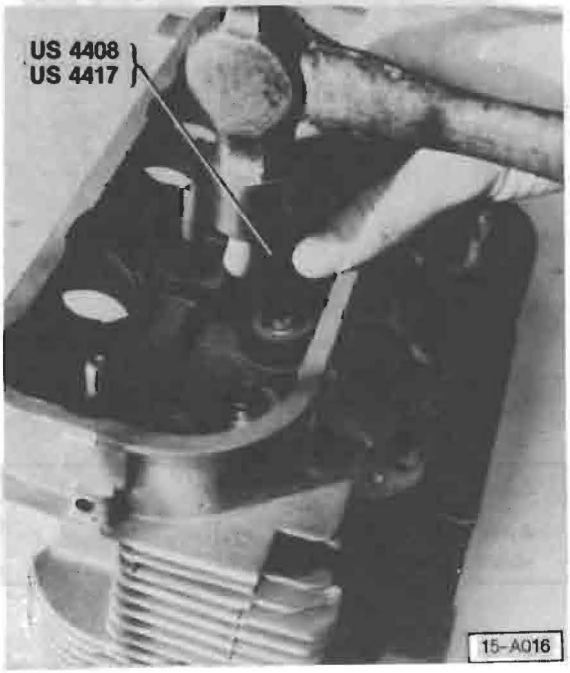

— drive out remaining part of guide
— go to next page

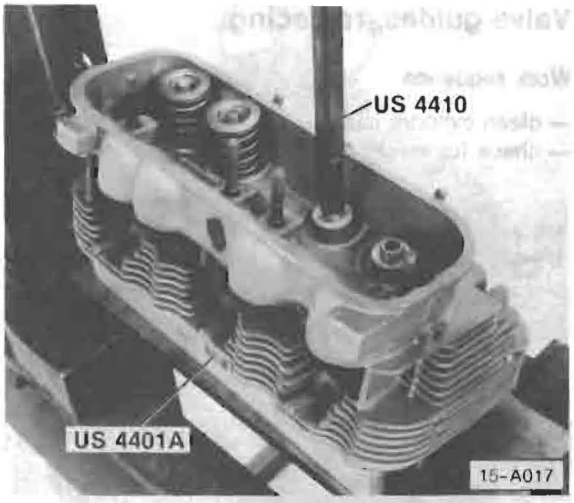

— coat new guide with engine oil and press in

CAUTION

Do not use more than 2 tons of pressure

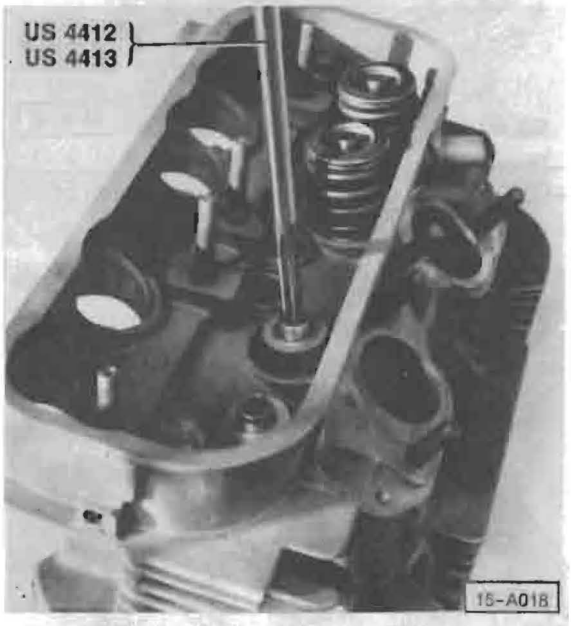

— ream guides to size
  • use cutting oil

CAUTION

After valve guides have been replaced, valve seats must be refaced

Hydraulic valve lifters, adjusting

Note

Never repair valve lifters; if worn or damaged, replace complete assembly.

Valve lifters can be removed and replaced without engine removal and without major engine disassembly.

Intermittent valve noises are normal upon starting, sudden acceleration, high temperatures or high engine speed

CAUTION

If metal particles are found in oil pan, remove, disassemble, clean and reinstall all valve lifters from position removed

If rocker shafts have been removed, following standard adjustment is necessary

Work sequence

— set adjusting screws in rocker arms so that ball shaped end is flush with surface of arm
— turn crankshaft until cylinder No. 1 is at TDC (mark on rotor in line with mark on distributor housing)
— turn adjusting screws so they just touch valve stems
— turn adjusting screws 2 turns clockwise and tighten locknuts
— rotate crankshaft 180° and adjust next cylinder
— repeat until all cylinders are adjusted

Hydraulic valve lifters, bleeding

Work sequence



— before installing, check that valve lifter is bled correctly
  • check by applying firm thumb pressure on push rod socket in direction of arrow. Resistance should be felt

if **NO**, bleed lifter as follows:

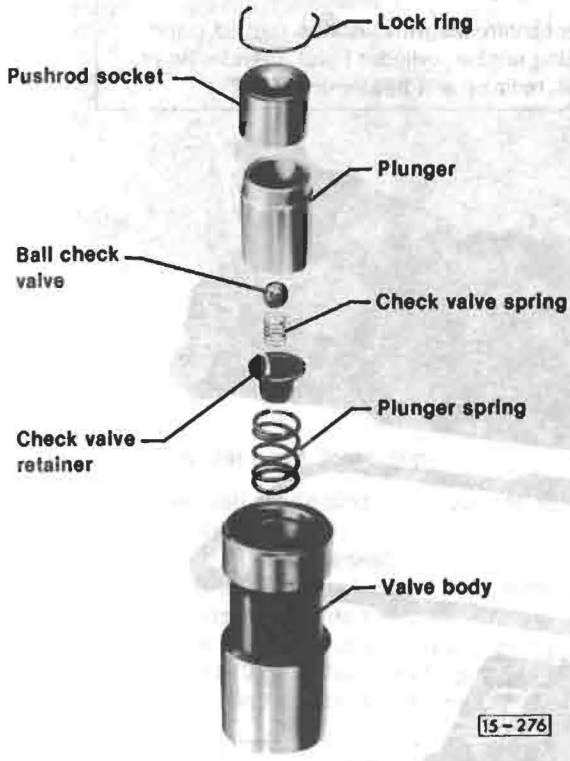

— fill tin can with engine oil
— cut an old Type 1 pushrod in half
— remove lock ring, pushrod socket, plunger, ball check valve with spring and plunger spring from body

— place valve lifter body in tin can
  • body must be completely covered by oil
— insert plunger spring, check valve retainer, check valve spring, ball check valve and and plunger into valve body

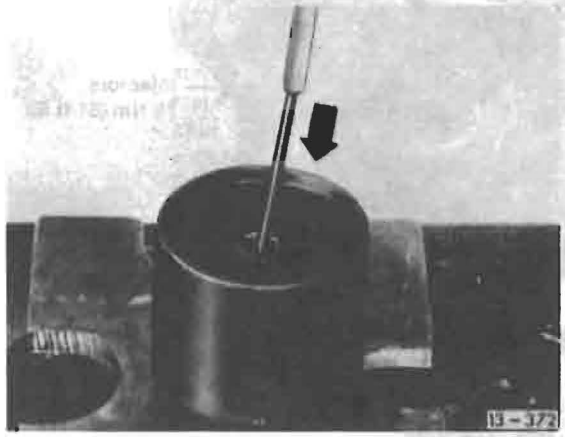

— open valve with scriber (arrow), so that oil can flow out of lower part of plunger

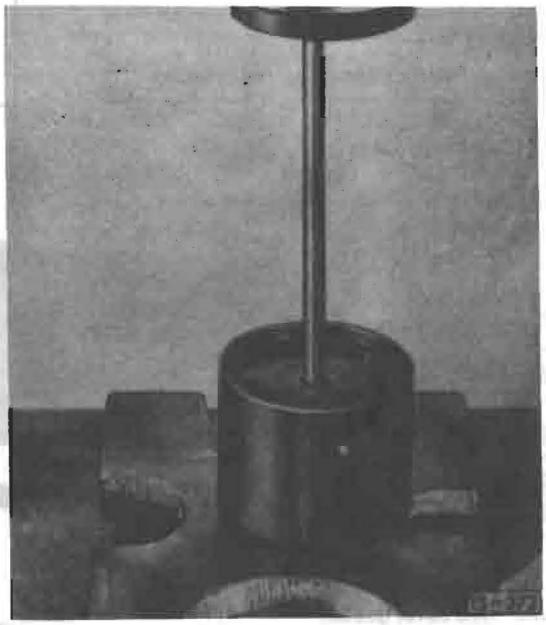

— insert pushrod socket
— place valve lifter (leave in can of oil) in press and force down slowly with Type 1 pushrod until lock ring can be installed
— install lock ring

CAUTION

Diesel cylinder heads **cannot** be resurfaced

CAUTION

Coolant/antifreeze **must not** be reused when replacing engine, cylinder head, cylinder head gasket, radiator and heater core.

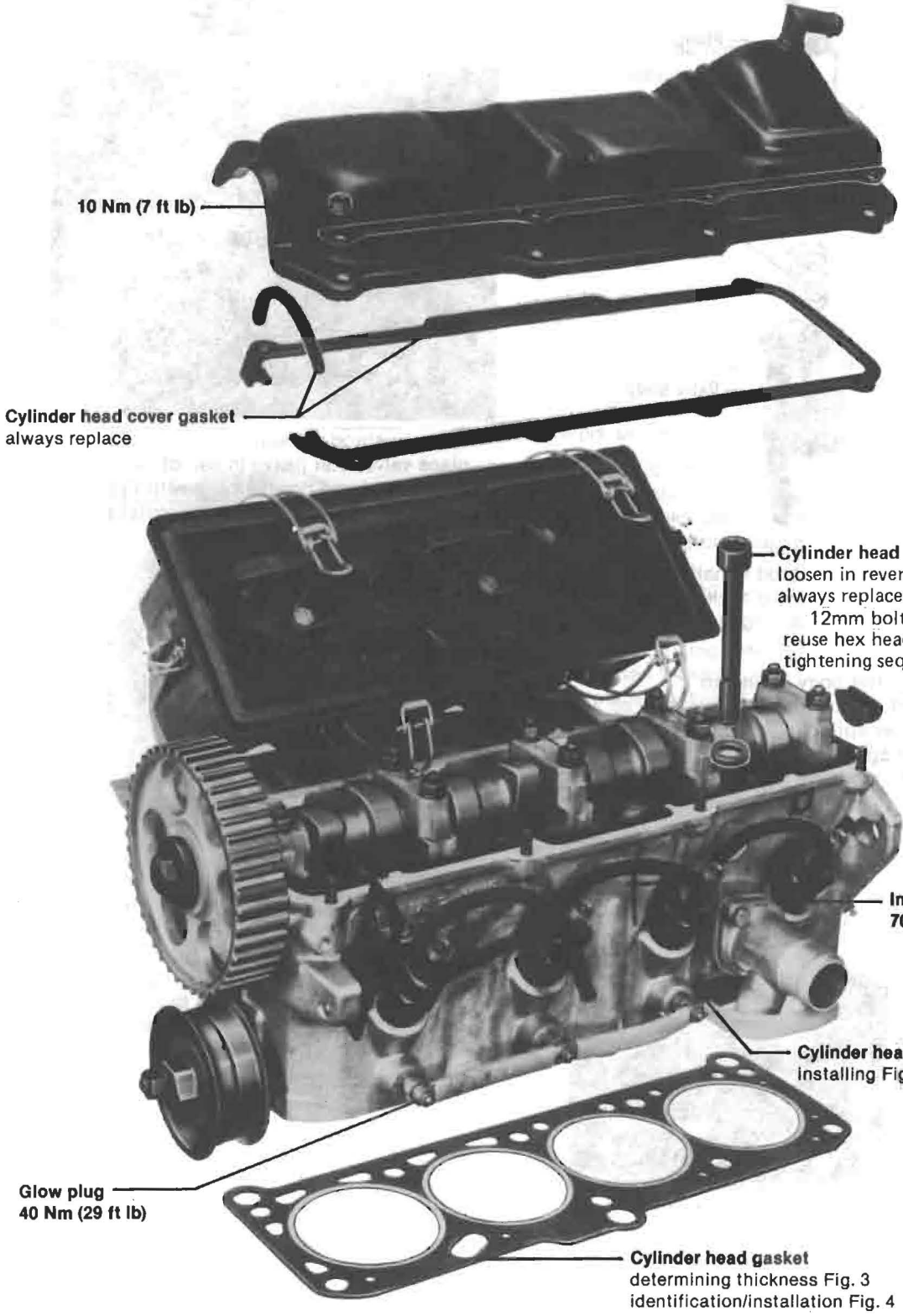

15-448

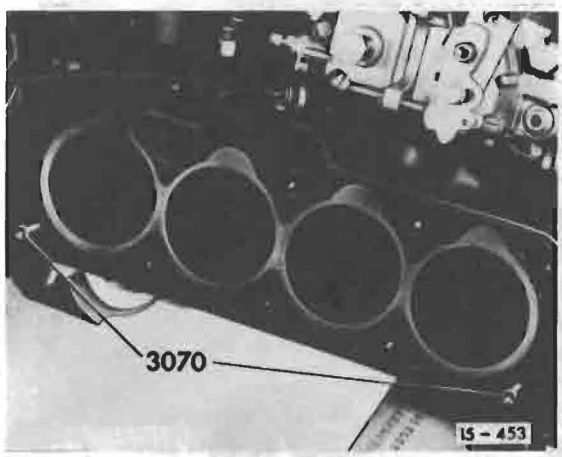

Fig. 1 Cylinder head, installing

—install guide pins from tool set 3070 as shown
—install head gasket
—install head and insert other 8 head bolts and tighten by hand
—remove guide pins with tool and install other 2 head bolts and tighten by hand
—tighten head bolts, see Fig. 2

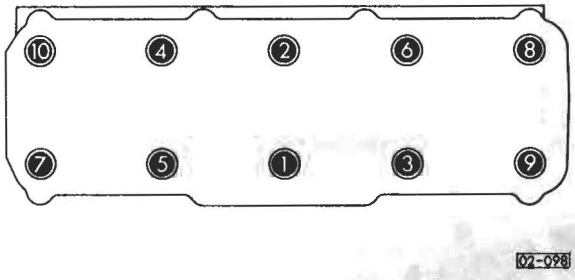

Fig. 2 Cylinder head bolts, tightening sequence

— with engine cold, torque cylinder head bolts in sequence in following steps:
step 1 to 40 Nm (30 ft lb)
step 2 to 60 Nm (44 ft lb)
step 3 to 75 Nm (55 ft lb)
— after step 3, turn bolts in sequence with breaker bar ½ turn (180°) further (two ¼ turns are O.K.)
— run engine until it reaches normal operating temperature (engine oil temperature 50°C/122°F or when radiator fan starts running)
— stop engine and retighten head bolts in sequence ¼ turn (90°) further with breaker bar without first loosening them
— after about 1000 miles (with engine either cold or warm) retighten cylinder head bolts with breaker bar, turning bolts in sequence ¼ turn (90°) without loosening them and without interruption

Note

Head can be removed and installed with engine in car.
Removing and installing drive belt—see Repair Group 13.
Before working on head, remove injectors and glow plugs.
Every time head is removed, cylinder head bolts must be torqued, and again after about 1000 miles as described above

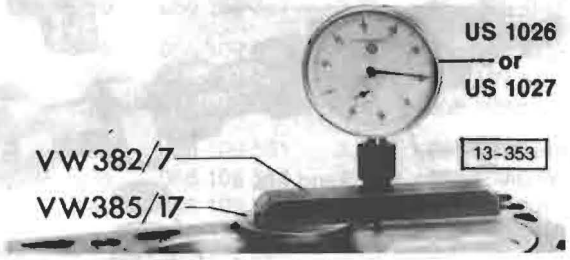

Fig. 3 Cylinder head gasket, determining thickness

• piston height must be measured when installing new pistons or short block and head gasket selected
—measure piston height and select gasket from following table

Piston height mm (in.)	Identification (notches in gasket)	Part No.
0.63–0.82 (0.025–0.032)	1	068 103 383 L
0.83–0.92 (0.033–0.036)	2	068 103 383 M
0.93–1.02 (0.037–0.040)	3	068 103 383 N

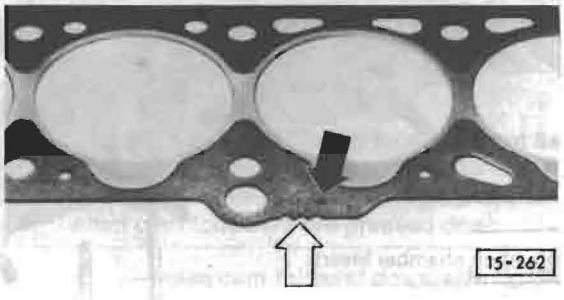

Fig. 4 Cylinder head gasket, identification/installation

• identified by Part No. and notches (arrows)
—always select gasket thickness according to piston height above top of cylinder block
• marking **OBEN** on gasket must face cylinder head

CAUTION

Diesel cylinder heads cannot be resurfaced

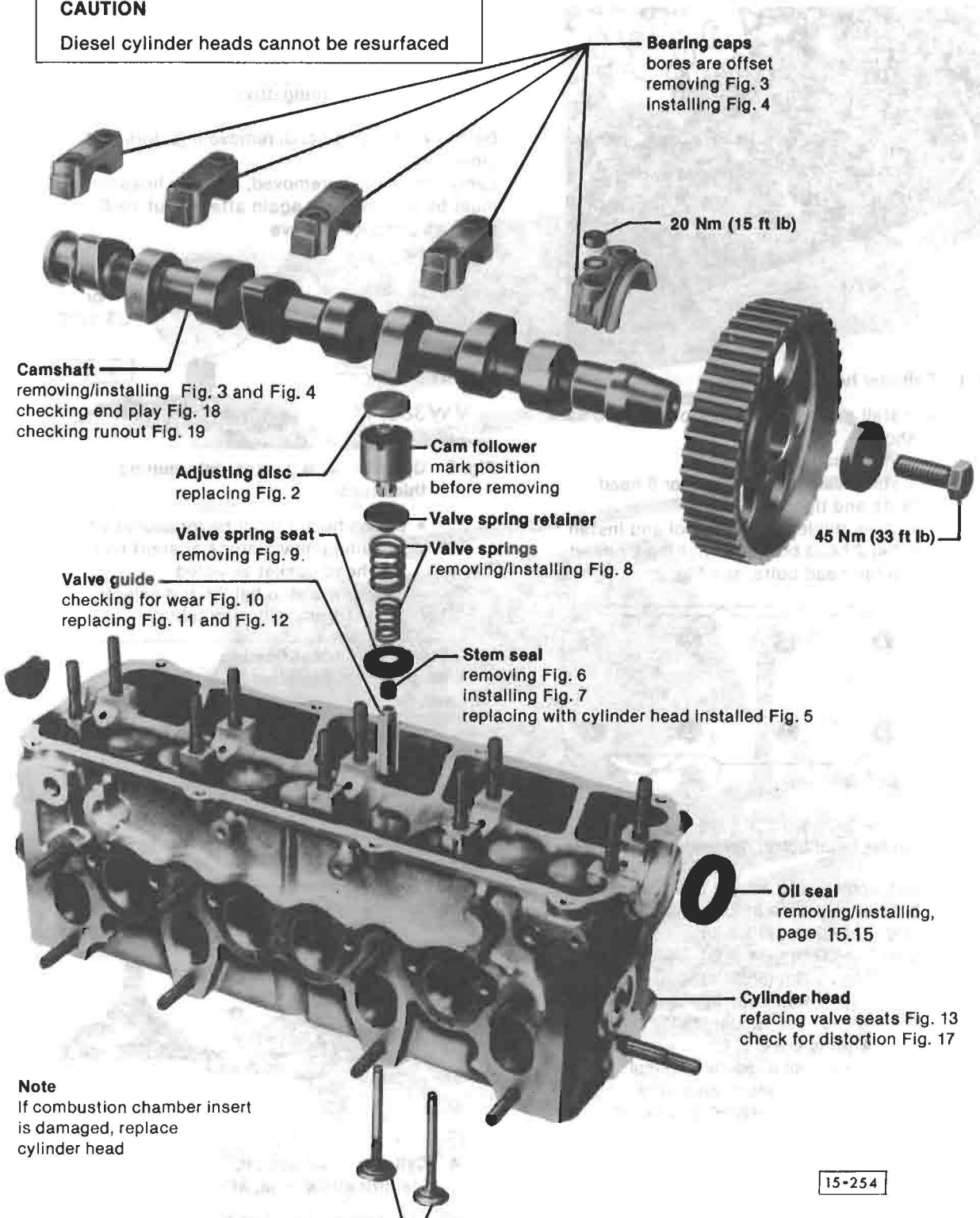

CAUTION

Coolant/antifreeze **must not** be reused when replacing engine, cylinder head, cylinder head gasket, radiator and heater core.

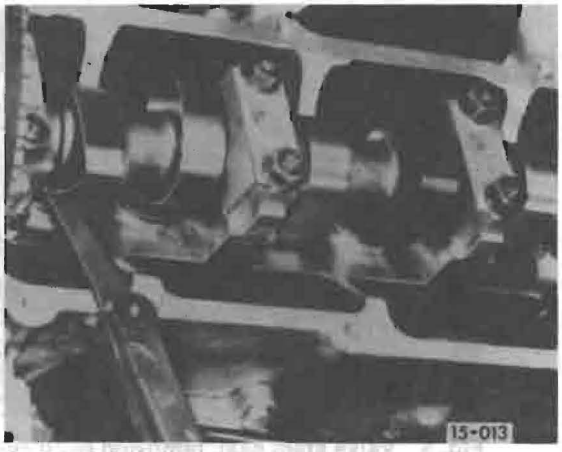

Fig. 1 Valve clearance, checking/adjusting

Warm

—warm up engine. Cylinder head moderately warm. Coolant temperature above 35 °C (95 °F)
—turn camshaft by pushing vehicle in 4th gear. Cam lobes of valve to be adjusted should point upward
—check that valve clearances are:
- Intake: 0.20–0.30 mm (0.008–0.012 in.)
- Exhaust: 0.40–0.50 mm (0.016–0.020 in.)

CAUTION

Do not turn camshaft by mounting bolt. This will stretch drive belt

—if measured valve clearance is larger than given tolerance, remove existing adjusting disc and insert thicker disc to specification (see Fig. 2)
—if measured valve clearance is smaller than given tolerance, remove existing disc and insert thinner disc to specification (see Fig. 2)

Example	Intake	Exhaust
specified clearance	0.20–0.30 mm (0.008–0.012 in.)	0.40–0.50 mm (0.016–0.020 in.)
measured clearance	0.35 mm (0.014 in.)	0.35 mm (0.014 in.)
insert disc that is	0.10 mm (0.004 in.) thicker	0.10 mm 0.004 in.) thinner

Cold

—with engine cold, check that valve clearances are:
- Intake: 0.15–0.25 mm (0.006–0.010 in.)
- Exhaust 0.35–0.45 mm (0.014–0.018 in.)

Note

After cylinder head repairs, valve clearance must be checked and if necessary adjusted after 1000 miles. Adjust to mid-point of range

Valve adjusting discs

Thick-ness	Part Number	Thick-ness	Part Number
3.00	056 109 555	3.65	056 109 568
3.05	056 109 556	3.70	056 109 569
3.10	056 109 557	3.75	056 109 570
3.15	056 109 558	3.80	056 109 571
3.20	056 109 559	3.85	056 109 572
3.25	056 109 560	3.90	056 109 573
3.30	056 109 561	3.95	056 109 574
3.35	056 109 562	4.00	056 109 575
3.40	056 109 563	4.05	056 109 576
3.45	056 109 564	4.10	056 109 577
3.50	056 109 565	4.15	056 109 578
3.55	056 109 566	4.20	056 109 579
3.60	056 109 567	4.25	056 109 580

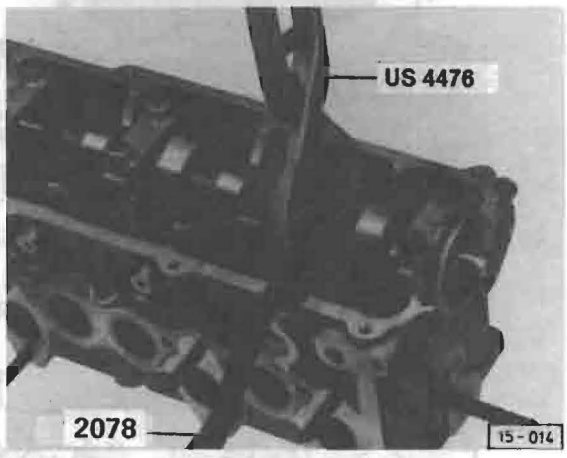

Fig. 2 Valve adjusting disc, removing/installing

CAUTION

When adjusting valves, pistons **must not** be at TDC. Turn crankshaft about 1/4 turn past TDC so that valves do not contact pistons when cam followers are pressed down

—press cam follower down with **2078**
—remove valve adjusting disc with US **4476**

Note

Thickness of valve adjusting disc etched on underside. When installing be sure that markings face downward (toward cam follower). Discs can be reused if not worn or damaged. Use tray 10–212 for storing discs

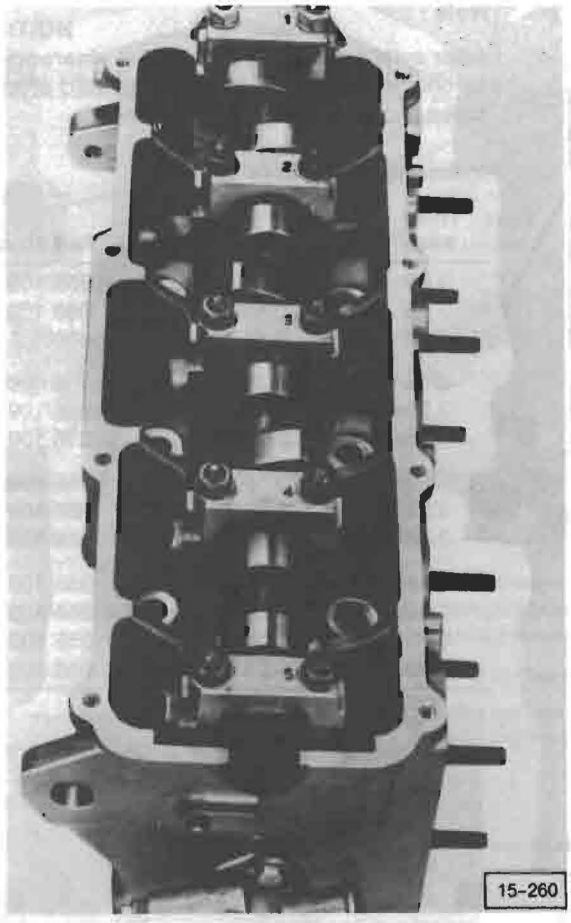

Fig. 3 Camshaft bearing caps, removing

—remove bearing caps 5, 1 and 3
—diagonally loosen bearing caps 2 and 4

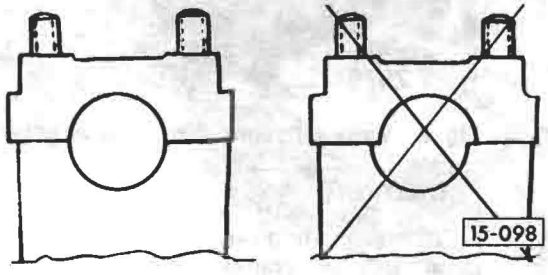

Fig. 4 Camshaft bearing caps, installing

—lubricate bearing surfaces and camshaft journals
—install caps in proper order—observe off center bearing position; numbers on bearing caps are not always on same side
—lightly tighten bearing caps 2 and 4 diagonally
—install caps 5, 1 and 3
—tighten all camshaft bearing cap nuts to 20 Nm (14 ft lb)

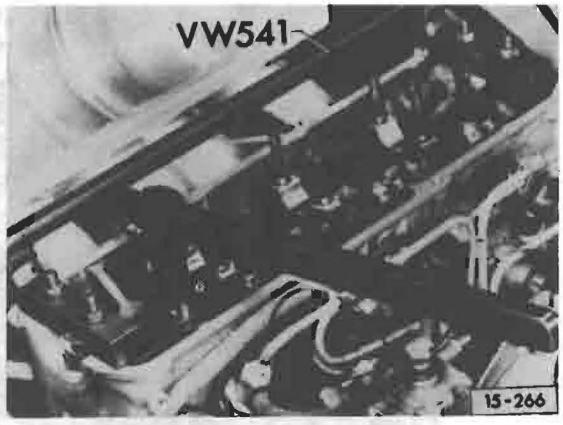

Fig. 5 Valve stem seal, removing (with cylinder head installed)

—remove camshaft, adjusting discs and followers
—turn crankshaft until piston of cylinder concerned is at TDC
—remove valve springs with VW 541
—replace valve stem seal

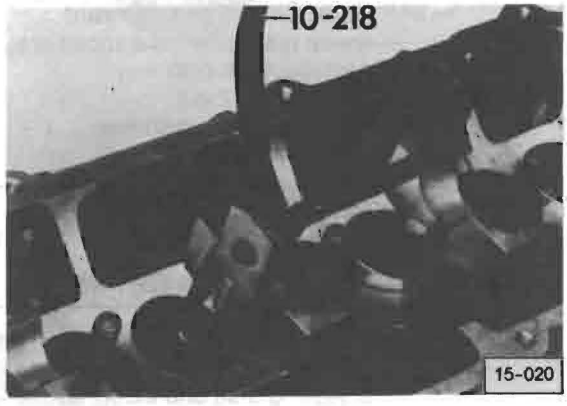

Fig. 6 Valve stem seal, removing

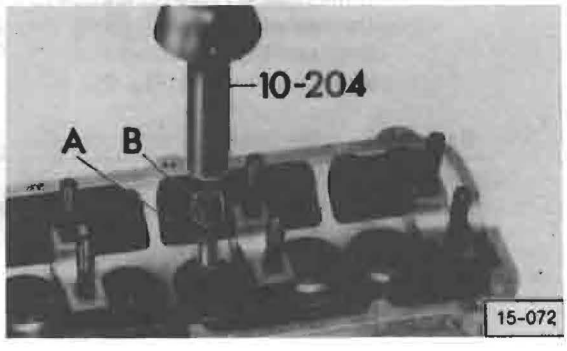

Fig. 7 Valve stem seal, installing

—slide plastic sleeve **A** onto valve stem
—lubricate valve stem seal **B**
—push seal carefully onto valve guide using plastic seal protector, otherwise seal will be damaged and engine will use too much oil

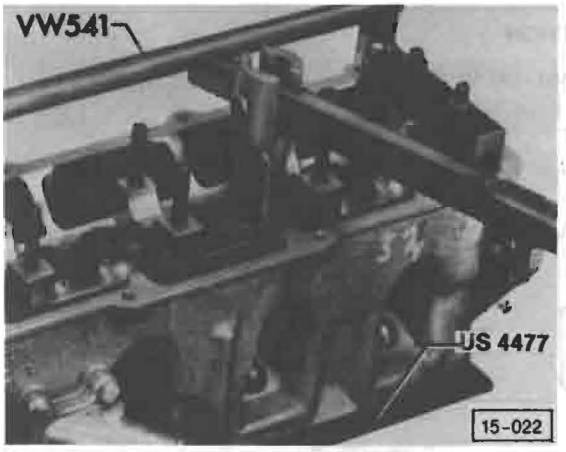

Fig. 8 Valve springs, removing/installing

—first install US 4477 under cylinder head

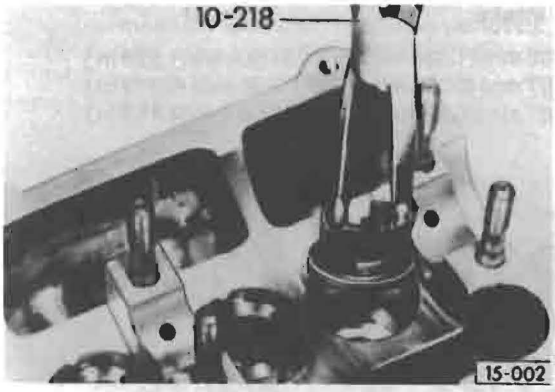

Fig. 9 Valve spring seat, removing

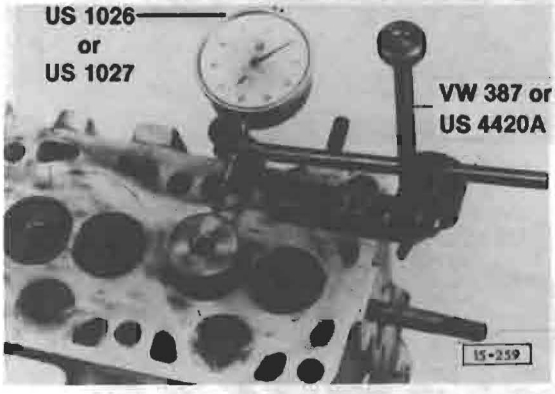

Fig. 10 Valve guide, checking for wear

—remove carbon
—Insert **new** valve into valve guide
—valve stem end must be flush with valve guide end
—rock valve back and forth against dial indicator. Dial indicator reading shows valve guide wear
- dial indicator reading = max. 1.3 mm (0.051 in.)

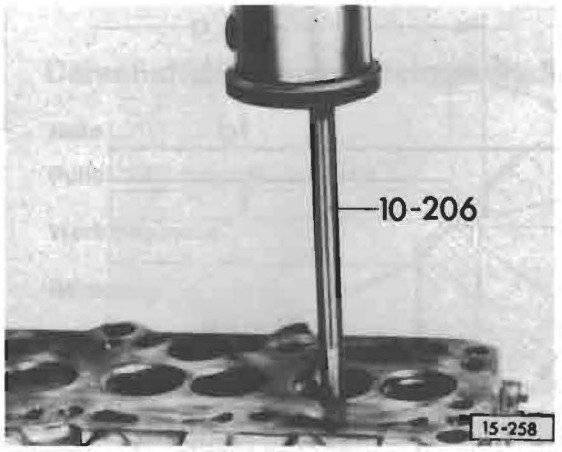

Fig. 11 Valve guide, replacing

—first check cylinder head for cracks or excessively worn seats
—press worn guides out from combustion chamber side
—coat new guides with oil and press into cold cylinder head from camshaft side. Press guides in as far as they will go

CAUTION

Once guide shoulder is seated do not use more than 1 ton pressure or guide shoulder may break

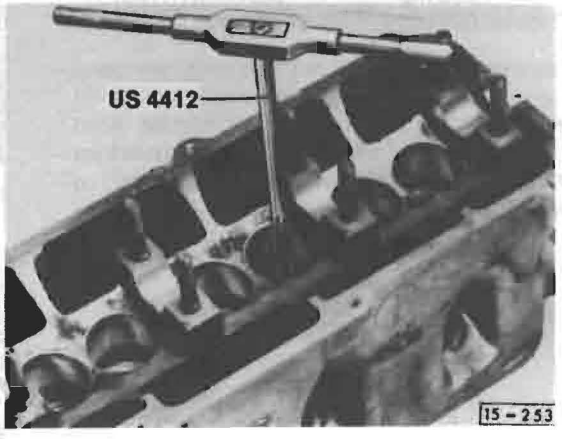

Fig. 12 Valve guides, replacing

—ream guide by hand using proper cutting lubricant

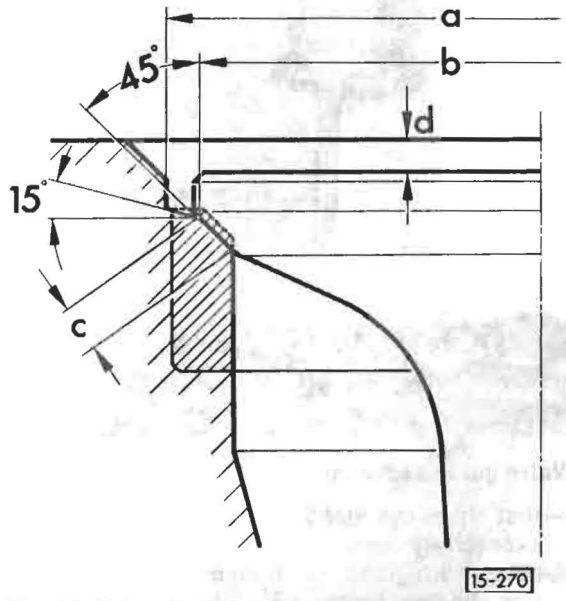

Fig. 13 Valve seats, refacing

- seat refacing pilot must be properly installed
  Valve seat angle = 45°
  Correction angle = 15°
  Dimension **d** must not be more than 1.5 mm (0.059 in.)

	Intake	Exhaust
a =	35.2 mm (1.384 in.)	33.2 mm (1.306 in.)
b =	32.8 mm (1.290 in.)	30.4 mm (1.196 in.)
c =	2.0 mm (0.078 in.)	2.4 mm (0.096 in.)

Note

Valve seats which are worn or burned can be refaced provided that correction angle and seat width are maintained. Otherwise, cylinder head must be replaced

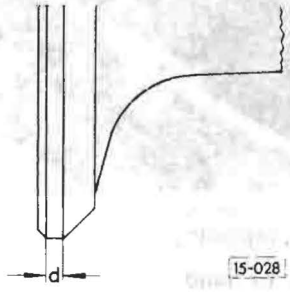

Fig. 14 Intake/Exhaust valves, refacing

- valve margin **d** must not be less than 0.5 mm (0.019 in.)

CAUTION

Do not reface exhaust valves on a machine. Lap them in by hand only

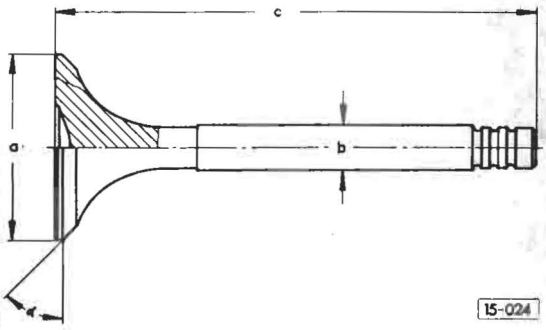

Fig. 15 Intake/Exhaust valves, refacing

	Intake	Exhaust
a =	34.00 mm (1.338 in.)	31.00 mm (1.220 in.)
b =	7.97 mm (0.314 in.)	7.95 mm (0.313 in.)
c =	104.8 mm (4.125 in.)	104.6 mm (4.117 in.)
α =	45°	45°

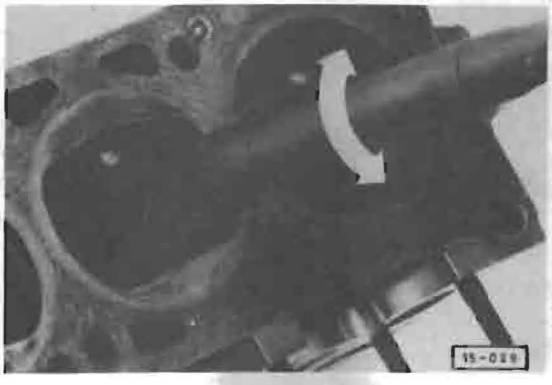

Fig. 16 Valves, lapping

—lift and turn regularly

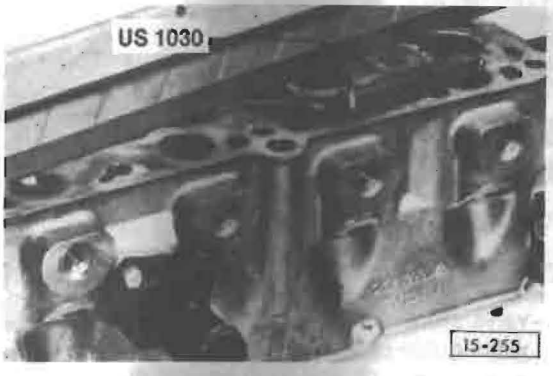

Fig. 17 Cylinder head distortion, checking

- max. 0.1 mm (0.004 in.)
- Diesel cylinder heads cannot be resurfaced

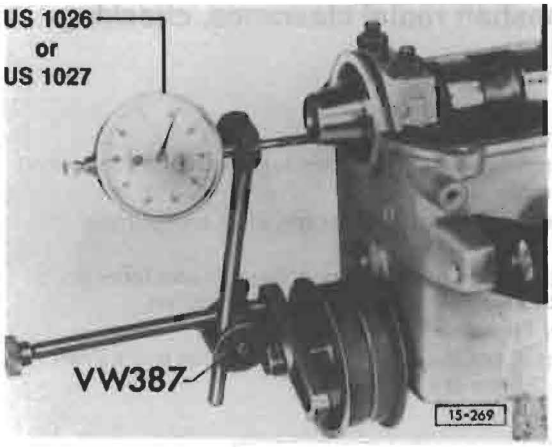

Fig. 18 Camshaft end play, checking

—measure with cam followers removed and caps 1 and 5 installed and torqued
—check that end play is not more than 0.15 mm (0.006 in.)

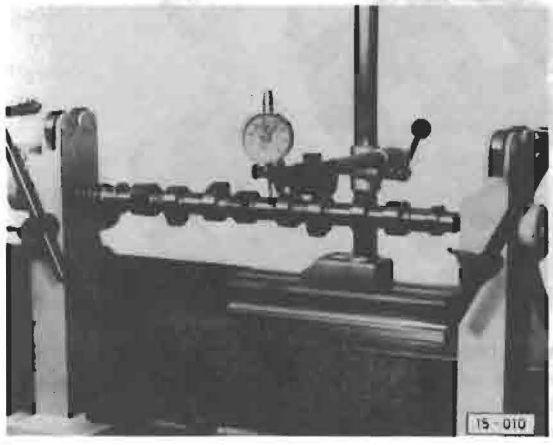

Fig. 19 Camshaft runout, checking

- max. 0.01 mm (0.0004 in.)

Camshaft oil seal, removing/installing

Note

Puller 2002 may also be used

Work sequence

Removing

—set engine at TDC for cylinder No. 1
—remove drive belt cover and drive belt
—loosen camshaft sprocket bolt 1/2 turn and tap sprocket with rubber hammer
—remove bolt and sprocket



—unscrew inner part (arrow A) of oil seal extractor 2085 2 turns (approx. 3mm/1/8 in.) out of outer part
—lock in position with knurled screw (arrow B)
—to guide extractor, screw sprocket bolt into camshaft until it projects about 15 mm (5/8 in.)
—lubricate threads on tapered end of seal extractor

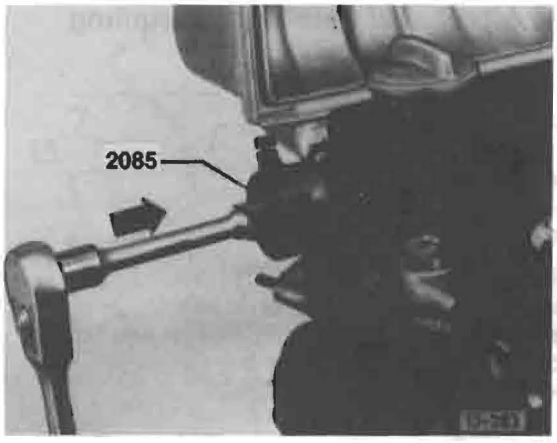

—position seal extractor and screw it into oil seal as far as possible by pushing firmly in direction of arrow
—loosen knurled screw and turn inner part in against camshaft until oil seal is pulled out
—clamp extractor in vise and remove oil seal with pliers

Installing

—coat seal lips and outer edge of seal with oil

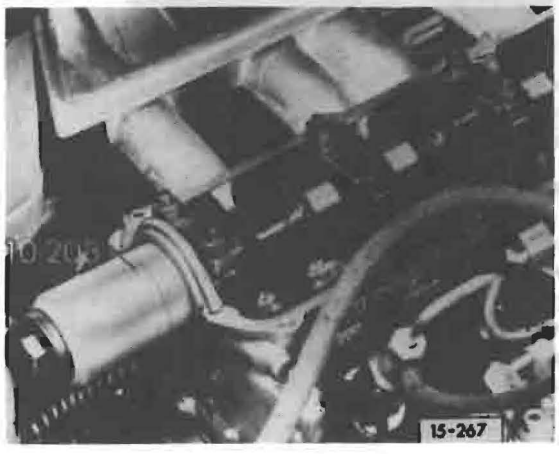

—press seal in flush

Camshaft radial clearance, checking

Work sequence

– remove camshaft sprocket
– remove camshaft and cam followers (mark followers)
– remove oil seal
– clean camshaft bearing caps, seats and journals

– place camshaft on cylinder head so cam lobes do not touch valve spring retainers or valves
– lay Plastigage® across journal
– install bearing caps in correct position and tighten to 20 Nm (14 ft lb)

CAUTION
Do not rotate camshaft.

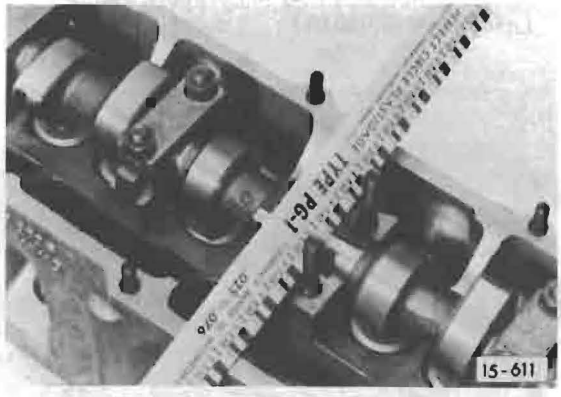

– remove bearing caps
– compare width of Plastigage® with measuring scale
wear limit – 0.1 mm (0.004 in.)

Note

If this limit is exceeded, check the radial clearance again with a new camshaft.

If the clearance with a new camshaft also exceeds the wear limit, the cylinder head must be replaced.

– after completing repairs, check and adjust valve clearances

Compression (Diesel), checking

Work sequence

CAUTION

To avoid damage, keep injection parts clean when removing, installing, disassembling and assembling

- engine oil temp 30 °C (86 °F)

—disconnect wire from fuel shutoff solenoid on injection pump and insulate
—clean all injector pipe fittings
—remove injector pipes with tool 3035

—disconnect fuel return hoses
—remove injectors using US 2775 or equivalent
—remove heat shields
—place old heat shield in cylinder to be checked

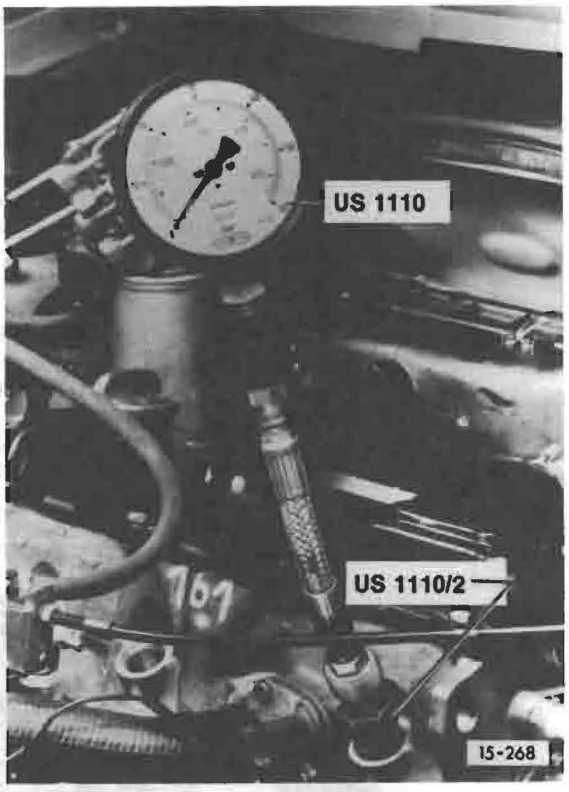

—screw in adaptor and compression tester
—set parking brake and place transmission in neutral
—operate starter
- 28–34 bar (406–493 psi)
- maximum pressure differential between highest and lowest cylinder, 5 bar (73 psi)

—repeat for other three cylinders

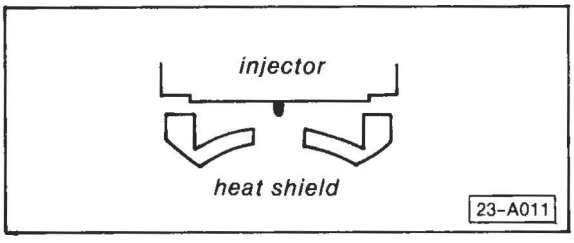

—install new heat shields as shown
—reinstall injectors and tighten to 70 Nm (51 ft lb)
—reconnect fuel return hoses

—reinstall injector pipes and tighten to 25 Nm (18 ft lb)
—reconnect wire to fuel shutoff solenoid on injection pump
—start engine and accelerate a few times to clear air bubbles

Note

Cylinder heads with cracks between valve seats or between a valve seat and spark plug thread can be used again without reducing service life provided that cracks are small and not more than 0.5 mm (0.019 in.) wide or that only first coil of plug thread is cracked

Note

Cylinder head can be removed and installed with engine installed

CAUTION

Coolant/antifreeze **must not** be reused when replacing engine, cylinder head, cylinder head gasket, radiator and heater core.

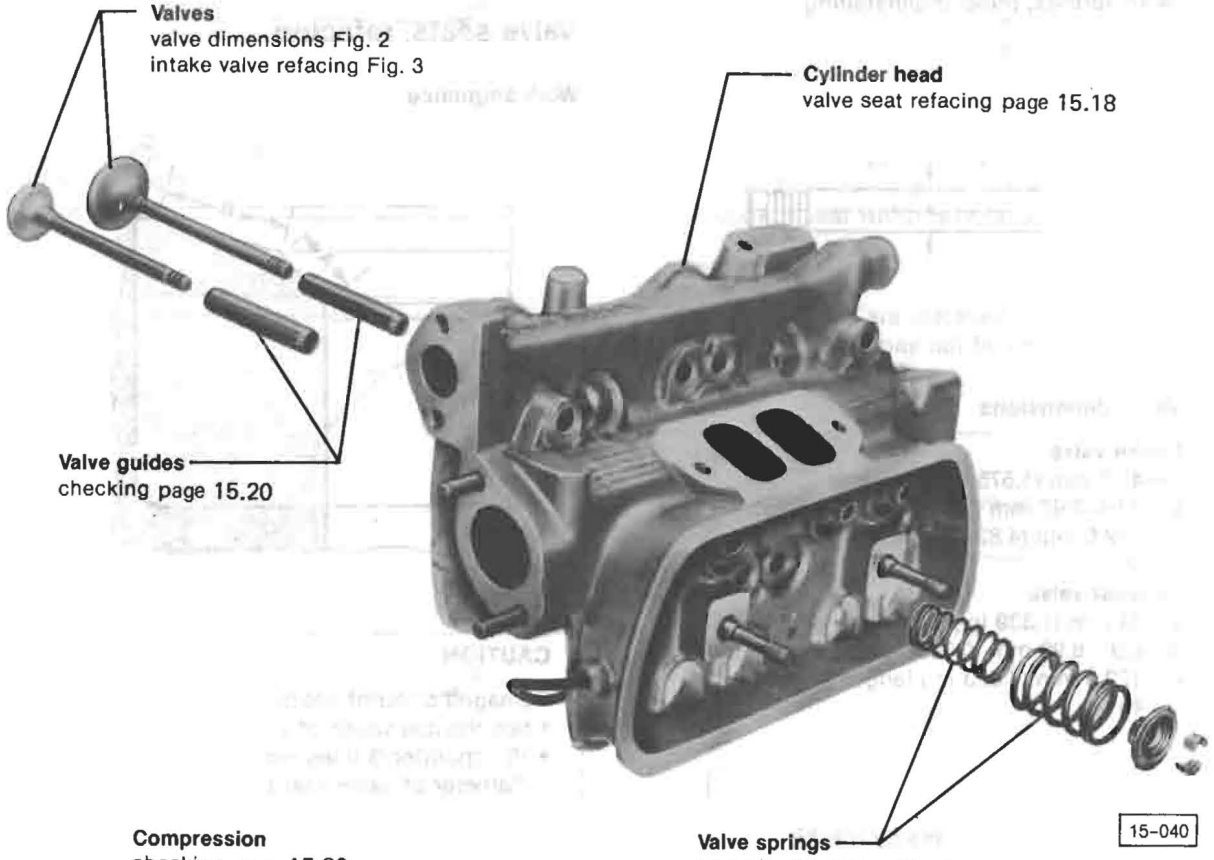

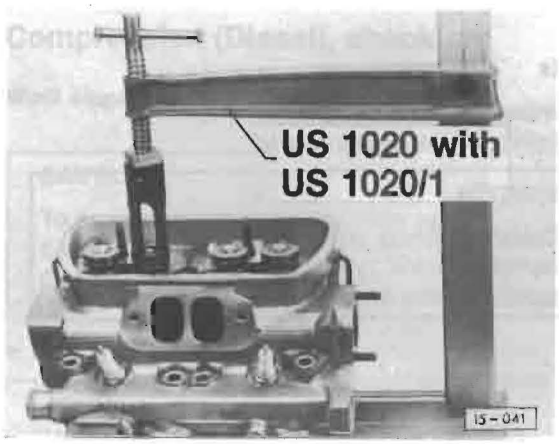

Fig. 1 Valve springs, removing/installing

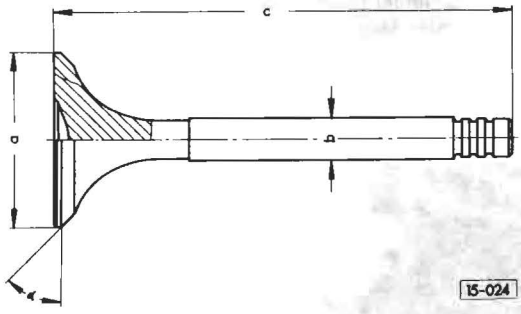

Fig. 2 Valve, dimensions

Intake valve
a = 40.0 mm (1.575 in.) diameter
b = 7.96–7.97 mm (0.313–0.314 in.) dia.
c = 122.5 mm (4.823 in.) length
α = 45°

Exhaust valve
a = 34 mm (1.339 in.) diameter
b = 8.91–8.92 mm (0.3508–.3512 in.) dia.
c = 122.5 mm (4.823 in.) length
α = 45°

CAUTION

Do not rework **exhaust valves** by machine, lap by hand only

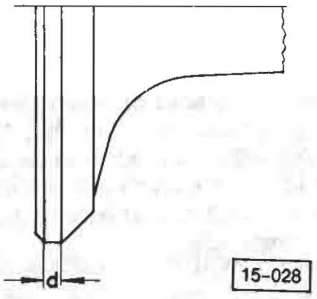

Fig. 3 Intake valves, refacing

- valve margin **d** must not be less than 0.5 mm (0.020 in.)

Valve seats, refacing

Work sequence

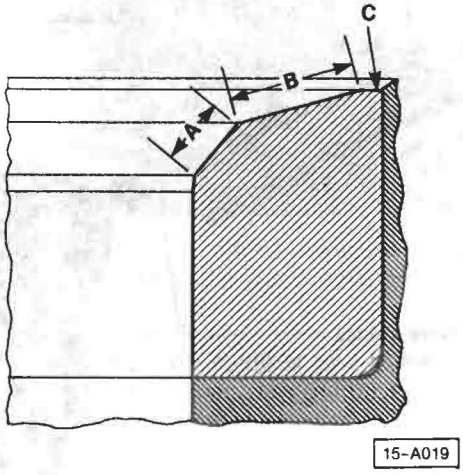

CAUTION

Damaged or burnt seats can be refaced **if**:
- permissible width of seat **A** is maintained
- 15° chamfer **B** does not exceed outer diameter of valve seat insert in cylinder head at **C**

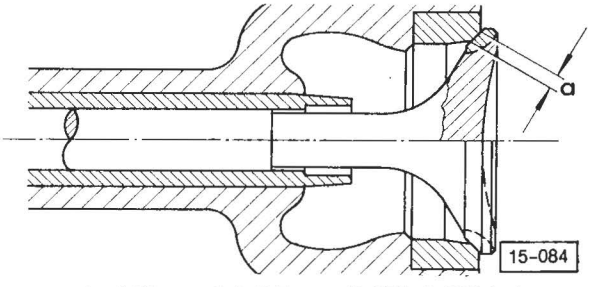

— seat width **a** = 1.4–2.5 mm (0.055–0.098 in.)

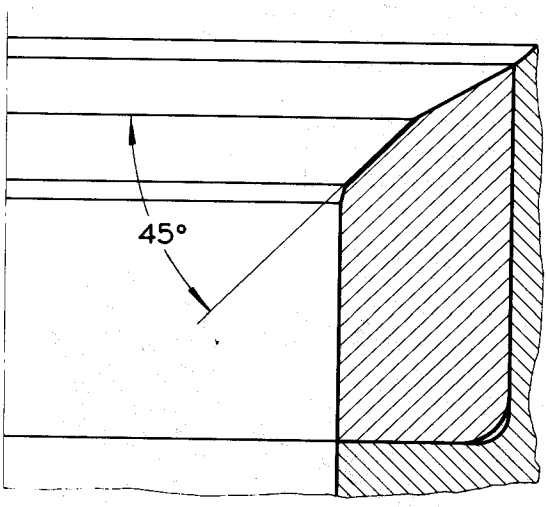

15-085

— reface valve seats to 45° angle
  • stop cutting as soon as complete seat is cleaned

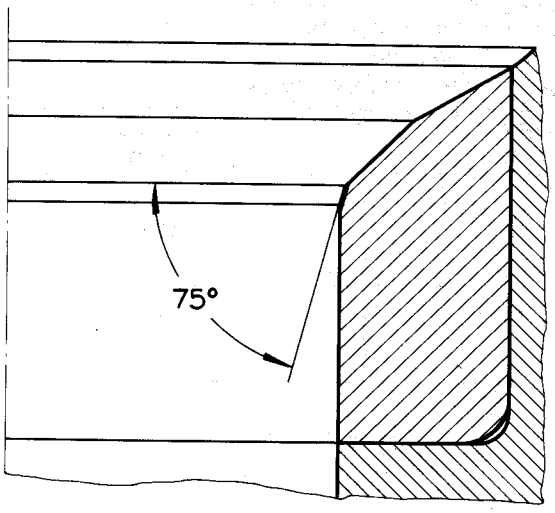

15-086

— reface surface to 75° angle
  • slightly chamfer lower edge of valve seat

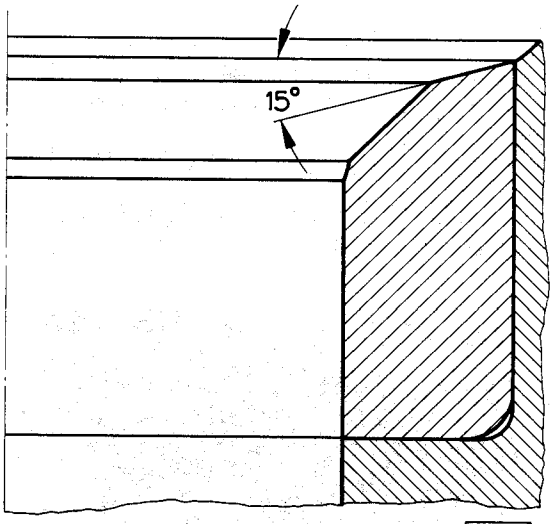

15-431

— reface surface to 15° angle
  • chamfer upper edge of valve seat until correct seat width is obtained

Note

When new valves are installed in properly reworked seats, it may not be necessary to lap in valves

CAUTION

After lapping valve, remove all traces of grinding paste

Valve guides, checking

Note

When repairing engines with leaking valves it is not sufficient to rework or replace valve seats and valves.
It is also necessary to check valve guides for wear.
This is particularly important on engines which have considerable mileage.

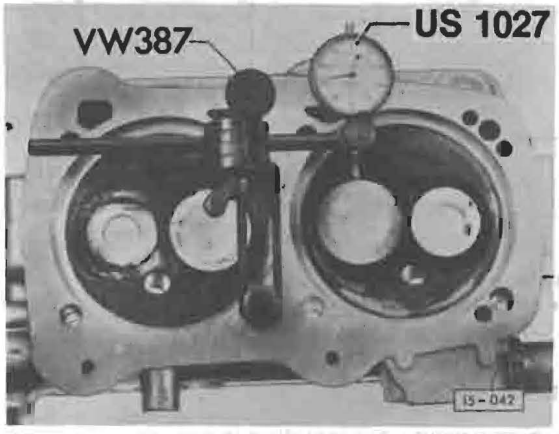

— remove carbon
— insert new valve into valve guide
  • valve stem must be flush with valve guide end
— rock valve back and forth against dial indicator (arrow)
  • max. 1.2 mm (0.047 in.)

Compression pressure, checking

- engine oil temperature minimum 30 °C (86 °F)
- throttle valve open fully (accelerator pedal in full throttle position)

— remove all spark plugs
— disconnect coil wire at ignition distributor and connect to ground with clamp



— check compression with tool US 1120
— operate starter until tester no longer indicates a rise in pressure

Compression pressure values

Engine code	Compression pressure
1.9L 2.1L	10 – 13 bar (145 – 189psi)
Minimum	8 bar (116 psi)

CAUTION

Coolant/antifreeze **must not** be reused when replacing engine, cylinder head, cylinder head gasket, radiator and heater core.

When replacing coolant/antifreeze solution in all Volkswagen models, all model years, use phosphate-free coolant/antifreeze only, **ZVW 237 104**.

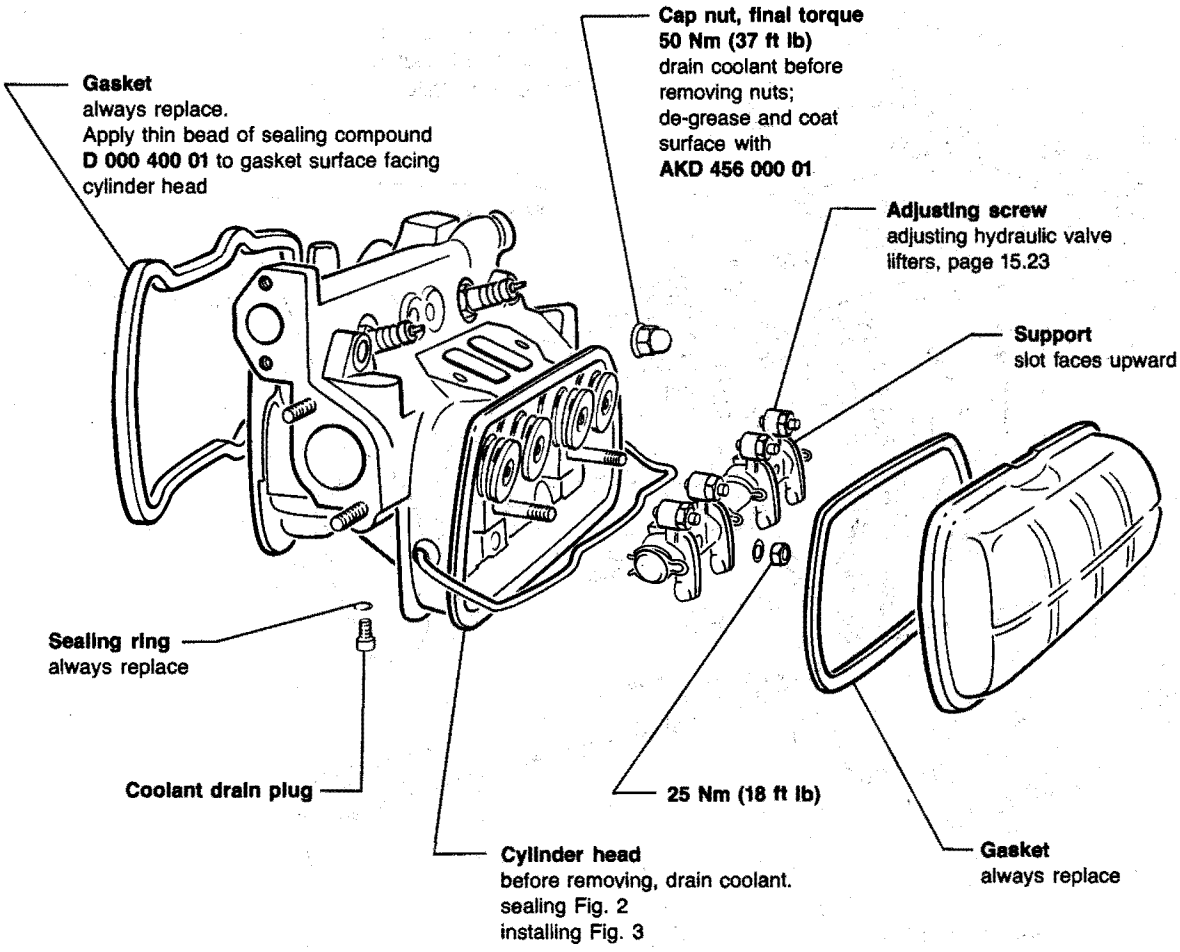

15-633

CAUTION

Coolant/antifreeze **must not** be reused when replacing engine, cylinder head, cylinder head gasket, radiator and heater core.

When replacing coolant/antifreeze solution in all Volkswagen models, all model years, use phosphate-free coolant/antifreeze only, **ZVW 237 104.**

Note

Cylinder head can be removed and installed with engine installed.

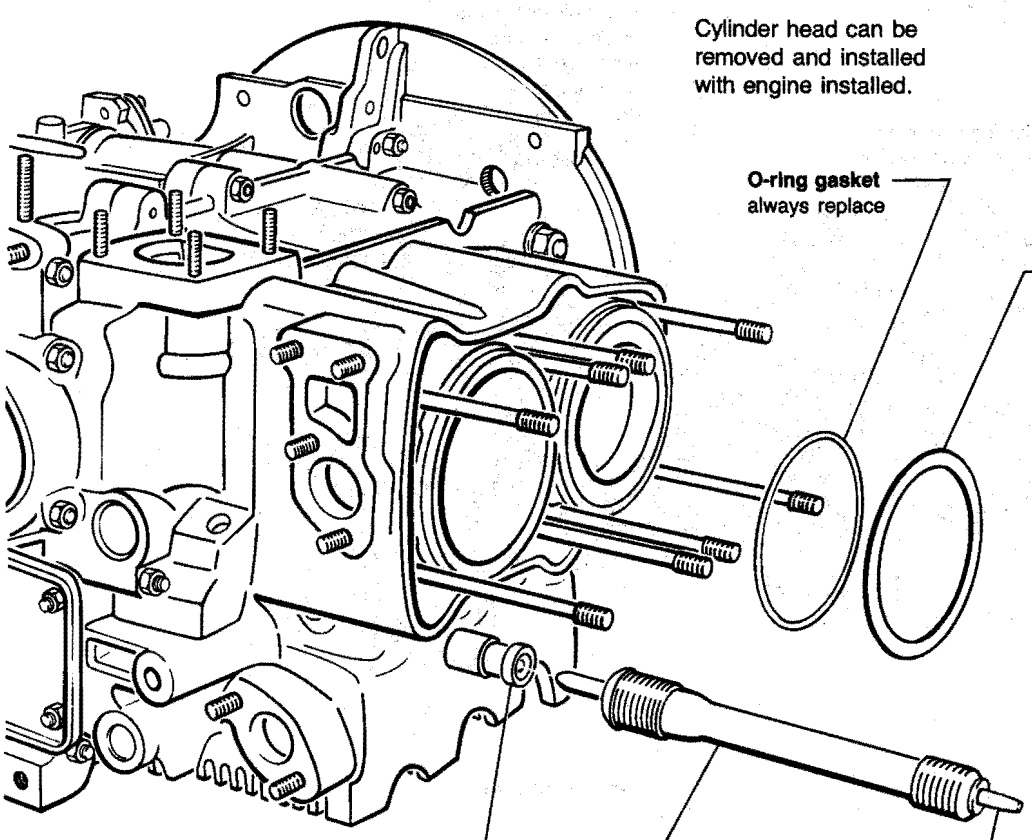

O-ring gasket
always replace

Metal sealing ring
always replace

Hydraulic valve lifter
do not interchange.
adjusting, page 15.23
bleeding, page 15.24

Pushrod tube
small end faces head.
Pretensioning Fig. 1
replacing page 15.25

Pushrod
max. run-out 0.3 mm (0.012 in.).
guide pushrod carefully into seat of hydraulic valve lifter

15-632

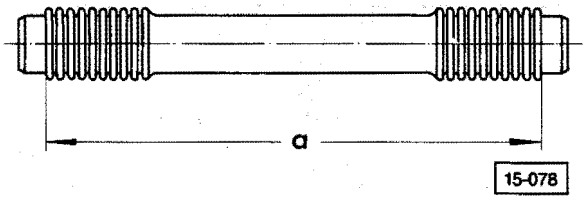

Fig. 1 Pushrod tube, pretensioning

— pretension tube to correct length
  • **a** = approximately 194 mm (7.6 in.)
— when installing, seam faces upward and small end to cylinder head
— always replace sealing rings, head gasket
  • pushrod tubes can be replaced with engine installed

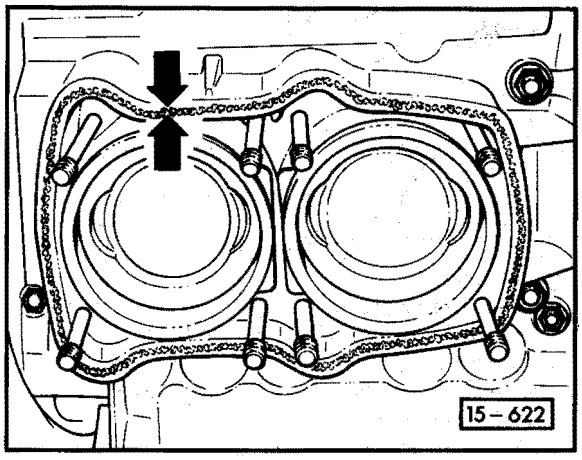

Fig. 2 Cylinder head, sealing

Applying sealant D 000 400 01

To improve sealing of painted/unpainted sealing surfaces on cylinder head, use **D 000 400** sealant.

— if paint is damaged, clean cylinder head sealing surface with fine sand paper
— clean sealing surface with solvent
— apply 1 to 2 mm (3/64-5/64 in.) bead of sealing compound **D 000 400** in the center of the new water jacket gasket (**arrows**)

CAUTION

DO NOT USE TOO MUCH SEALANT. Excessive sealant could plug cylinder head coolant passages or hydrolock cap nuts.

Note

Cylinder head must be installed within 45 minutes of the sealant application.

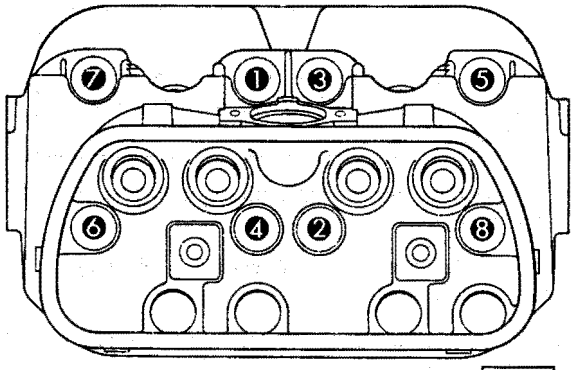

Fig. 3 Cylinder head, installing

— tighten cylinder head at stud **1** with cap nut just enough so that all remaining **7** cap nuts can be installed
— coat surface of cap nut with **AKD 456 000 01** sealing compound

Torque sequence

CAUTION

Do NOT use click type torque wrench. Use only beam or dial type wrench.

First stage: tighten cap nuts in numbered sequence (see above) to 10 Nm (7 ft lb)

Note

Be sure that push rod tubes are properly seated.

Second stage: tighten cap nuts, in numbered sequence to 50 Nm (37 ft lb)

— recheck final 50 Nm (37 ft lb)
— reinstall push rods, rocker arms
  • push rods must be properly seated before tightening rocker arms
  • torque: 25 Nm (18 ft lb)

Hydraulic valve lifters, adjusting

Note

Never repair valve lifters; if worn or damaged, replace complete assembly.

Valve lifters can be removed and replaced without engine removal and without major engine disassembly.

Intermittent valve noises are normal upon starting, sudden acceleration, high temperatures or high engine speed.

CAUTION

If metal particles are found in oil pan, remove, disassemble, clean and reinstall all valve lifters from position removed.

— guide pushrod carefully into socket of hydraulic valve lifter

If rocker shafts have been removed, the following adjustment is necessary:

— backout adjusting screws in rocker arms until ball shaped end is flush with surface of arm
— turn crankshaft until cylinder No. **1** is at TDC
  • mark on rotor in line with mark on distributor housing
— turn adjusting screws in until they just touch valve stems
— turn adjusting screws 2 turns clockwise and tighten lock nuts
— rotate crankshaft 180° and adjust next cylinder
— repeat until all cylinders are adjusted

Hydraulic valve lifters, bleeding

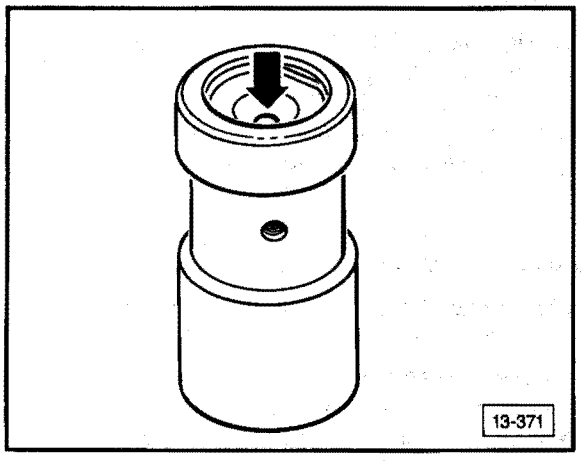

— before installing, ensure valve lifter is bled correctly
  • check by applying firm thumb pressure on push rod socket in direction of arrow. Lifter should not move.

If **NO**, bleed lifter as follows:

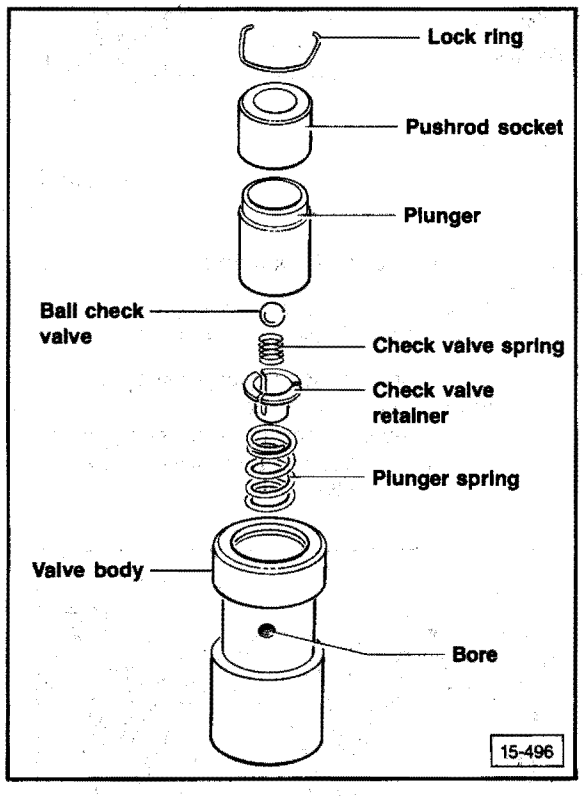

— pry out lock ring
— remove pushrod socket, plunger, ball check valve with spring, check valve retainer and plunger spring from body
— fill valve lifter body with oil up to bleed hole
— insert plunger spring
— install plunger with ball check valve, spring and valve retainer and push downward; at same time, open ball check valve with scribe

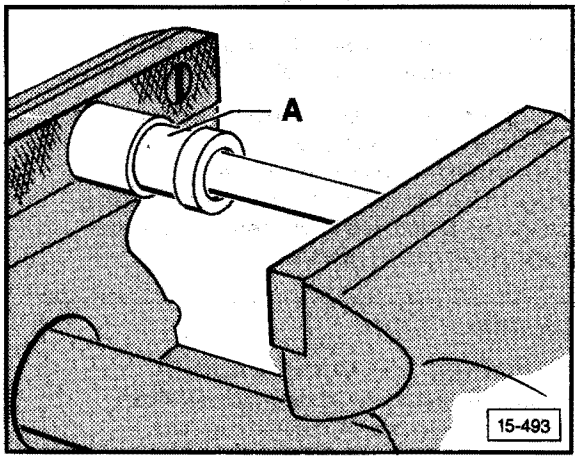

— insert pushrod in socket and slowly press together with valve guide or sawed-off pushrod in vise (bore **A** must face upward) or in press until lock ring can be installed
— install lock ring

Pushrod tubes, replacing

Note

Pushrod tubes supplied as replacement parts can be installed with engine in place.

— remove valve cover
— remove rocker arm shaft, pull pushrod out
— remove lower cover plate
— remove defective pushrod tube with pliers or screwdriver

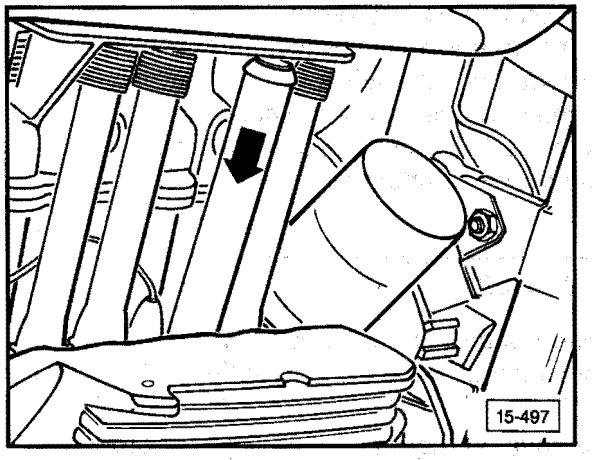

— squeeze new pushrod tube together and insert with new sealing rings as shown (**arrow**) (tube seam faces upward, small end to head)
— insert pushrod and install rocker arm shaft

CAUTION

Guide pushrod carefully into seat of hydraulic valve lifter.

If pushrod rests on edge of lifter basic setting will be incorrect and lifter will be damaged when engine is started.

— adjust hydraulic valve lifters, see page 15.23

Cylinder head, resealing

Note

To reseal cylinder heads, follow this procedure. Always do both sides. Cylinder heads can be removed without removing the engine.

Removing

- disconnect battery ground strap
- remove rear mattress (where applicable), carpet, engine cover
- remove air cleaner assembly
- remove A/C compressor from bracket, leave hoses attached

WARNING

Fire hazard. Do not smoke or have anything in area that can ignite fuel.

- remove left/right fuel rails, injector ground wires and intake manifolds
- remove left/right splash shields
- remove push rod tube shields
- disconnect oxygen sensor
- remove coolant drain plugs **1** at both cylinder heads, drain coolant from engine
- drain engine oil, remove oil filter

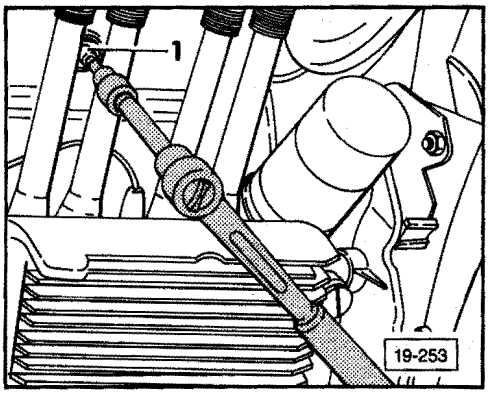

Note

Do not reinstall oil drain plug until repair is completed.

- remove spare tire cover under front of vehicle, disconnect coolant hoses
- reconnect radiator coolant hoses
- close spare tire cover
- remove coolant pump

- remove exhaust system, including cross-over pipes, muffler with converter and exhaust heat shield
- remove crankshaft pulley
  - see Repair Group 13
- remove power steering pump
- remove coolant cross-over pipes at front/rear of cylinder head
- remove valve covers, rocker arms, push rods, oil filler pipe

Note

Mark push rods for reinstalling to original location.

- remove cylinder head cap nuts, push rod tubes and cylinder head
  - stuck cylinder sleeves may be removed by lightly tapping with small solid rubber mallet
- clean old gasket material from cylinder heads, engine block, valve covers
- inspect sealing surface of cylinder head, replace if pitting or cavitation present
- mark matching numbers on piston/cylinders
- pull out cylinder sleeves with tool **3092** until piston circlip is visible
  - see Repair Group 13
- remove piston circlips, wrist pins with tools **3091, 3159**
  - see Repair Group 13

Installing

CAUTION

Always replace gaskets, seals, O-rings, lubricants.

CAUTION

Part numbers are listed for reference only. Always consult with the Parts Department for latest information.

- inspect cylinder head studs for corrosion, and replace as required
- clean wrist pins, cylinder sleeves, pistons
- replace both cylinder sleeve O-rings
- reinstall piston and cylinder sleeve onto corresponding connecting rod
  - install wrist pin to connecting rod
  - see Repair Group 13

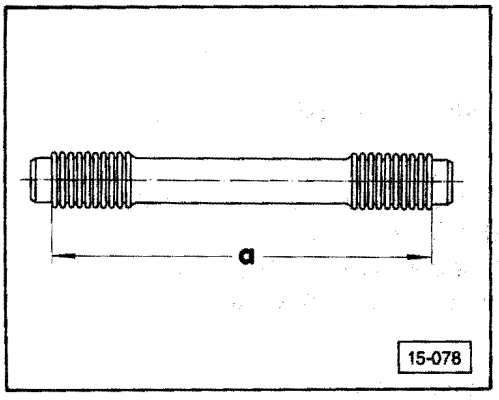

- clean push rod tubes, rocker arms, valve covers, cylinder head cap nuts
- measure and adjust push rod tubes to length **a**

  a = approximately 194 mm (approximately 7.6 in.)

- install new cylinder head gasket

CAUTION

Do not use too much sealant. Excessive sealant could plug cylinder head coolant passages or hydrolock cap nuts.

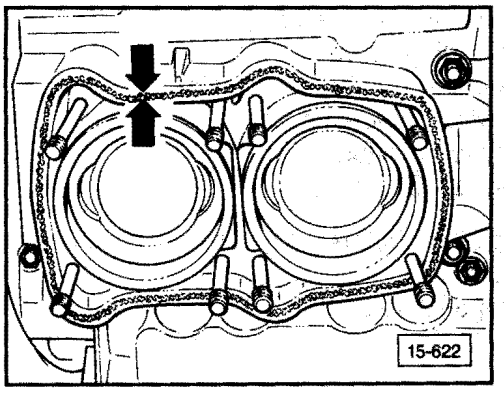

- apply cylinder head sealant Part No. **D 000 400 01** in 1.0-2.0 mm (3/64-5/64 in.) bead (**arrows**) in center of gasket side facing cylinder head
- install cap nut location in 1.0 mm (3/64 in.) bead
- reinstall cylinder heads, push rod tubes, seam side up

CAUTION

DO NOT use click type torque wrench. Use only beam or dial torque wrench.

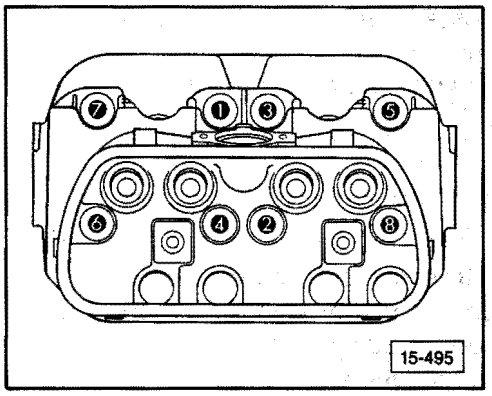

- tighten cylinder head at stud **1** with cap nut just enough so that remaining 7 cap nuts can be installed

Torque sequence

Note

Ensure that push rod tubes are properly seated.

First stage: tighten cap nuts in numbered sequence to 10 Nm (7 ft lb)

Second stage: tighten cap nuts in numbered sequence to 40 Nm (30 ft lb)

Third stage: tighten cap nuts in numbered sequence to 50 Nm (37 ft lb)

- recheck final 50 Nm (37 ft lb)
- reinstall push rods, rocker arms
  - push rods must be properly seated before tightening rocker arms
  - torque: 25 Nm (18 ft lb)

Hydraulic valve lifters, adjusting

- back out adjusting screws in rocker arms until ball shaped end is flush with surface of arm
- turn crankshaft until cylinder No. **1** is at TDC
  - mark on rotor must be in line with mark on distributor housing
- turn adjusting screws in until they just touch valve stems
- turn adjusting screws 2 turns clockwise and tighen lock nuts
- rotate crankshaft 180° clockwise and adjust next cylinder
- repeat until all cylinders are adjusted

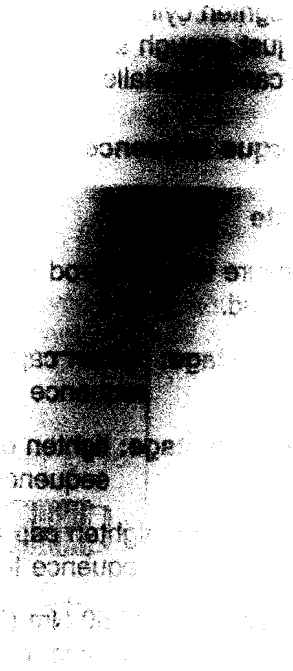

- reinstall all other components in reverse order of removal
- check expansion tank pressure cap with **VAG 1274/99**

CAUTION

Coolant/antifreeze must not be reused when performing this procedure. When replacing coolant solution in all Volkswagen models, all years, use phosphate-free coolant **ZVW 237 104.**

- reinstall coolant drain plugs between cylinders
- refill with coolant
- reinstall engine drain plug, refill with oil
- reconnect battery ground strap
- remove radiator grille
- raise front of vehicle approximately 40 cm (16 in.) under cross member
- bleed air from coolant system
- lower vehicle to ground
- reinstall radiator grille
- pressure check cooling system for leaks with tool **VAG 1274/99**
- check and adjust engine specifications, as necessary

Gasoline additive

"Autobahn Gasoline Additive" has been tested by Volkswagen, and found to be effective in reducing carbon deposits that result from fuel and lubricating oil residue. The additive works best with unleaded gasoline, but also works with leaded fuel.

"Autobahn Gasoline Additive" is supplied by Volkswagen of America under Part No. ZVW 246 001.

Note

Read product label for additional information. Read all cautions and warnings.

Caution

Do not exceed this recommendation:

Oil change interval Miles	Max. Treatments between oil changes
5,000	2
7,500	4

Excessive carbon deposits reduce engine performance by:

- idle hunting (idle speed goes up and down)
- poor hot or cold starting (starter cranking takes longer)
- engine run-on (dieseling)
- pinging during full-throttle acceleration

To help clean out carbon deposits and minimize future carbon build-up:

— make sure that ignition and fuel systems are adjusted to specifications
— add one (1) 20 oz. bottle "Autobahn Gasoline Additive" to fuel tank. Fill tank completely. Do not refill until the gauge reads "1/4"
— use only gasoline with a detergent additive package. Information about fuel composition is available from any gas station or from the station's fuel supplier.

CAUTION

Part numbers are for reference only. Always consult your Parts Department for latest information.

Engine Lubrication System

Index

Air-cooled
—Assembly 17.2
—Oil cooler 17.2
checking 17.3
—Oil pressure switch 17.2
checking 17.3
removing 17.3
—Oil pump 17.2
removing 17.3

Diesel
—Assembly
—Oil filter 17.4, 17.5
—Oil cooler 17.4
checking 17.5
—Oil pan 17.4, 17.6
—Oil pump 17.4, 17.5
—Oil pressure switch 17.4, 17.6

Water-cooled /Syncro
–Assembly 17.7
–Heating pipe, crankcase breather 17.9
–Oil pressure switch 17.9
–Oil pump 17.9

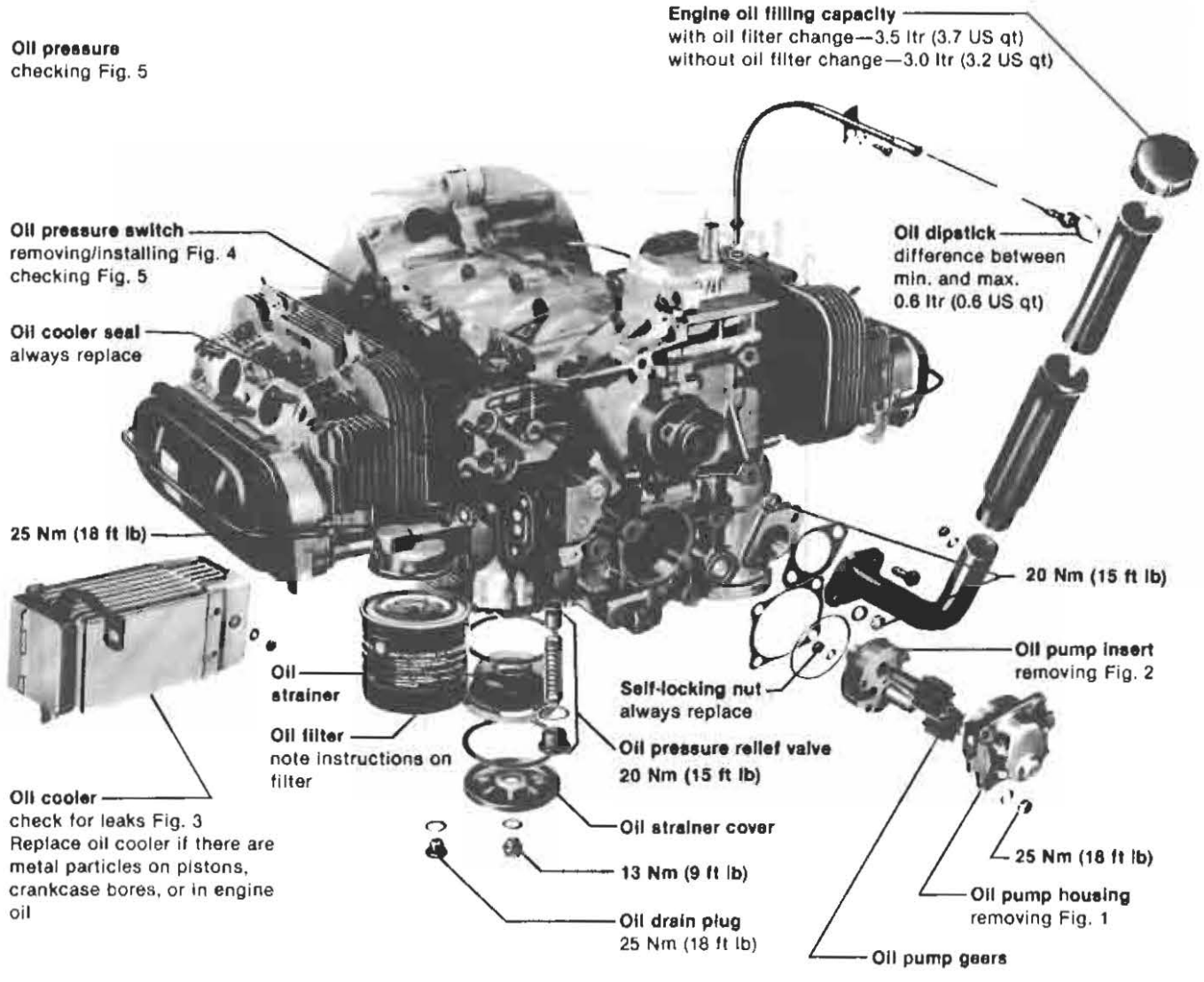
Oil pressure
checking Fig. 5
Engine oil filling capacity
with oil filter change—3.5 ltr (3.7 US qt)
without oil filter change—3.0 ltr (3.2 US qt)
Oil pressure switch
removing/installing Fig. 4
checking Fig. 5
Oil dipstick
difference between
min. and max.
0.6 ltr (0.6 US qt)
Oil cooler seal
always replace
25 Nm (18 ft lb)
20 Nm (15 ft lb)
Oil pump insert
removing Fig. 2
Oil
strainer
Self-locking nut
always replace
Oil filter
note instructions on
filter
Oil pressure relief valve
20 Nm (15 ft lb)
Oil cooler
check for leaks Fig. 3
Replace oil cooler if there are
metal particles on pistons,
crankcase bores, or in engine
oil
Oil strainer cover
25 Nm (18 ft lb)
13 Nm (9 ft lb)
Oil pump housing
removing Fig. 1
Oil drain plug
25 Nm (18 ft lb)
Oil pump gears
17-064

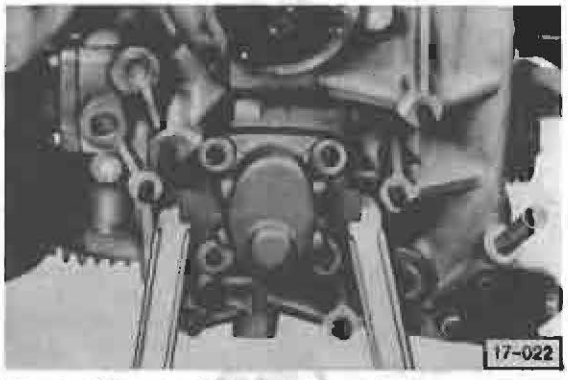

Fig. 1 Oil pump housing, removing



Fig. 2 Oil pump insert, removing



Fig. 3 Oil cooler, checking for leaks

- test pressure max. 5.9 bar (85 psi)

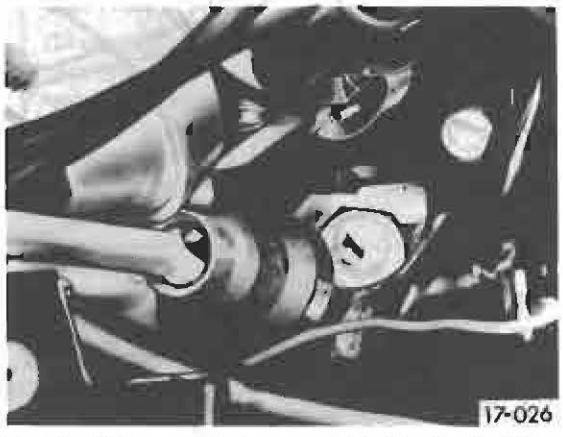

Fig. 4 Oil pressure switch, removing/installing

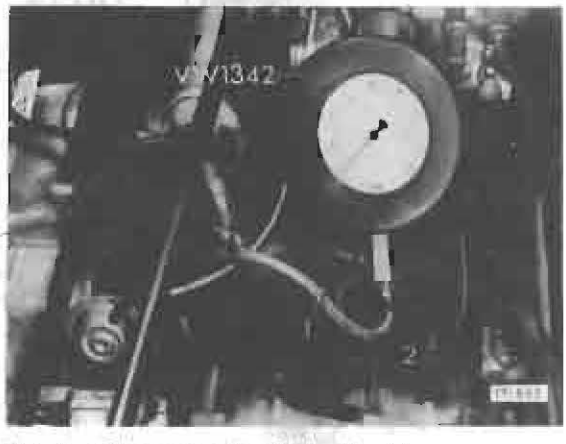

Fig. 5 Oil pressure/switch, checking

- engine oil temperature should be 80 °C (176 °F)

— install oil pressure gauge/adapter in place of oil pressure switch
— install switch in gauge
— connect wire **1** to oil pressure switch and to wire from oil pressure warning light
— connect wire **2** to ground
— turn ignition **ON**
- oil pressure warning light must light up
if **NO**, switch is defective

— start engine
- oil pressure warning light must go out at oil pressure of 0.15—0.45 bar (2—6.5 psi)

— increase engine speed
- at 2000 rpm, pressure should be min. 2.0 bar (29 psi)

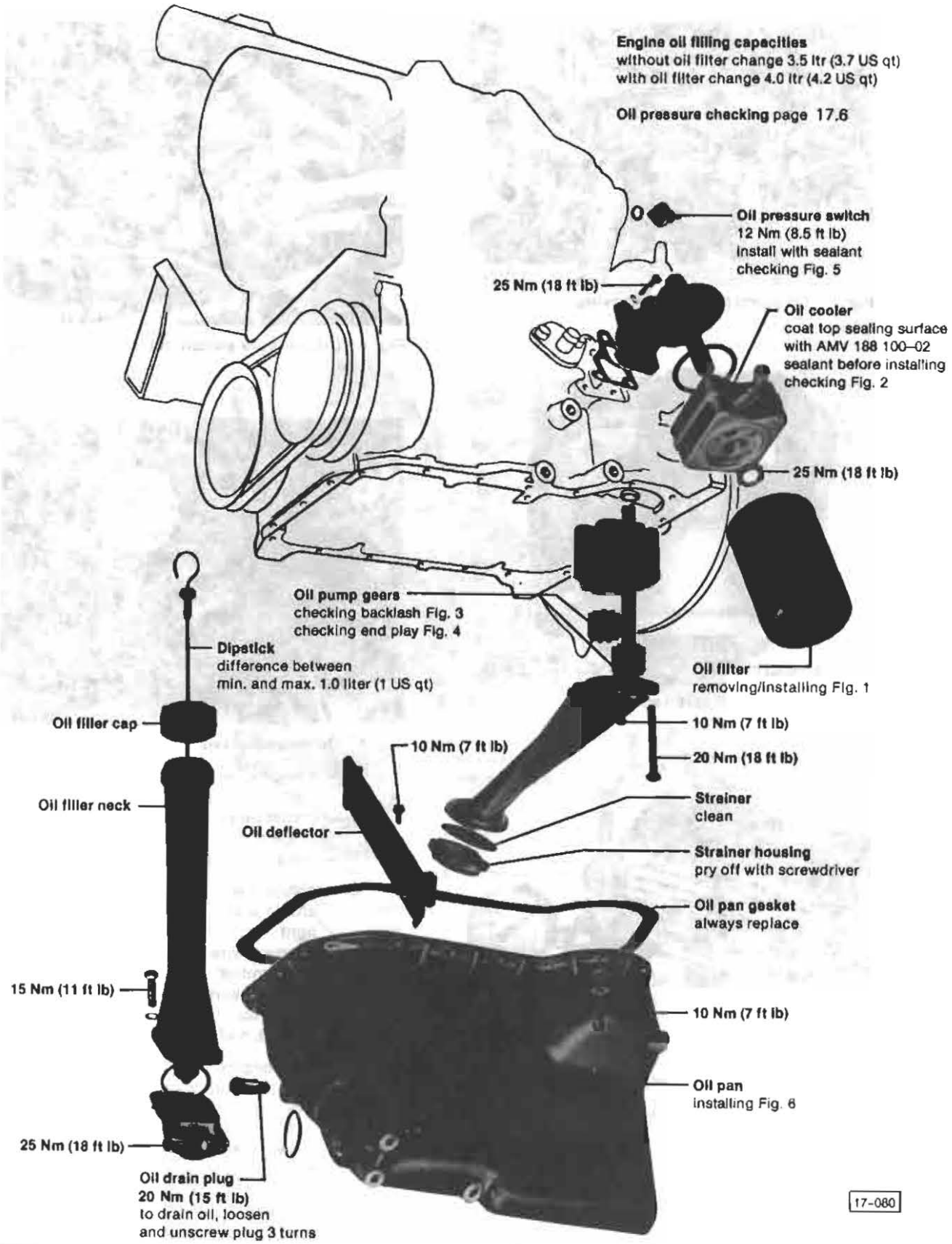
Engine oil filling capacities
without oil filter change 3.5 ltr (3.7 US qt)
with oil filter change 4.0 ltr (4.2 US qt)
Oil pressure checking page 17.6
Oil pressure switch
12 Nm (8.5 ft lb)
install with sealant
checking Fig. 5
25 Nm (18 ft lb)
Oil cooler
coat top sealing surface
with AMV 188 100–02
sealant before installing
checking Fig. 2
25 Nm (18 ft lb)
Oil pump gears
checking backlash Fig. 3
checking end play Fig. 4
Dipstick
difference between
min. and max. 1.0 liter (1 US qt)
Oil filter
removing/installing Fig. 1
Oil filler cap
10 Nm (7 ft lb)
20 Nm (18 ft lb)
10 Nm (7 ft lb)
Oil filler neck
Oil deflector
Strainer
clean
Strainer housing
pry off with screwdriver
Oil pan gasket
always replace
15 Nm (11 ft lb)
10 Nm (7 ft lb)
Oil pan
installing Fig. 6
25 Nm (18 ft lb)
Oil drain plug
20 Nm (15 ft lb)
to drain oil, loosen
and unscrew plug 3 turns
17-080



Fig. 1 Oil filter, removing/installing

– loosen with US 4474

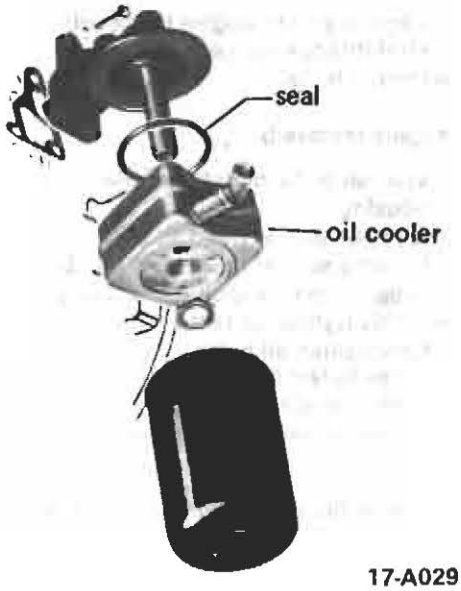

Fig. 2 Oil cooler, checking

If oil contamination is found in the cooling system, one possible source of leakage is the oil cooler.

– remove oil cooler from vehicle
– plug one hose fitting and pressurize remaining fitting with air
– submerge cooler in water and check for air bubbles which indicate a leak in cooler
– if leaking is noticed, replace cooler

Note

Always use a new seal coated with clean engine oil when reinstalling oil cooler.

– clean cooling system thoroughly (use Prestone Super Flush AS - 107 or equivalent)

CAUTION

Oil contamination of coolant may have deteriorated coolant hoses. Inspect and replace hoses depending on condition and/or length of time oil has been in cooling system.

CAUTION

Do not loosen oil cooler when removing oil filter

– when installing, hand tighten according to instructions on filter element or carton

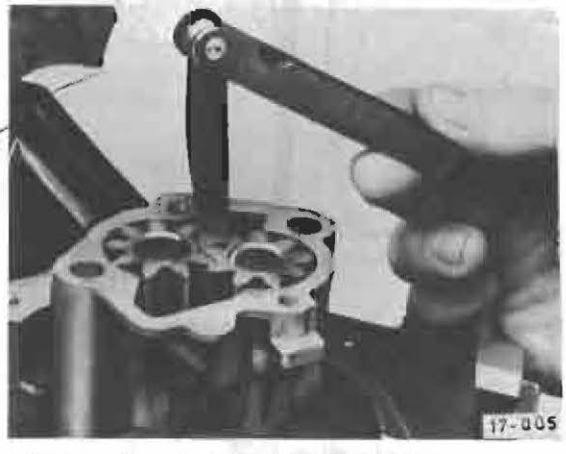

Fig. 3 Oil pump backlash, checking

- new: 0.05 mm (0.002 in.)
- wear limit: 0.2 mm (0.008 in.)

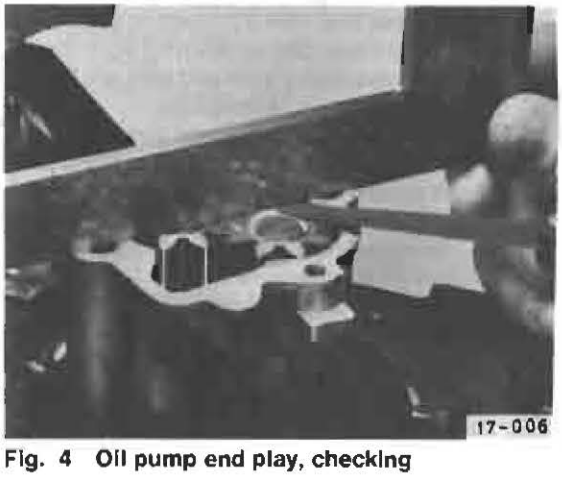

Fig. 4 Oil pump end play, checking

- maximum 0.15 mm (0.006 in.)

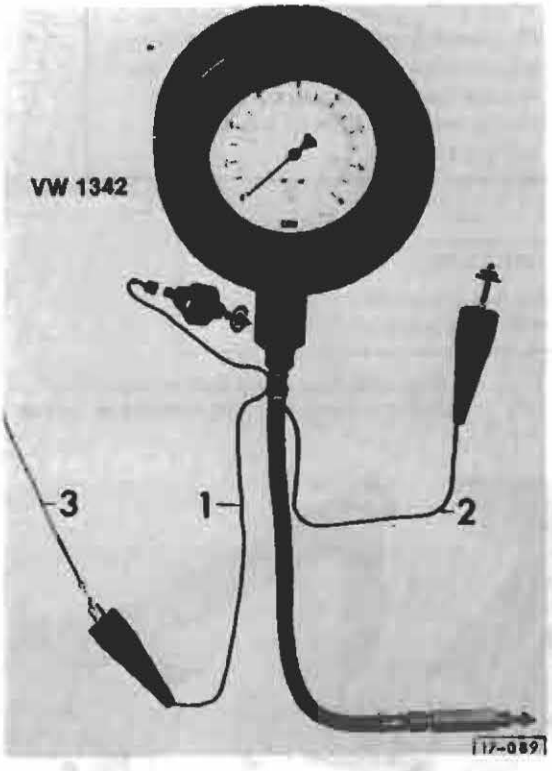

Fig. 5 Oil pressure switch, checking

—remove oil pressure switch and insert into tester
—connect tester into cylinder head in place of switch
—connect test wire **1** (blue) of tester to oil pressure switch and wire **3** from oil pressure switch

—connect test wire **2** (brown) to ground
—turn ignition **ON**, oil warning light must light (assuming bulb and wire are OK)
• if **NO**, switch is defective
—start engine and increase speed slowly. At oil pressure of 0.15-0.45 bar (2-6 psi) oil pressure warning light must go out
• if **NO**, switch is defective
—increase speed further. At 2000 rpm and oil temperature of 80 °C (176 °F) minimum oil pressure must be 2.0 bar (28 ft lb)

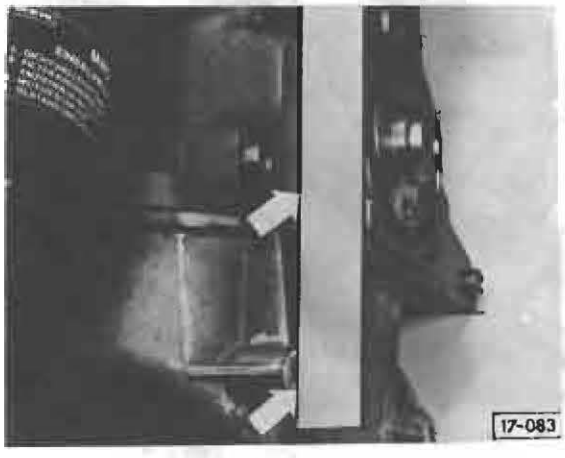

Fig. 6 Oil pan, installing
(engine installed)

—align oil pan to engine block with straightedge (arrows)
—tighten bolts

(engine removed)

—start all bolts including those in clutch housing
—press oil pan by hand against clutch housing so that there is no gap between oil pan and clutch housing
—lightly tighten all bolts
—fully tighten all bolts
M6 to 10 Nm (7 ft lb)
M10 to 45 Nm (33 ft lb)

CAUTION

Oil pan must be flush with end face of engine block. If it protrudes or there is a gap, clutch housing will be stressed and could break

Note

Always replace all gaskets and sealing rings.

Note

If, as a result of engine damage, large quantities of metal shavings are found in the engine oil, oil passages should be cleaned and cooler replaced.

Engine oil filter capacity
with oil filter change - 4.5 Ltr. (4.7 US qt.)
without oil filter change - 4.0 Ltr. (4.2 US qt.)

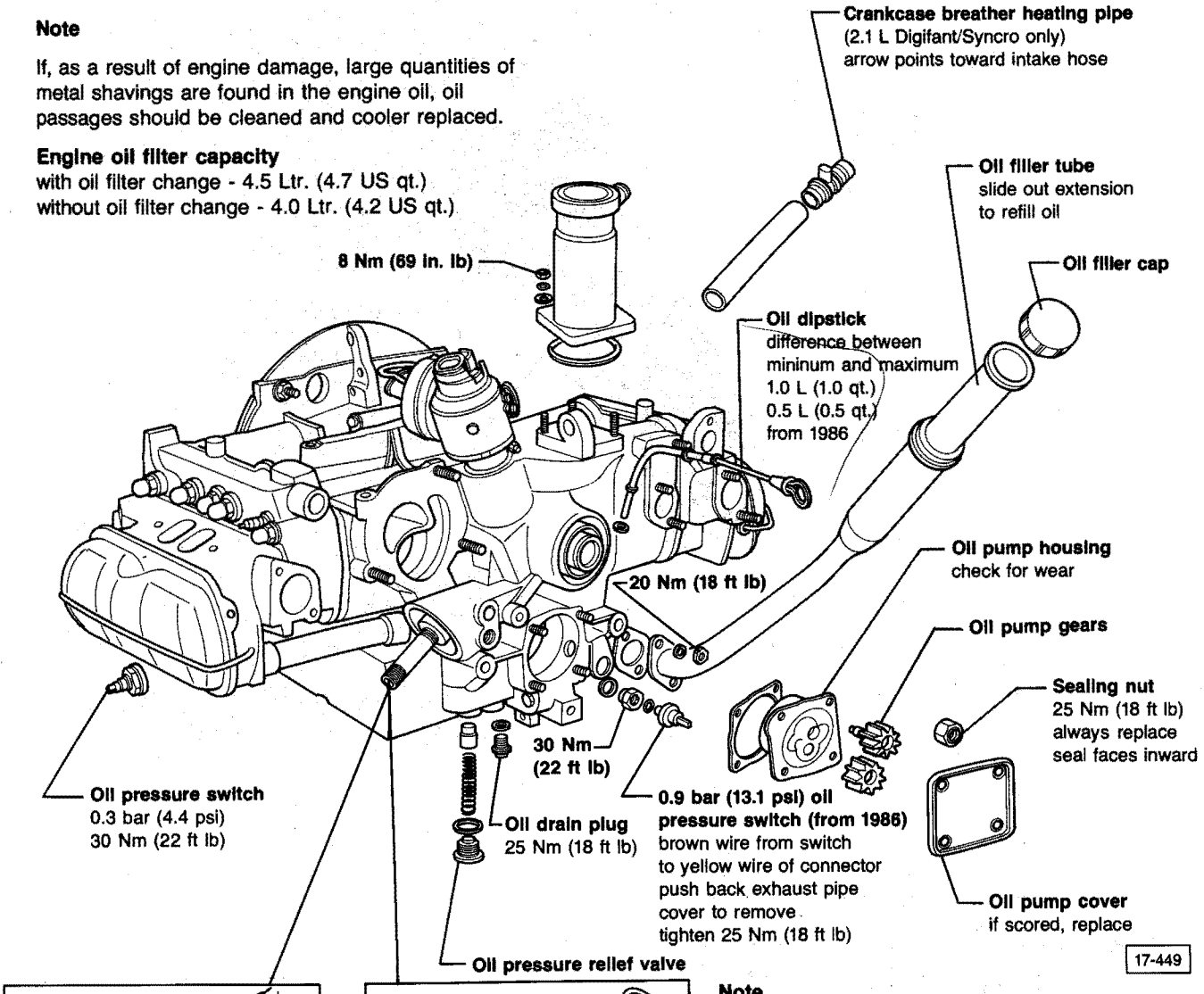

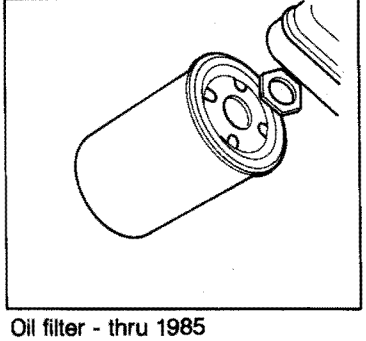

Oil filter - thru 1985

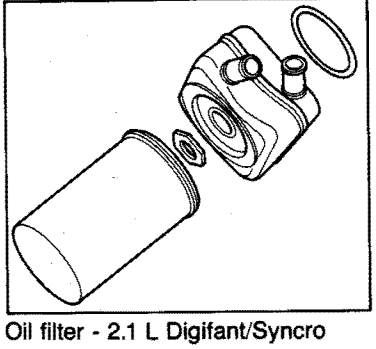

Oil filter - 2.1 L Digifant/Syncro from 1986. See pg. 17.8.

Note

Observe installation instructions on filter.

Note

Extreme cold weather can harden and split the seal between the engine block and the oil cooler thus creating an oil leak.

An improved cold-resistant seal was installed in production as of 02/87.

The new seal can be identified by its silver-grey appearance and is available through your parts deparment, part no. **N 901 814.02.**

CAUTION

Part numbers are for reference only. Always check with your Parts Department for latest information.

Oil cooler - from 1986

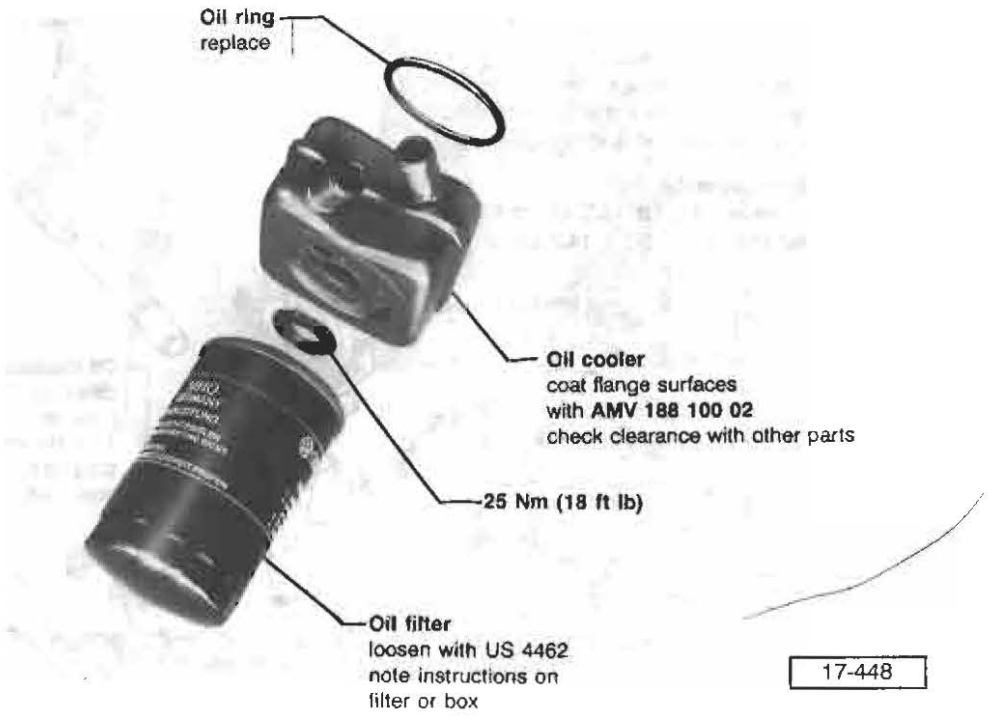

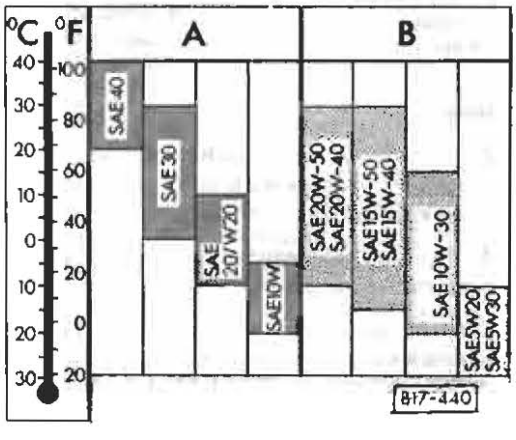

Oil viscosity grades

A - single weight oils
B - Multigrade oils

Only use oils marked 'SF' under API system.



Fig. 1 Oil pump housing, removing



Fig. 2 Oil pump end play, checking

- max. 0.1 mm (0.004 in.)

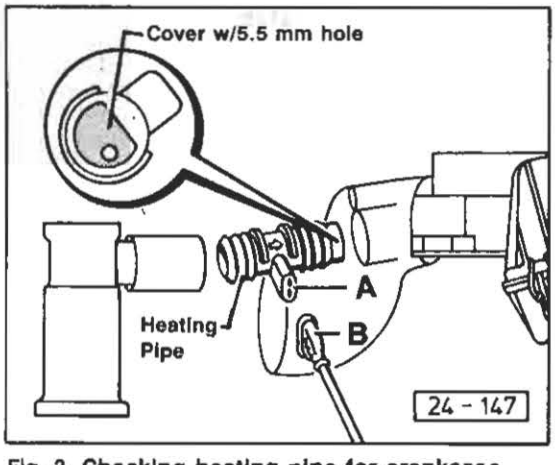

Fig. 3 Checking heating pipe for crankcase breather

A = resistance 4-17 ohms @ 25°C (77°F)
B = approx. 12V, with ignition **on**

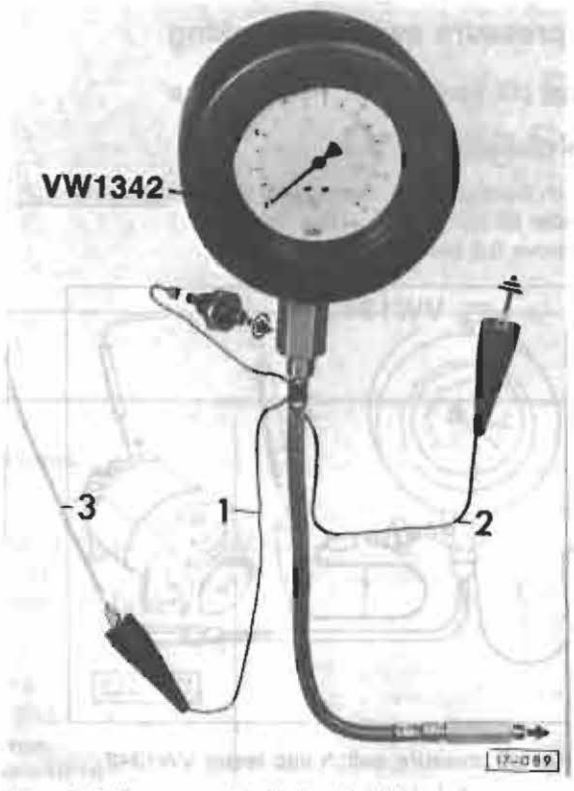

Fig. 4 Oil pressure/switch, checking

- engine oil temperature should be 80 °C (176 °F)

— remove oil pressure switch and install in gauge
— install oil pressure gauge/adapter in place of oil pressure switch

— connect wire 1 (blue) of gauge to oil pressure switch and wire of oil pressure warning light 3 as shown
— connect wire 2 (brown) to ground
— turn ignition ON
- oil pressure warning light must light up

- if **NO**, switch is defective, replace switch

— start engine
- oil pressure warning light must go out at an oil pressure of 0.15–0.45 bar (2–6.5 psi)

— increase engine speed
- at 2000 rpm, pressure should be minimum 2.0 bar (29 psi)

Oil pressure switch, checking

0.9 bar (13.1 psi) switch, near oil pump

Work procedure

— push back exhaust cover plate (mounting screw under oil pump) with screw driver
— remove 0.9 bar (13.1 psi)

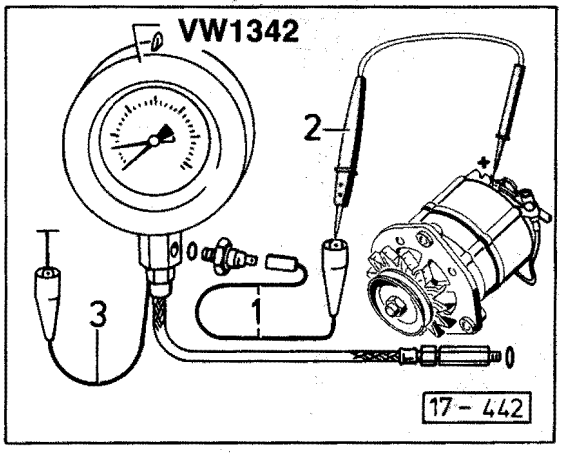

— screw oil pressure switch into tester VW1342
— connect wire **1** (blue)
— screw tester into crankcase in place of oil pressure switch
— connect test lamp **2** to wire **1** and alternator positive connection

— ground wire **3** (brown)
— start engine, slowly raise RPM
— at tester reading 0.75-1.05 bar (10.9-14.8 psi) test lamp must **light up**
• replace oil pressure switch if tester does **not** light

Note

As necessary, check switching point of oil pressure switch at starting RPM

0.3 bar (4.4 psi) oil pressure switch

Note

Tester connections are identical to 0.9 (13.1 psi) switch

0.3 bar (4.4 psi) oil pressure switch located between left side push rod tubes

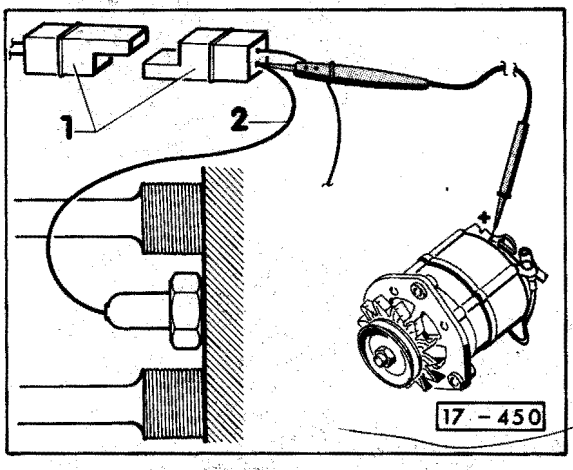

— disconnect connector **1**
— connect test lamp to wire **2** of 0.3 bar (4.4 psi) oil pressure switch and to alternator positive
— test lamp **must** light up
— start engine, raise RPM

When pressure goes to 0.15-0.45 bar (2.2-6.5 psi) test lamp must go **out.**

If not, replace oil pressure switch

— raise RPM
— at oil temperature of 80°C (176°F) and RPM of 2000, oil pressure should be 2.0 bar (29 psi)

Engine Cooling System

Index

Air-cooled
— Cooling air control flap
adjusting 19.3
— Cooling fan
removing 19.3
— Fan housing
assembly 19.2
removing 19.3
— Snap-lock wiring connectors
installing 19.19
— Thermostat
checking 19.3
— V-belt
assembly 19.2
tension, adjusting 19.3

Diesel
— Antifreeze hydrometer
checking 19.7
— Coolant
assembly 19.4
draining/filling 19.6
mixture ratio 19.5
pipes, replacing 19.7a
— Snap-lock wiring connectors
installing 19.19
— Pressure Cap
checking 19.7

Water-cooled
— Antifreeze hydrometer
checking 19.17
— Coolant
assembly 19.8, 19.11, 19.14
draining/filling 19.15
expansion tank, checking 19.18
hose layout 19.10
leak checks 19.17
mixture ratio 19.18
refill tank 19.9, 19.13
— Hose spring clamps
removing/installing 19.16
— Hot footwell kit
installing 19.20
— Radiator
assembly 19.12
thermo-switch 19.12

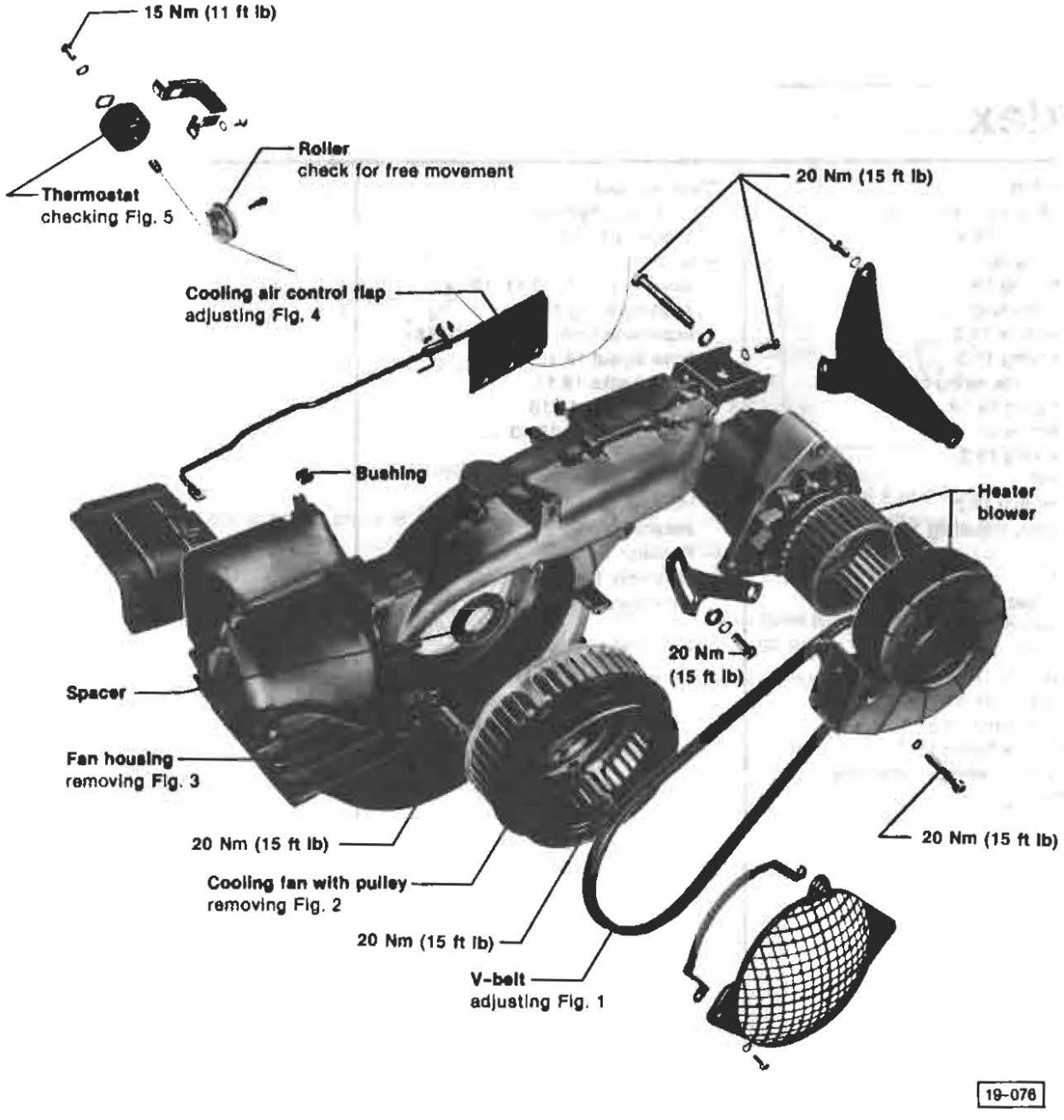
15 Nm (11 ft lb)
Roller
check for free movement
Thermostat
checking Fig. 5
20 Nm (15 ft lb)
Cooling air control flap
adjusting Fig. 4
Bushing
Heater
blower
20 Nm
(15 ft lb)
Spacer
Fan housing
removing Fig. 3
20 Nm (15 ft lb)
20 Nm (15 ft lb)
Cooling fan with pulley
removing Fig. 2
20 Nm (15 ft lb)
V-belt
adjusting Fig. 1
19-076

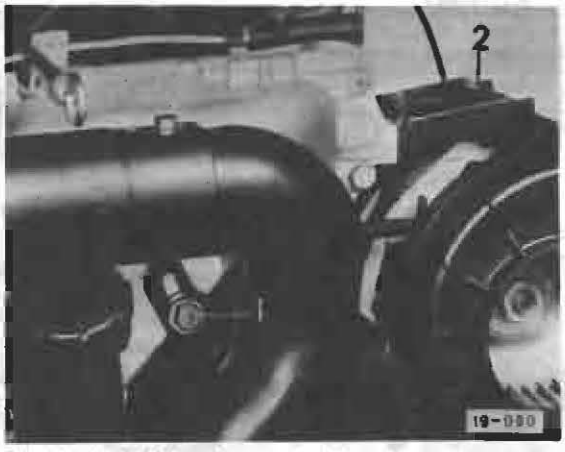

Fig. 1 V-belt tension, adjusting

— loosen bolts **1** and **2**
— move alternator to tension belt
• belt deflection must be 10–15mm (3/8–9/16 in.) in middle when pressing firmly with thumb
— tighten bolts

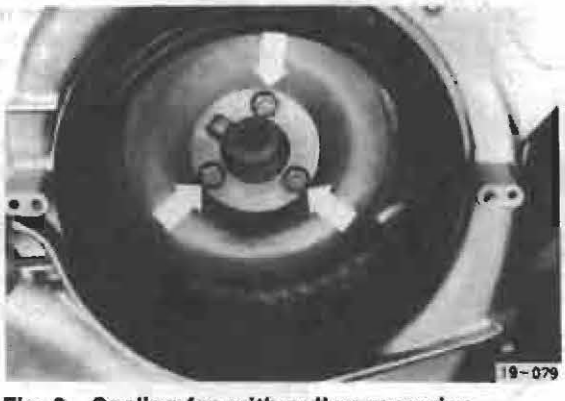

Fig. 2 Cooling fan with pulley, removing

— remove bolts (arrows)

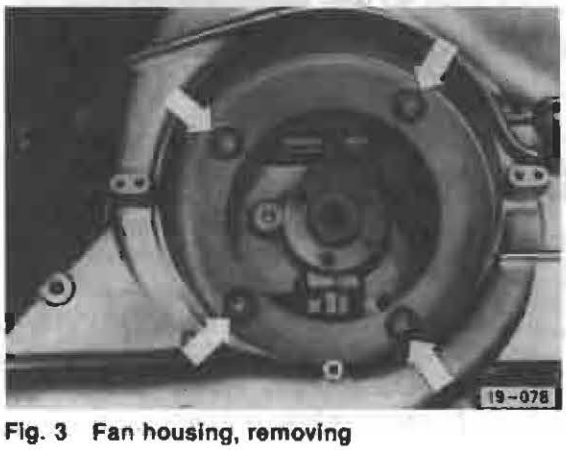

Fig. 3 Fan housing, removing

— disconnect cooling air control flap cable
— remove bolts (arrows)
— remove housing

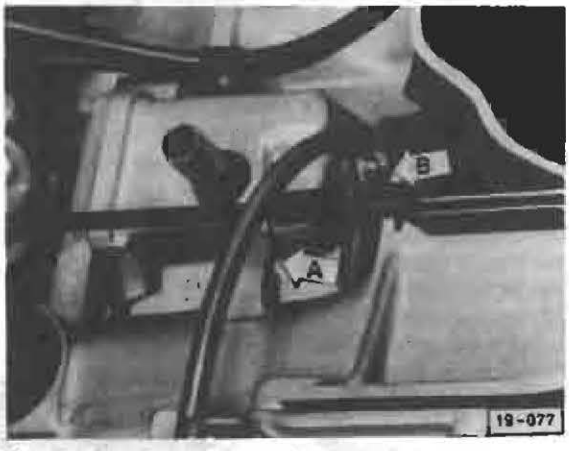

Fig. 4 Cooling air control flap, adjusting

— press flaps to fully closed position and tighten cable clamp

Note

Bent ends of return spring must rest on boss of housing (arrow **A**) and on cable guide (arrow **B**)

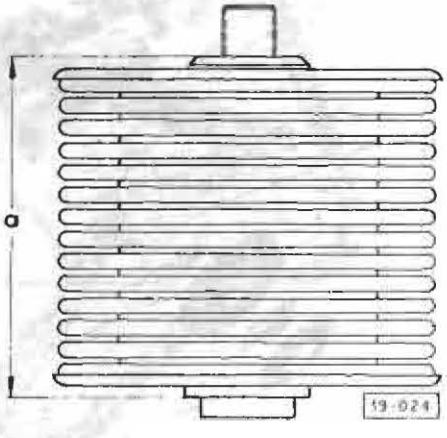

Fig. 5 Thermostat, checking

— put thermostat in water 85–90 °C (185–194 °F)
• **a** = min. 46 mm (1 13/16 in.)

Note

The cooling systems of **all** Volkswagen vehicles are filled at the factory with a mixture of water and an antifreeze solution (G 11) with corrosion inhibitors. This coolant mixture should be used year-round.

Phosphate-free anti-freeze prevents frost and corrosion damage, the formation of chalk and in addition, it raises the boiling point of water. Due to the higher boiling point the coolant is an aid to operational efficiency, when the engine is operating under full load, particularly in tropical climates.

CAUTION

Antifreeze other than specified by Volkswagen may cause corrosion of the cooling system thus leading to engine overheating and damage.

Always use new gaskets when installing parts. Cooling system parts can be removed and installed with engine in vehicle.

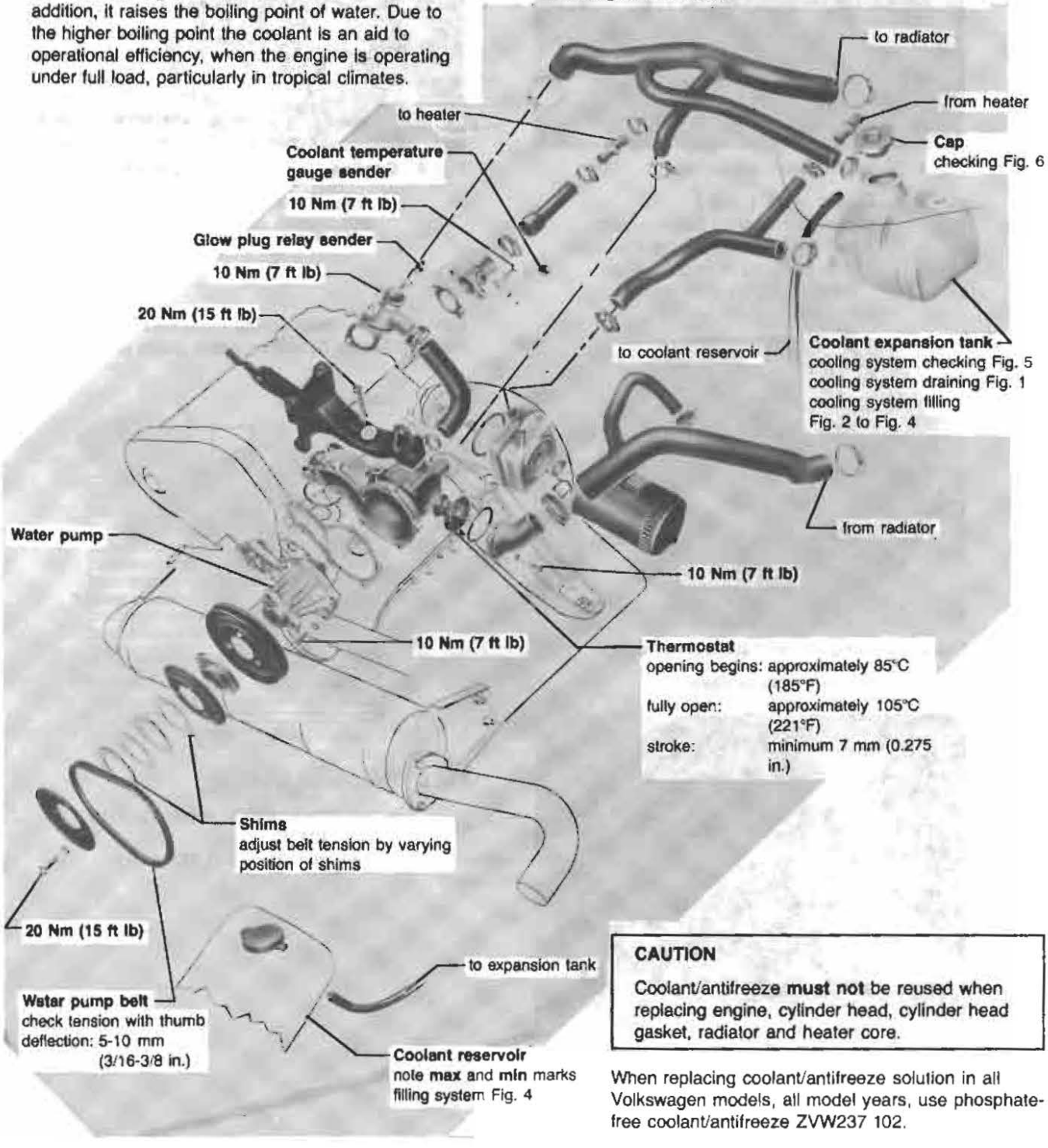

CAUTION

Coolant/antifreeze **must not** be reused when replacing engine, cylinder head, cylinder head gasket, radiator and heater core.

When replacing coolant/antifreeze solution in all Volkswagen models, all model years, use phosphate-free coolant/antifreeze ZVW237 102.

Coolant mixture ratio

Coolant capacity 16.0 ltr (16.9 US qt)

Outside Temperature	Antifreeze	Water
– 25 °C (– 13 °F)	6.4 ltr (6.75 US qt)	9.6 ltr (10.15 US qt)
– 35 °C (– 30 °F)	8.0 ltr (8.45 US qt)	8.0 ltr (8.45 US qt)

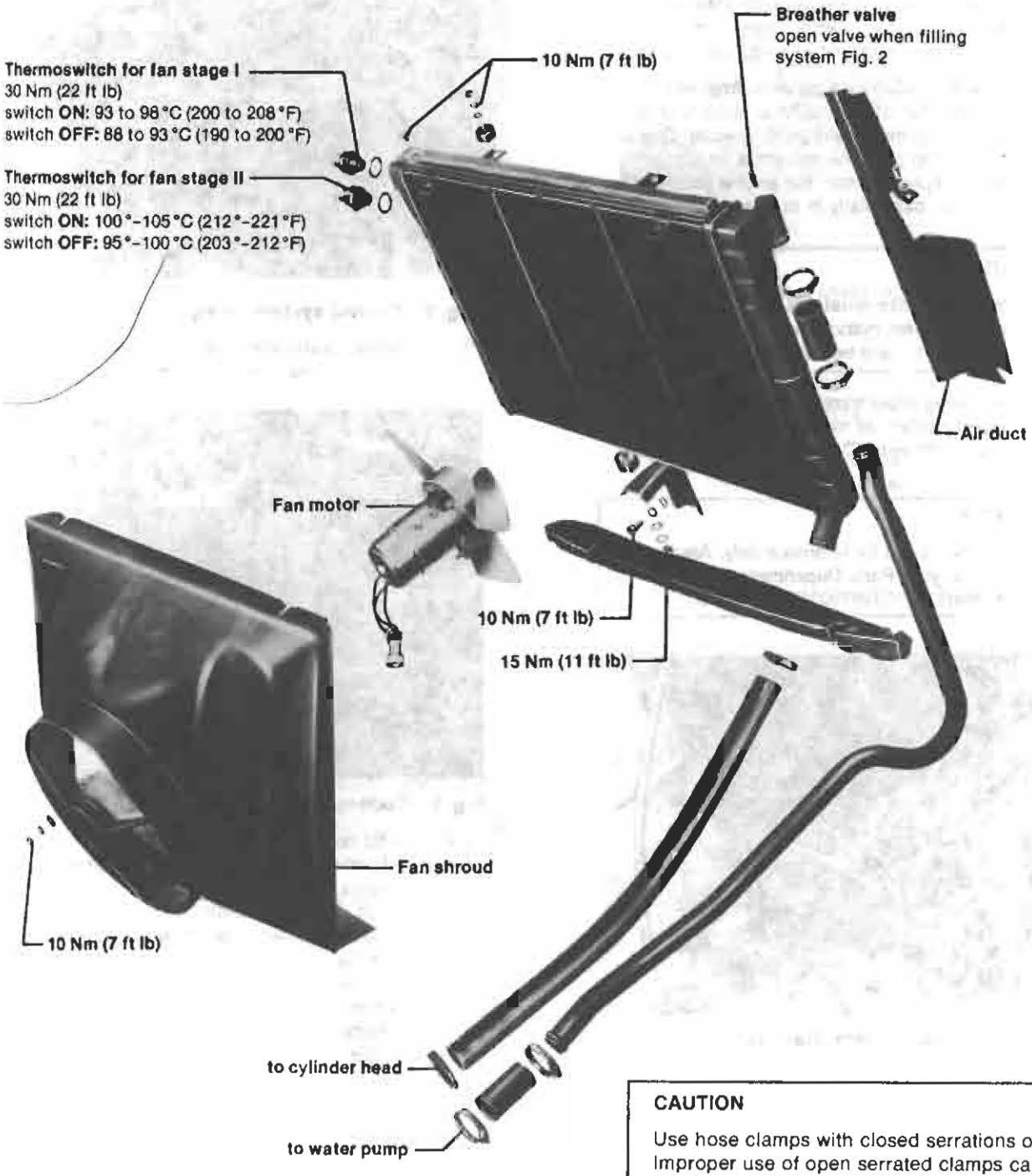

CAUTION

Use hose clamps with closed serrations only. Improper use of open serrated clamps can tear hose and cause coolant leaks.

CAUTION

Coolant/antifreeze **must not** be reused when replacing engine, cylinder head, cylinder head gasket, radiator and heater core.

19-215

Cooling system, draining/filling

The cooling systems of **all** Volkswagen vehicles are filled at the factory with a mixture of water and an antifreeze solution (G 11) with corrosion inhibitors. This coolant mixture should be used year-round.

Phosphate-free anti-freeze prevents frost and corrosion damage, the formation of chalk and in addition, it raises the boiling point of water. Due to the higher boiling point the coolant is an aid to operational efficiency, when the engine is operating under full load, particularly in tropical climates.

CAUTION

Coolant/antifreeze **must not** be reused when replacing engine, cylinder head, cylinder head gasket, radiator and heater core.

When replacing coolant/antifreeze solution in all Volkswagen models, all model years, use phosphate-free coolant/antifreeze ZVW237 102.

CAUTION

Part numbers are for reference only. Always check with your Parts Department for latest information.

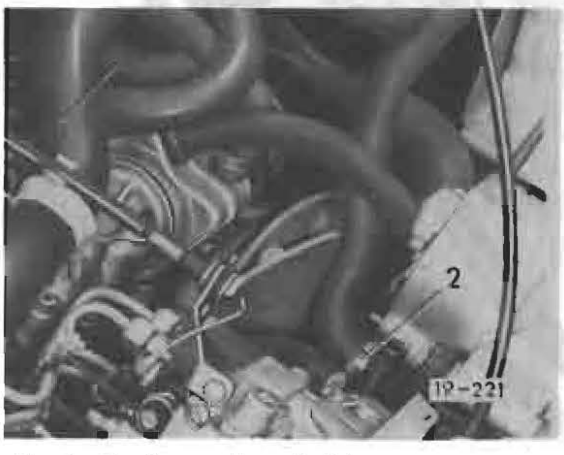

Fig. 1 Cooling system, draining

—fully open heater controls
—open cap on expansion tank
—disconnect lower coolant hose **1** from water pump at connection pipe
—disconnect center coolant hose **2** from water pump

Note

• save coolant for reuse (see caution)

When removing radiator, drain rest of coolant by detaching lower hose from radiator



Fig. 2 Cooling system, filling

—set heater controls to position **WARM**
—open breather valve (arrow) on radiator



Fig. 3 Cooling system, filling

—fill cooling system via expansion tank (arrow) until tank is filled to brim and remains filled
—run engine at about 2500 rpm until coolant flows at breather valve with **NO** bubbles
—close breather valve
—check coolant level and top up as necessary
—close expansion tank with cap



Fig. 4 **Cooling system, filling**

—fill reservoir up to mark **max** (arrow)



Fig. 5 **Cooling system, checking**

—attach tester **A** in place of pressure cap
- **A** = Stant tester ST-255A, AC-PCT-3 or equivalent

—apply pressure of approximately 1 bar (14 psi)
- if pressure remains constant, system is **OK**

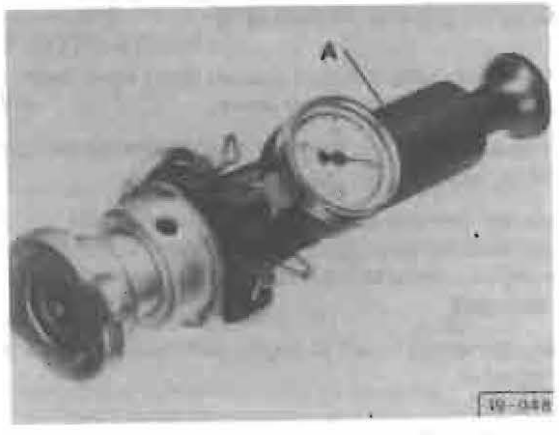

Fig. 6 **Pressure cap, checking**

—attach cap on tester **A**
- **A** = Stant tester ST-255A, AC-PCT-3 or equivalent

—apply a pressure of 0.9 to 1.15 bar (11 to 16 psi)
- if pressure relief valve opens within this range, cap is **OK**

Antifreeze hydrometer, checking

Calibration of hydrometer must be checked frequently to ensure accuracy.

— mix a 50/50 mixture of antifreeze and water together in a small container
— hydrometer should read −35°C (−30°F)
- if not, put a mark (paint dot) to indicate where −35°C (−30°F) should be.

Coolant pipes, replacing

Since March 1985 the steel coolant pipes have been replaced with plastic coolant pipes.

In cases of repair, the **original** steel coolant pipes must be replaced with the new plastic pipes.

Since the diameter of the plastic coolant pipes is larger than the steel pipes, the hose hole openings in the engine compartment and cross members must be enlarged.

Also, connecting hoses to engine and radiator must be replaced.

Parts required

> **CAUTION**
>
> Part numbers are for reference only. Always check with your Parts Department for latest information.

Description	Part number	Quantity
Plastic pipe (from cylinder head)	251 121 397G	1
Plastic pipe (to coolant pump)	251 121 399G	1
Engine hose (from cylinder head)	068 121 101H	1
Engine hose (to coolant pump)	068 121 073G	1
Radiator hose (from cylinder head)	251 121 082	1
Radiator hose (to coolant pump)	251 121 083H	1
Clamps	411 261 679	2
Worm drive hose clamps	obtain locally	2
Tie-wraps	obtain locally	X
Trim beading	obtain locally	X

— remove fuel tank
— remove steel coolant pipes
— pull back hoses for heater to engine from cross member

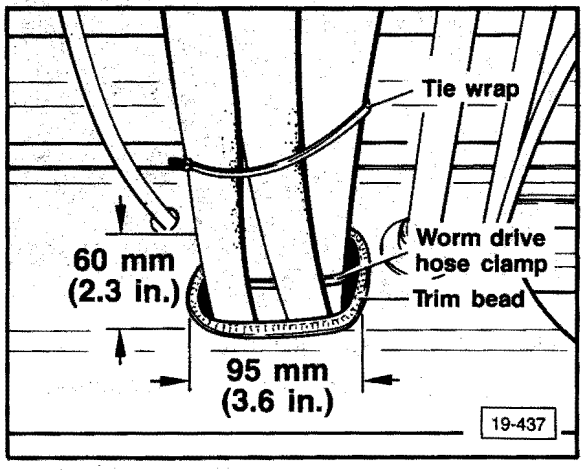

— rework holes for heater to engine in cross member (as shown)
— rework holes in cross member and engine compartment wall to side and downward
— cover sheet metal edges on cross member with trim bead

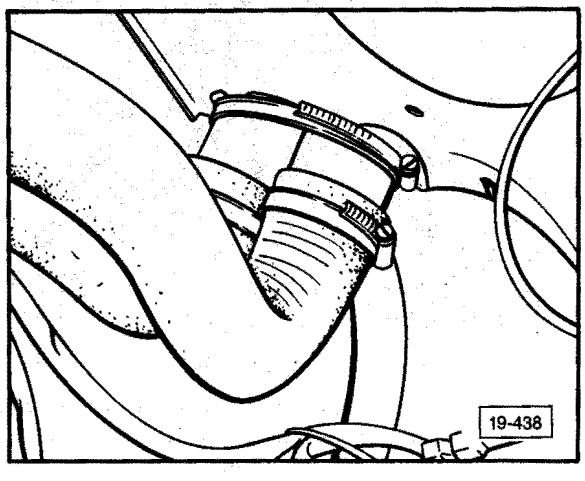

— push plastic pipes from engine side through cross member and fasten to attachment tabs on cross member and engine wall with a worm drive hose clamp (as shown)

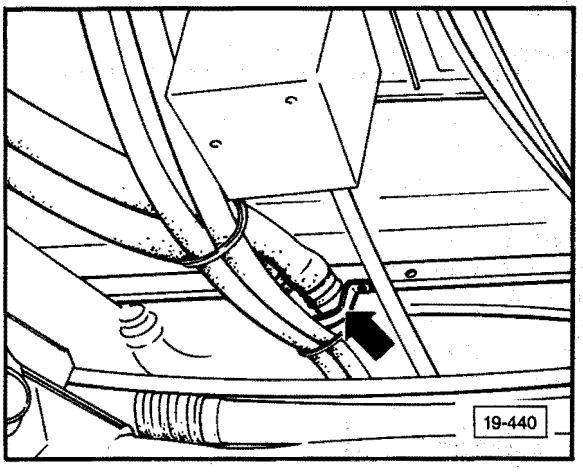

— bend and attach clamps Part No. **411 261 679** to shape and secure plastic pipes to cross member in front (**arrow**)

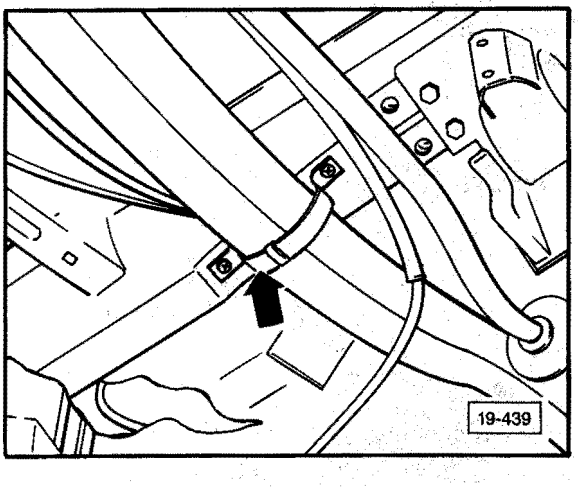

— attach clamp in back with self tapping screws (**arrow**)
— tie coolant water pipes and heater hoses together with tie wraps (see illustration 19-437 at 30 cm (approximately 12 in.) intervals

Installing new coolant water hoses – to engine/radiator

Note

Vehicles up to 8/82

— shorten hose Part No. **251 121 083H** for return flow from the radiator to coolant pump to fit
*note the different hose diameters of 32 mm (1-1/4 in.) and 38 mm (1-31/64 in.)

Vehicles from VIN 24C 017 500 (approximately 12/82)

— connecting sleeve diameter for hose Part No. **068 121 101H** on expansion tank was increased from 20 mm (25/32 in.) to 32 mm (1-1/4 in.)

Proceed as follows when installing connecting hose Part No. **068 121 101H** to vehicles with 20 mm (25/32 in.) connecting sleeve on the expansion tank:

— cut off original coolant hose (with 20 mm sleeve) approximately 120 mm (4-11/16 in.) from expansion tank
— install new coolant water hose, and shorten connecting sleeve to expansion tank to match length of original part
— connect both ends of hose with aid of piece of pipe (made locally) of 20 mm (25/32 in.) diameter
— secure with clamps

Cooling system
draining Fig.1 to Fig. 4
checking for leaks Fig. 9

Note

Always replace all gaskets. All parts of cooling system can be removed and installed with engine installed.

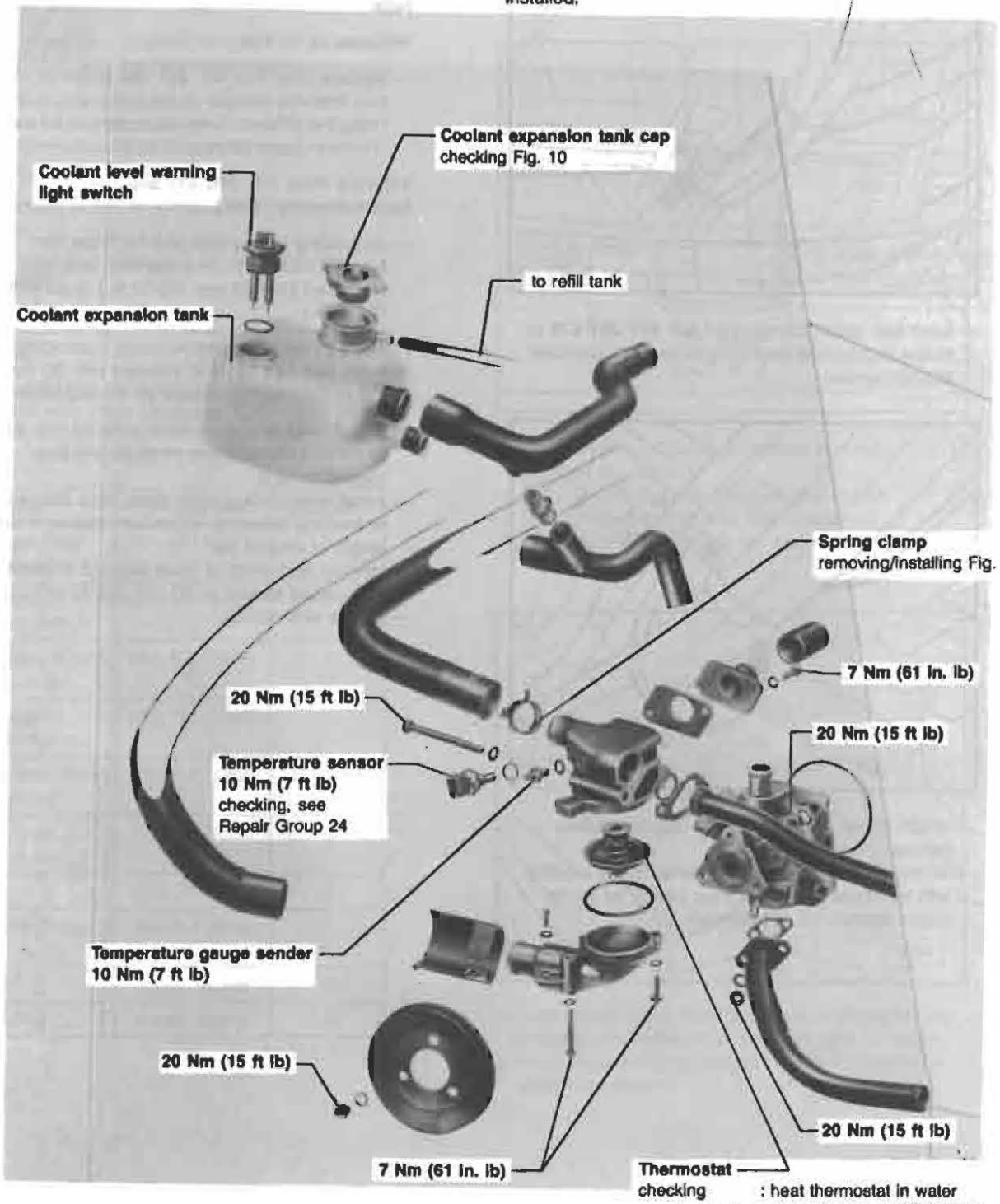

CAUTION

Coolant/antifreeze **must not** be reused when replacing engine, cylinder head, cylinder head gasket, radiator and heater core.

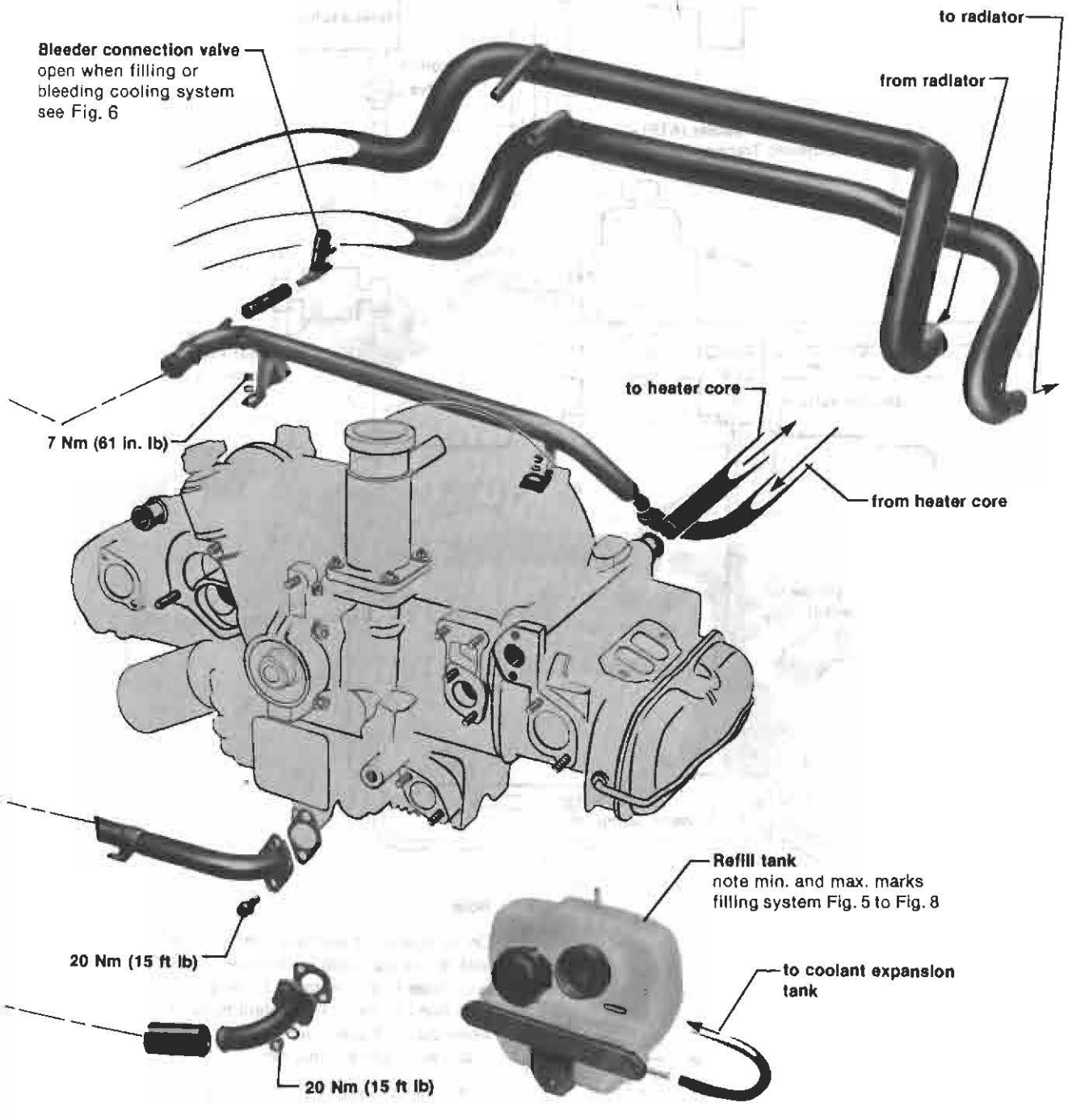

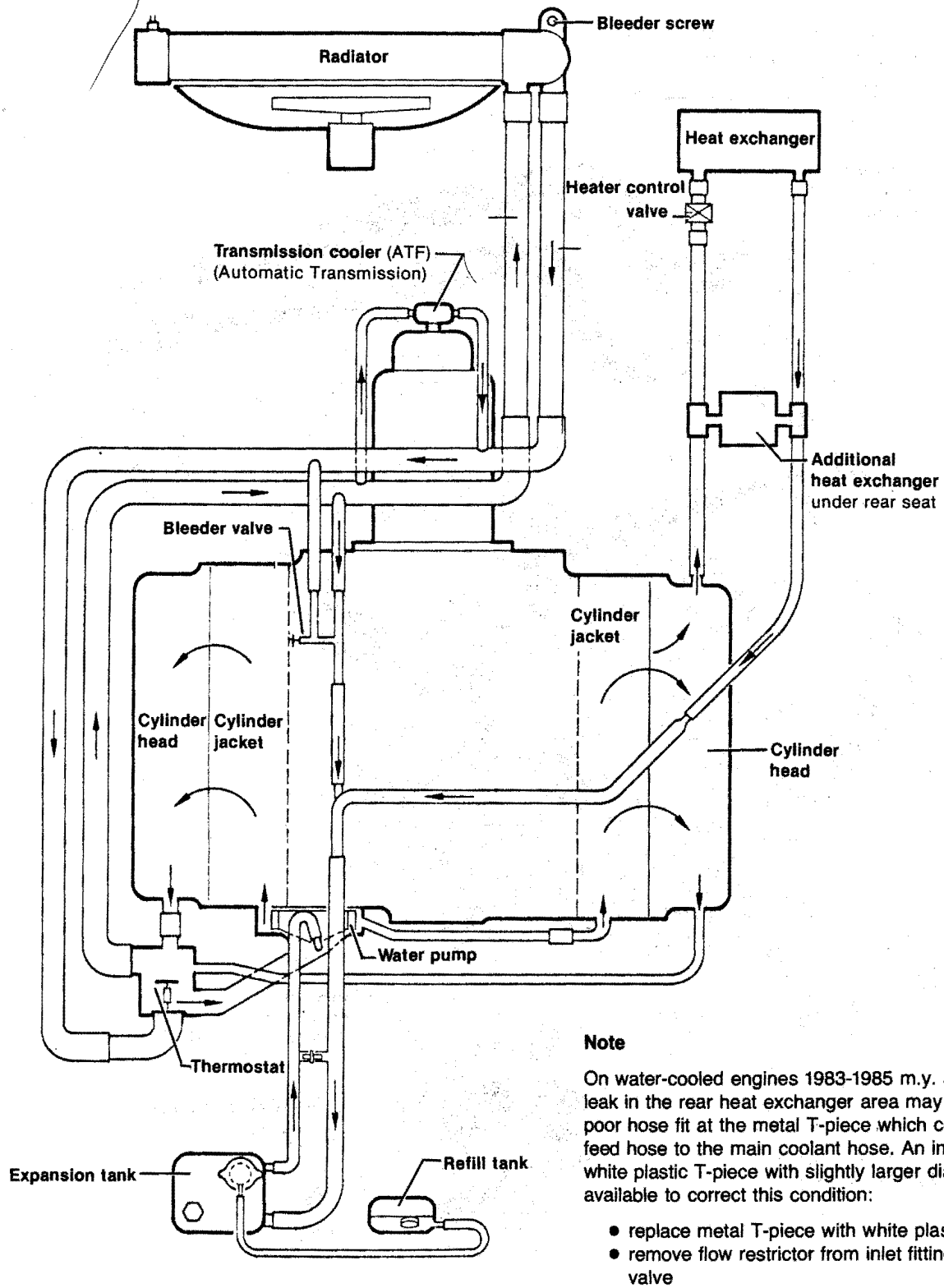

Note

On water-cooled engines 1983-1985 m.y. a coolant leak in the rear heat exchanger area may be due to poor hose fit at the metal T-piece which connects the feed hose to the main coolant hose. An improved, white plastic T-piece with slightly larger diameter is available to correct this condition:

- replace metal T-piece with white plastic version
- remove flow restrictor from inlet fitting of heater valve

19-276

CAUTION

Coolant/antifreeze **must not** be reused when replacing engine, cylinder head, cylinder head gasket, radiator and heater core.

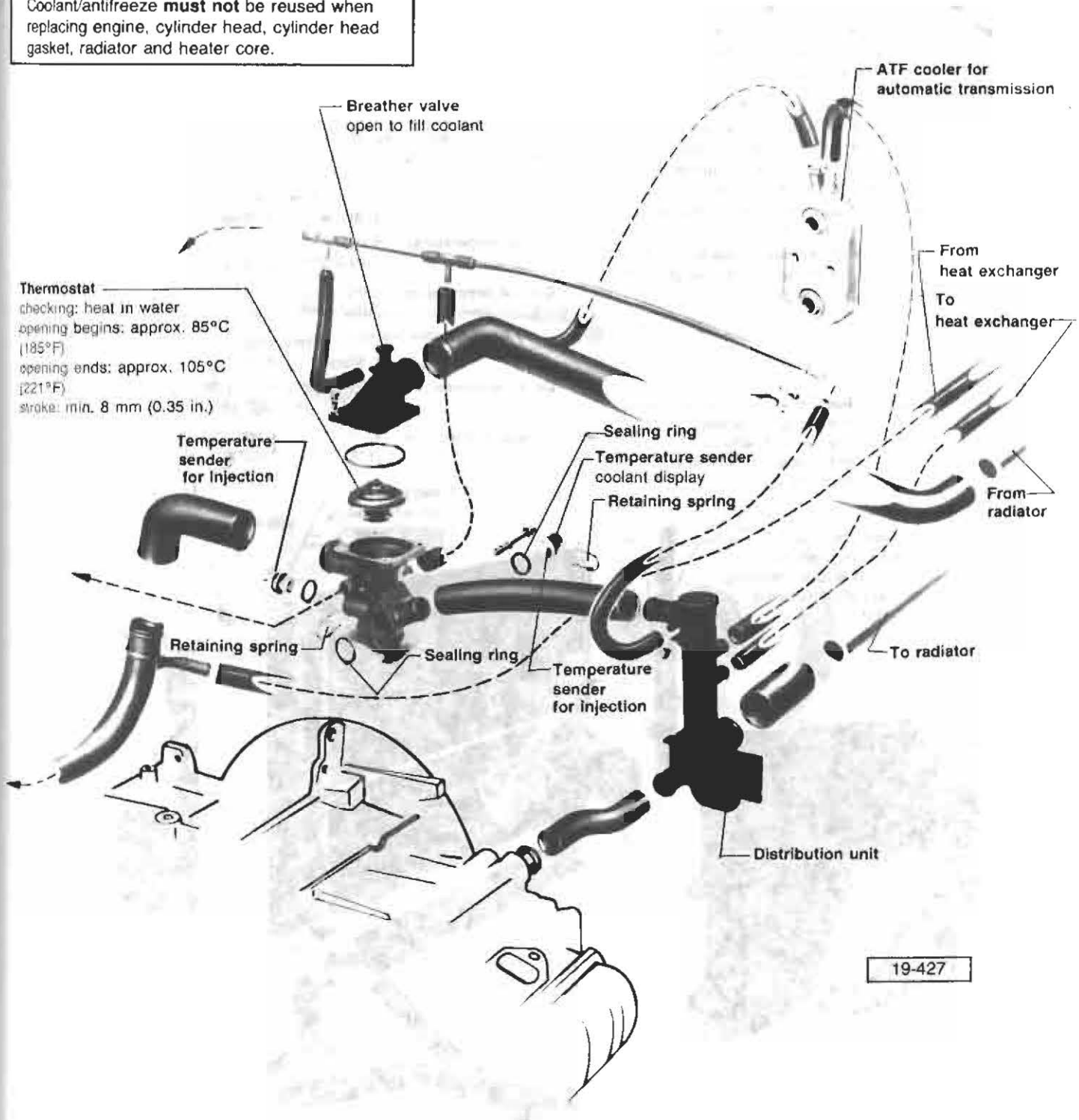

Note

The cooling systems of **all** Volkswagen vehicles are filled at the factory with a mixture of water and an antifreeze solution (G 11) with corrosion inhibitors. This coolant mixture should be used year-round.

Phosphate-free anti-freeze prevents frost and corrosion damage, the formation of chalk and in addition, it raises the boiling point of water. Due to the higher boiling point the coolant is an aid to operational efficiency, when the engine is operating under full load, particularly in tropical climates.

When replacing coolant/antifreeze solution in all Volkswagen models, all model years, use phosphate-free coolant/antifreeze ZVW237 102.

CAUTION

Coolant/antifreeze **must not** be reused when replacing engine, cylinder head, cylinder head gasket, radiator and heater core.

Thermo-switch for fan
(located at left on radiator)
removing/installing: remove radiator grille and move left cardboard air deflector to side

	Thru 1985	
	I. Stage	**II. Stage**
Cut-in temperature:	93°C-98°C (199-208°F)	99°C-105°C (210°-221°F)
Cut-out temperature:	88°C-93°C (190-199°F)	91°C-97°C (196-206°F)

	From 1986	
	I. Stage	**II. Stage**
Cut-in temperature:	89°C-94°C (192°-201°F)	95°C-100°C (203-212°F)
Cut-out temperature:	81°C (178°F)	87°C (189°F)

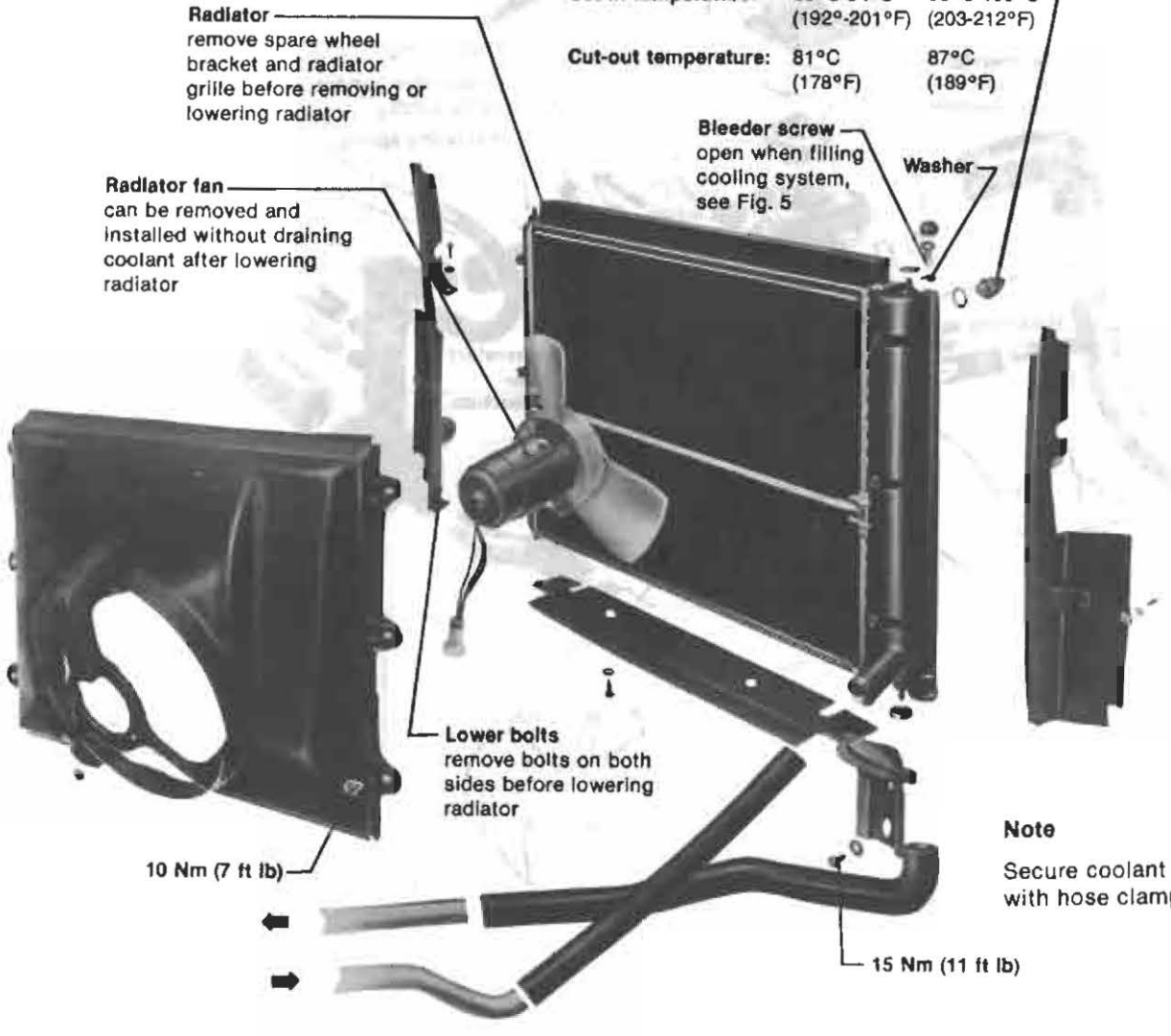

Note

Secure coolant hoses with hose clamps

19-254

Note

Always replace all gaskets. All parts of cooling system can be removed and installed with engine installed in vehicle.

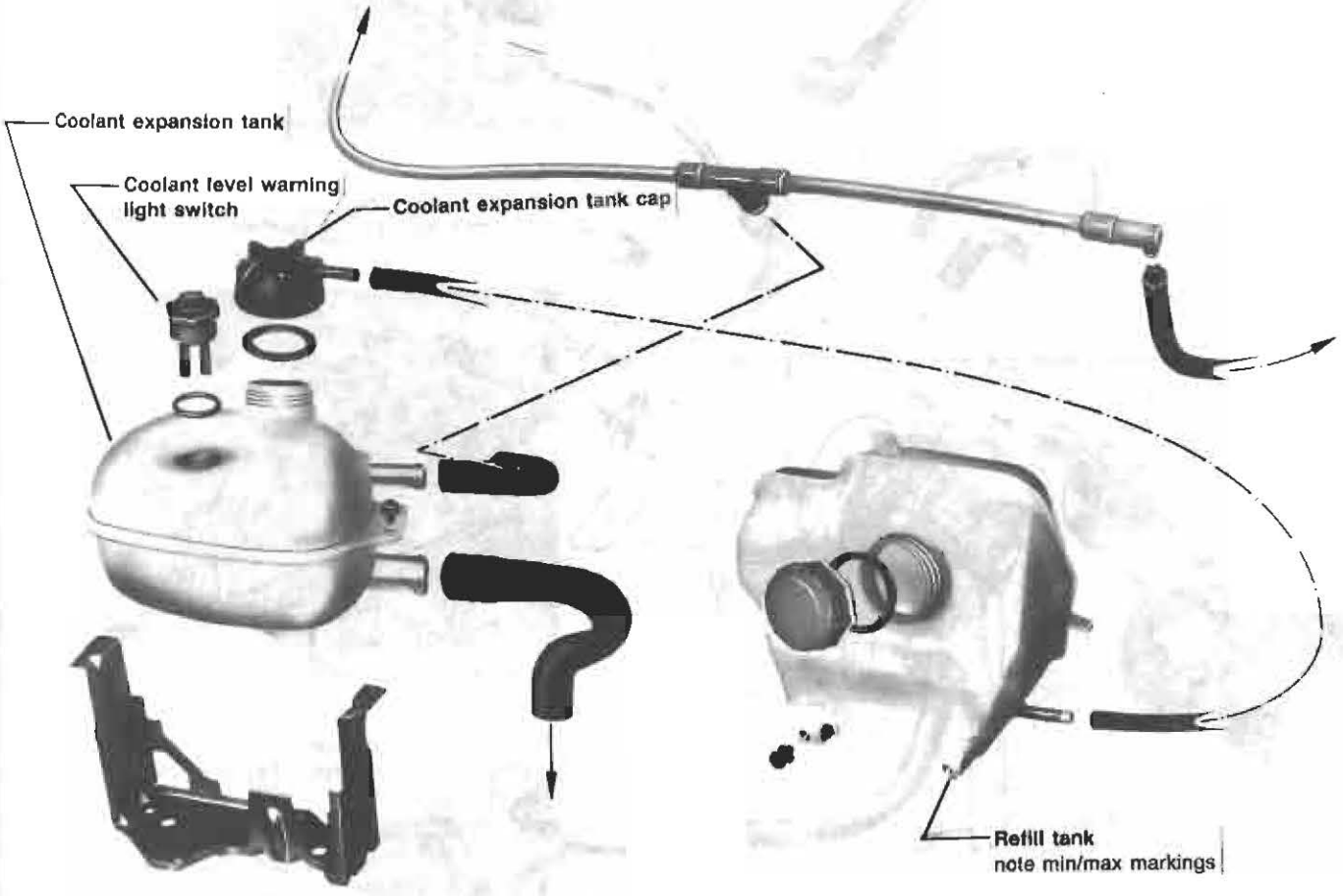

19-410

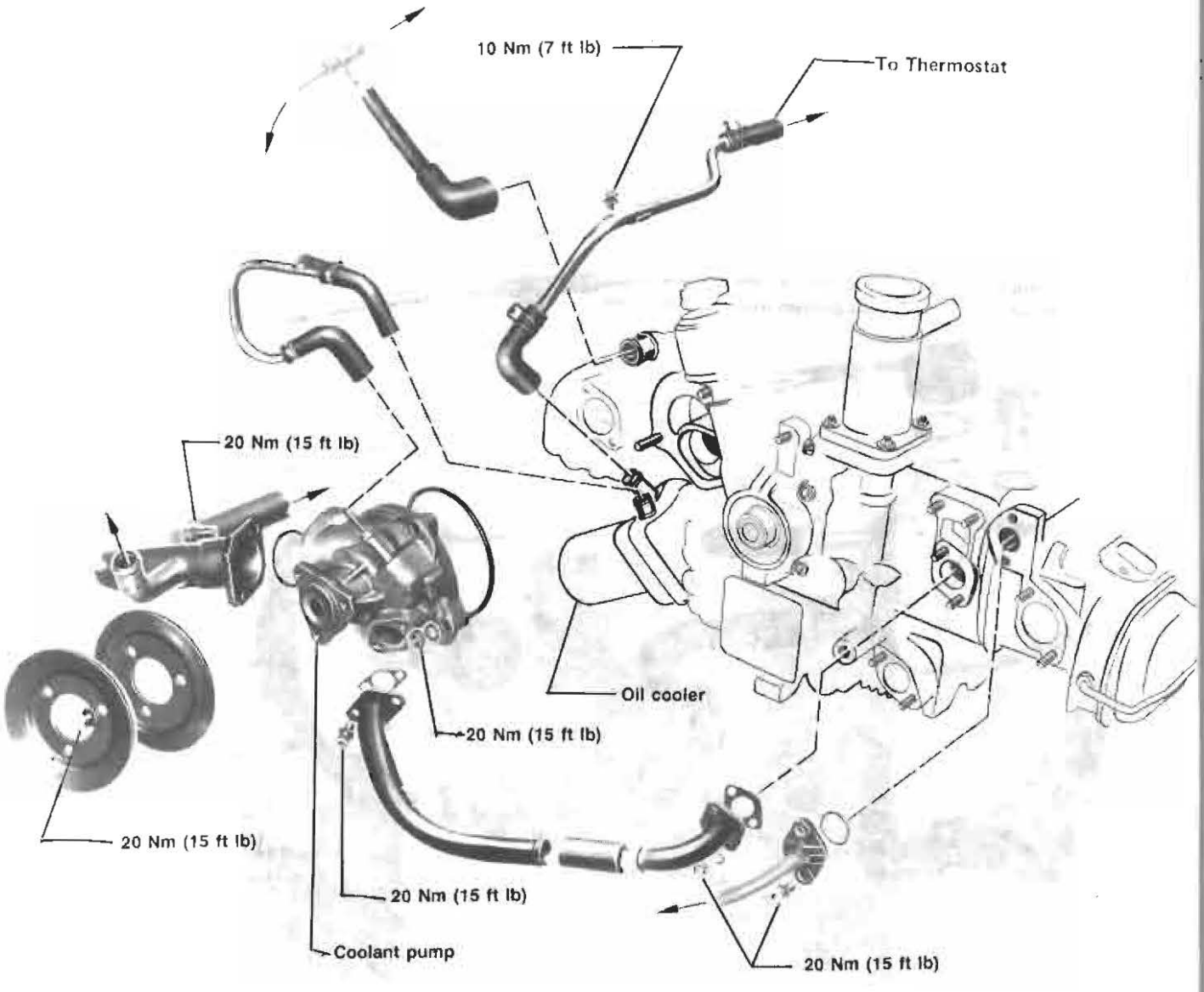

Water-cooled from 1986



Fig. 1 **Coolant system, draining**

— open coolant expansion tank cap
— drain coolant at drain plugs **1** on cylinder heads



Fig. 2 **Coolant system, draining (when removing engine**

— pinch coolant hoses with hose clamp (A-local supply) (arrows) before removing

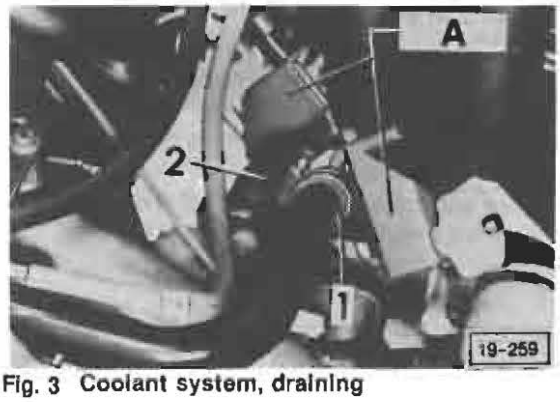

Fig. 3 **Coolant system, draining**

— in case that coolant hoses **1** and **2** for heat exchanger have to be removed, pinch hoses with hose clamp (A-local supply)

Draining - From 1986

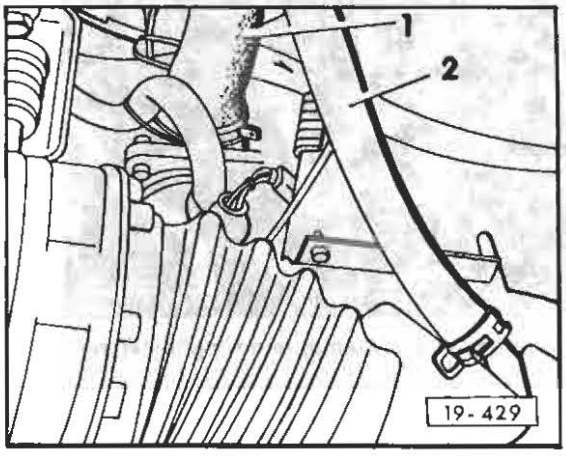

— close hose **1** from radiator to thermostat with hose clamp
— close hose **2** from heat exchanger to coolant pipe with hose clamp

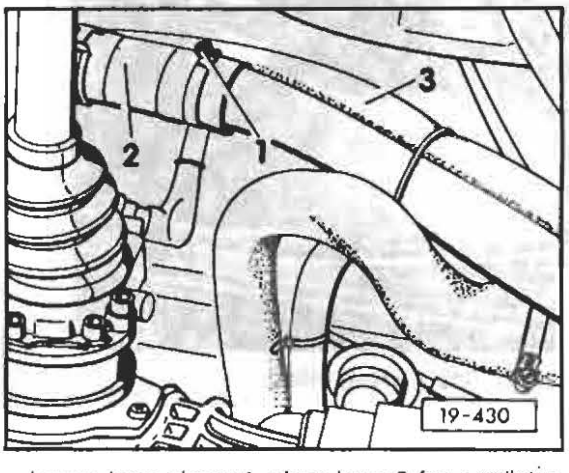

— loosen hose clamp **1**, close hose **2** from radiator to distribution piece with hose clamp
— close hose **3** from heat exchanger to distribution piece with hose clamp
— drain coolant at drain plugs (Fig. 1)
• save coolant for **reuse** (see caution)
— open coolant expansion tank cap

CAUTION

Coolant/antifreeze **must not** be reused when replacing engine, cylinder head, cylinder head gasket, radiator and heater core.



Fig. 4 Hose spring clamp, removing/installing

— use universal pliers or hose clamp pliers to remove or install clamp (arrow)

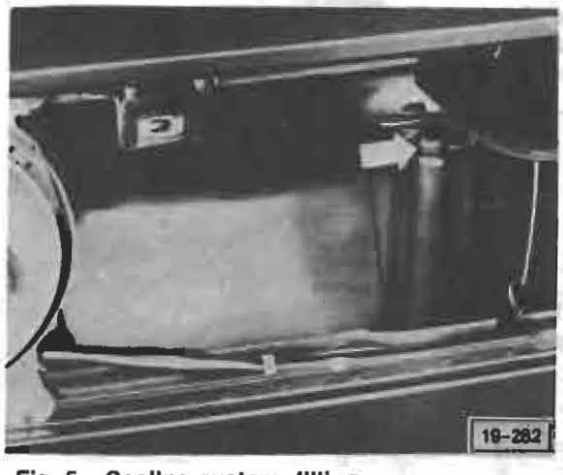

Fig. 5 Cooling system, filling

— set heater control to maximum heating
— open control valve for auxiliary heater under rear seat
— remove radiator grille
— raise vehicle approx. 10 cm (4 in.) at front under cross-member with floor jack and wooden support or equivalent
— open bleeder screw (arrow) on radiator
— have up to two gallons of pre-mixed coolant on hand



Fig. 6 Cooling system, filling

— open bleeder valve in engine compartment
A = open
B = closed

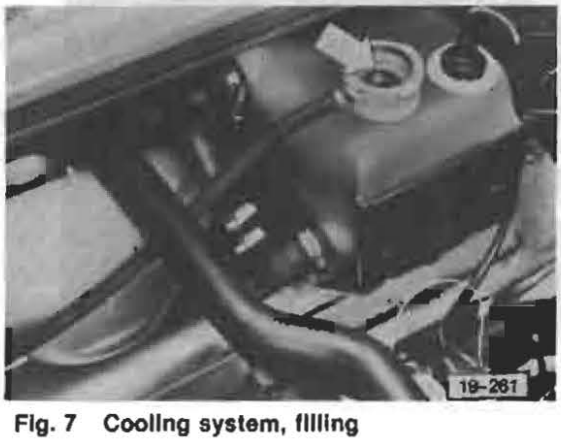

Fig. 7 Cooling system, filling

— fill coolant until expansion tank is full (approx. 4-5 litres/4.25-5.3 US qt)
— start engine
— at approx. 2000 rpm, top up tank untill coolant flows from bleeder screw on radiator (bubble free), maintain 2000 rpm
— close bleeder screw on top of radiator when coolant flows out
— add coolant until tank is full and close tank with cap, allow engine to idle
— turn engine off and lower vehicle

— additional coolant may need to be added to the expansion tank to top off

WARNING —

- *Hot coolant can scald. Do not remove expansion tank cap unless engine is cold.*
- *Engine must also be running at approx. 2000 rpm before removing coolant expansion tank cap to prevent loss of coolant.*



Fig. 8 Cooling system, filling

— fill refill tank up to max. mark (arrow)

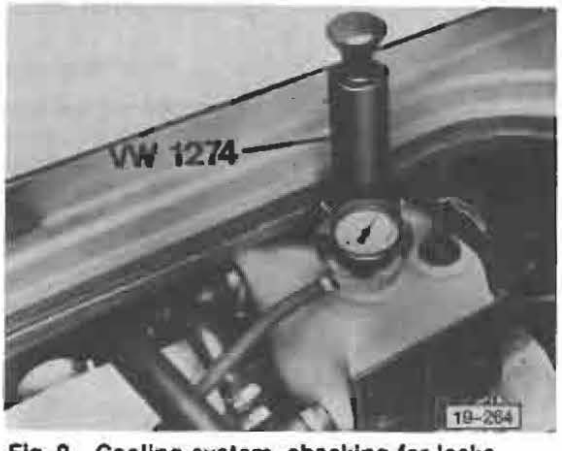

Fig. 9 Cooling system, checking for leaks

— attach tester in place of pressure cap
- Stant tester St-255 A, AC-PCT3 or equivalent

— apply pressure of approx. 1 bar (14.5 psi)
- if pressure remains constant, system is **OK**
- if pressure drops, look for leaks and eliminate

Antifreeze hydrometer, checking

Calibration of hydrometer must be checked frequently to ensure accuracy.

— mix a 50/50 mixture of antifreeze and water together in a small container
— hydrometer should read −35°C (−30°F)
- if not, put a mark (paint dot) to indicate where −35°C (−30°F) should be.

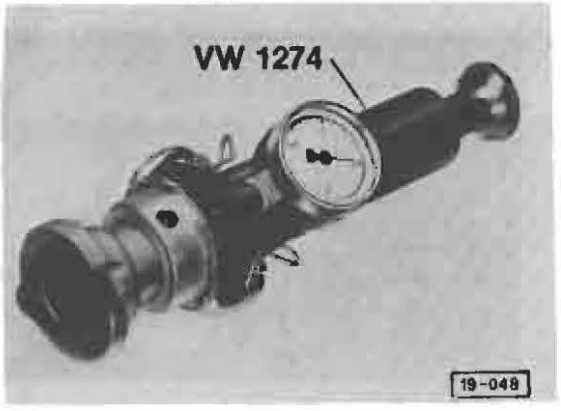

Fig. 10 Expansion tank cap, checking

— attach cap on tester
- Stant tester ST-255 A, AC-PCT-3 or equivalent

— apply pressure of 0.9 to 1.15 bar (13–17 psi)
- if pressure relief valve opens within this range, cap is **OK**

Note

Cap has 3 important functions:
1. it opens at pressure of 0.9–1.15 bar (13–17 psi) allowing flow to expansion tank
2. it opens at a vacuum of 0.02–0.1 bar (0.3–1.45 psi) allowing flow **from** expansion tank
3. it seals radiator neck

Only item 1 can be checked with tester.
If it is suspected that items 2 and 3 are not in order, replace cap

Coolant mixture ratio
- **coolant capacity 17.5 ltr (18.4 US qt)**

Note

Cooling system is filled at factory with mixture of water and antifreeze/corrosion protective solution.
Coolant mixture should be used all year.
When replacing coolant only use ethylene glycol based antifreeze (phosphate-free).
Due to higher boiling point, coolant is an aid to operating on full load, particularly in warm climates

Outside Temperature	Antifreeze	Water
– 25 °C (– 13 °F)	7.0 ltr (7.4 US qt)	10.5 ltr (11 US qt)
– 35 °C (– 30 °F)	8.75 ltr (9.2 US qt)	8.75 ltr (9.2 US qt)

Snap-lock connectors, installing

Starting Jan. 1986, the electrical connection on replacement radiator cooling fan motors is now a snap-lock connector.
When replacing a fan motor also replace the connector on the wiring harness.

This snap-lock connector was introduced on Vanagon as a running change during Jan. 1986 production.

Note

This work procedure will be applicable when all existing stocks of replacement radiator cooling fan motors with a push-on connector are exhausted.

Three wire harness

Parts required

Three pin connector
Part No. 191 906 232B — Qty 1
Rubber boot
Part No. 191 972 525B — Qty 2
Terminals
Part No. N 902 644 02 — Qty 3

Work sequence

— disconnect battery ground strap
— cut off old connector from wiring harness
— push wires through rubber boot
— attach terminal to wire
— insert wires into connector
(cavity numbers on connector)
- Red/Black to cavity **3**
- Red/White to cavity **2**
- Brown to cavity **1**

— attach connector to fan motor
— attach rubber boot
— reconnect battery ground strap
— check fan for proper operation

Two wire harness

Parts required

Three pin connector
Part No. 191 906 232B — Qty 1
Rubber boot
Part No. 191 972 525B — Qty 1
Terminals
Part No. N 902 644 02 — Qty 2

Work sequence

— disconnect battery ground strap
— cut off old connector from wiring harness
— push wires through rubber boot
— attach terminal to wire
— insert wires into connector
(cavity numbers on connector)
- Red/Black to cavity **2**
- Brown to cavity **1**

— seal cavity **3** with sealer **AMV176 000 05** or equivalent
— attach connector to fan motor
— attach rubber boot
— seal empty wire hole in rubber boot
— reconnect battery ground strap
— check fan for proper operation

CAUTION

Part numbers are listed for reference only. Always consult with the Parts Department for latest information.

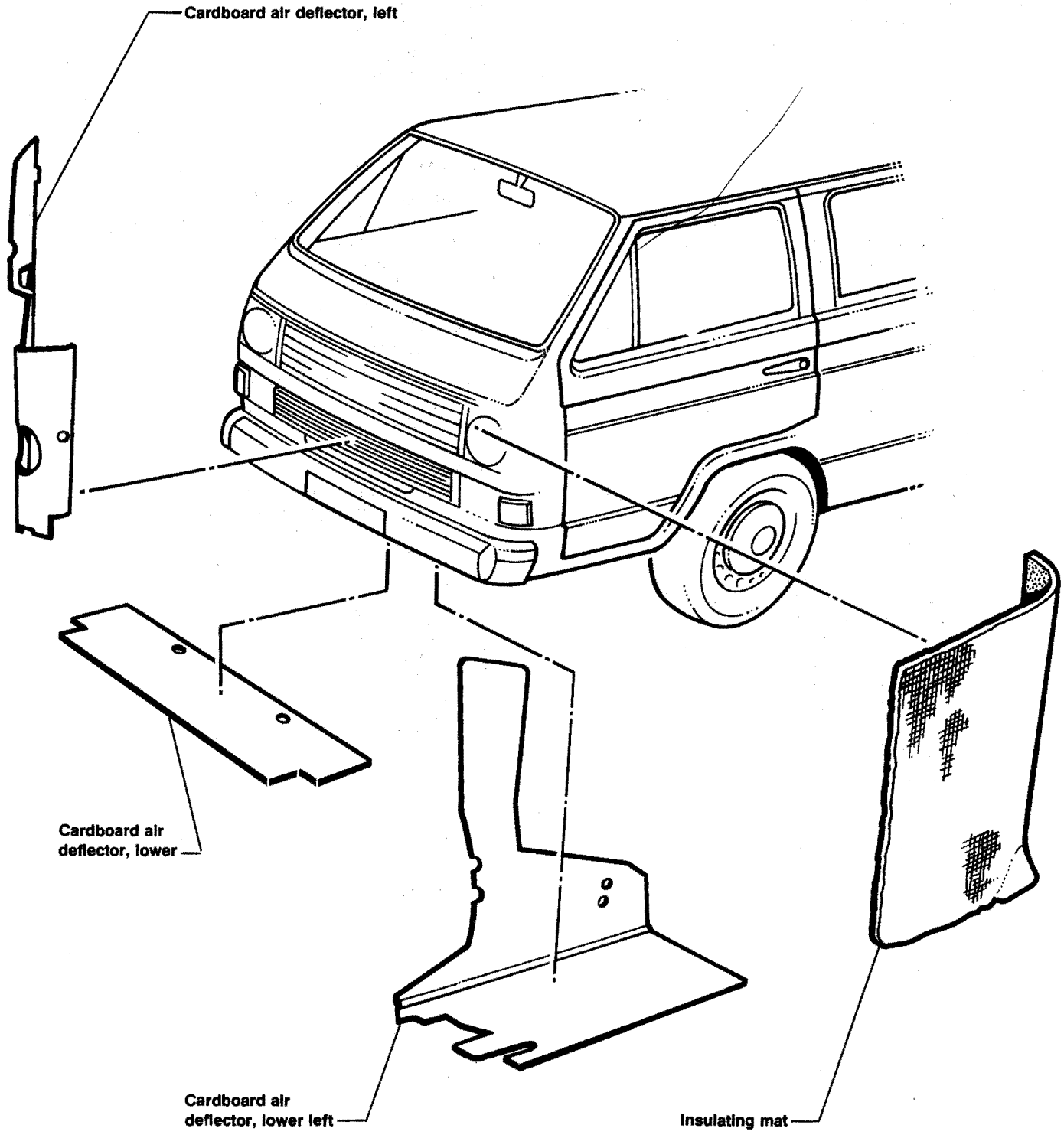

19.20 Hot footwell kit, assembly

Water-cooled

Hot footwell kit, installing

Parts

- Cardboard air deflector, left
  – delete
- Cardboard air deflector, lower
  – modify
- Cardboard air deflector, lower left
  – new part Part No. 251 121 291
- Insulating mat
  – new part Part No. 251 864 249 8

CAUTION

Part numbers are for reference only. Always check with your Parts Department for latest parts information.

Work sequence

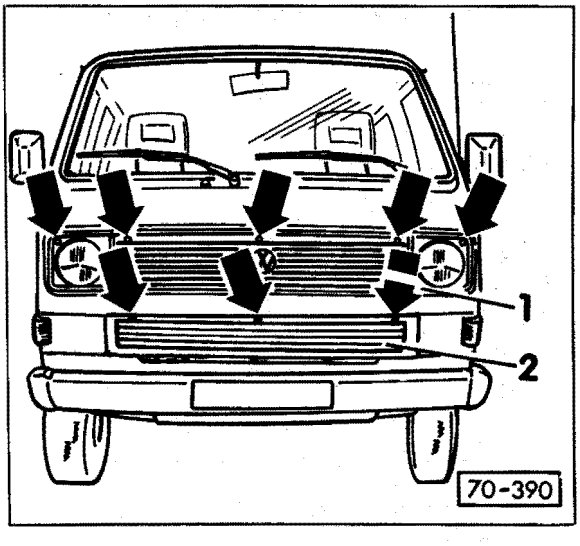

– remove fresh air intake trim **1** (five securing pins – upper arrows)
– remove radiator grille **2** (three Phillips screws – lower arrows)

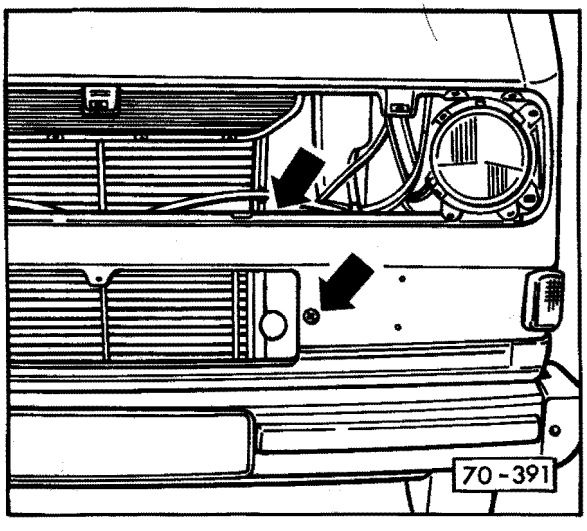

– pry out air deflector clip (upper arrow)
– remove Phillips screw from lower apron (lower arrow)
– disconnect radiator fan harness connector
– remove left cardboard air deflector
– reinstall radiator fan harness connector, fresh air intake trim, and radiator grille
– remove spare tire and left spare tire bracket

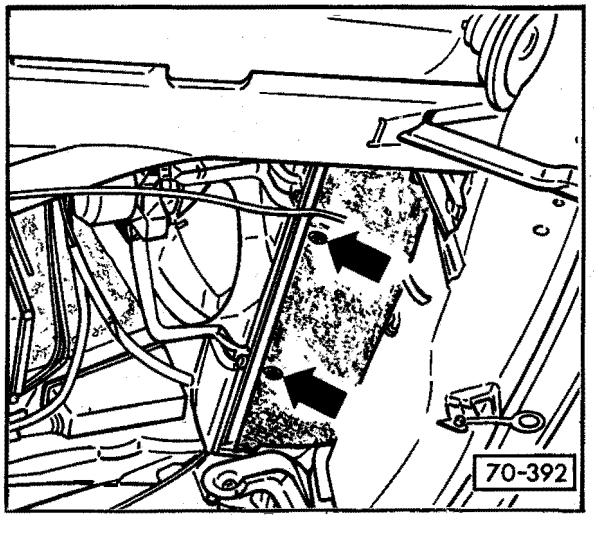

– remove lower cardboard air deflector by removing two Phillips screws (arrows)

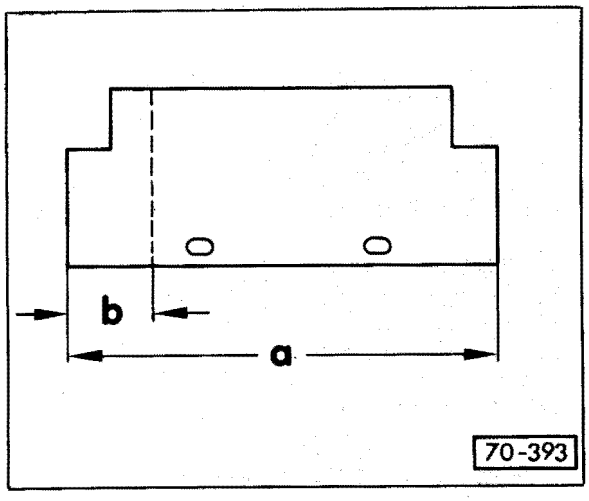

– shorten lower cardboard air deflector by 50mm (2.0 in.) and reinstall
  - dimension **a** = 490 mm (19.1 in.)
  - dimension **b** = 50 mm (2.0 in.)

Note

Vehicles equipped with air conditioning may already have the lower deflector modified

Vehicles with air conditioning

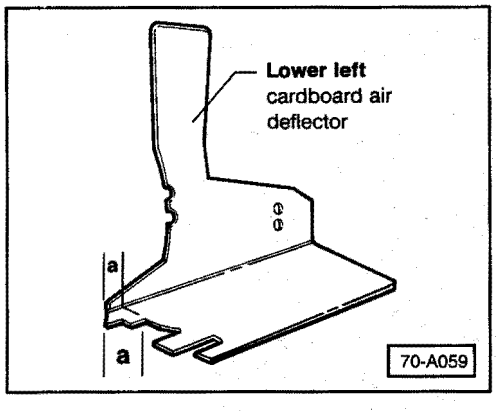

– modify lower left cardboard deflector
  - dimension **a** = 50 mm (2.0 in.)

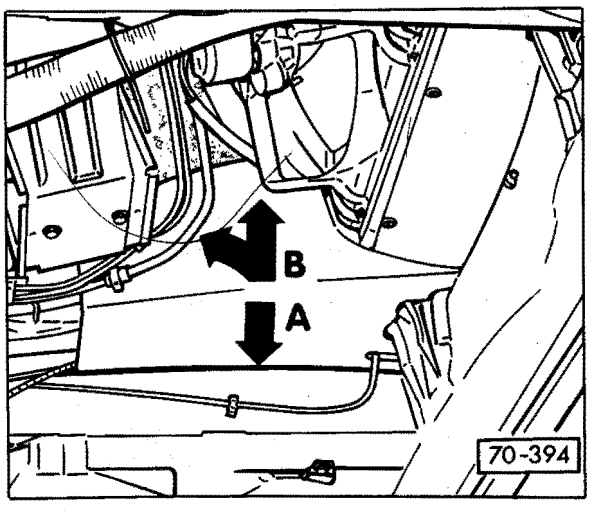

– push lower left cardboard air deflector over left longitudinal member (arrow **A**) and secure behind radiator fan shroud and brake lines (arrow **B**)
– reinstall spare tire bracket and spare tire

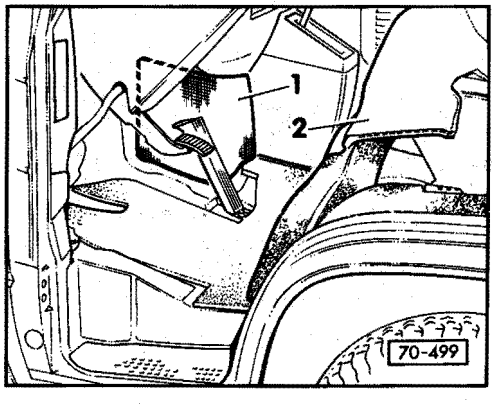

– fold back floor covering **2** from left side of console
– remove 25mm (1.0 in.) of backing from self-adhesive insulating mat **1** and apply to floor panel
– remove remaining backing and finish applying insulating mat
– reinstall floor covering **2**

Note

If the floor pan continues to heat up, adjust ventilation ducts so that fresh air is directed to the floor pan.

Index

Air-cooled AFC
—Accelerator linkage/cable
auto. trans. 20.8, 20.9
manual trans. 20.6, 20.7
—Fuel filter 20.4
—Fuel gauge sending unit 20.4
—Fuel pump 20.7
—Fuel system 20.2, 20.3
leak checking 20.5
—Fuel tank 20.4, 20.5

Diesel
—Accelerator linkage/cable 20.14
—Fuel gauge sending unit 20.13
—Fuel system 20.10, 20.11
leak checking 20.13
—Fuel tank 20.12

Water-cooled Digijet
—Accelerator linkage/cable
auto. trans. 20.23, 20.24
manual trans. 20.22
—Charcoal filter valve 20.20
—Fuel filter 20.18
—Fuel gauge sending unit 20.18
—Fuel pump 20.19
—Fuel system 20.16, 20.17
leak checking 20.21
—Fuel tank 20.18, 20.19

Water-cooled Digifant
—Accelerator linkage/cable
adjusting 20.32
auto trans. 20.31
manual trans. 20.30
—Charcoal filter 20.33
—Fuel gauge sending unit 20.29
—Fuel pump 20.29
—Fuel system 20.26, 20.27
leak checking 20.21
—Fuel tank 20.28

Note

California models, from 1981, have a:
- new fuel-tank filter that is self cleaning and requires NO SERVICING
- new and enlarged fine-mesh in-line fuel filter which requires NO SERVICING

Fuel supply system components, Removing and installing

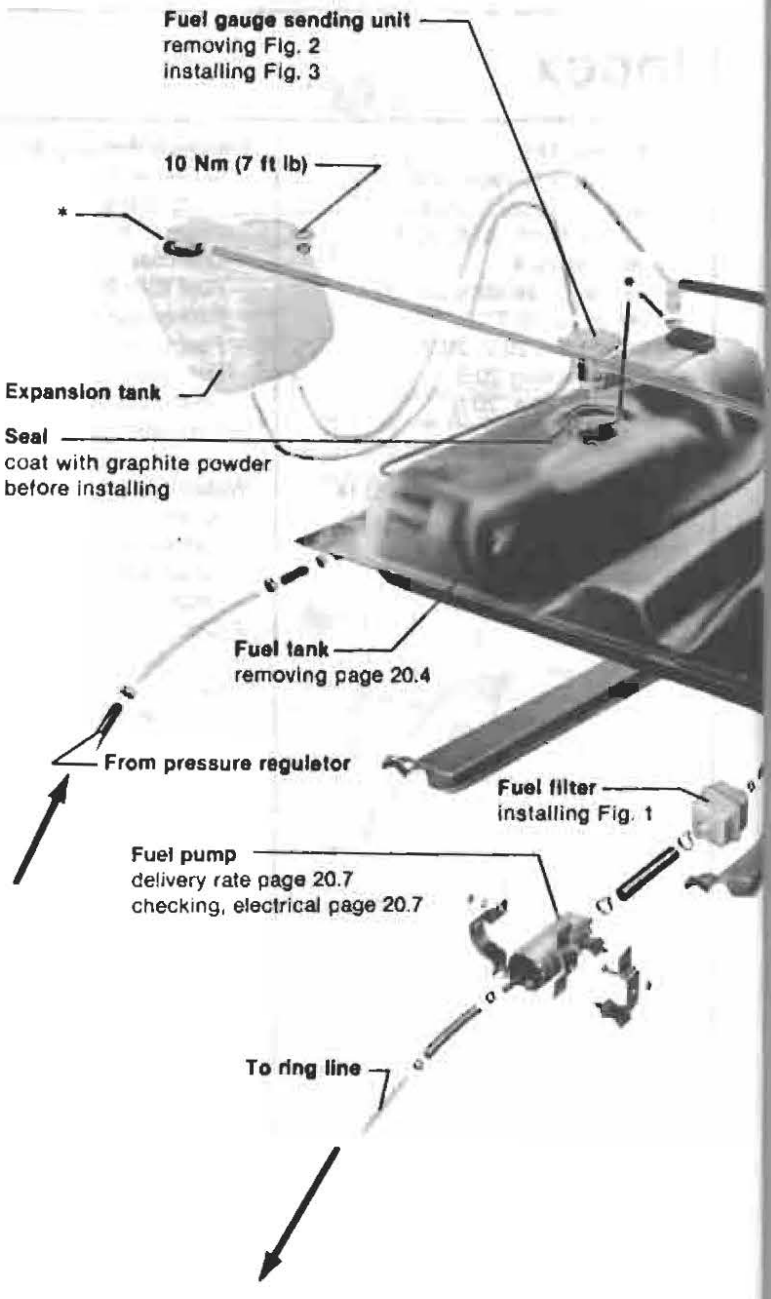

Note

Check system for leaks using a soap solution at spots marked with an *. Seal if necessary.

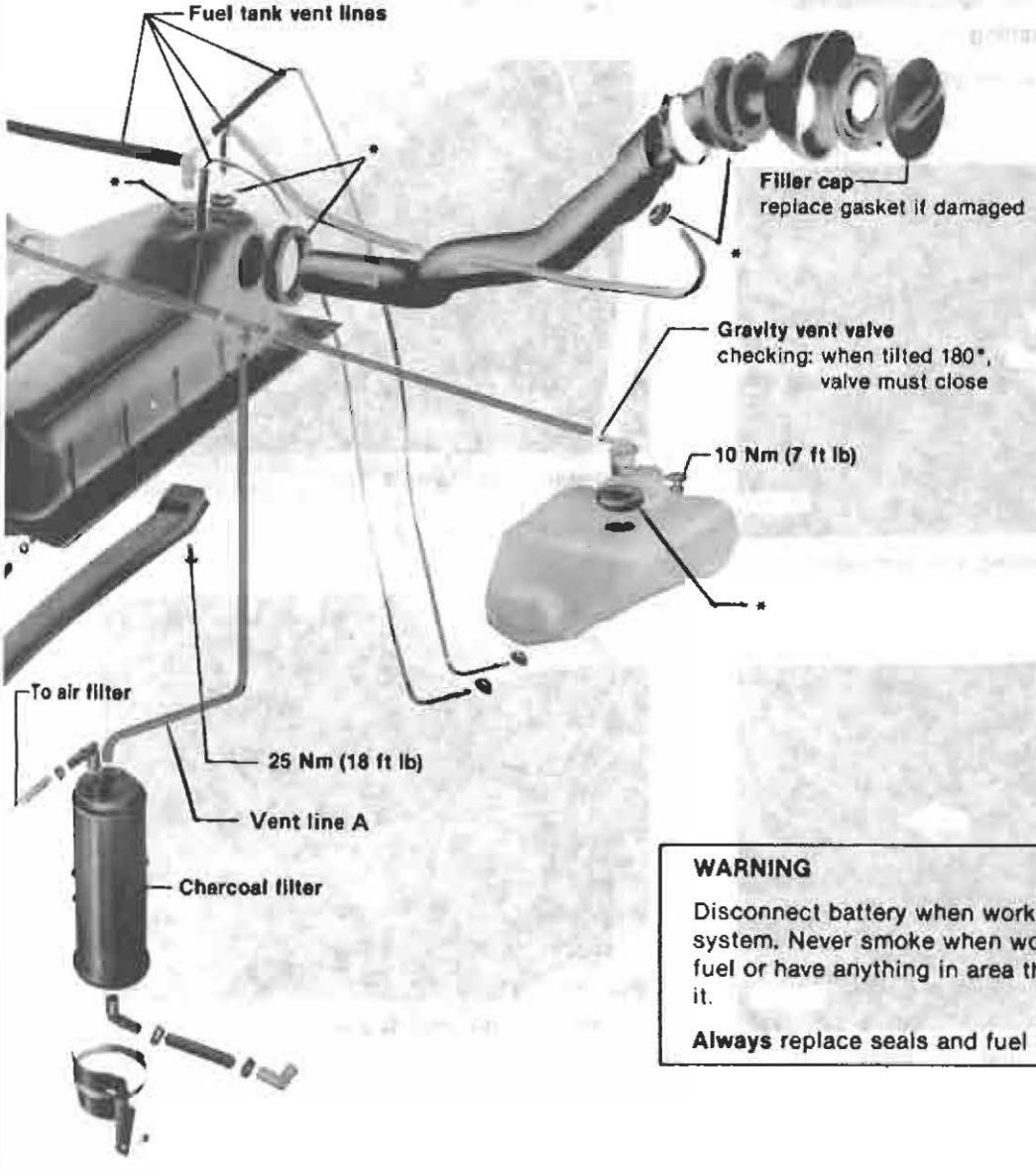

WARNING

Disconnect battery when working on fuel system. Never smoke when working with fuel or have anything in area that can ignite it.

Always replace seals and fuel hose clamps

20-304

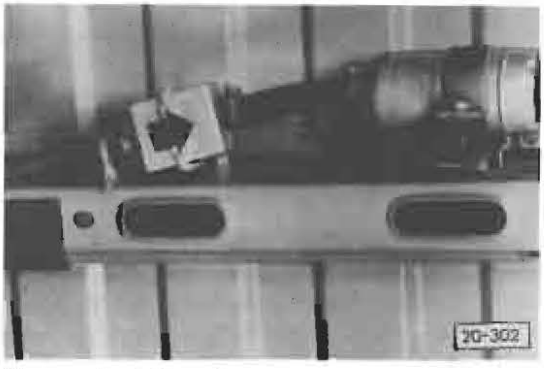

Fig. 1 Fuel filter, installing

— install with arrow pointing toward fuel pump

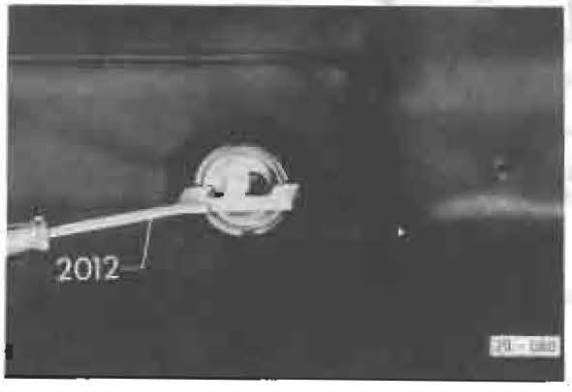

Fig. 2 Fuel gauge sending unit, removing

— first remove fuel tank

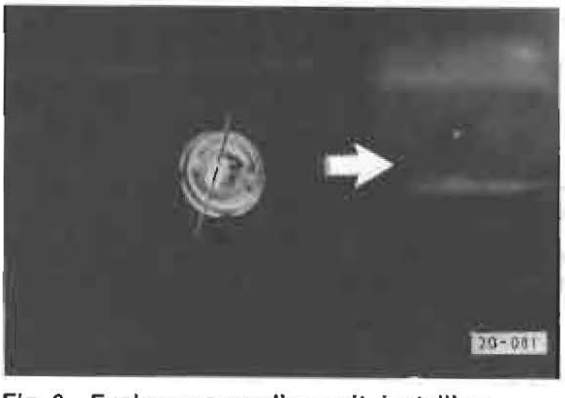

Fig. 3 Fuel gauge sending unit, installing

— coat seal with graphite powder and position carefully
— install sending unit with electrical connector as shown (arrow points to front of vehicle)

Fuel tank, removing

Work sequence

WARNING

Fire hazard! Do not smoke or have anything in area that can ignite fuel

— disconnect battery ground cable
— drain fuel tank

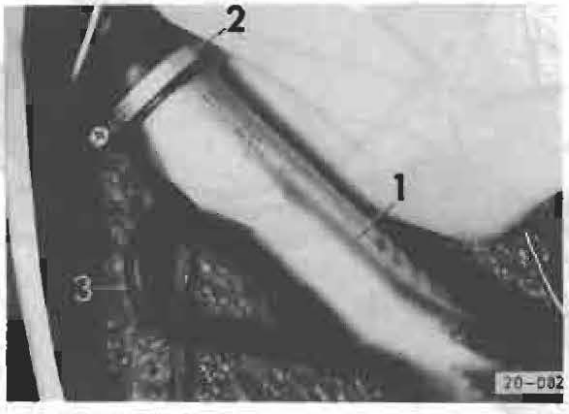

— loosen hose clamp **2**
— remove filler neck **1**
— remove vent hose **3**

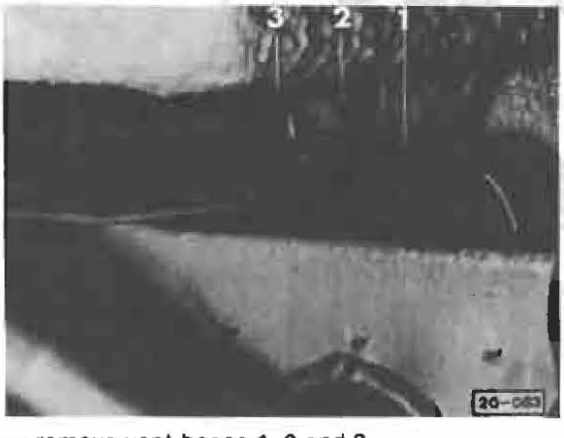

— remove vent hoses **1**, **2** and **3**

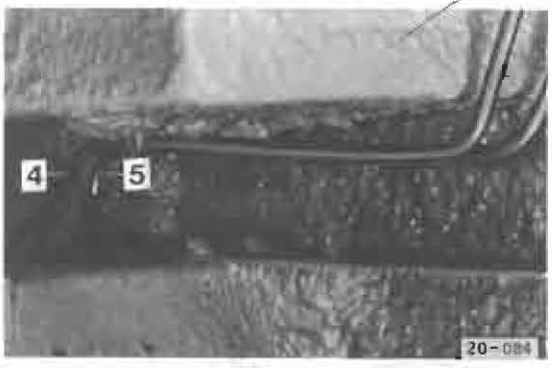

— remove vent hoses **4** and **5**



— remove fuel supply hose **1** and fuel return hose **2** from fuel tank

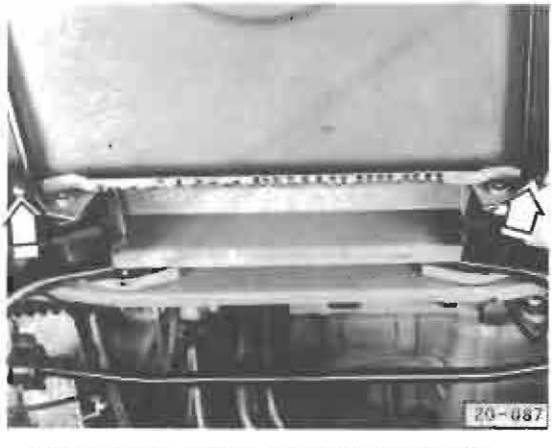

— loosen bolts on fuel tank mounting rails (white arrows) and remove rails from rear channel
— lower fuel tank and disconnect electrical connector on fuel gauge sending unit
— remove fuel tank

Fuel system, leak checking

Refer to illustration on pages 20.2 and 20.3 for location of vent line indicated below.

After removal/repairs on fuel tank, always check fuel system for leaks as follows:

— remove small hose **A** from activated charcoal filter and connect to leak tester US 4487.
— set leak tester scale to "0".
— pressurize system with hand pump to 1.3 in. of mercury.

- system OK if pressure is 1.0 in. or greater after 5 minutes.
- system leaking if pressure drops below 1.0 in. after 5 minutes.

Note

Check system for leaks using soap solution at spots marked with an *. Seal if necessary.

Accelerator linkage/cable
Manual transmission

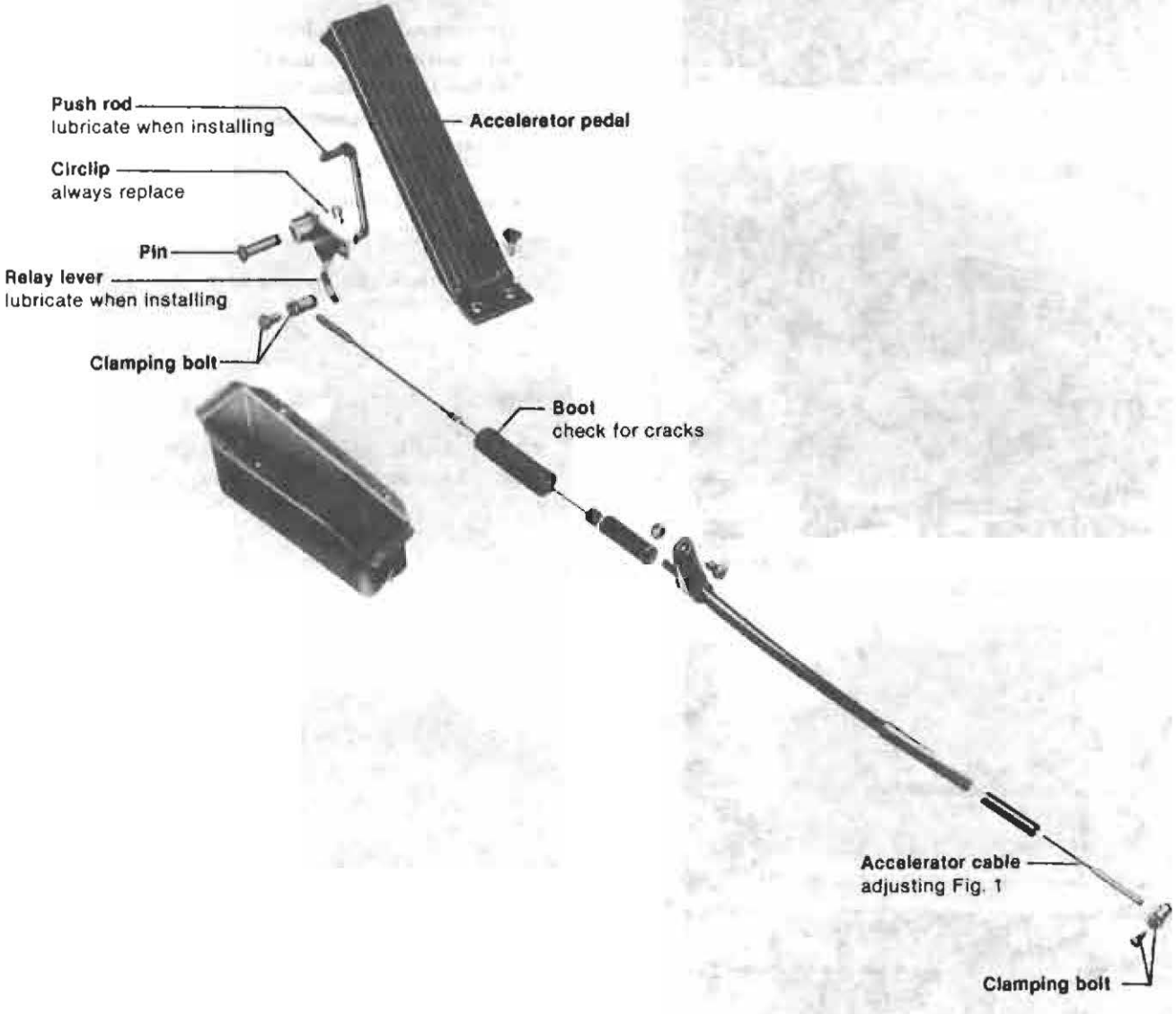

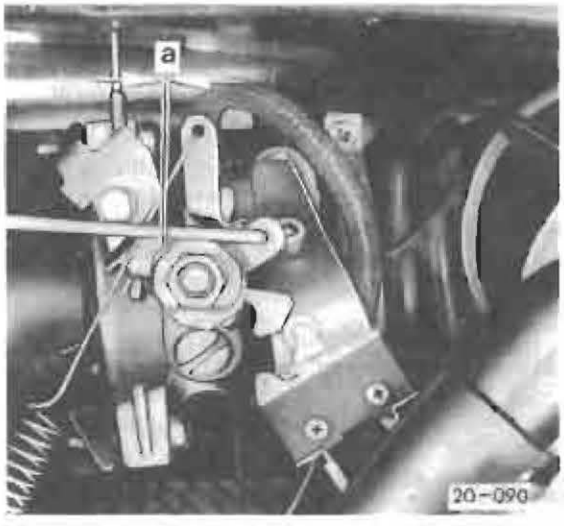

Fig. 1 **Accelerator cable, adjusting**

— adjust cable so that clearance is obtained between throttle valve lever and stop on throttle valve housing
• **a** = 1.0–1.5mm (0.040–0.060 in.)

Fuel pump delivery rate, checking

Work sequence

WARNING

Fire hazard! Never smoke or have anything in area that can ignite fuel

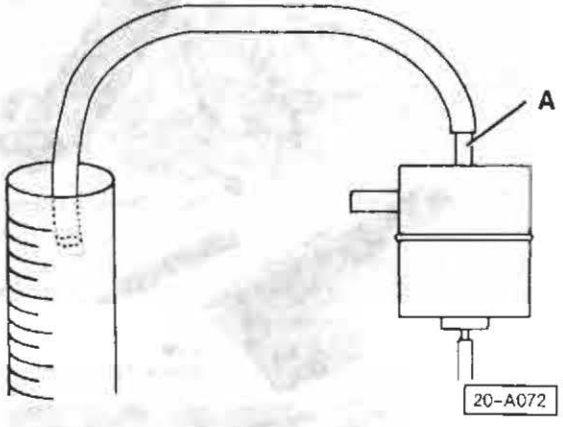

— disconnect fuel return line at pressure regulator
— attach hose to return line fitting on pressure regulator **A** and place other end of hose in one quart measuring container
— turn on ignition and open air sensor (or bridge air sensor plug terminals 36 and 39). Run pump exactly 30 seconds
• delivery quantity should be at least 500 cc (approx. 1/2 quart)
If **NO**, check fuel filter is not blocked, ground connections are O.K. and voltage at pump is at least 11.5 volts before replacing pump

Fuel pump, checking (electrical)

Note

Battery must be fully charged

— connect ammeter at fuel pump in series with pump and current supply

CAUTION

Do not touch positive connection to ground

— turn on ignition and open air sensor flap (or bridge air sensor plug terminals 36 and 39)
• ammeter should read 6.5–8.5 amps
• lower reading may indicate poor ground connections
• higher reading usually indicates dragging pump motor and unit must be replaced

Accelerator linkage/cable
Automatic transmission

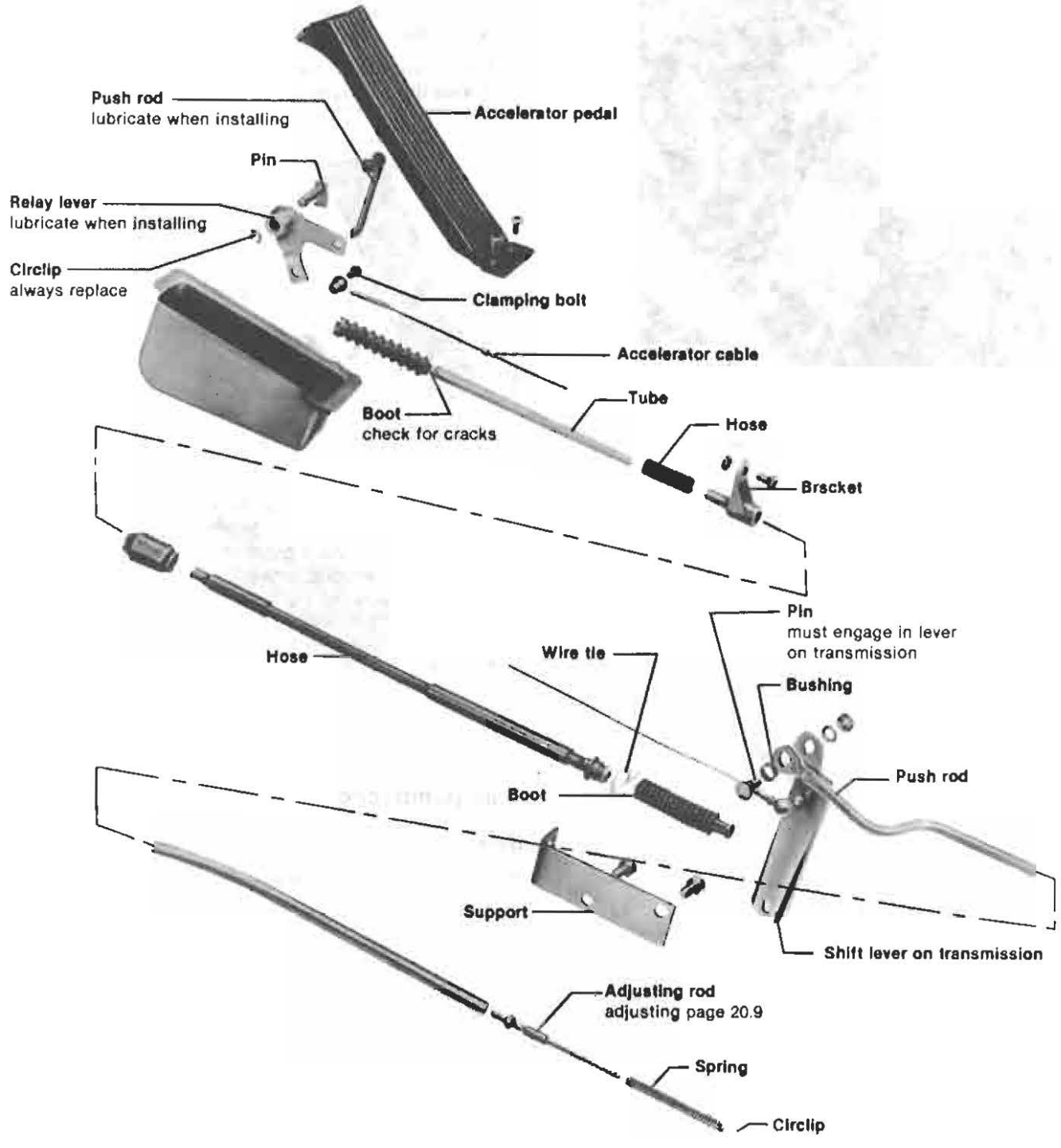

Accelerator linkage/cable adjustment, checking
(automatic transmission)

Work sequence

— depress accelerator pedal to full throttle position
  • throttle valve lever must contact stop, but kickdown lever on transmission must **not** be in kickdown position
— press accelerator pedal beyond full throttle to floor
  • override spring must be tensioned and kickdown lever on transmission must be in kickdown position

if **NO**, adjust as follows:

Accelerator linkage/cable, adjusting
(automatic transmission)

Work sequence

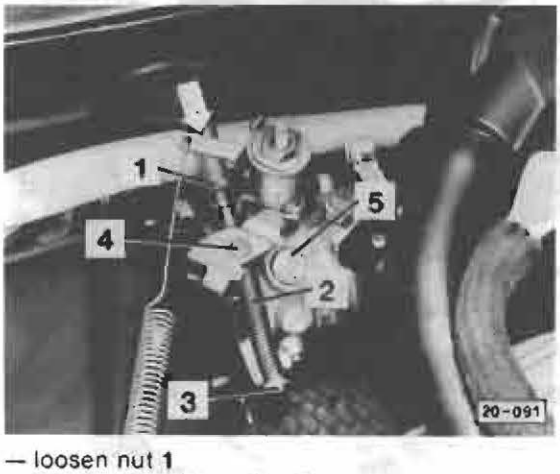

— loosen nut **1**
— remove override spring **2**
— start engine and let idle

— adjust idle speed at screw **5** (see Repair Group 24)
— shut engine **OFF**
— press accelerator rod in direction of arrow to stop

— turn adjusting rod **3** with screwdriver until shoulder of adjusting rod just contacts pivot of throttle lever **4**
— reinstall override spring **2**
— start engine and check idle speed
  • adjust if necessary by turning rod **3**
— lock adjusting rod **3** in position with nut **1**

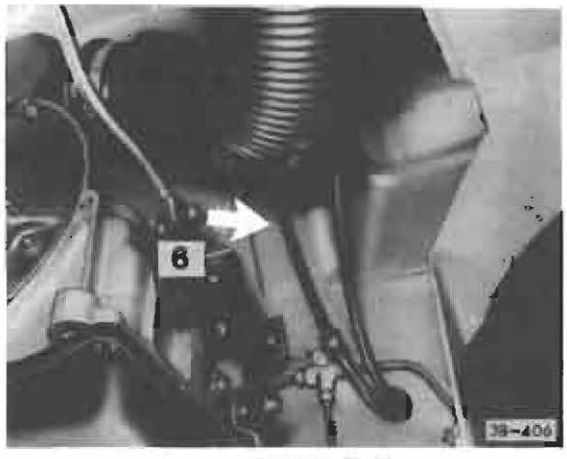

— press accelerator pedal to floor
  • lever **6** must be in kickdown position (arrow), with approx. 1-2mm (1/32-3/32 in.) free play between lever and stop
— release accelerator pedal
— lever must be in idle position (out of kickdown)



— if necessary, adjust accelerator cable at clamping bolt (arrow)

WARNING

Disconnect battery when working on fuel system. Never smoke when working with fuel or have anything in area that can ignite it.

Always replace seals and fuel hose clamps.

Always clean fuel lines before loosening

Fuel supply system components, Removing and installing

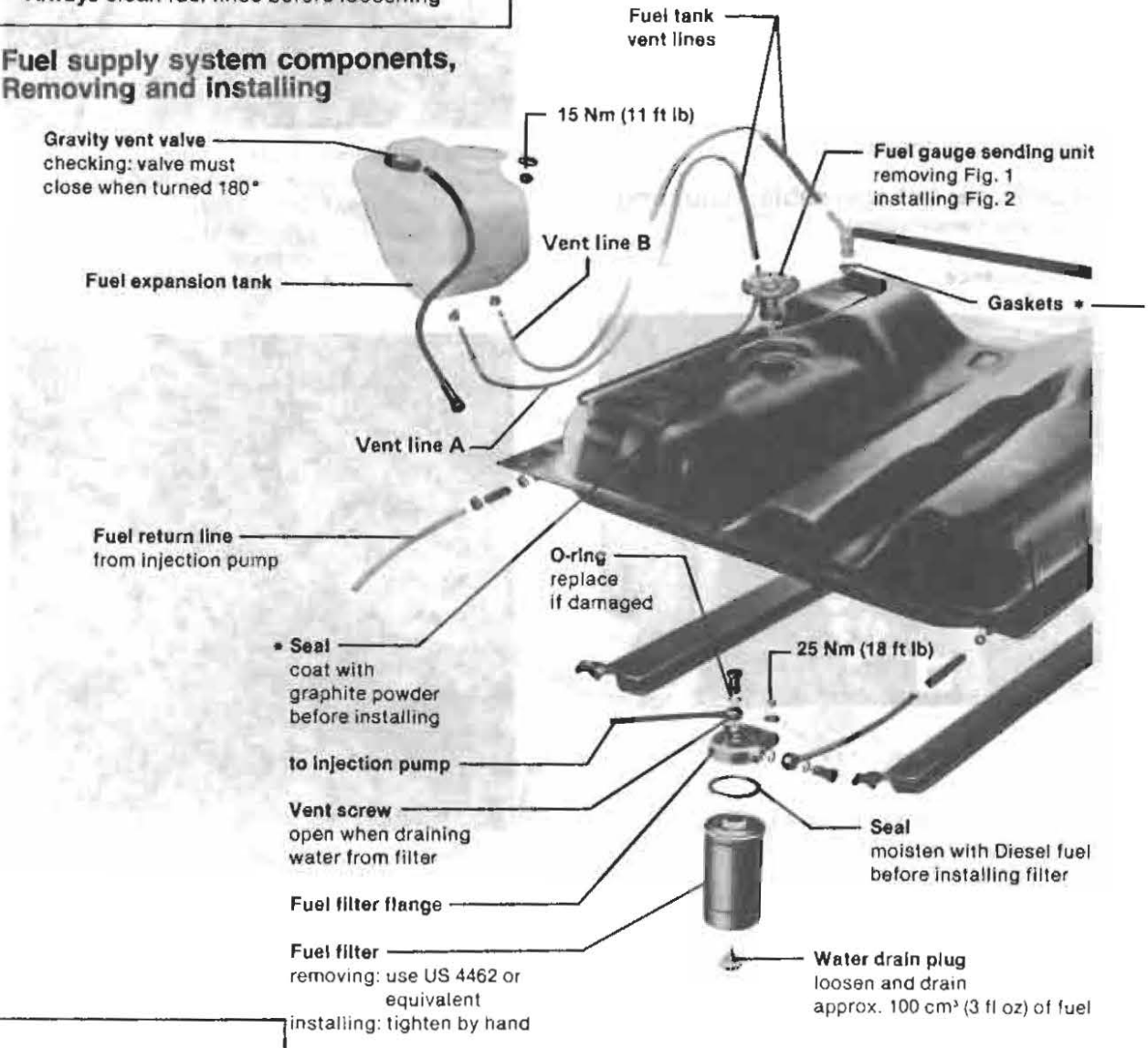

CAUTION

Use only approved fuel filters for maintenance service or repairs. Not all after-market filters meet the filtering, fuel flow, or water separation requirements of the injection system.

WARNING

Disconnect battery when working on fuel system. Never smoke when working with fuel or have anything in area that can ignite it.

Always replace seals and fuel hose clamps.

Always clean fuel lines before loosening

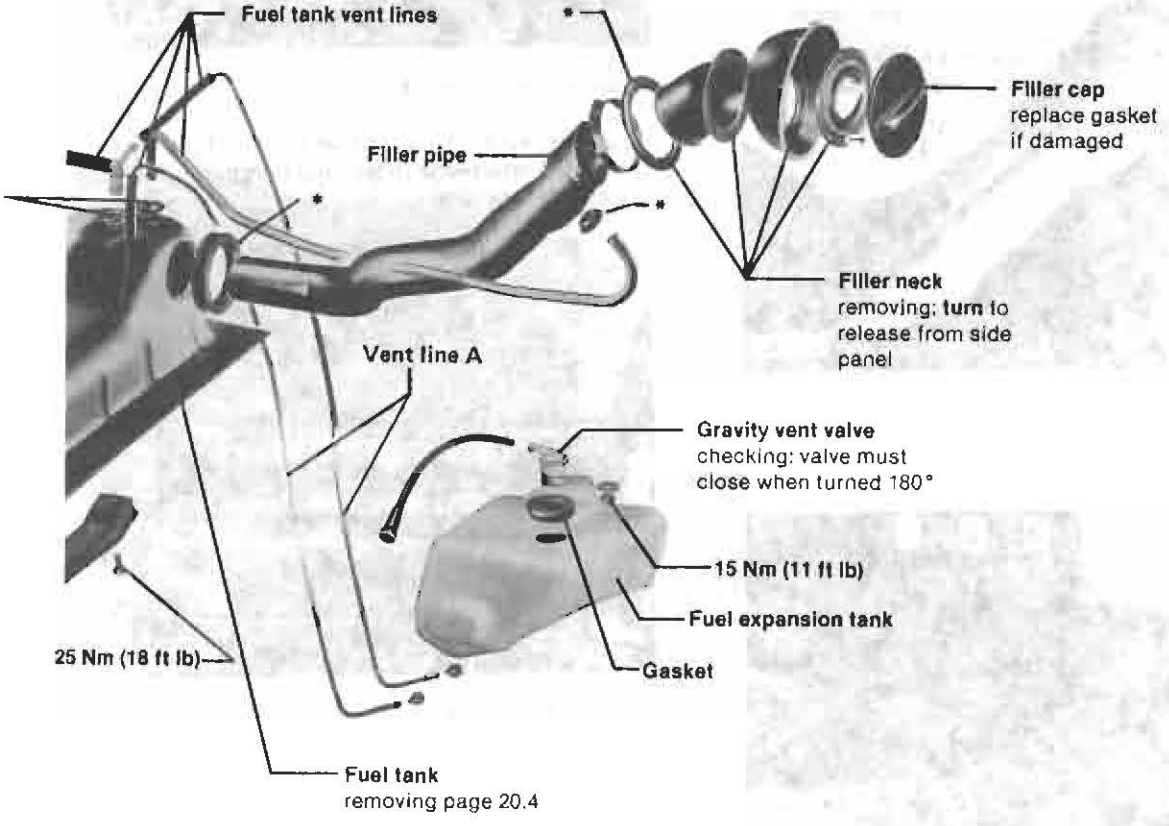

Note

Check system for leaks using a soap solution at spots marked with an *. Seal if necessary.

Fuel tank, removing

Work sequence

WARNING

Fire hazard! Do not smoke or have anything in area that can ignite fuel

—disconnect battery ground cable
—drain fuel tank

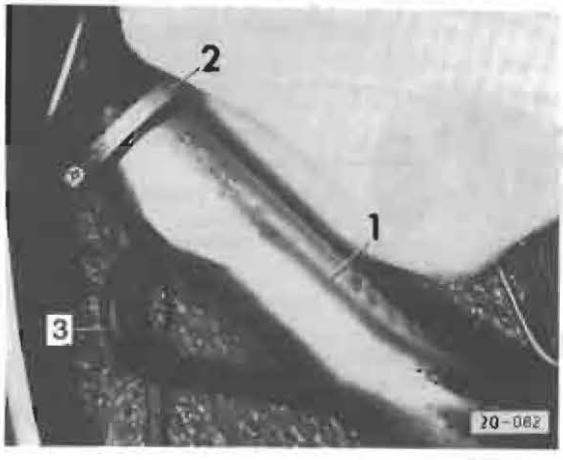

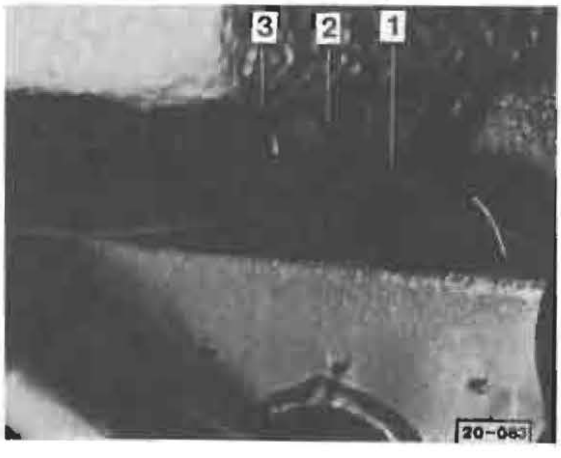

—remove vent hoses **1**, **2** and **3**

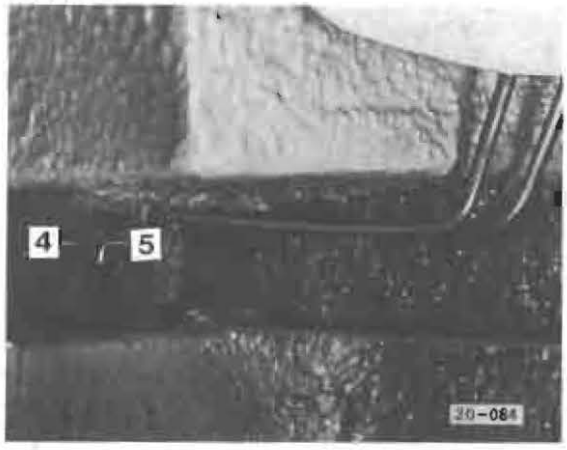

—remove vent hoses **4** and **5**

—pull fuel suction line (to fuel filter on right side) and fuel return line (from injection pump, left side) off fuel tank

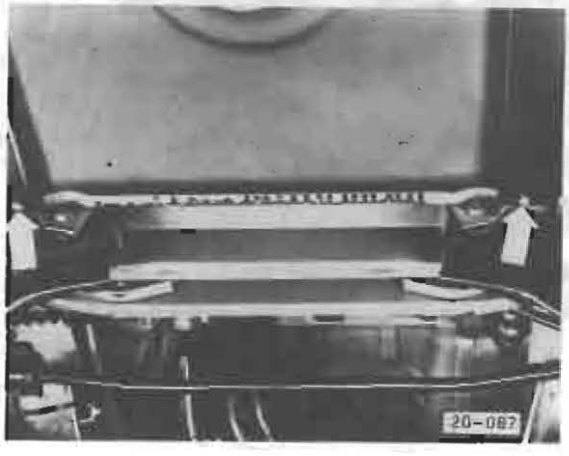

—loosen bolts on fuel tank mounting rails (white arrows) and remove rails from rear channel
—lower fuel tank and disconnect electrical connector on fuel gauge sending unit
—remove fuel tank

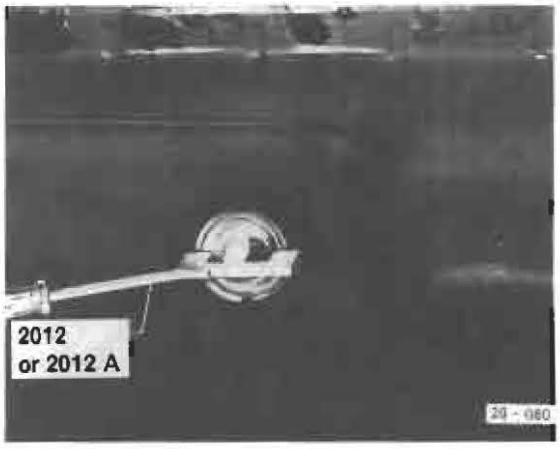

Fig. 1 Fuel gauge sending unit, removing

—first remove fuel tank

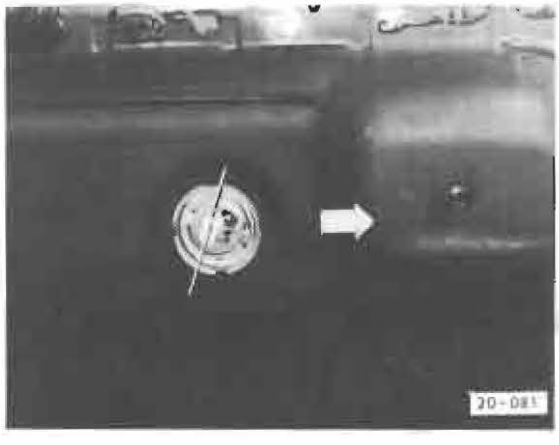

Fig. 2 Fuel gauge sending unit, installing

—coat seal with graphite powder and position carefully
—install sending unit with electrical connector as shown (arrow points to **front** of vehicle)

Fuel system, leak checking

Refer to illustration on pages 20.10 and 20.11 for location of vent lines indicated below.

After repairs/removal of fuel tank, always check fuel system for leaks as follows:

– pinch off all 3 vent hoses **A** with clamp.
– remove vent hose **B** from canister and connect to leak tester US 4487.
– set leak tester scale to "0".

– pressurize fuel system with hand pump to 1.3 in. of mercury.

- system OK if pressure remains at 1.0 in. Hg or greater after 5 minutes.
- system not OK if pressure drops below 1.0 in. Hg after 5 minutes.

Note

Check system for leaks using a soap solution at spots marked with an *. Seal if necessary.

Accelerator linkage/cable
Manual transmission

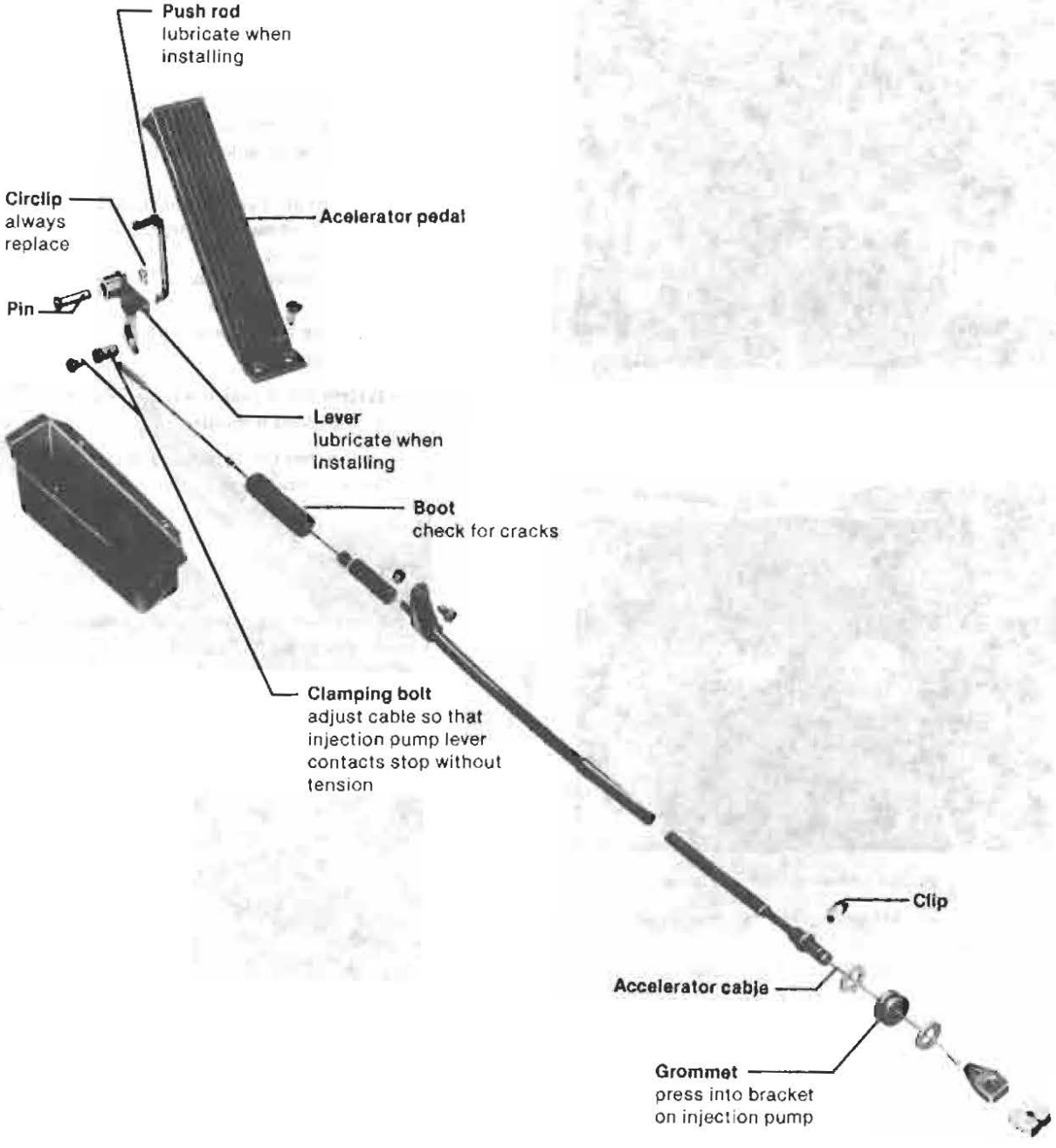

THIS PAGE INTENTIONALLY
LEFT BLANK

Fuel supply system components, Removing and installing

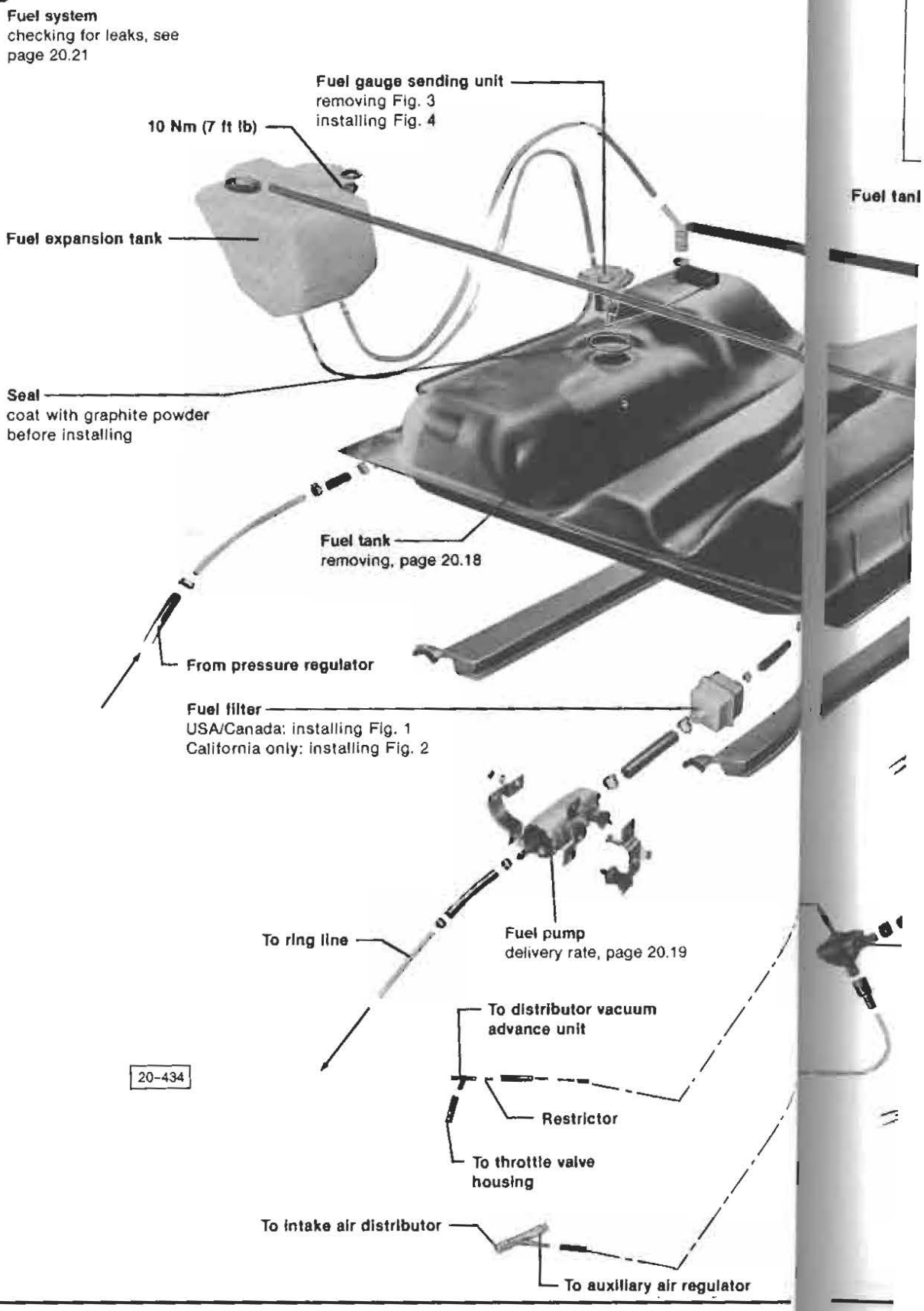

WARNING

Disconnect battery when working on fuel system. Never smoke when working with fuel or have anything in area that can ignite it.

Always replace seals and fuel hose clamps

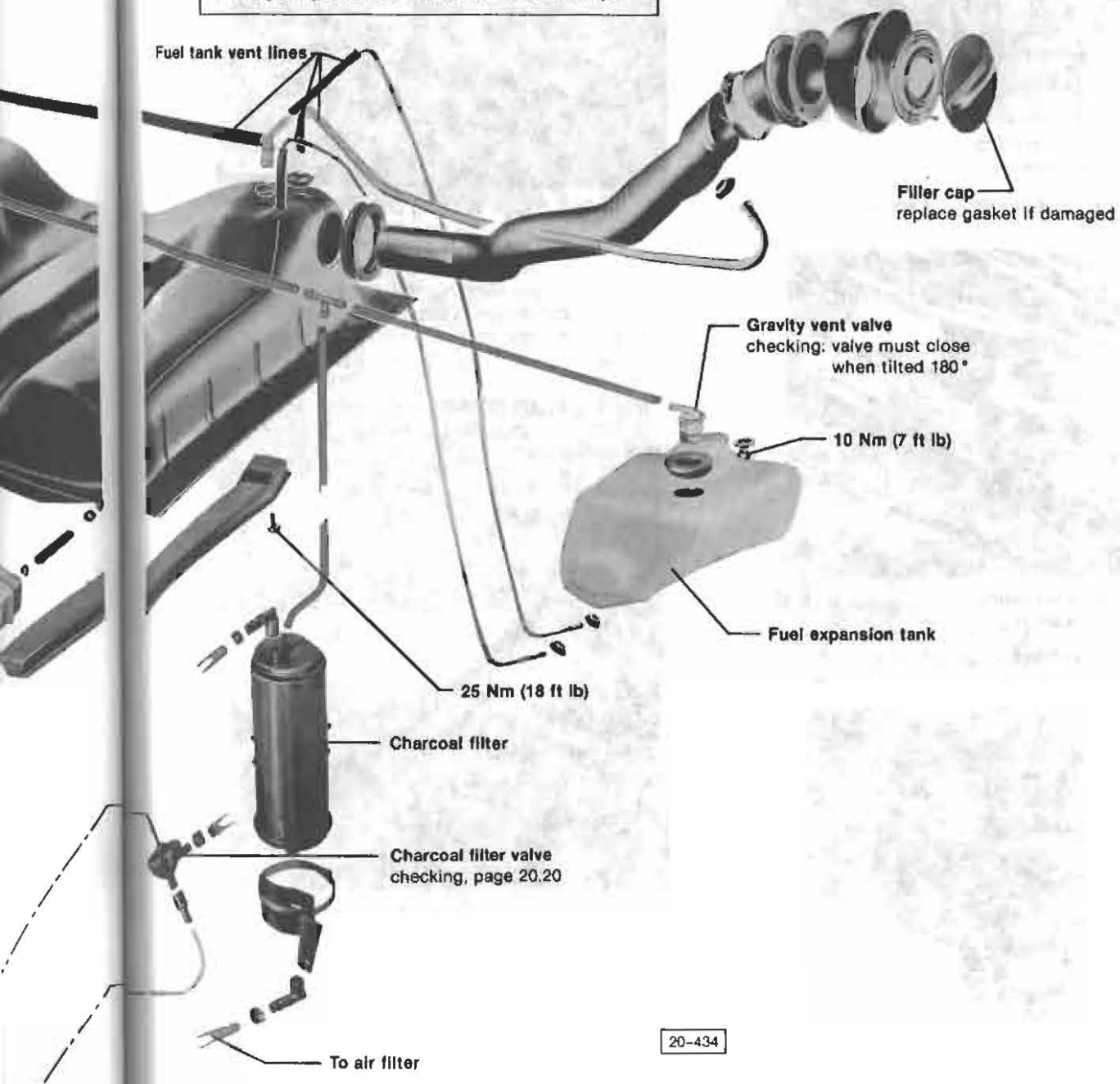



Fig. 1 Fuel filter, installing (USA and Canada)

• arrow on filter faces toward fuel pump



Fig. 2 Fuel filter, installing (California only)

• arrow on filter faces toward engine



Fig. 3 Fuel gauge sending unit, removing

— before removing unit, remove fuel tank

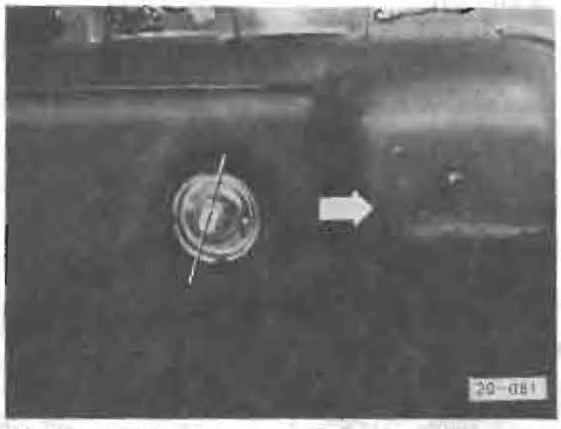

Fig. 4 Fuel gauge sending unit, installing

— coat seal with graphite powder and position carefully
— install sending unit so that electrical connector is aligned with dotted line
• arrow points to front of vehicle

Fuel tank, removing

Work sequence

— disconnect battery ground strap
— drain fuel tank

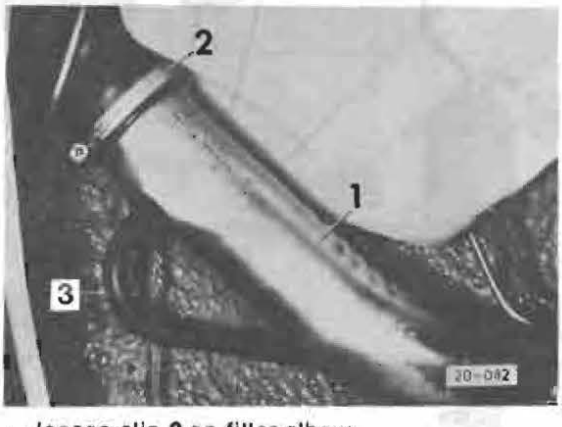

— loosen clip **2** on filler elbow
— remove filler pipe **1** and pull out breather pipe **3**
— go to next page

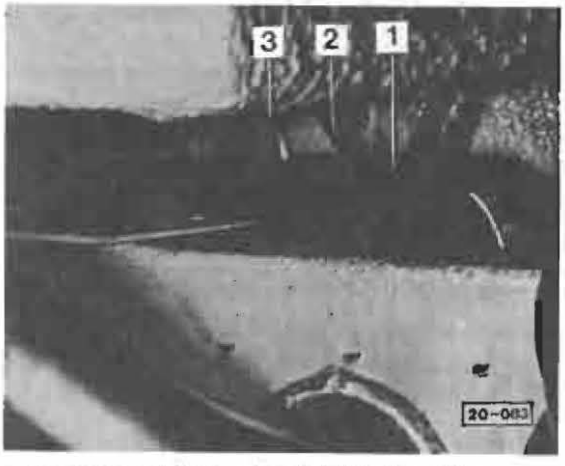

— remove vent hoses (on right) **1**, **2** and **3**

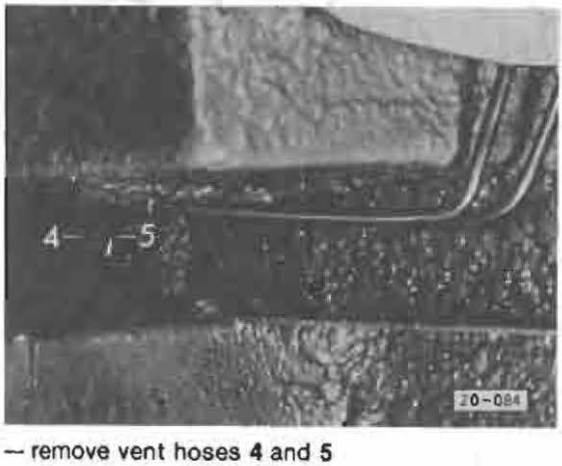

— remove vent hoses **4** and **5**

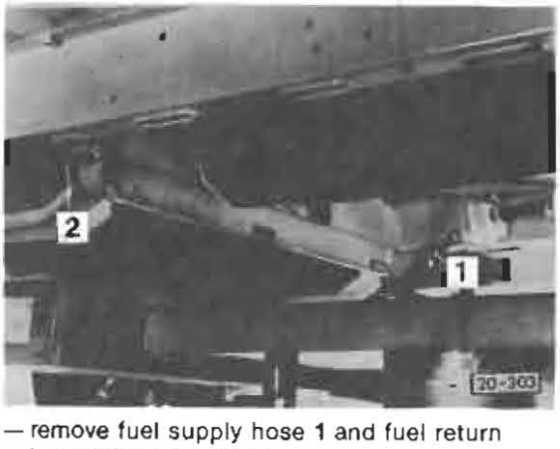

— remove fuel supply hose **1** and fuel return hose **2** from fuel tank

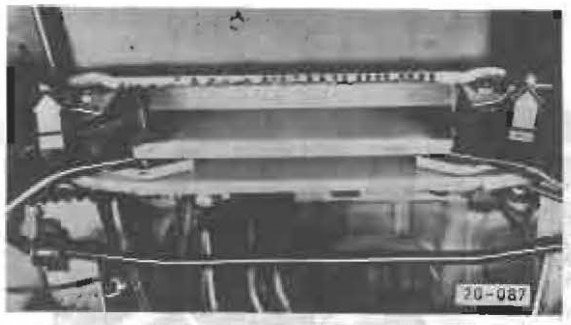

— loosen bolts on fuel tank mounting rails (white arrows) and remove rails from rear channel
— lower fuel tank and disconnect electrical connector on fuel gauge sending unit
— remove fuel tank

Fuel pump delivery rate, checking

Work sequence

WARNING

Fire hazard! Never smoke or have anything in area that can ignite fuel

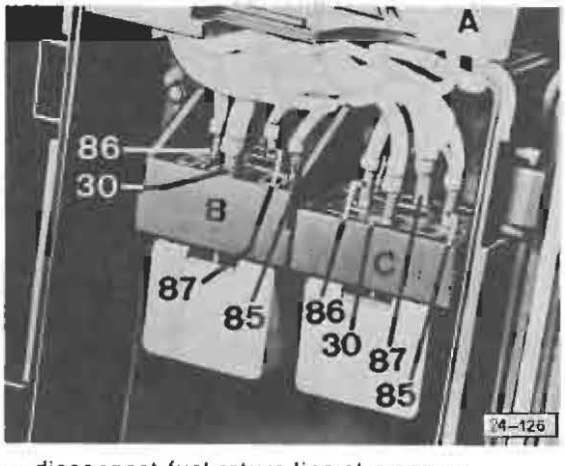

— disconnect fuel return line at pressure regulator and block line
— attach hose to return line fitting on pressure regulator and place other end of hose in one quart measuring container
— remove relay **C**
— connect terminals **30** and **87** with tester US 4480/3
— switch on for 30 seconds
  • minimum fuel delivery rate should be **500 cm³**

Charcoal filter valve, checking



— disconnect hose **1** from charcoal filter valve **2**
— connect vacuum pump to filter valve connection instead of hose **1**
— disconnect hose **3** from T-piece **4**

— operate vacuum pump and suck with mouth on hose **3**
  • filter valve must be **open**
— **without** operating vacuum pump suck with mouth on hose **3**
  • filter valve must be **closed**

If NOT, replace charcoal filter valve

Fuel system, checking for leaks

(Vehicles with rear wheel drive ONLY)

> **WARNING**
>
> Disconnect battery when working on fuel system. Never smoke when working with fuel or have anything in area that can ignite it.

Note

After performing repairs on fuel tank, always check fuel system for leaks as follows:

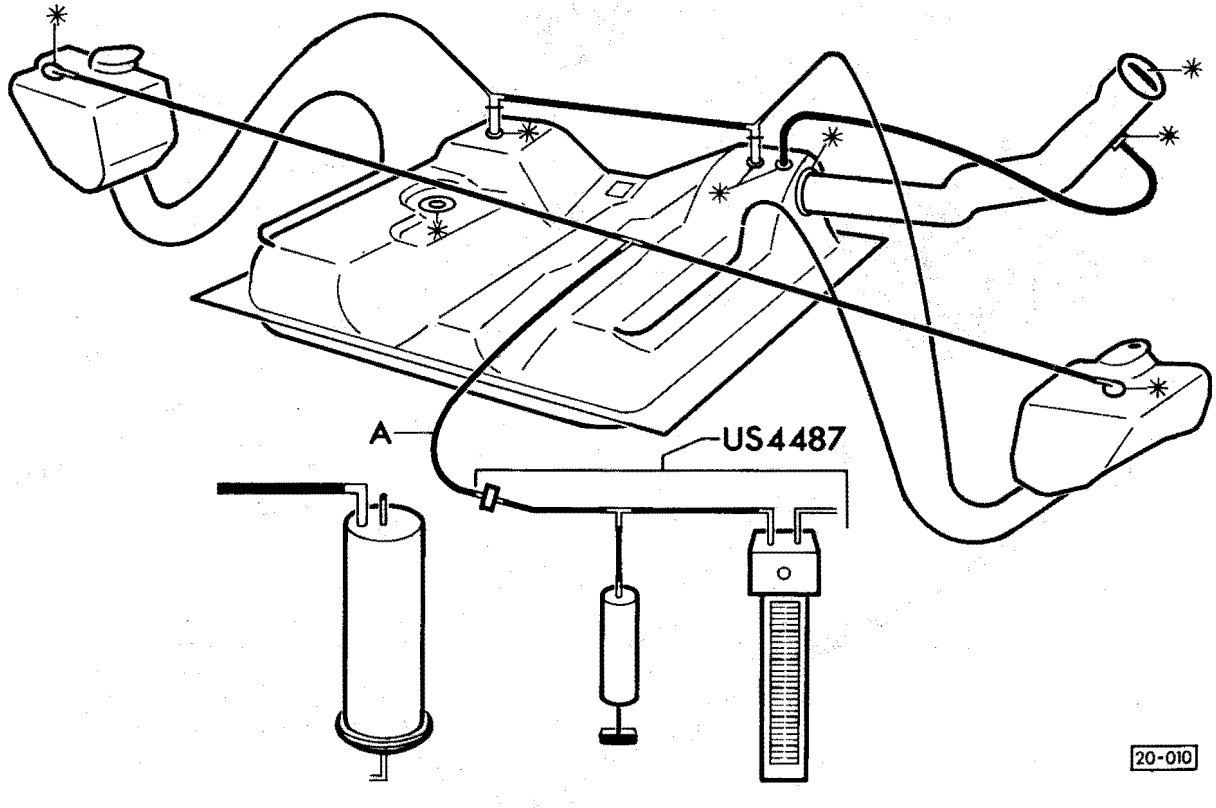

Work sequence

— Remove small hose **A** at charcoal filter and connect to leak tester US 4487
— Set leak tester scale to "**0**"
— Pressurize system with hand pump to 3.3 cm (1.3 in) of mercury
- system OK if pressure is 2.54 cm (1.0 in) or greater after 5 minutes
- system leaking if pressure drops below 2.54 cm (1.0 in) after 5 minutes

Note

Check system for leaks using soap solution at spots marked with ✳ Seal if necessary.

Accelerator linkage/cable
Manual transmission

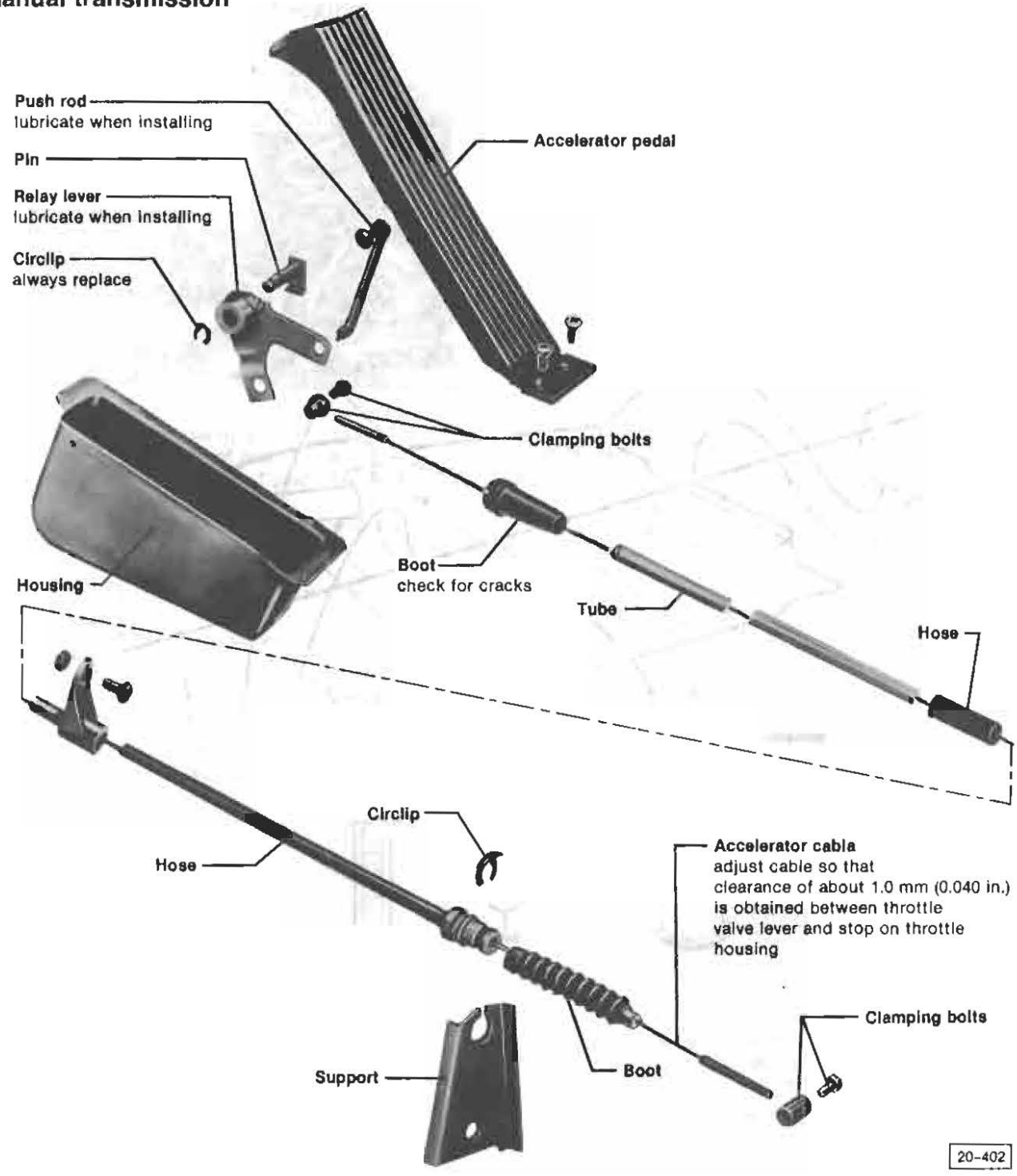

Accelerator linkage/cable
Automatic transmission

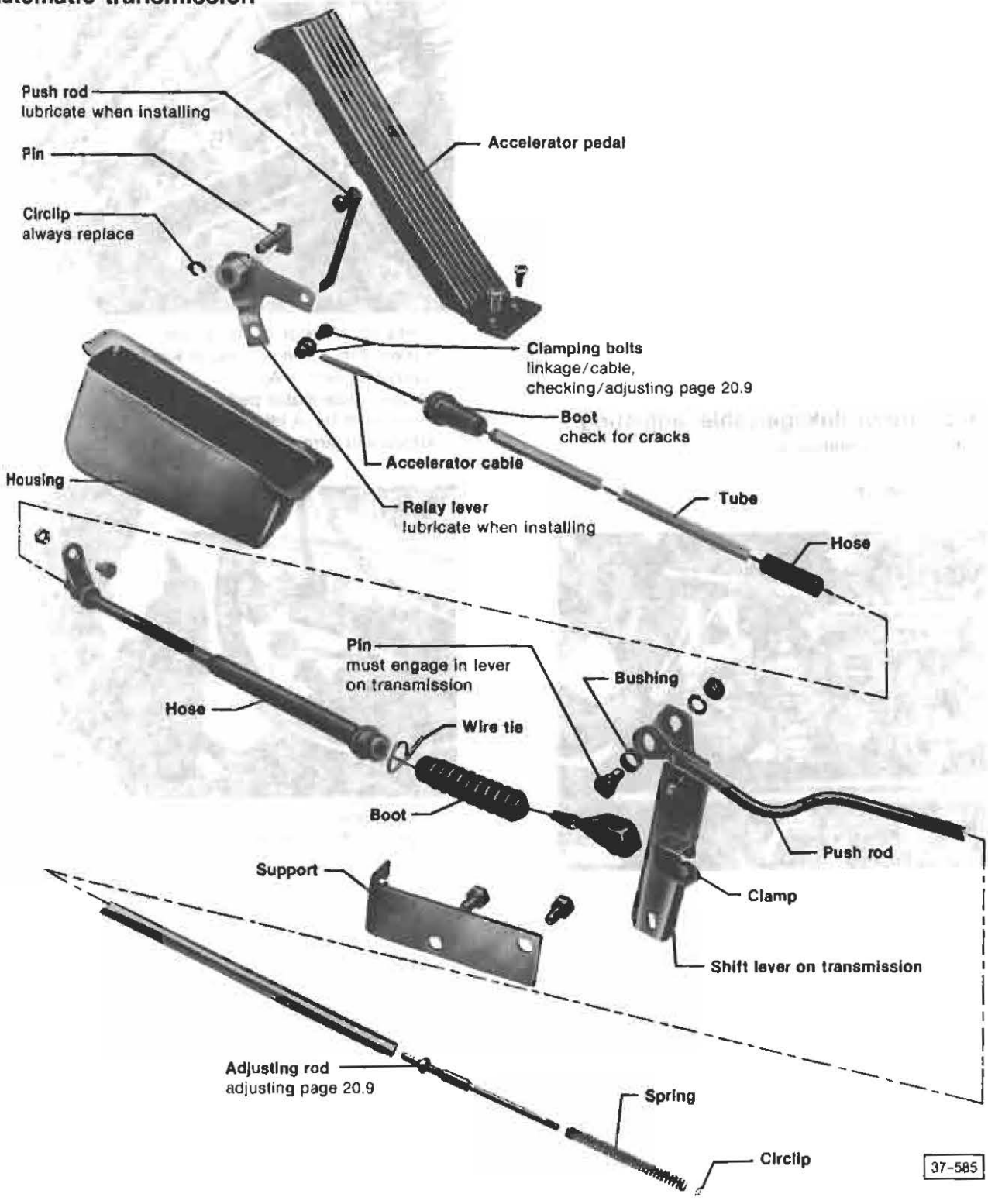

Accelerator linkage/cable adjustment, checking
(automatic transmission)

Work sequence

— depress accelerator pedal to full throttle position
  • throttle valve lever must contact stop, but kickdown lever on transmission must **not** be in kickdown position
— press accelerator pedal beyond full throttle to floor
  • override spring must be tensioned and kickdown lever on transmission must be in kickdown position

if **NO**, adjust as follows:

Accelerator linkage/cable, adjusting
(automatic transmission)

Work sequence

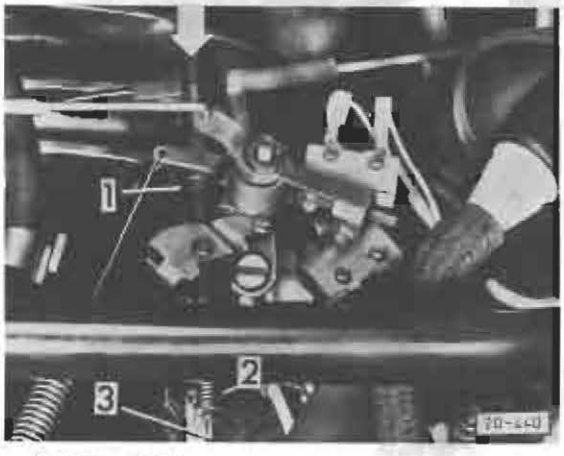

— loosen nut **1**
— remove override spring **2**
— start engine and let idle

— adjust idle speed at screw (see Repair Group 24)
— shut engine **OFF**
— press accelerator rod in direction of arrow to stop

— turn adjusting rod **3** with screwdriver until shoulder of adjusting rod just contacts pivot of throttle lever
— reinstall override spring **2**
— start engine and check idle speed
  • adjust if necessary by turning rod **3**
— lock adjusting rod **3** in position with nut **1**

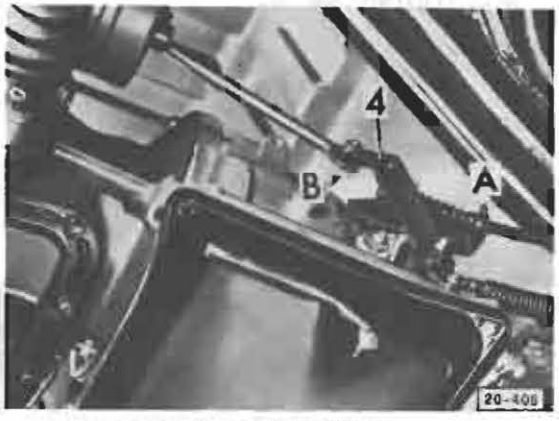

— press accelerator pedal to floor
  • lever **4** must be on stop in kickdown position (arrow **A**)
— release accelerator pedal
— lever must be in idle position (out of kickdown) (arrow **B**)

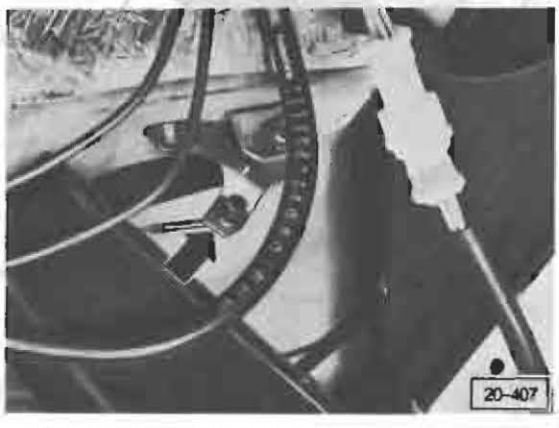

— if necessary, adjust accelerator cable at clamping bolt (arrow)

THIS PAGE INTENTIONALLY
LEFT BLANK

Fuel supply system components, Removing and installing

WARNING

Disconnect battery ground strap when working on fuel system. Never smoke when working with fuel or have anything in area that can ignite it.

Always replace seals and fuel hose clamps. **Always** clean fuel lines before loosening.

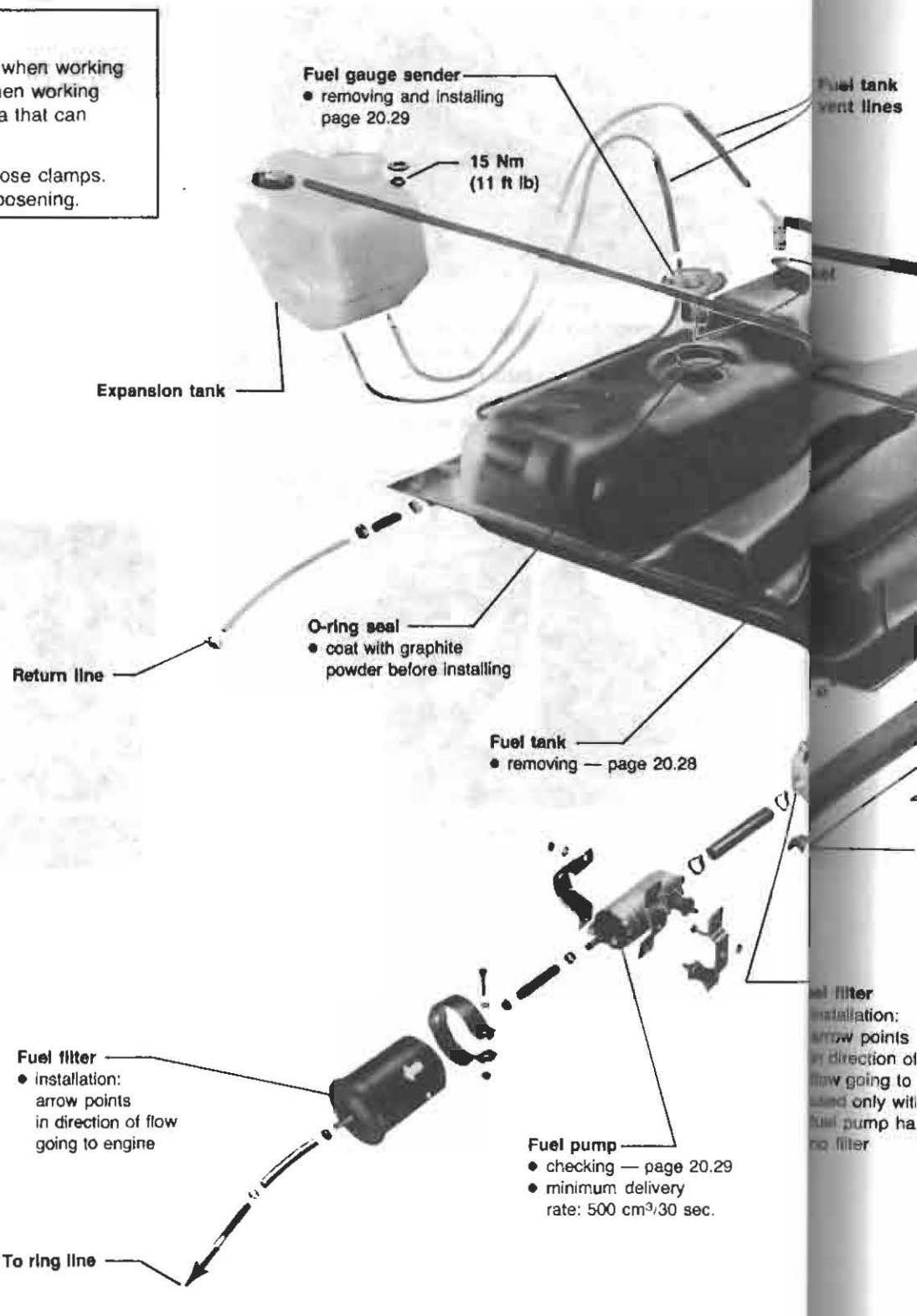

- Rules of cleanliness, 20.28
- Checking for leaks, 20.21

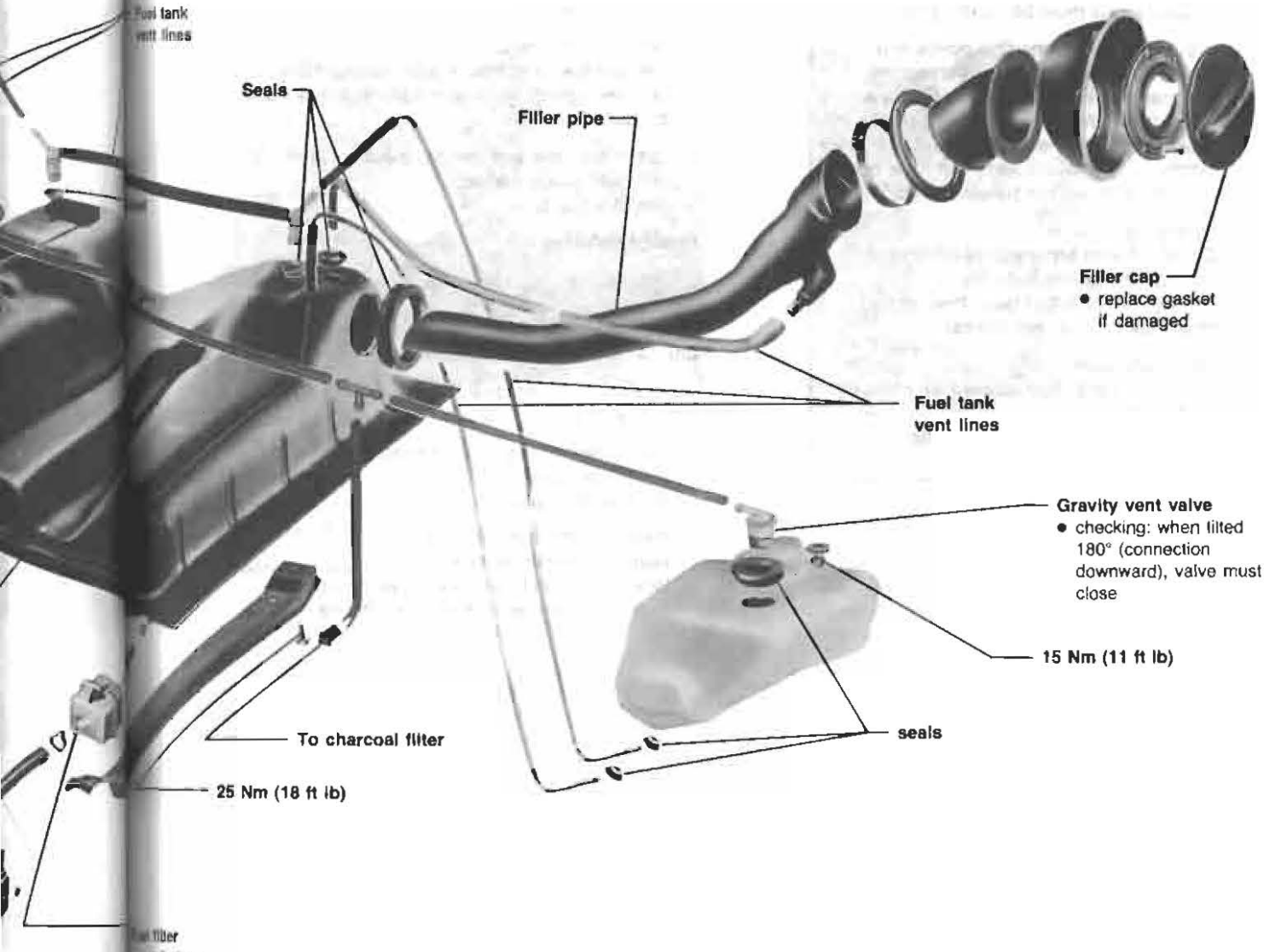

20-547

Rules of cleanliness

CAUTION

When working on the fuel system, the following rules of cleanliness must be carefully followed.

— Thoroughly clean connecting points and surrounding areas **before loosening**.
— Lay pieces that have been removed on a **clean** surface and cover them with plastic film or paper — do not use cloths with lint.
— Carefully wrap or close parts that have been opened if repair will not be completed.

— Use only **clean** parts.
- Do not unwrap replacement parts until immediately before installing.
- Do not use parts that have been stored unwrapped (i.e. in tool boxes).

— With system open:
- Avoid the use of compressed air as much as possible.
- Avoid moving vehicle as much as possible.

Fuel tank, removing

Vehicles with rear wheel drive only

— Disconnect battery ground strap
— Empty fuel tank
— Remove filler pipe

— Remove vent lines
— Remove feed and return lines from fuel tank
— Unscrew splash plate from body and take out of brackets

— Lower fuel tank and remove electrical connector from fuel gauge sender
— Remove fuel tank

Syncro vehicles

Note

Removing and installing the fuel tank is possible after removing the transmission.

For transmission removal and installation: see Repair Group 34.

— Disconnect battery ground strap
— Drain fuel tank
— Remove filler pipe

— Remove vent and fuel lines
— Remove restraining straps
— When taking out fuel tank, carefully push or secure coolant pipes and hoses to one side

Fuel gauge sender, removing and installing

Vehicles with rear wheel drive only

— remove fuel tank — page 20.28

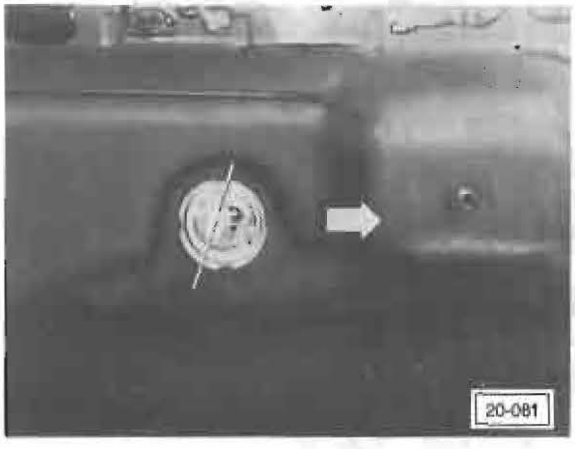

— remove and install sender with tool **2012 A**

Note

Installing: electrical connector must line up with dotted line. Arrow points in driving direction.

Syncro vehicles

— disconnect battery ground strap
— empty fuel tank until float lies below level of sender opening
— remove sender behind rear wheel house

— when installing the sender, make sure that return line is inserted into expansion tank inside of fuel tank (see Fig. 20-549, Page 20.34)

Note

After installation of sender:
Rocker arm must be able to be swung downwards.

Fuel pump delivery rate, checking

WARNING

Fire hazard! Never smoke or have anything in area that can ignite fuel.

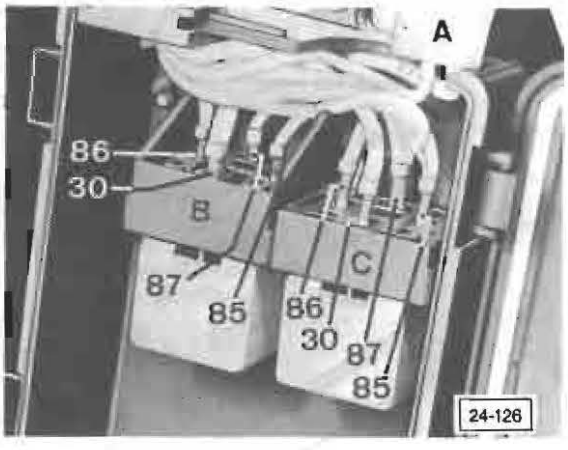

— disconnect fuel return line at pressure regulator and block line
— attach hose to return line fitting on pressure regulator and place other end of hose in one quart measuring container
— remove relay **C**
— connect terminals **30** and **87** with tester **US 4480/3**
— switch on for 30 seconds
  • minimum fuel delivery rate should be **500 cm³**

Accelerator linkage/cable
Manual transmission

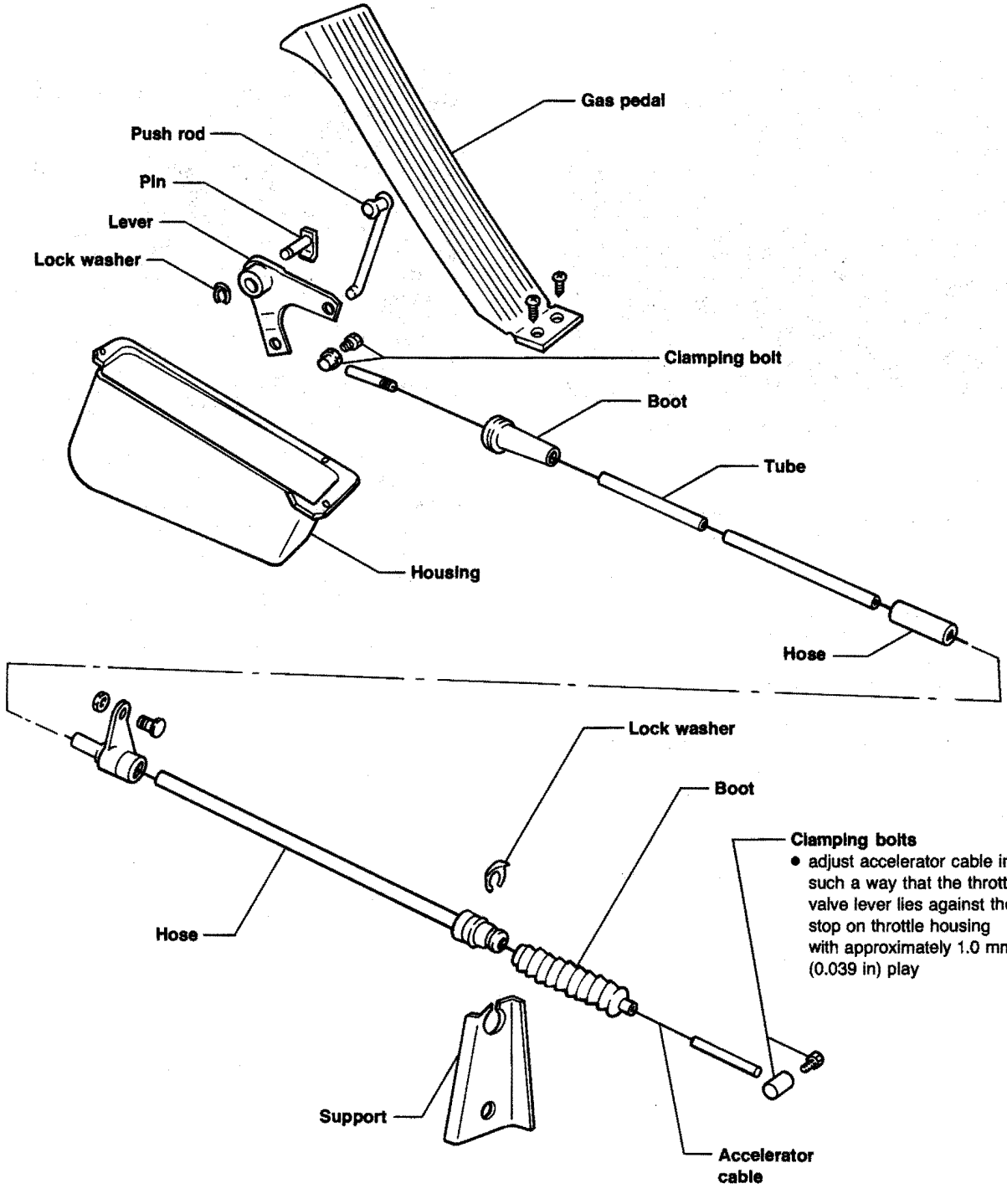

20-402

Accelerator linkage/cable
Automatic transmission

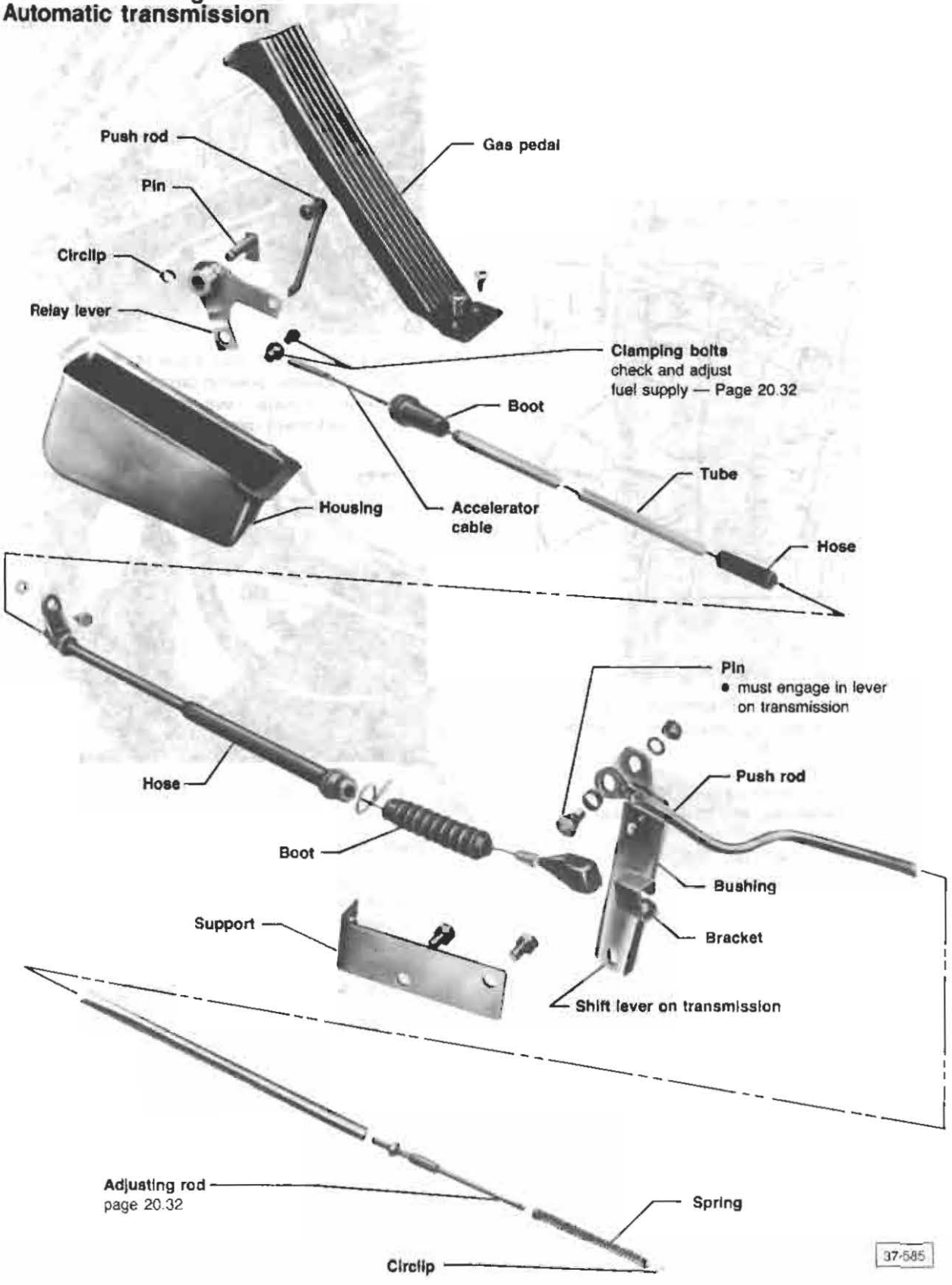

Accelerator linkage/cable, adjusting

The accelerator linkage/cable should be adjusted in such a way that with throttle valve closed, (idle), the lever on transmission is against stop in no-gas position; otherwise, shifting occurs too late in middle speed ranges.

The accelerator linkage/cable should be adjusted as follows at idle speed (engine at operating temperature, with throttle valve closed):

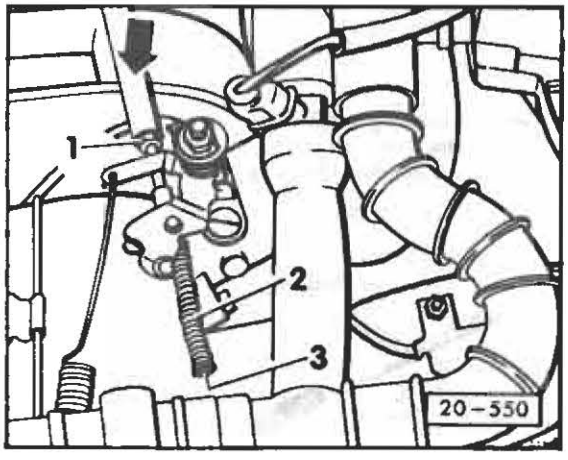

— Loosen nut (**1**)
— Remove spring (**2**)
— Pull accelerator rod in direction of arrow

— Turn adjusting rod (**3**) with screwdriver until shoulder of adjusting rod just contacts pivot of throttle lever
— Install spring (**2**)
Start engine and check to see if idle rpm is reached. If necessary, re-adjust by turning adjusting rod (**3**)
— lock adjusting rod with nut (**1**)

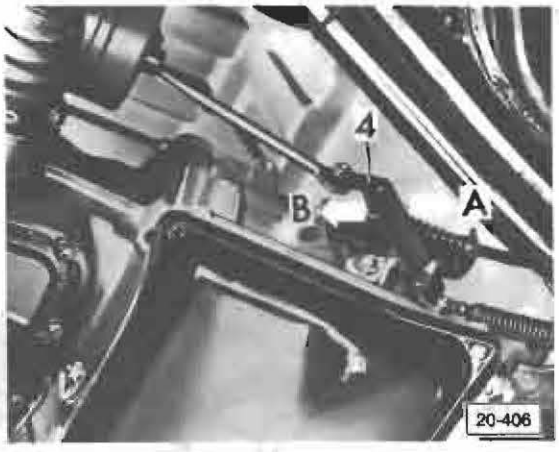

— Press gas pedal to floor. Lever (**4**) must be on stop in kickdown position (**arrow A**)
— Release gas pedal. Lever must be in idle position (out of kickdown) (**arrow B**)

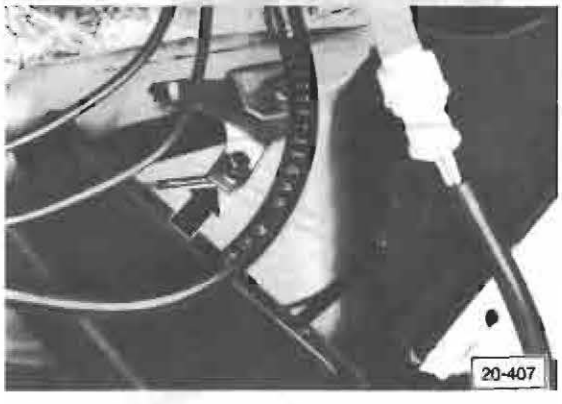

— If necessary, adjust accelerator cable at clamping bolt

Checking adjustment

— Push gas pedal down to full throttle point. Throttle valve lever must lie against stop (without kickdown)
— Push gas pedal past full throttle point to stop. Spring must be compressed. Lever on transmission must be in kickdown position (**A**).

Charcoal filter assembly

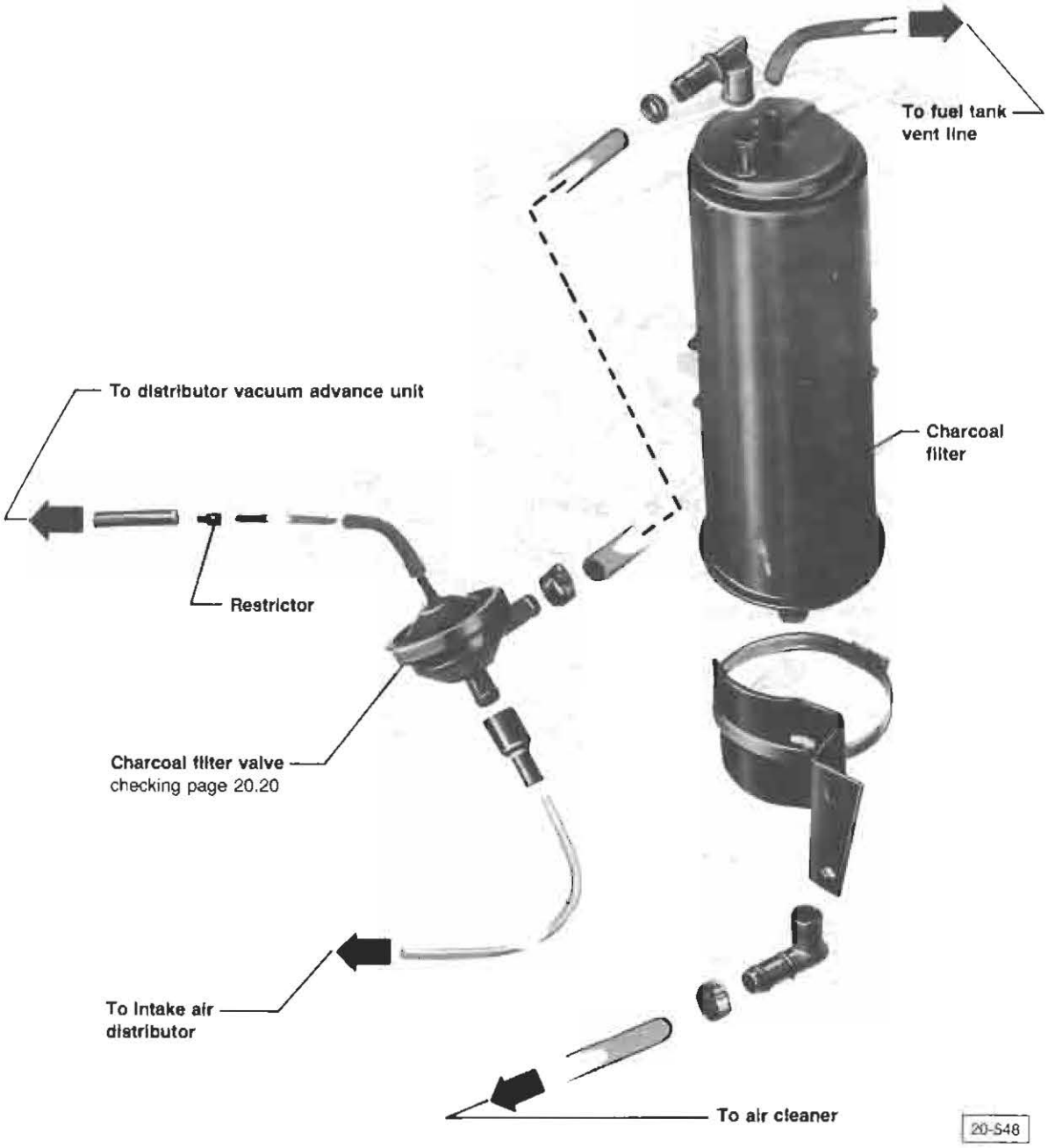

Fuel supply system, components Syncro vehicles

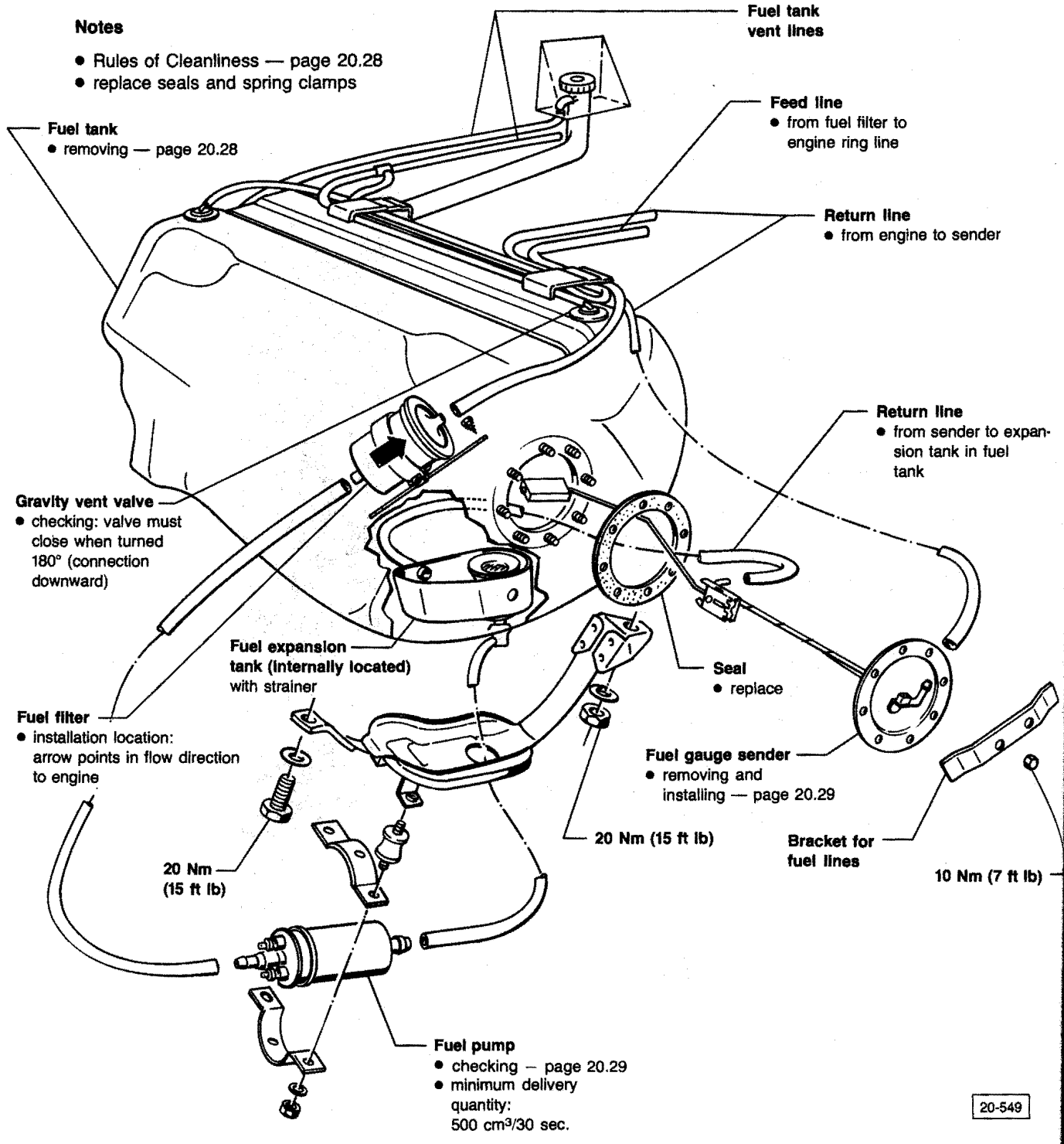

Diesel Injection System

Quick Data

Index

Diesel Injection System
—Cold start cable 23.5
—Engine speed 23.5
—Fuel cut-off solenoid 23.5
—Fuel delivery valve/ housing 23.7, 23.8
—Fuel filter water indicator kit, installing 23.10, 23.11
—Fuel injectors 23.8–23.10
—Injection pump 23.6, 23.7
—Injection pump/valve timing 23.3, 23.4
—Injection system 23.2
—Injection timing 23.4

Diesel Injection System

Quick Data

Index

Diesel Injection System
—Cold start cable 23.5
—Engine speed 23.5
—Fuel cut-off solenoid 23.5
—Fuel delivery valve/ housing 23.7, 23.8
—Fuel filter water indicator kit, installing 23.10, 23.11
—Fuel injectors 23.8–23.10
—Injection pump 23.6, 23.7
—Injection pump/valve timing 23.3, 23.4
—Injection system 23.2
—Injection timing 23.4

23 Diesel Injection System

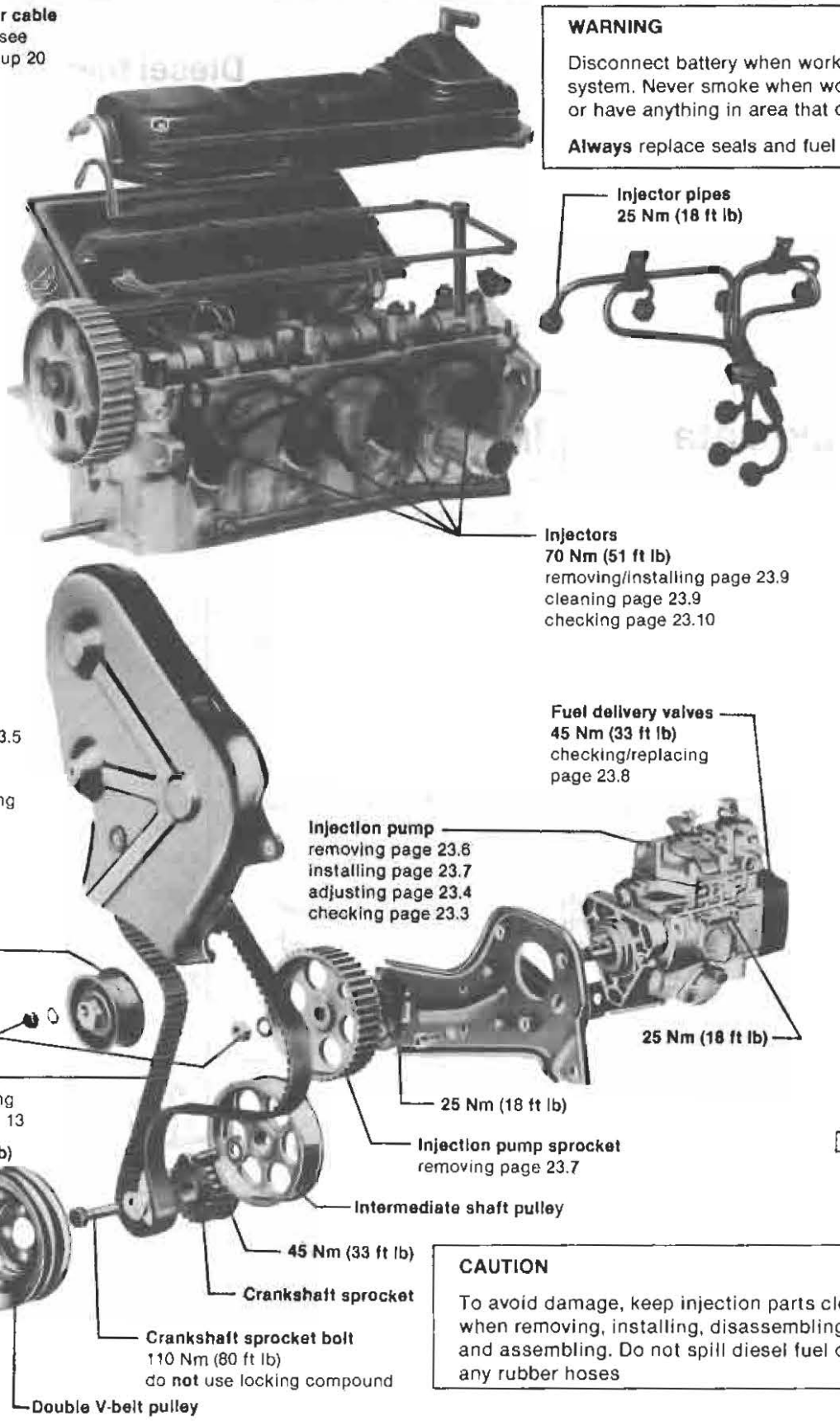

Injection pump/Valve timing, checking

Work sequence

Note

Drive belt must be checked for proper tension and be centered in sprockets before checking injection pump/valve timing

—remove cylinder head cover/drive belt cover
—rotate engine until lobes of camshaft on cylinder No. 1 point upward (TDC position)

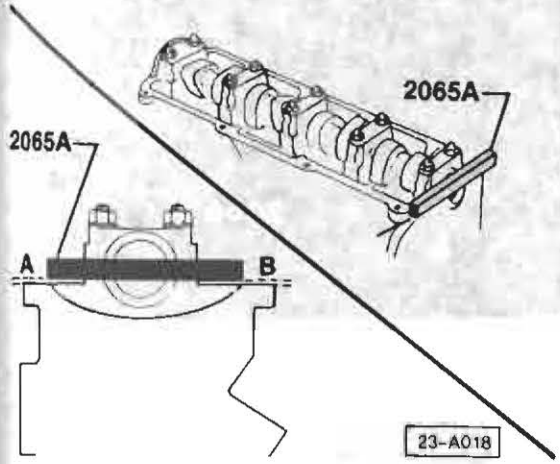

—install setting bar 2065A on cylinder head
—turn camshaft until one end of setting bar touches cylinder head
—measure gap at other end with feeler gauge

—take half of measurement and insert feeler of this thickness between bar and cylinder head at **A**
—turn camshaft so bar rests on feeler gauge
—insert second feeler gauge of same thickness between other end of bar and cylinder head at **B**



—check that marks on sprocket, pump and mounting plate (black arrow) are approximately aligned

if **YES,** pump in correct position, continue with work sequence
if **NO,** pump incorrectly positioned, adjust pump/valve timing (see page 23.4)



(engine removed)

—attach tool 2068A to crankcase
—set scale to 100 mm (arrow **A**)
—tip of scale must align with TDC mark on clutch pressure plate (arrow **B**)



(engine installed)

—check that TDC mark on clutch pressure plate is in line with boss on bell housing

if **YES,** valve timing **OK;** next check injection timing (see page 23.4)
if **NO,** valve timing incorrect, proceed as follows:

—loosen camshaft sprocket bolt 1 turn
—tap back of camshaft sprocket with rubber hammer until it is loose
—hand tighten sprocket bolt until end play is eliminated but sprocket still turns freely on camshaft

—rotate engine until TDC marks align on flywheel
—torque camshaft bolt to 45 Nm (33 ft lb)
—recheck marks
—check injection timing (see page 23.4)

Injection pump/Valve timing, adjusting

Work sequence

—remove cylinder head cover/drive belt cover
—set engine to TDC No. 1 cylinder
—lock camshaft in position with setting bar (see page 23.3)

—loosen camshaft sprocket bolt 1 turn
—tap back of camshaft sprocket with rubber hammer until it is loose
- hand tighten sprocket bolt until end play is eliminated but sprocket still turns freely on camshaft

—loosen belt tensioner
—remove belt from injection pump sprocket



—turn pump sprocket until marks on sprocket, pump and mounting plate are in line
—lock pump sprocket with pin 2064
—reinstall drive belt



—tighten camshaft bolt to 45 Nm (33 ft lb) and remove setting bar
—remove lock pin from pump sprocket
—install belt tension gauge VW 210

—tension drive belt by turning tensioner clockwise
- reading on belt tensioner = 12–13 (measured between camshaft sprocket and pump sprocket)

—lock tensioner
—turn crankshaft 2 complete turns and recheck belt tension
- eliminate play in drive belt by striking once, between camshaft and pump sprockets, with rubber hammer

—recheck valve timing
—check injection timing

Injection timing, checking/adjusting

Work sequence

> **CAUTION**
> Push in cold start device completely when checking or adjusting injection timing

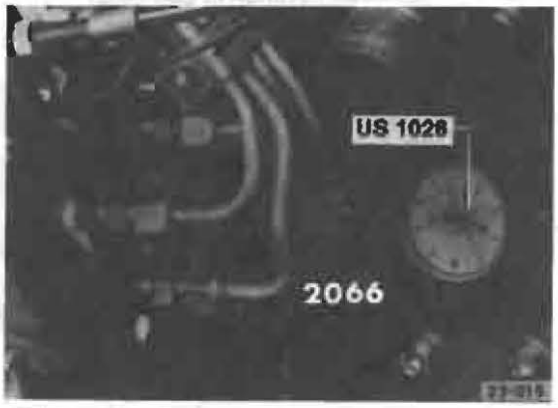

—remove center plug from injection pump cover
—install adaptor and dial gauge 0 to 3 mm (0 to 0.118 in.) in place of plug and preload gauge to approx. 2.5 mm (0.097 in.)
—turn engine slowly counterclockwise (opposite to normal rotation) until dial gauge needle stops moving

—zero gauge
—turn engine clockwise until TDC mark on clutch pressure is aligned with boss on bell housing
—check that gauge reads 0.78–0.88 mm

—if necessary, loosen upper bolts on mounting plate and bolt of rear support
—set lift by turning pump until gauge reads 0.86 ± 0.02 mm
—tighten pump mounting bolts and recheck injection timing



Tightening torque of the Diesel Injection pump center plug (arrow) is:

- 17±3 Nm (12±2 ft lb) with copper seal (reddish-brown in color)
- 22±2 Nm (16±2 ft lb) with bronze seal (yellow-brown in color)

CAUTION

To avoid fuel leaks, always replace seal for center plug (arrow)

Engine speed, checking/adjusting

Work sequence

—start engine and warm up
—place engine RPM sensor US 1324 on cylinder head cover and attach to battery
—install positive lead of VAG 1367 to US 1324

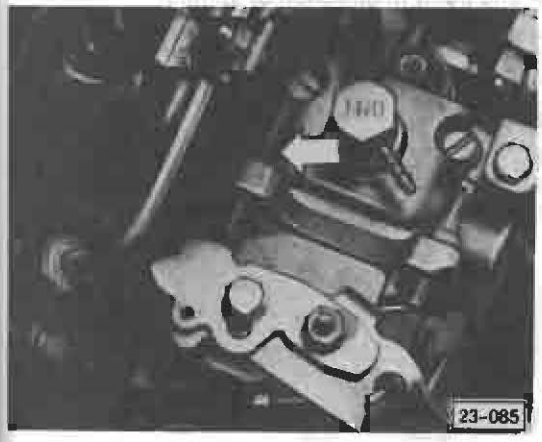

—check that idle speed is 800–850 RPM
• oil temperature 60°C (140°F)
if NO
—loosen locknut (arrow)
—adjust idle speed screw
• turning clockwise increases RPM
—tighten locknut

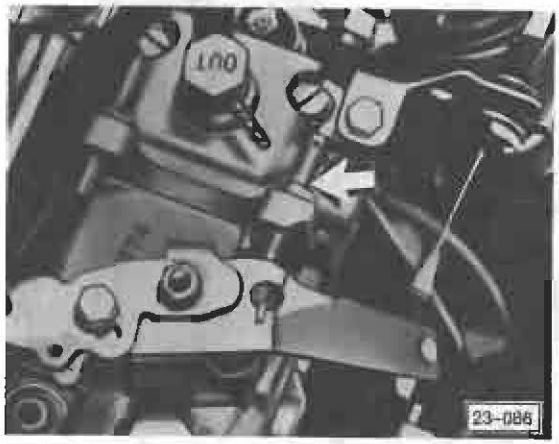

—check that maximum speed is 4800 ± 50 RPM
if NO
—loosen locknut (arrow)
—adjust maximum speed screw
• turning clockwise decreases RPM
—tighten locknut

Cold-start cable, adjusting

Work sequence

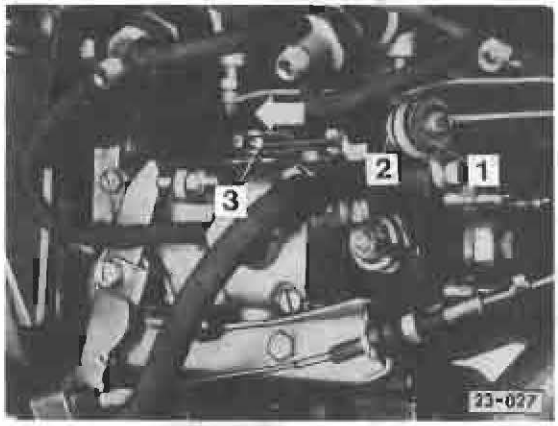

—insert washer 1 onto cable
—install cable in bracket with rubber bushing and insert inner cable into pin 3
—install horseshoe lock clip 2

—push in cold-start knob fully
—move lever to stop in direction of arrow
—pull inner cable tight and secure pin 3 with clamping screw

WARNING

Disconnect battery when working on fuel system. Never smoke when working with fuel or have anything in area that can ignite it.

Always replace seals and fuel hose clamps.

Fuel cut-off solenoid, testing

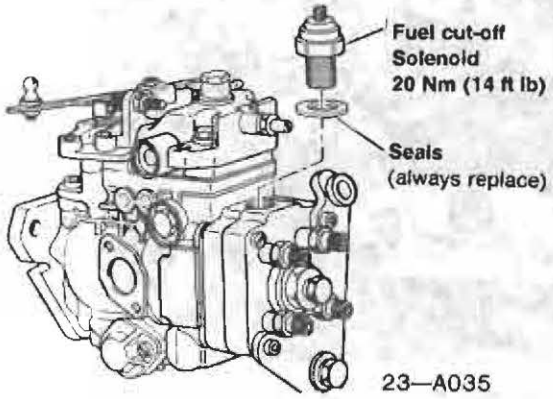

The following test procedure must be performed **before** replacement of fuel cut-off solenoid:

— Clean surrounding area and remove fuel cut-off solenoid from injection pump
— Inspect solenoid plunger and seat for foreign matter
— Clean solenoid plunger and check for free movement in solenoid
— Clean solenoid mounting surfaces
— Reinstall fuel cut-off solenoid using new seal and tighten to 20 Nm (14 ft lb)
— Check for proper operation

Injection pump, removing

Work sequence

> **CAUTION**
>
> When working on injection system, everything must be kept extremely clean. Wipe pipe unions clean beore loosening

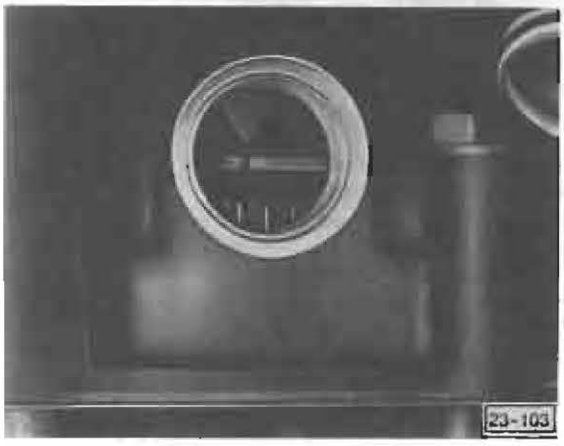

—turn engine until TDC mark on clutch pressure plate is in line with boss on bell housing
—disconnect battery ground strap

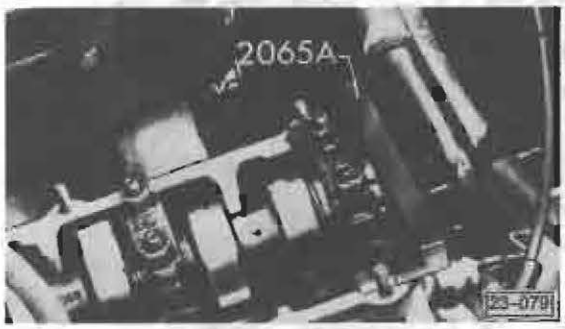

—remove cylinder head cover
—lock camshaft with setting bar
—remove drive belt
—loosen injection pump sprocket retaining nut slightly

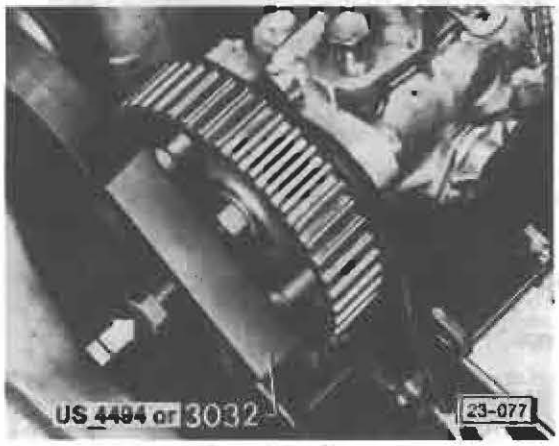

—attach puller so jaws are at right angles to cross bar and point in direction of spindle rotation
—carefully apply tension with puller

> **CAUTION**
>
> Never apply excessive tension with puller. as this may damage sprocket

—hit puller spindle head (arrow) with light hammer taps until sprocket loosens from injection pump shaft taper
—remove puller and nut
—remove sprocket by hand

—detach all fuel pipes from pump. Cover unions with clean cloth
—disconnect wire from fuel shutoff solenoid on injection pump and detach accelerator and cold start cables



—remove three bolts from injection pump mounting plate **2**

CAUTION

To avoid damage to distributor plunger, **do not** loosen bolts (arrows) on fuel distributor head

—remove bolt **1** from rear support and remove pump

Injection pump, installing

Work sequence

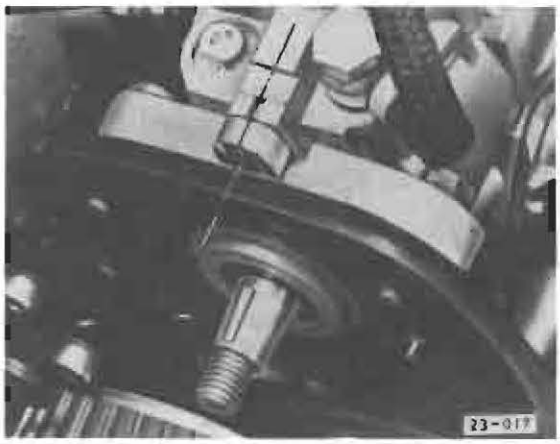

—install pump, align marks on pump and mounting plate. Install pump sprocket

Tightening torques

• Pump bolts	25 Nm (18 ft lb)
• Fuel pipes	25 Nm (18 ft lb)
• Pump sprocket	45 Nm (33 ft lb)



CAUTION

Do not interchange fuel supply (arrow **A**) and return (arrow **B**) pipe union screws. For identification, fuel return pipe union screw is marked **OUT** on hex. head

—adjust injection pump/valve timing (see page 23.4)
—adjust injection timing (see page 23.4)

Fuel delivery valves, checking

Work sequence

Note

Fuel leaks from fuel delivery valves are usually caused by improper removal of injector pipes. If fuel delivery valve leaks proceed as follows:



—remove injector pipes
—retorque fuel delivery valves (arrows) to 45 Nm (33 ft lb)
—reinstall injector pipes and tighten to 25 Nm (18 ft lb)
—start engine and check for leaks
  • if fuel leak did not stop replace fuel delivery valve housing and seal

Fuel delivery valve housing, replacing

Work sequence

CAUTION

When removing or replacing fuel delivery valves, do not interchange valve assemblies

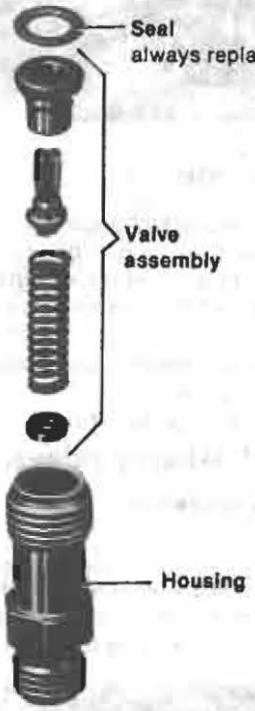

—clean all injector pipe fittings
—remove injector pipes
—remove fuel delivery valve

—transfer valve assembly to new housing
—install fuel delivery valve, with new seal and tighten to 45 Nm (33 ft lb)
—reinstall injector pipes and tighten to 25 Nm (18 ft lb)
—start engine and check for leaks

Fuel injectors, removing/installing

Work sequence

Note

First signs of injector trouble usually appear as follows:

- knocking in one or more cylinders
- engine overheating
- loss of power
- smoky black exhaust
- increased fuel consumption

Faulty injectors can be located by loosening pipe union on each injector in turn with engine at fast idle. If engine speed remains constant after loosening a pipe union, this indicates a faulty injector

Removing

CAUTION

To avoid damage, keep injection parts clean when removing, installing, disassembling and assembling

—clean all injector pipe fittings
—remove injector pipes
—disconnect fuel return hoses
—remove injectors using US 2775 or equivalent
—remove heat shields and discard

Installing



—install new heat shields as shown
—install injectors and tighten to 70 Nm (51 ft lb)
—install injector pipes and tighten to 25 Nm (18 ft lb)

—reconnect fuel return hoses
—start engine and accelerate a few times to clear air bubbles
—check for leaks

Fuel injectors, checking

Work sequence

> **WARNING**
>
> Diesel fuel will penetrate skin if hands are exposed to working pressure of injector spray

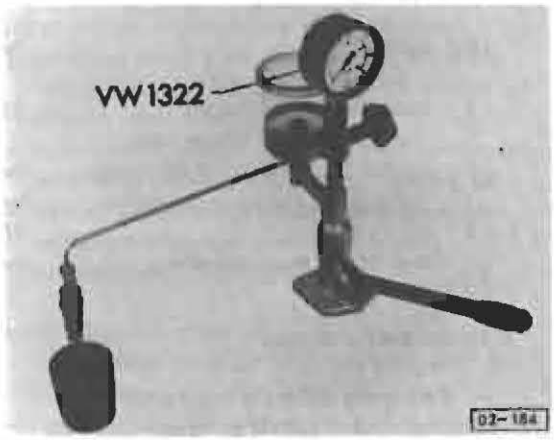

—test injectors with US 1111

Spray test

—fill tester container with clean diesel fuel
—attach injector to tester
—pump tester a few times to clear air bubbles

—turn valve on tester so pressure gauge is **OFF**
—pump tester with rapid short strokes (4 to 6 strokes per sec.)
- spray should be even, well atomized and stop cleanly
- injector must not drip

Opening pressure test

—turn valve on tester so pressure gauge is **ON**
—press pump lever down slowly
—note opening pressure when injector sprays
- used injectors = 120 to 130 bar (1740 to 1885 psi)
- new injectors = 130-138 bar (1885-2001 psi)

if **NO**—continue as follows

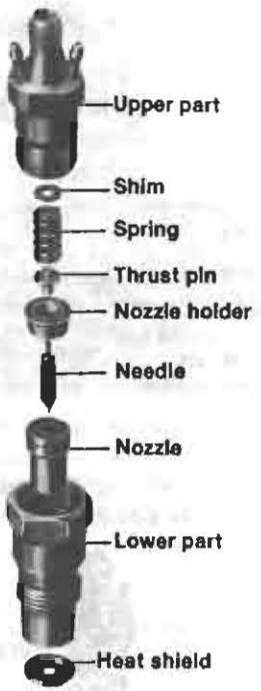

—remove injector from tester and disassemble
—remove shim and measure
—select proper shim
- thicker shim increases pressure
- a change in thickness of 0.05 mm (0.0019 in.) changes pressure approximately 5 bar (72 psi)
- shims are available from 1 to 1.95 mm (0.039-0.070 in.) in steps of 0.05 mm (0.0019 in.)

—reassemble injector and retest until correct opening pressure is reached

Note

When servicing used injectors, set opening pressure to value for new injectors

Leakage test

—pressure gauge still **ON**
—press pump lever down slowly
—hold pressure at approximately 110 bar (1595 psi) for 10 seconds
- fuel should not drip from injector at nozzle

Note

All **new** and **rebuilt** injectors have a settling effect of approx. **5 bar**. When installing new/rebuilt injectors, they must have a 5 bar higher opening pressure.

Fuel injectors, cleaning

Work sequence

> **CAUTION**
>
> Disassemble and clean one injector at a time. Effectiveness of injectors will change if parts from other injectors are interchanged

—clamp upper part of injector in vise and loosen lower part
—turn injector over, lightly clamp lower part of injector in vise and disassemble

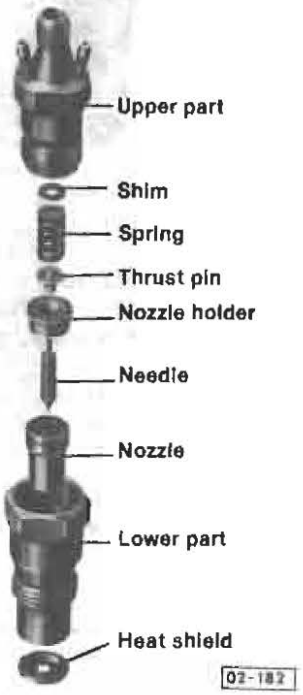

—clean parts of injectors in clean diesel fuel
- gasoline may be used to clean carbon deposits but part must be rinsed in diesel fuel immediately

—visually check injector parts for
- damaged, carbonized or rough needle seat
- worn or damaged injection needle and nozzle
- needle binding in nozzle

—reassemble injector and tighten halves to 70 Nm (51 ft lb)

Fuel filter water indicator kit, installing

Water level indicator light will light when it is necessary to drain water from trap in fuel filter

Parts required

Qty	Description	Part No.
1	water level indicator kit	175 998
1	"double" (single female into double male) electrical connector	local sup
1	"ring type" electrical connector	local sup
1	grommet	171 971
	blue 18 ga. electrical wire	local sup

Installation procedure

– disconnect battery ground cable
– drop down Fuse/Relay Panel

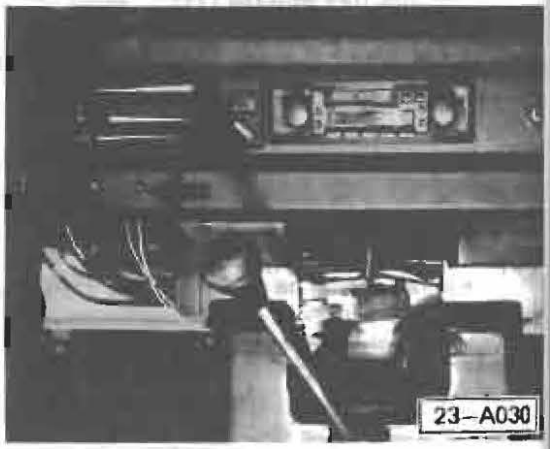

– remove trim cover from front of floor duct

Mount control unit as follows:
- mount retaining clip (included in Kit) to fresh air tube with sheet metal screw (included in Kit) so control unit will clip into position shown in photo
- also attach brown ground wire (included in Kit) under mounting screw with "ring type" connector
- install double connector on terminal **15** of control unit and clip unit in place
- connect ground wire from mounting screw to terminal **31** of control unit

Install and connect indicator light as follows:
- mark and drill a 9 mm hole approx. 50 mm to right of cold start cable and mount indicator light
- connect white wire (included in Kit) to light
- route wire to control unit and attach to one male terminal of double connector on terminal **15**
- connect yellow wire (included in Kit) to light
- route wire to control unit and attach to terminal **31b**

Install and connect water sensor as follows:
- replace water drain-screw in fuel filter with drain-screw/sensor, included in Kit
- connect blue wire (included in Kit) to terminal **A** of control unit

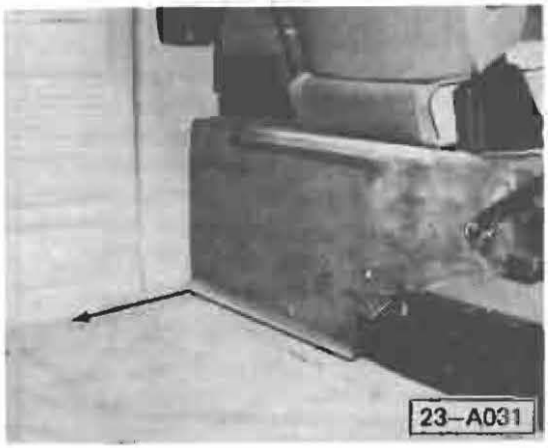

- route wire under left side of floor vent, between handbrake and left seat base. Continue around back of left seat base under carpeting and to rear along left side of passenger compartment under carpeting

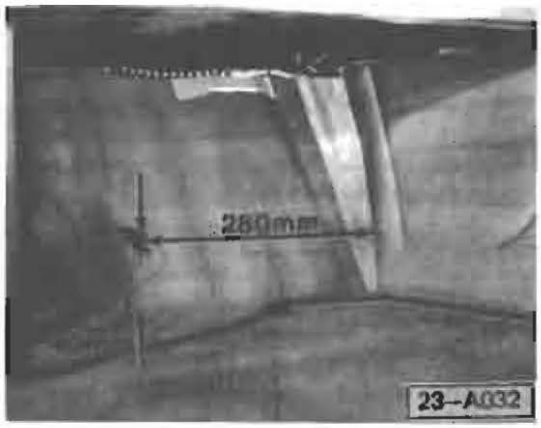

- continue to route wire under carpeting under left side of rear seat
- route wire out from under carpeting where shown

Note
Blue wire provided is too short and must be lengthened to reach fuel filter in engine compartment

- mark and drill a 13 mm hole at location shown in rear panel under back seat
- insert grommet in hole and route wire through to left rear wheel well area
- from wheel well, carefully route wire across vehicle above transmission, and then back to fuel filter

- connect wire to terminal on new drain-screw/sensor
- connect black wire (included in Kit) to remaining male terminal of double connector on terminal **15** of control unit
- route wire to rear of Fuse/Relay Panel and connect to fused side of fuse **12**

- reinstall Fuse/Relay Panel
- reinstall trim cover for floor duct
- reconnect battery ground cable
- test system by switching ignition on and grounding blue wire from sensor on fuel filter casing. Light should come on and remain on until ignition is switched off

Suggested Installation Time: 125 T.U.
Labor Operation: 20 34 31 0

Fuel Injection, AFC System

Index

Air-cooled AFC
— Air filter housing 24.8
— AFC system check 24.15
— Auxiliary air regulator 24.8, 24.9
— Cold-start valve 24.5
— Control unit/wiring harness 24.12
— Deceleration valve 24.7
— Double relay 24.13
— Full throttle enrichment switch 24.13, 24.14
— Idle speed-CO 24.10, 24.11
— Intake air/temperature sensors 24.9
— Intake air sensor housing 24.8
— Injector resistance 24.6
— Injector spray pattern/leak checking 24.7
— Oxygen sensor/wiring 24.16
— Pressure regulator 24.5
— Speed limit switch 24.14
— System components 24.2
California 24.4
USA and Canada, except Calif. 24.3
— Temperature sensor II 24.13
— Thermo-time switch 24.6
— Voltage supply/series resistance 24.6

Water-cooled Digijet
— Air filter housing 24.27
— Auxiliary air regulator 24.27, 24.28
— Control unit/wire harness 24.31
checking 24.35
— Data/specifications 24.18, 24.19
— Double relay 24.32
— Fuel injectors 24.25, 24.26
troubleshooting 24.38-24.41
— Full throttle enrichment switch 24.34
checking/adjusting 24.35-24.37
— Idle speed/CO, checking/adjusting 24.29, 24.30
— Intake air sensor 24.28
housing 24.27
— Pressure regulator 24.25
— System check 24.20, 24.21
— System components 24.22-24.24b
early version 24.24
late version 24.24a 24.24b
— Temperature sensor I 24.28
— Temperature sensor II 24.32
— Throttle valve/deceleration/idle switch 24.33

Water-cooled Digifant
— Deceleration fuel shutoff 24.60
— Electrical testing 24.61, 24.62
— Fuel injectors, checking 24.56
— Fuel injection system components 24.48, 24.49
repairing 24.46, 24.47
— Full throttle enrichment, checking 24.60
— Idle speed/CO content checking and adjusting 24.50-24.52
— Idle stabilizer, checking 24.53
— Intake air sensor, checking 24.57
— Oxygen sensor, checking 24.54
— Pressure regulator, checking 24.55
— Residual pressure, checking 24.55
— Safety precautions 24.42
— Technical Data 24.43-24.45
— Throttle valve basic adjustment 24.37
— Throttle valve switch 24.58, 24.59

CAUTION

During repairs always replace gaskets, seals and clamps

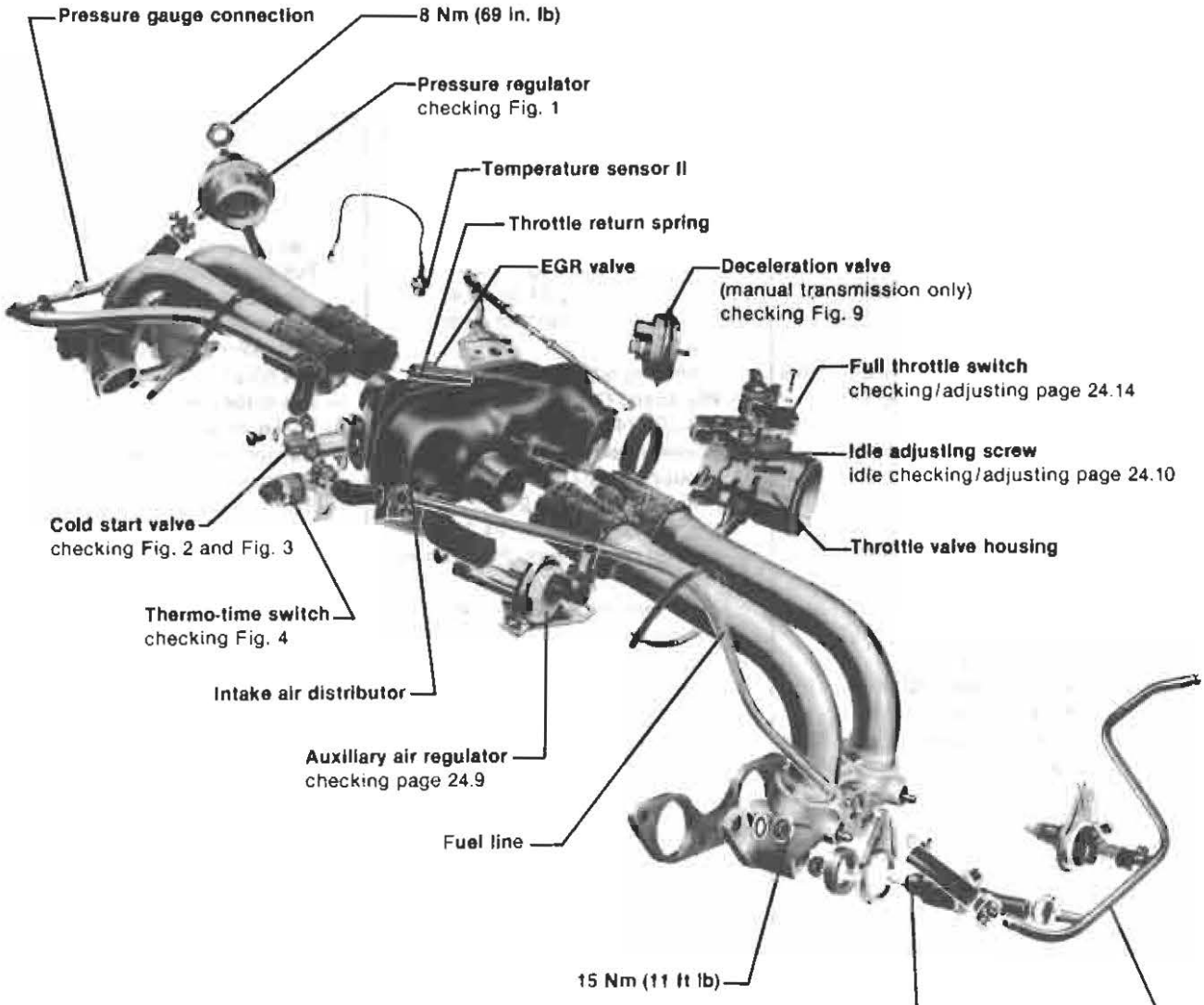

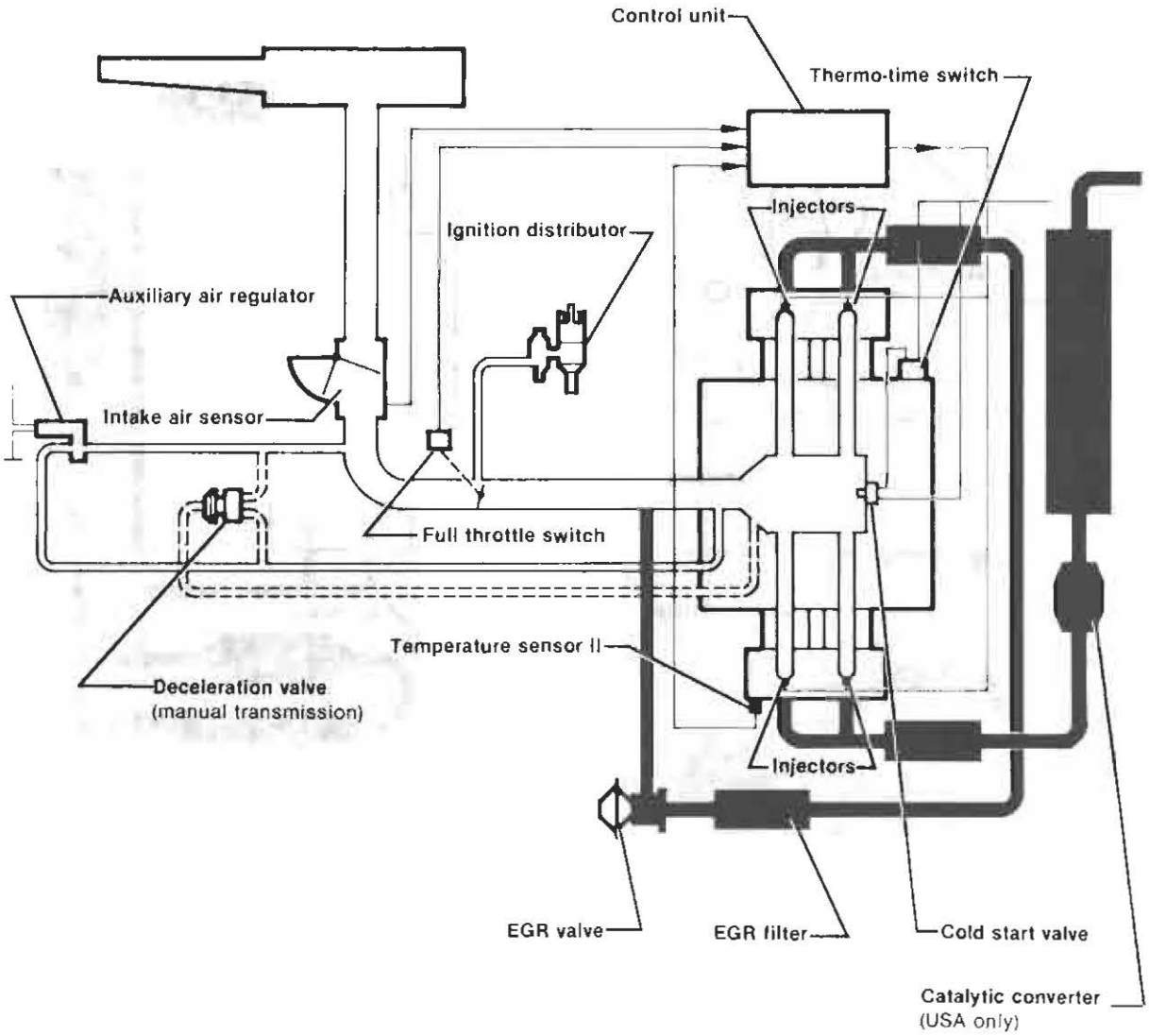

24-104

Canada and USA except Calif. | Air-cooled AFC

System component layout **24.3**

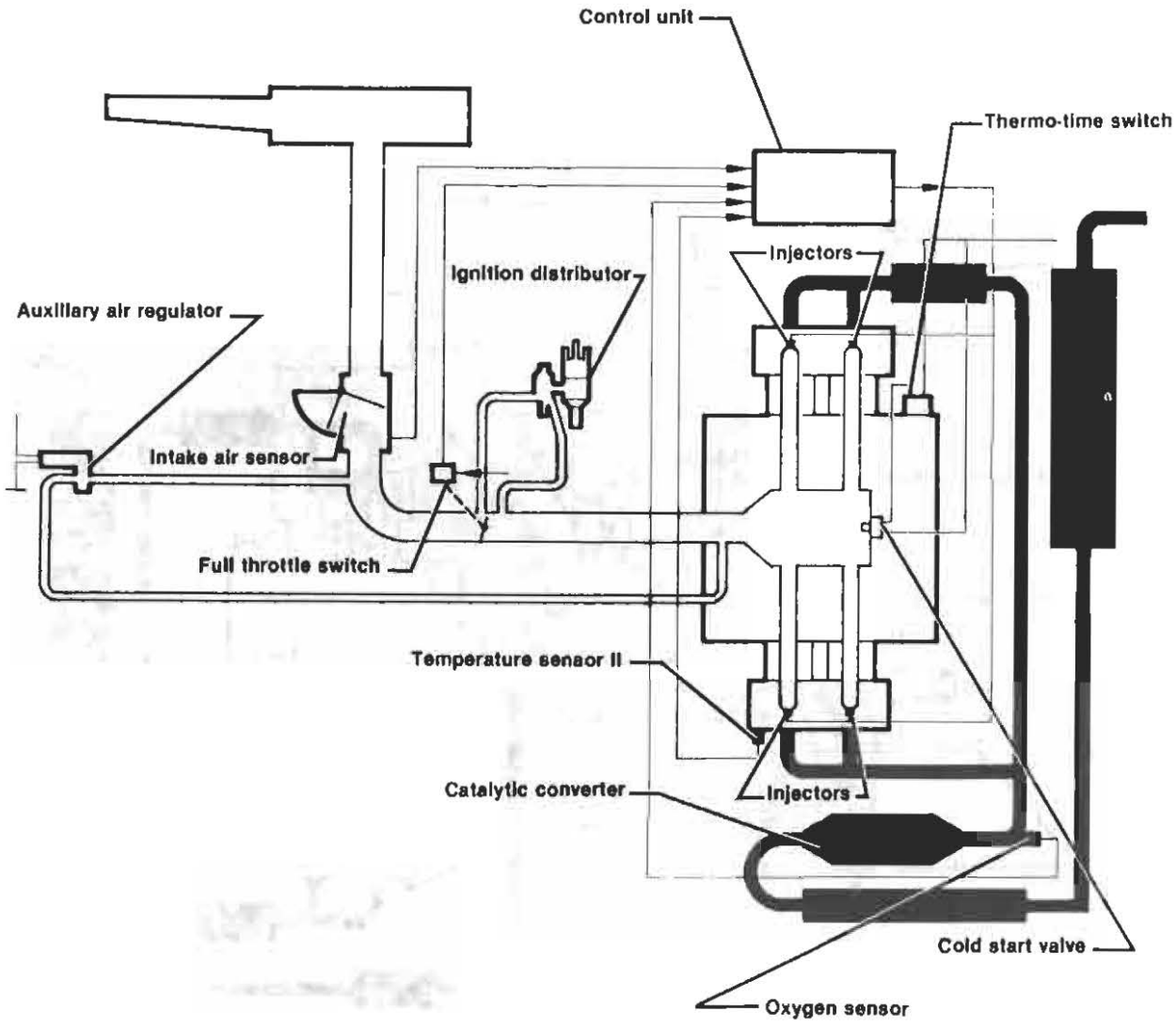
Control unit
Thermo-time switch
Injectors
Ignition distributor
Auxiliary air regulator
Intake air sensor
Full throttle switch
Temperature senaor II
Catalytic converter
Injectors
Cold start valve
Oxygen sensor

24-105

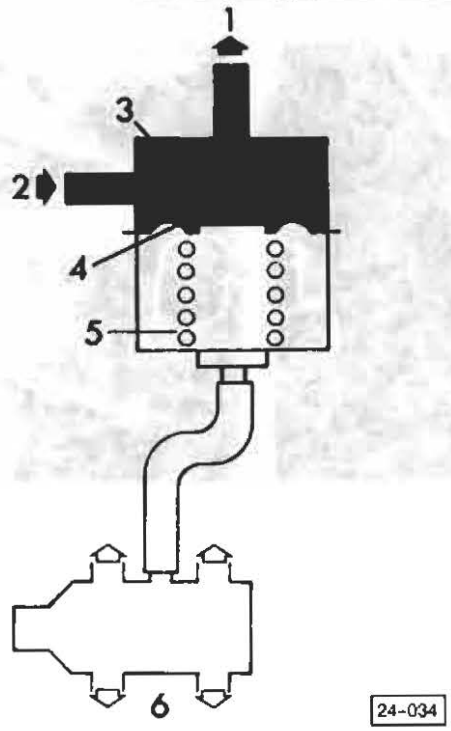

Fig. 1 **Pressure regulator, checking**

1 = return line
2 = from fuel pump
3 = fuel pressure chamber
4 = diaphragm
5 = spring
6 = intake air distributor

Note

Pressure regulator controls fuel pressure depending on intake air distributor vacuum

WARNING

Fire hazard. Do not smoke or have anything in area that can ignite fuel

— connect gauge US 1076 to fuel ring main
— disconnect hose between intake air distributor and pressure regulator
— start engine and run at idle
• pressure should be: 2.5 bar (36 psi)

— re-connect hose
• pressure (at idle) must drop to approx. 2.0 bar (29 psi)

If pressure too low, check fuel pump delivery rate
if pressure too high, check return line
If readings still incorrect, replace pressure regulator

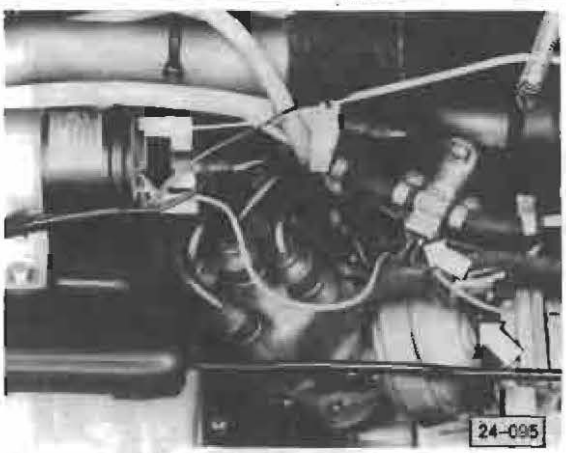

Fig. 2 **Cold start valve, checking**

WARNING

Fire hazard. Do not smoke or have anything in area that can ignite fuel

— connect gauge US 1076 to fuel ring main
— operate starter briefly until fuel pressure is present
— pull electrical connector off cold-start valve
— operate valve with two jumper wires (arrows)
• fuel pressure should drop slowly

if **NO**, replace cold start valve



Fig. 3 **Cold start valve, checking for leaks**

— pull electrical connector off cold start valve
— remove cold start valve from intake air distributor but leave valve connected to ring main
— pull wire off ignition coil terminal 1
— operate starter
• cold-start valve should not leak. Replace if necessary

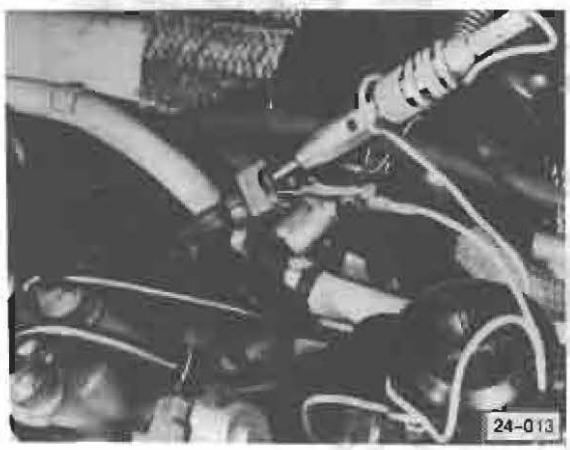

Fig. 4 Thermo-time switch, checking

- engine cold, air temperature below 20 °C (68 °F)

— pull electrical connector off cold-start valve
— connect test light
— pull wire off ignition coil terminal 1
— operate starter
- test light must light up brightly
- after 11 seconds (maximum) test light must dim or go off

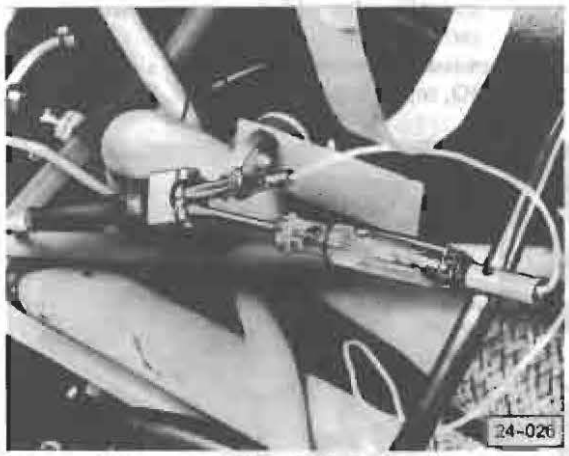

Fig. 5 Voltage supply at injectors, checking

— remove connector from injector
— connect test light to wire connector
— operate starter, test light must flicker
if **NO**, refer to page 24.38

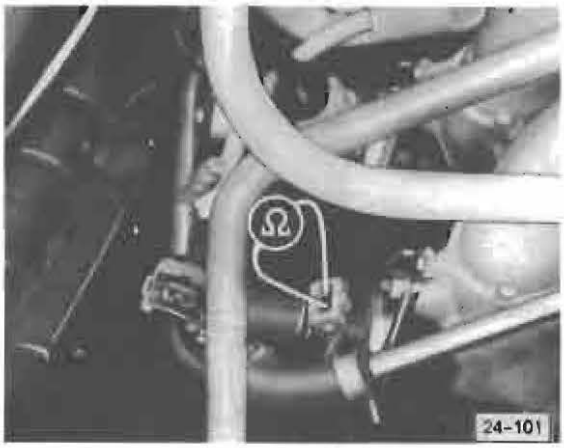

Fig. 6 Injector resistance, checking

— pull connector off injector and connect ohmmeter to injector
- resistance should be 2-3 ohms

if **NO**, replace injector

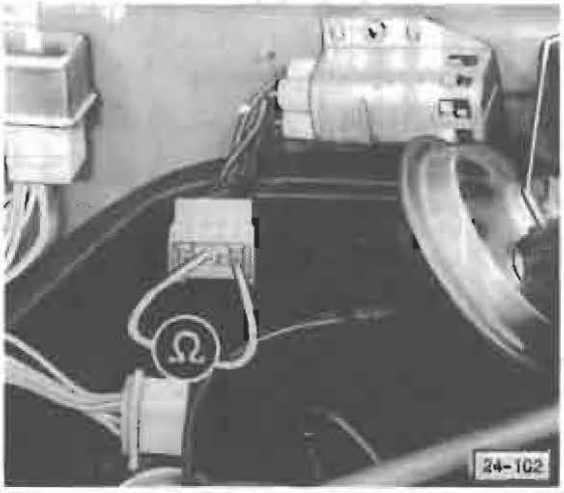

Fig. 7 Series resistance, checking
(USA and Canada except Calif.)

— disconnect connector to series resistance
— connect ohmmeter with one lead to center pin of connector and touch other lead to each side pin
- resistance for each must be 5.5-6.5 ohms

if **NO**, replace series resistance as complete unit

Note

On California vehicles, series resistance is built into fuel injection control unit and can not be checked

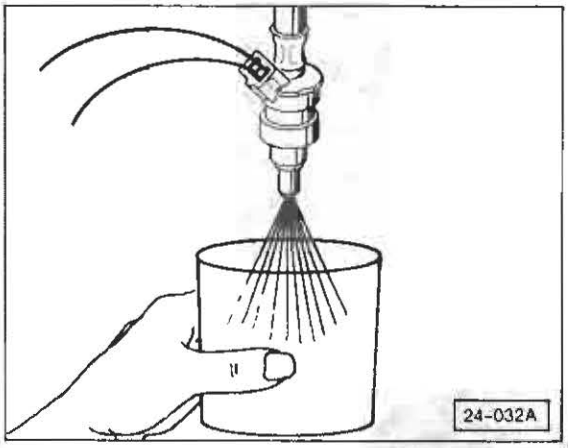

Fig. 8 **Injector spray pattern, checking**

— remove injector but leave connected to ring main

WARNING

Fire hazard. Do not smoke or have anything in area that can ignite fuel

— operate starter briefly
- spray pattern must be an even, cone-shaped spray



Fig. 9 **Deceleration valve, checking (manual transmission only)**

— pull off hose from deceleration valve to air filter at filter
— start engine and run briefly at approx. 3000 rpm
— let throttle valve snap closed
— at same moment check for suction at disconnected hose

if **NO**, replace deceleration valve

Injectors, checking for leaks

— remove electrical connector from injector
— remove injector but leave connected to ring main line
— pull off wire from terminal 1 of ignition coil
— operate starter briefly
— check that no more than 2 drops leak from each injector in one minute

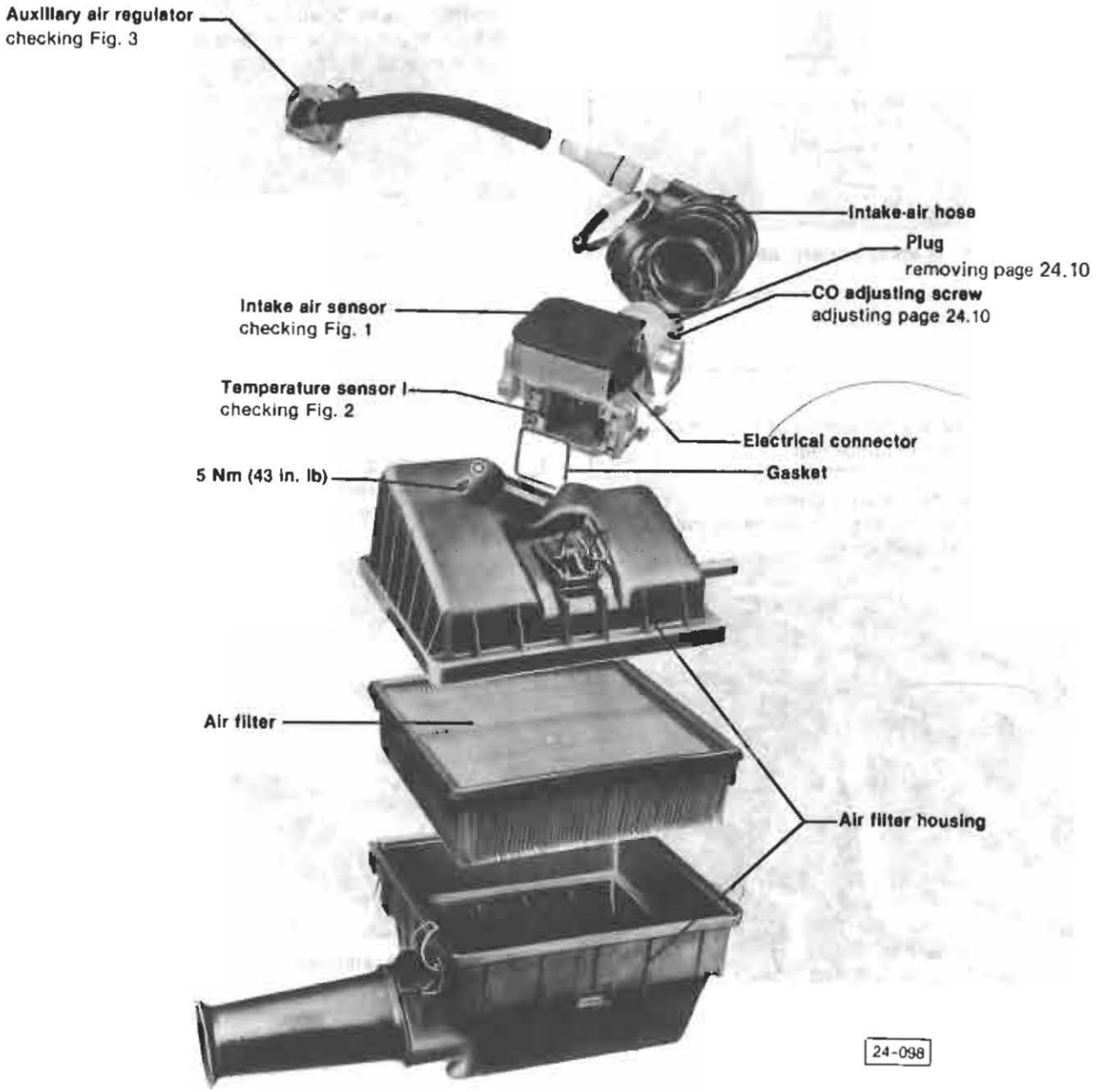
Auxiliary air regulator
checking Fig. 3
Intake-air hose
Plug
removing page 24.10
CO adjusting screw
adjusting page 24.10
Intake air sensor
checking Fig. 1
Temperature sensor I
checking Fig. 2
Electrical connector
5 Nm (43 in. lb)
Gasket
Air filter
Air filter housing
24-098

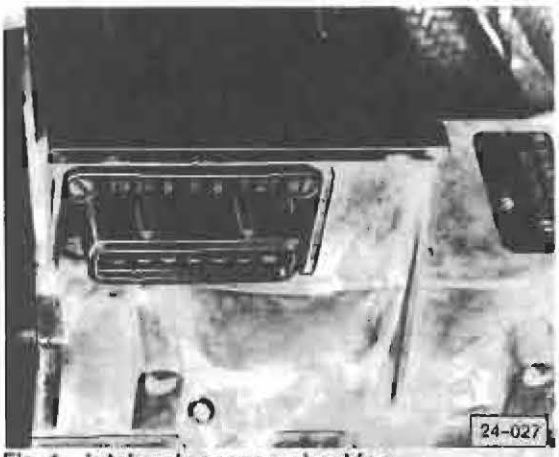

Fig. 1 Intake air sensor, checking

— pull off electrical connector from intake air sensor
— check fuel pump contacts in intake air sensor by connecting ohmmeter to terminals 36 and 39
— push air sensor flap open fully
  • meter should read 0 ohms
— release air sensor flap
  • meter should read ∞ ohms

Note

If resistance specifications are correct but fuel pump does not work, check for break in wiring between control unit and intake air sensor

— touch probes to following pairs of air sensor connections (flap closed, room temperature)
  • 6 & 9 = 200-400 ohms
  • 6 & 8 = 130-260 ohms
  • 8 & 9 = 70-140 ohms
  • 6 & 7* = 40-300 ohms
  • 7 & 8* = 100-500 ohms
  • 6 & 27 if applicable = max. 2,800 ohms at 20 °C (68 °F)

*To check that resistance strip in intake air sensor is not burnt, proceed as follows:

— check intake air sensor plate is in closed position
— connect ohmmeter to terminals 7 & 8 and open air sensor plate slowly.
  • resistance should not be lower than 40 ohm and not above 500 ohms of values
— repeat on terminals 6 & 7



Fig. 2 Temperature sensor, checking

— check that intake air sensor (arrow) has reached room temperature of 20 °C (68 °F) before checking
— connect ohmmeter to terminals 6 and 27
  • meter should read 2300-2700 ohms

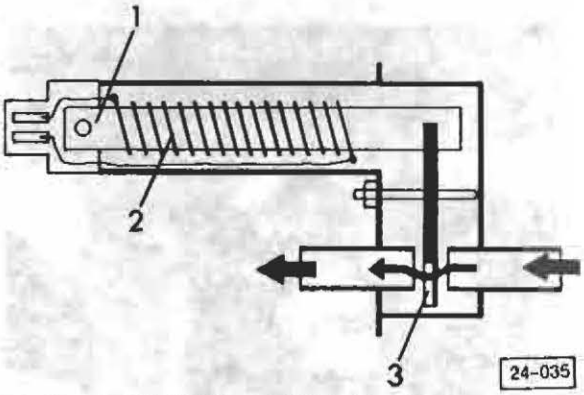

Fig. 3 Auxiliary air regulator, checking

Note

When engine is cold, regulator is open fully, allowing additional air to engine

1 = bimetal spring
2 = heating coil
3 = rotary gate valve

— check regulator electrically by pulling connector off and attaching ohmmeter to both terminals
  • meter should read approx. 30 ohms
— check mechanically by pulling off both hoses and blowing into regulator
  • with engine cold, regulator must be open
  • with engine warm, regulator must be closed
— turn ignition **ON**
  • after 5 minutes, regulator must close

Idle speed/CO, checking/adjusting
(USA and Canada except Calif.)

Work sequence

Preliminary conditions:

- engine oil temperature min. 60 °C (140 °F)
- intake air sensor must be 20 °C (68 °F)
- all electrical equipment must be **OFF**
- hose for charcoal filter must be disconnected and blocked at air filter
- dwell and timing OK (see Repair Group 28)

Note

When vehicle has been parked outside at temperatures below 10 °C (50 °F), adjustment must wait until intake air sensor has reached room temperature 20 °C (68 °F)

— connect tach/dwell meter according to manufacturer's instructions



— check idle speed and adjust if necessary, with adjusting screw (arrow)
  - manual transmission: 800–950 rpm
  - automatic transmission: 850–1000 rpm

— connect CO meter according to manufacturer's instructions

— connect CO probe ahead of catalytic converter at probe receptacle



— check CO and if necesssary adjust at adjusting screw (arrow)
  - 1.0 ± 0.5%

— secure CO adjusting screw with blue cap

Note

If CO cannot be adjusted following components may be defective:
- injectors
- spark plugs
- vacuum leak between cylinder head and intake manifold

Idle speed/CO, checking/adjusting
(Calif. only)

Work sequence

Preliminary conditions:

- engine oil temperature min. 60 °C (140 °F)
- intake air sensor must be 20 °C (68 °F)
- all electrical equipment must be **OFF**
- hose for charcoal filter must be disconnected and blocked at air filter

Note

To check engine rpm on vehicles with oxygen sensor and electronic ignition (Calif. vehicles), resistor adaptor must be used in conjunction with commercial tach/dwell meter

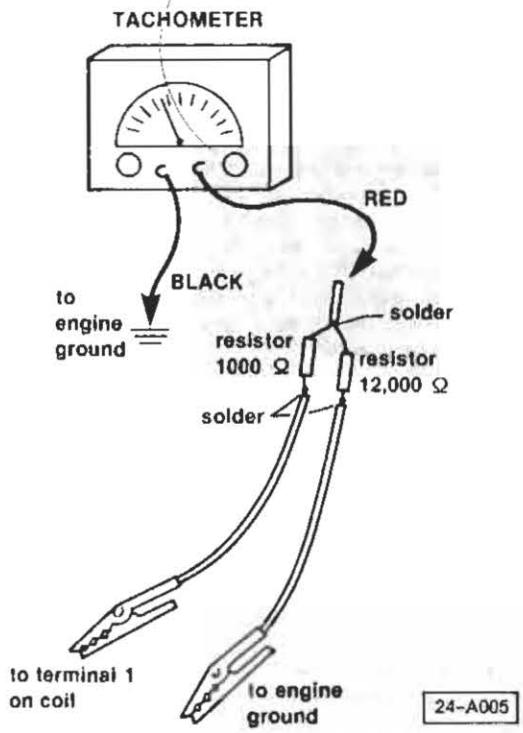

— assemble and connect adapter according to illustration
— check idle speed (with idle stabilizer connected)
• 850-950 rpm

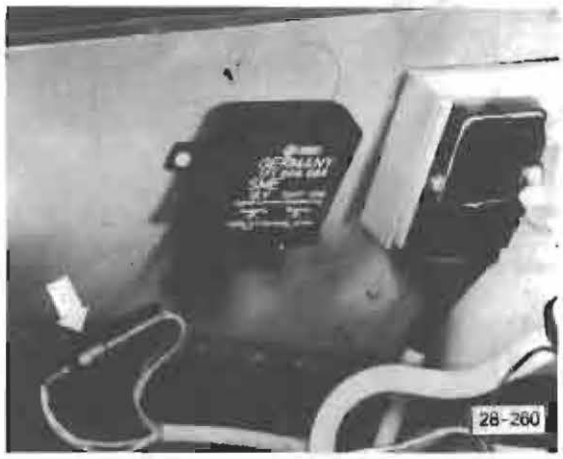

— disconnect plugs on idle stabilizer and connect together (arrow)
— check ignition timing and if necessary adjust (see Repair Group 28)
— check idle speed and if necessary, adjust
• 850-950 rpm (at adjusting screw)

— reconnect idle stabilizer
— start engine and slowly increase engine speed to at least 900 rpm
— release throttle
• idle must now be: 850-950 rpm
— if timing setting does not change with changes in rpm, replace idle stabilizer

Note

Before checking or adjusting CO, idle speed and ignition timing must be within specifications

— connect CO meter according to manufacturer's instructions
— connect CO probe ahead of catalytic converter at probe receptacle

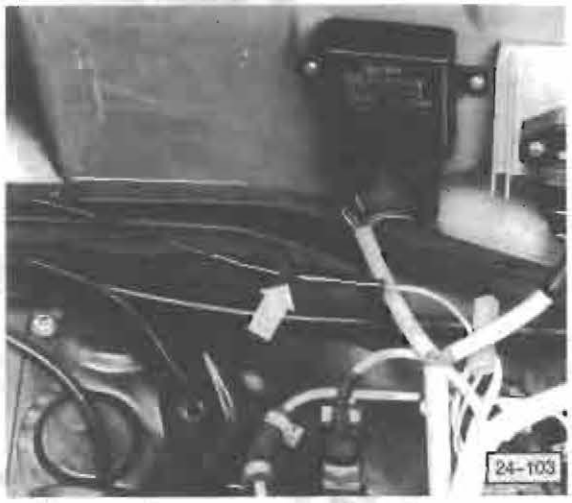

— disconnect oxygen sensor (arrow)
— check CO; if necessary adjust at CO adjusting screw (see photo 24-097, page 24.10)
• 0.7 ± 0.4%

Note

If CO cannot be adjusted following components may be defective:
• injectors
• spark plugs
• vacuum leak between cylinder head and intake air sensor

— reconnect oxygen sensor
• CO must be within specifications
— secure CO adjusting screw with blue cap

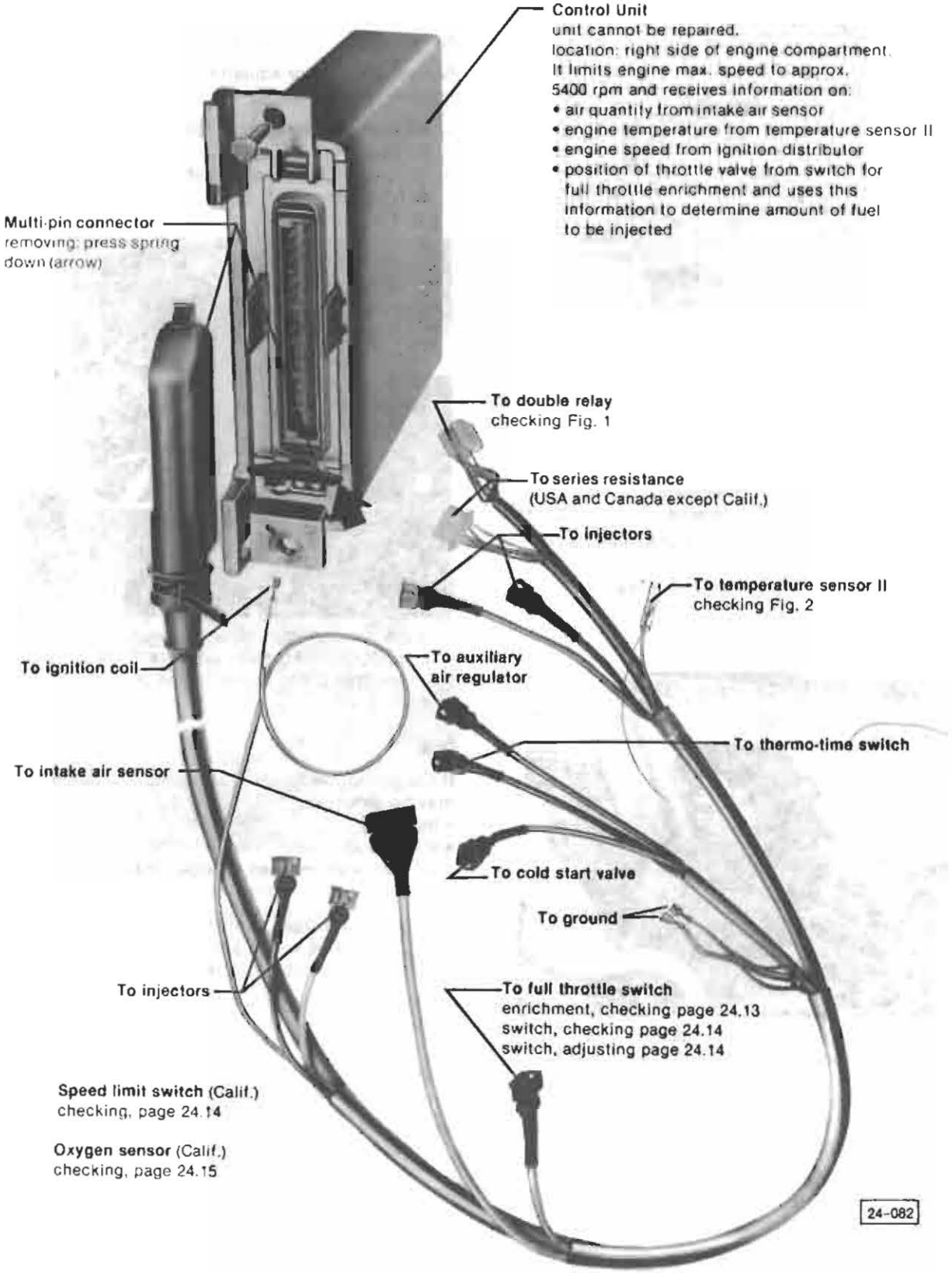
Control Unit
unit cannot be repaired.
location: right side of engine compartment.
It limits engine max. speed to approx. 5400 rpm and receives information on:
• air quantity from intake air sensor
• engine temperature from temperature sensor II
• engine speed from ignition distributor
• position of throttle valve from switch for full throttle enrichment and uses this information to determine amount of fuel to be injected
Multi-pin connector
removing: press spring down (arrow)
To double relay
checking Fig. 1
To series resistance
(USA and Canada except Calif.)
To injectors
To temperature sensor II
checking Fig. 2
To ignition coil
To auxiliary air regulator
To thermo-time switch
To intake air sensor
To cold start valve
To ground
To injectors
To full throttle switch
enrichment, checking page 24.13
switch, checking page 24.14
switch, adjusting page 24.14
Speed limit switch (Calif.)
checking, page 24.14
Oxygen sensor (Calif.)
checking, page 24.15
24-082

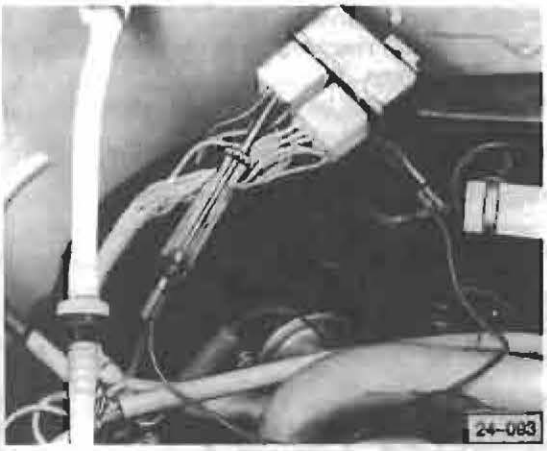

Fig. 1 **Double relay, checking**

— detach relay from firewall (do not unplug connectors)
— check for voltage at terminals at relay by attaching one lead of test light to terminal 85 and touching other lead to following:
  • 86a
  • 88y
  • 88d
— operate starter
  • test light must light up

if **NO**, check wire to battery or inline fuse
if wire or inline fuse OK, double relay defective and must be replaced



Fig. 2 **Temperature sensor II, checking**

Note

Temperature sensor in cylinder head supplies control unit with information for starting and warm-up enrichment

— disconnect temperature sensor wire from sensor
— "zero" ohmmeter and connect one probe to temperature sensor and other to ground
— check resistance at oil temperatures below

Oil temperature	Meter reading
– 10 °C (14 °F)	7,000–11,600 Ω
20 °C (68 °F)	2,100–3,100 Ω
80 °C (176 °F)	270–390 Ω

- if resistance reading too high, touch ground probe to steel housing of sensor
- if resistance now OK, problem is corrosion between sensor and cylinder head
- if resistance is still incorrect, replace temperature sensor II

Full throttle enrichment, checking

Work sequence

Note

This check shows possible defects in control unit or break in wiring between control unit and full throttle switch. At full throttle, this switch signals control unit to increase amount of fuel injected

California only

Vehicles for California are equipped with speed limit switch located between full throttle enrichment switch and control unit. Full throttle enrichment will take place when engine runs above 3000 rpm (at same time oxygen sensor switches off)

— warm engine until oil temperature is at least 60 °C (140 °F)
— check that idle speed, CO, and ignition timing are OK
— go to next page

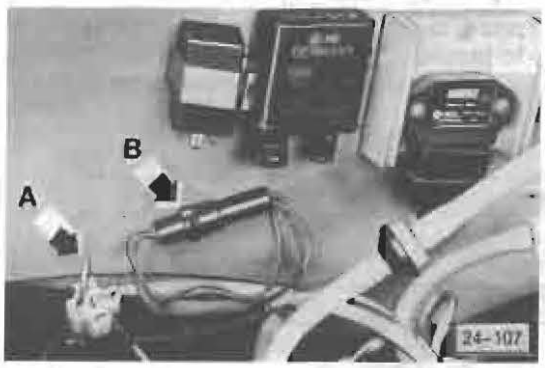

California only

— use jumper wire and make contact between terminal 4 and 8 (arrow **A**) of connector for speed limit switch
— pull off connectors for idle stabilizer and connect together (arrow **B**)

— run engine at idle and adjust to specifications in table

	USA/Canada	Calif.
Manual	800–950 rpm	850–950 rpm
Automatic	850–1000 rpm	850–950 rpm

— operate full throttle switch by hand
• idle speed must increase approx. 100 rpm
if **NO**, check full throttle switch and adjustment position
if OK, replace control unit or wiring between control unit and switch
— on Calif. vehicles readjust idle speed to specifications on sticker and reconnect idle stabilizer

Full throttle enrichment switch, checking

Work sequence



— "zero" ohmmeter and connect to contacts on switch
• with throttle valve closed, ohmmeter must read ∞ ohms
— open throttle valve slowly
• just before reaching stop, ohmmeter must read 0 ohms
if **NO**, switch must be adjusted or replaced

Full throttle enrichment switch, adjusting

Work sequence

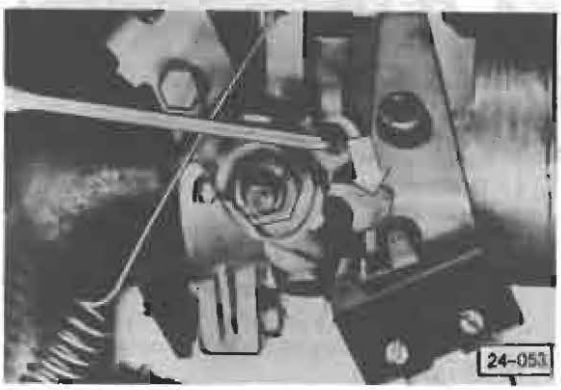

— depress accelerator pedal fully and hold in position
— loosen switch and move it until ohmmeter changes from ∞ ohms to 0 ohms
• roller should be in center of curved lever (arrow)
— tighten switch

Speed limit switch, checking

Work sequence

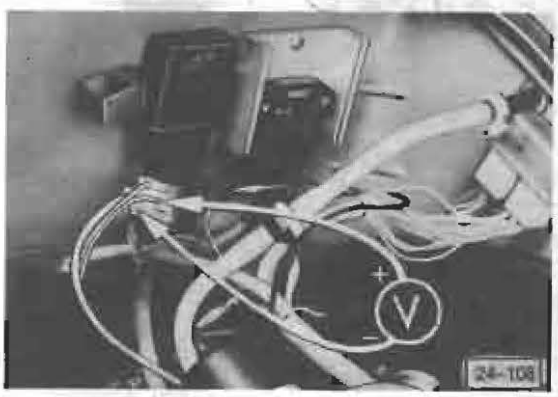

— connect positive lead (+) of voltmeter to switch terminal 8 and negative lead (−) to switch terminal 6
— start engine and accelerate to approx. 3000 rpm
• voltmeter must indicate battery voltage
if **NO**, replace speed limit switch

Note

Entire AFC System can be checked electrically at control unit plug using an ohmmeter or volt meter according to following chart.

Ohmmeter to terminal:	Specs	Checks
#1 and Ground	Disconnect white injection wire at coil ∞ ohms; hook wire to ground 0 ohms	Wire to #1 terminal on coil
#3 and #18	Press accelerator pedal down fully. 0 ohms	Full throttle enrichment circuit thru throttle switch
#5 and Ground	0 ohms	Ground Circuit
#6 and #9	200-400 ohms	Air Sensor Circuit
#6 and #8	130-260 ohms	Air Sensor Circuit
#8 and #9	70-140 ohms	Air Sensor Circuit
#6 and #7	40-300 ohms	Air Sensor Circuit
#7 and #8	100-500 ohms	Air Sensor Circuit
#6 and #27	Max 2,800 ohms at 68° F	Air Sensor Circuit
#13 and Ground	2,100-2,900 ohms at 68° F 270-390 at 176° F	Head Sensor
#14 and #10	Approximately 7 ohms	Injector wire and resistor
#15 and #10	Approximately 7 ohms	Injector wire and resistor
#32 and #10	Approximately 7 ohms	Injector wire and resistor
#33 and #10	Approximately 7 ohms	Injector wire and resistor
#16 and Ground	0 ohms	Ground Circuit
#17 and Ground	0 ohms	Ground Circuit
#34 at control unit and #37 on the double relay	Approximately 30 ohms	Auxiliary air regulator and wires

Voltmeter to terminal	Specs	Checks
#4 and Ground	12 volts during cranking 0 volts at all other times	Signal from starter
#10 and Ground	12 volts with key on 0 volts with key off	Voltage supply to computer
#20 and Ground	12 volts with key on and sensor flap open	Pump Circuit

Oxygen sensor, checking
(Calif. only)

Work sequence

Note

Oxygen sensor is located in exhaust system (in front of catalytic converter). It produces varying voltages (up to 1 volt) dependent on oxygen content of exhaust gases. These voltages are sent to electronic control unit which alter injection time accordingly. Oxygen sensor operates at all engine speeds, except warm-up and full throttle

Preliminary conditions:

- engine oil temperature at least 60 °C (140 °F)
- air temperature 20 °C (68 °F). Before starting following test procedures, wait until intake air sensor housing has assumed room temperature

— connect tachometer according to manufacturer's instructions
— connect CO meter to test receptacle in front of converter (do not connect at tailpipe)
— check idle speed and adjust if necessary
- 850–950 rpm

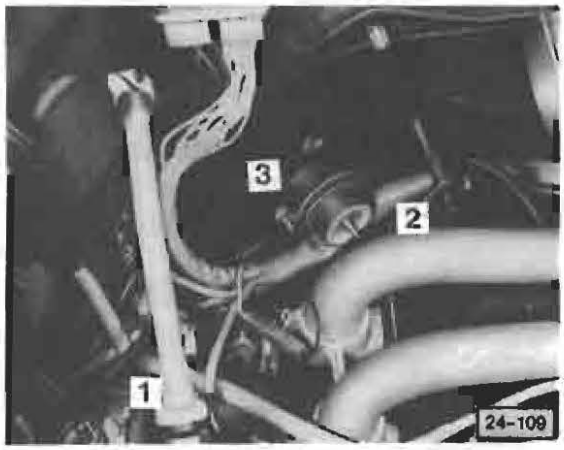

— disconnect oxygen sensor wire **1** to control unit
— check CO
- 0.7 ± .4%

— let engine idle, disconnect vacuum hose **2** at pressure regulator **3** and plug hose
- CO must increase to approx. 2.5%

— reconnect oxygen sensor wire **1**
- CO must drop to 0.7 ± 0.4% if oxygen sensor is OK

if **NO**, following components may be defective:
- oxygen sensor
- wire between oxygen sensor and control unit
- leak in exhaust system between catalytic converter and cylinder head

Wire between oxygen sensor and control unit, checking

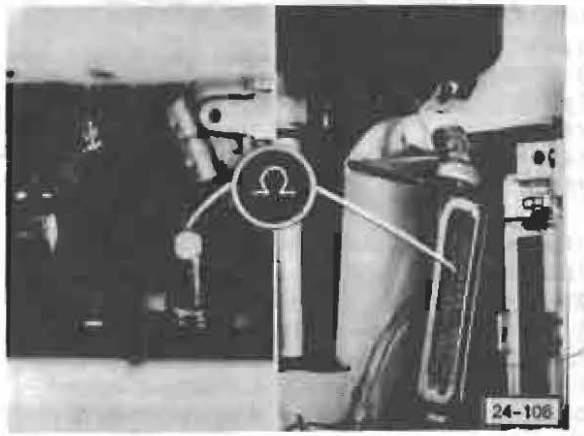

— connect ohmmeter between oxygen sensor and terminal **24** on control unit
- 0 ohm, sensor wiring OK
- ∞ ohm, sensor wiring defective

THIS PAGE INTENTIONALLY
LEFT BLANK

Technical data and specifications

Components—checking/adjusting	Specifications	Notes
Idle speed see chart page 24.19		• oxygen sensor connected
CO-value checking spec. adjusting spec.	 0.3–1.1% 0.7 ± 0.4% *	 • oxygen sensor and idle stabilizer connected • oxygen sensor disconnected *
Ignition timing	5° ± 1° ATDC	• idle stabilizer disconnected
Idle stabilizer control unit	below 940 rpm under load, ignition timing advances	• engage 4th gear at idle speed and engage clutch slowly; timing should advance
Fuel pump delivery rate	min. 500 cm³/30 sec.	• disconnect relay connection, turn ignition **ON**, let fuel pump run by using bridging adaptor US 4480/3
Pressure regulator/fuel pressure vacuum hose connected vacuum hose disconnected	 approx. 2.0 bar (29 psi) approx. 2.5 bar (36 psi)	 • idle speed • idle speed
Oxygen sensor wiring disconnected wiring connected	 CO above 2% CO 0.3–1.1%	 • vacuum hose at pressure regulator disconnected and plugged
Injectors fuel spray pattern voltage supply resistance	 even, coneshaped spray test light flickering approx. 16–16.4 ohms	 • operate starter • operate starter
Auxiliary air regulator cold warm	 open closed	 • pinch hose, rpm must drop • after idling about 5 min. pinch hose, rpm does **not** drop
Intake air sensor terminals: 6 and 9 or 3 and 4 7 and 9 or 2 and 3 6 and 22 or 1 and 4	 approx. 560 ohms ohms—changing 2300–2700 ohms	 — • move sensor plate • intake air sensor about 20 °C (68 °F)
Throttle valve switches for deceleration/idle speed for full throttle enrichment	 closed only during idle speed closed at full throttle	 — —

* note altitude; see adjustment procedure, page 24.29

Components—checking/adjusting	Specifications	Notes
Temperature sensor I and II for intake air temperature and coolant temperature	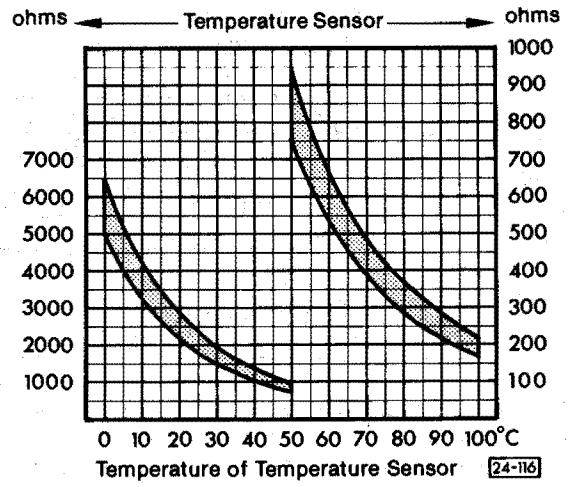	

Idle speed, specifications

Application/ Model year	Idle stab. control unit, identification/ Test conditions	Idle speed rpm
CAL and CAN	green, 251 906 083	
1983-85	control unit by-passed	850 ± 50
49 States	control unit connected	900 ± 50
1983-84		
49 States	black, 321 906 083	
1985	control unit by-passed	750 ± 80
	control unit connected	800 ± 50

Note

Replacing digital idle stabilization control unit can lower idle speed rpm. When replacing control unit, always recheck idle speed and adjust as necessary.

AFC System check with volt/ohmmeter

Note

Entire AFC system can be checked electrically at disconnected multi-pin connector of control unit

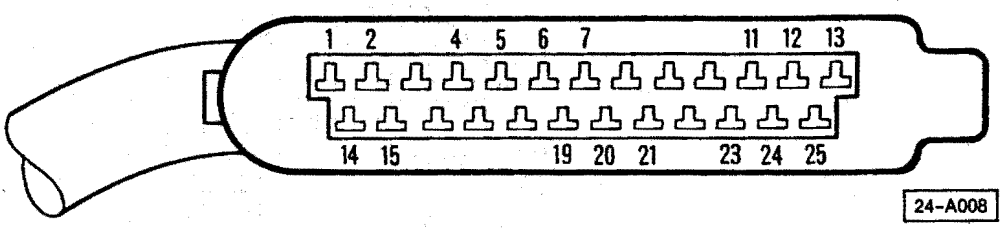

— remove multi-pin connector and turn ignition **ON**

Tester to terminal:	Components	Checks	Specs
1 and 7	Hall control unit type: AEG	• voltage with ignition **ON**	battery voltage or slightly less
1 and ignition coil terminal 15	HALL control unit type: FAIRCHILD	• touch center wire of connector at ignition distributor to ground	1.5 volts or slightly less
2 and 7	Temperature sensor II (coolant temperature)	• resistance at 20°C (68°F) see diagram page 24.19	2300–2700 ohm
4*) and 7	Deceleration/idle switch Full throttle enrichment switch	• idle speed position • full throttle position	0 ohms 0 ohms
5 and 7	Oxygen sensor	• connector disconnected and grounded • connector connected	0 ohms ∞ ohms
6 and 19	Intake air sensor	• resistance/potentiometer	approx. 560 ohms
7 and 25	Ground connection/control unit	• wiring	0 ohms
11 and 7	Fuel injector, cyl. 4	• injector and wiring	approx. 16–16.4 ohms
12 and 7	Fuel injector, cyl. 3	• injector and wiring	approx. 16–16.4 ohms
13 and 7	Relay, left; terminal 87	• ignition **ON**; function of relay, left	battery voltage
14 and 6	Temperature sensor I (intake air temperature)	• resistance at 20 °C (68 °F)	2300–2700 ohms
15 and 19	Intake air sensor	• resistance/potentiometer; if sensor plate is moved	ohms—changing

*) **do not** connect test light on this terminal if control unit is connected to multi-pin connector

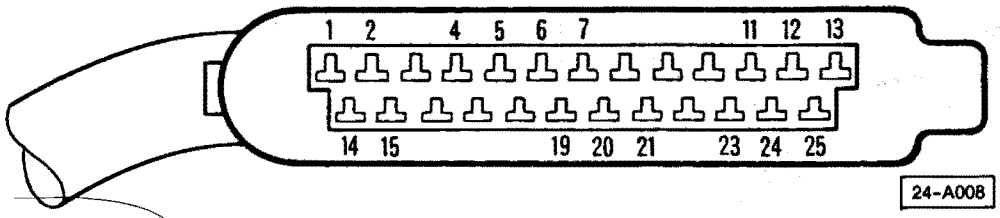

Tester to terminal:	Components	Checks	Specs
20*) and 25 bridged	Relay, right; terminal 86*)	• ignition **ON**; function of relay, right	fuel pump must run
	Auxiliary air regulator	• ignition **ON**; function of auxiliary air regulator	power must be supplied to auxillary air regulator
21 and 7	Wiring from starter; starting enrichment	• voltage at terminal 50 during starting — crank engine (with injector plugs **OFF**)	cranking voltage
23 and 7	Fuel injector, cyl. 1	• injector and wiring	approx. 16–16.4 ohms
24 and 7	Fuel injector, cyl. 2	• injector and wiring	approx. 16–16.4 ohms
25 and 7	Ground connection/control unit	• wiring	0 ohms

*) **do not** connect test light on this terminal if control is connected to multi-pin connector

CAUTION

During repairs always replace gaskets, seals and clamps

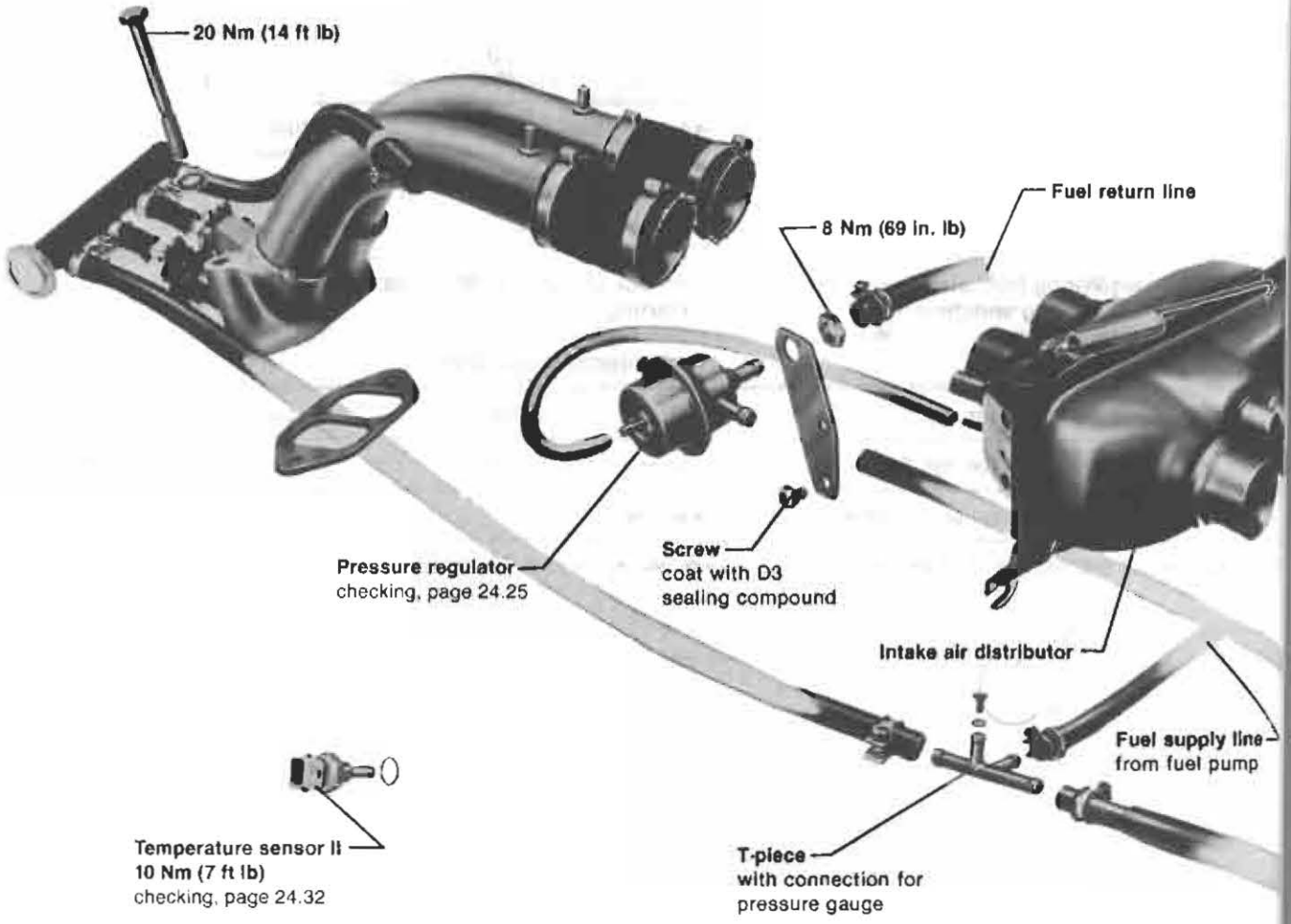

24-11

Note

Later versions have throttle body with 1 switch for idle speed, deceleration fuel shut off, and full throttle enrichment
checking/adjusting page 24.35
removing/installing page 24.36

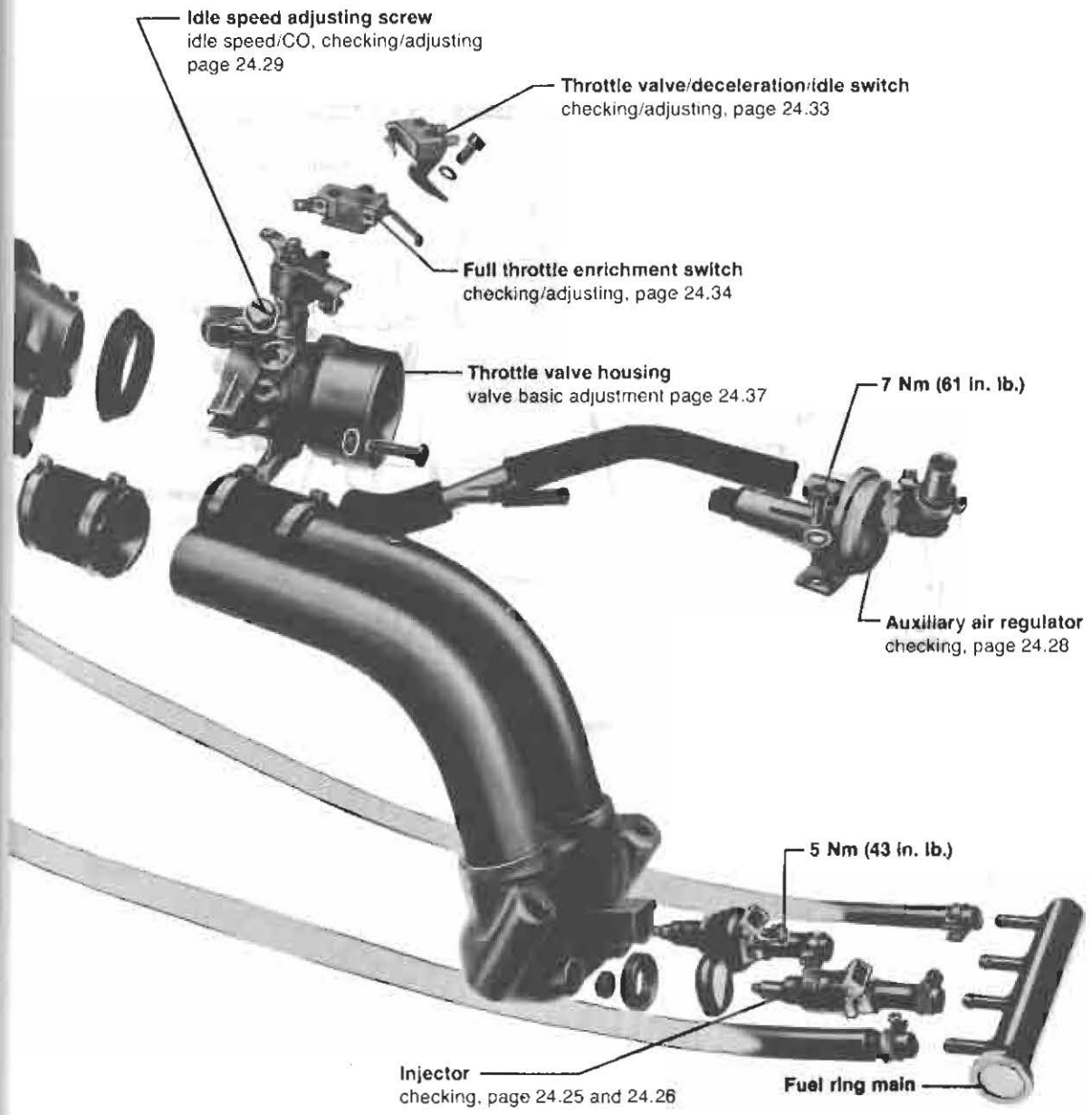

Vacuum hose layout
(early version)

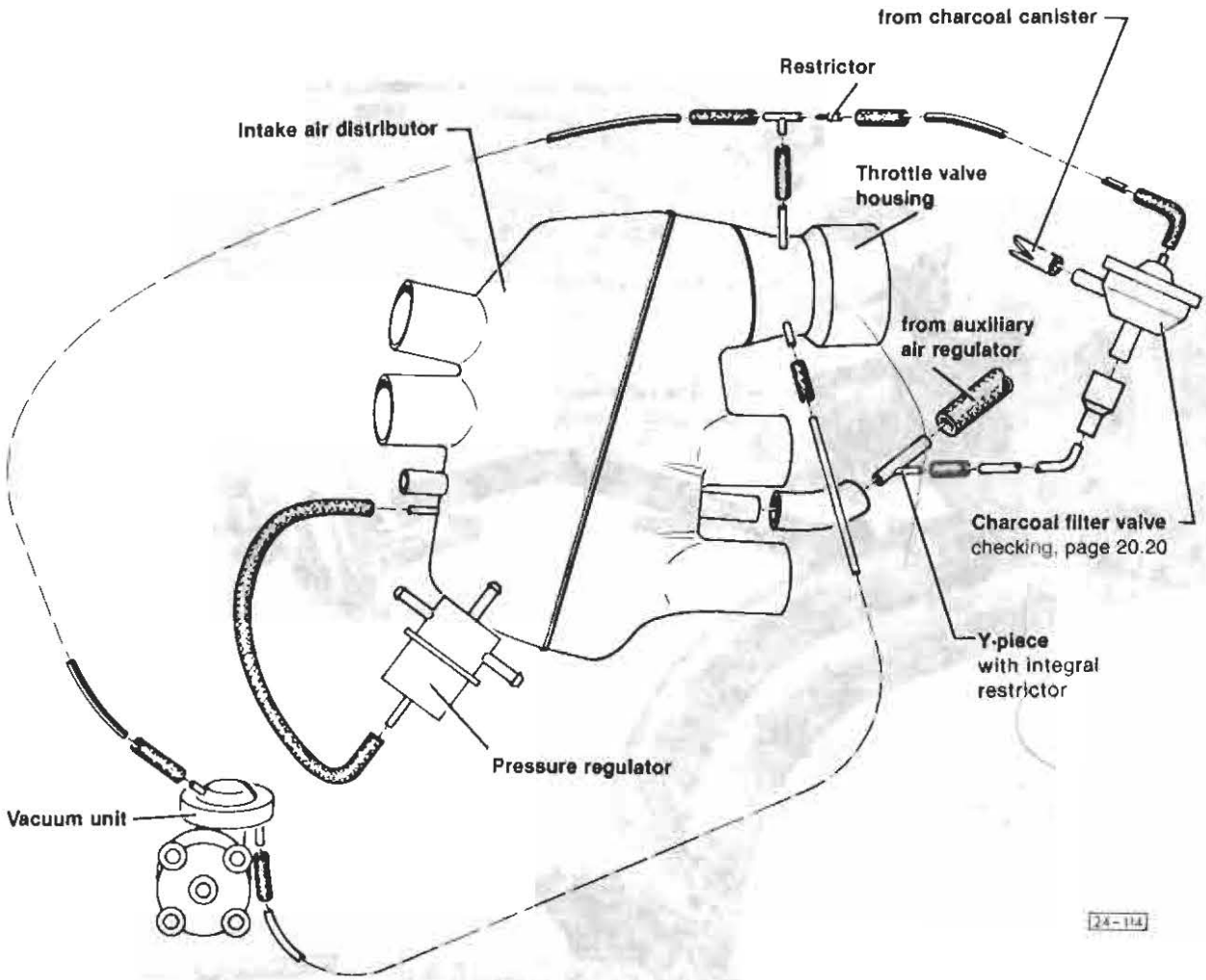

Vacuum hose layout
(late version)

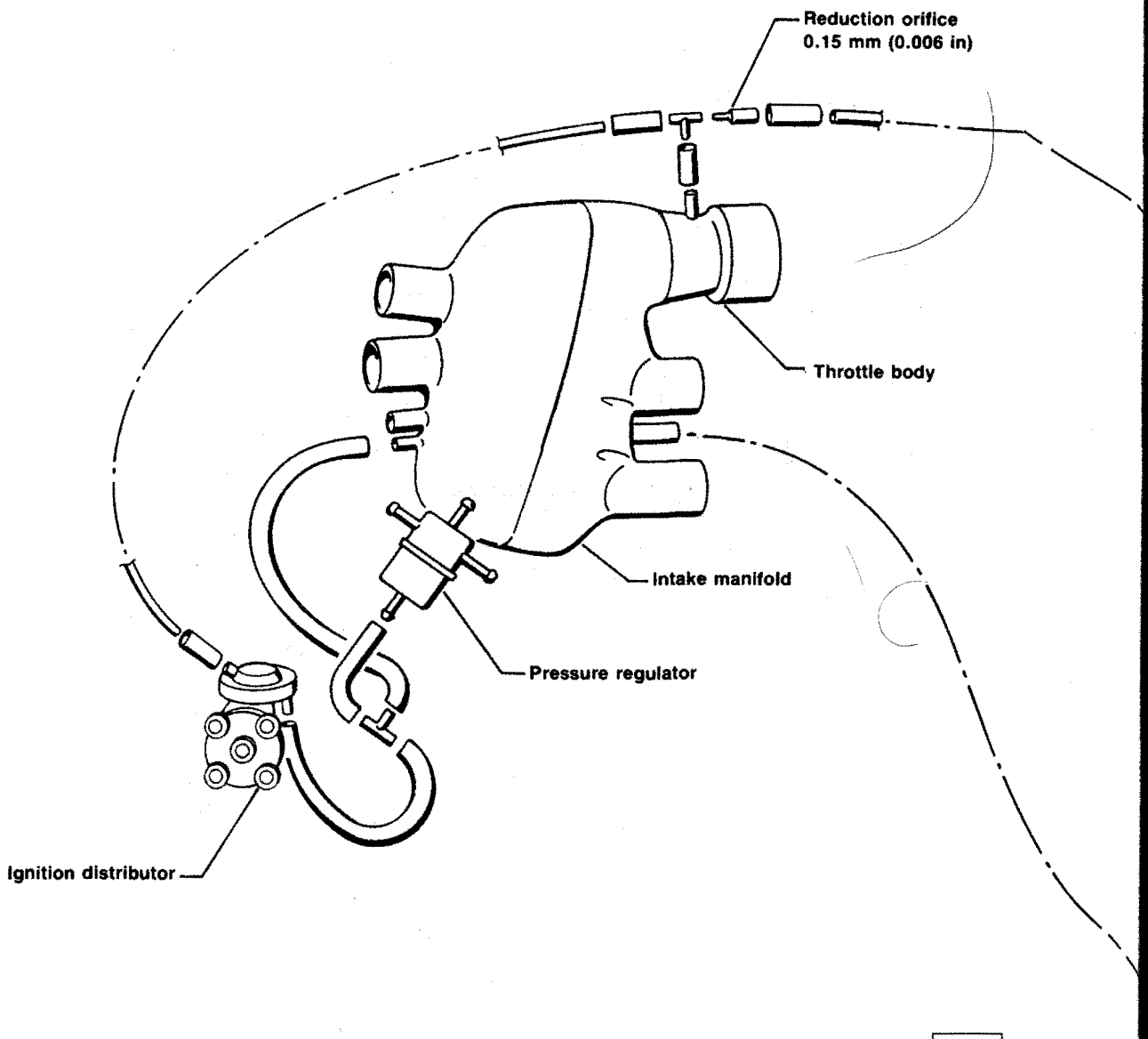

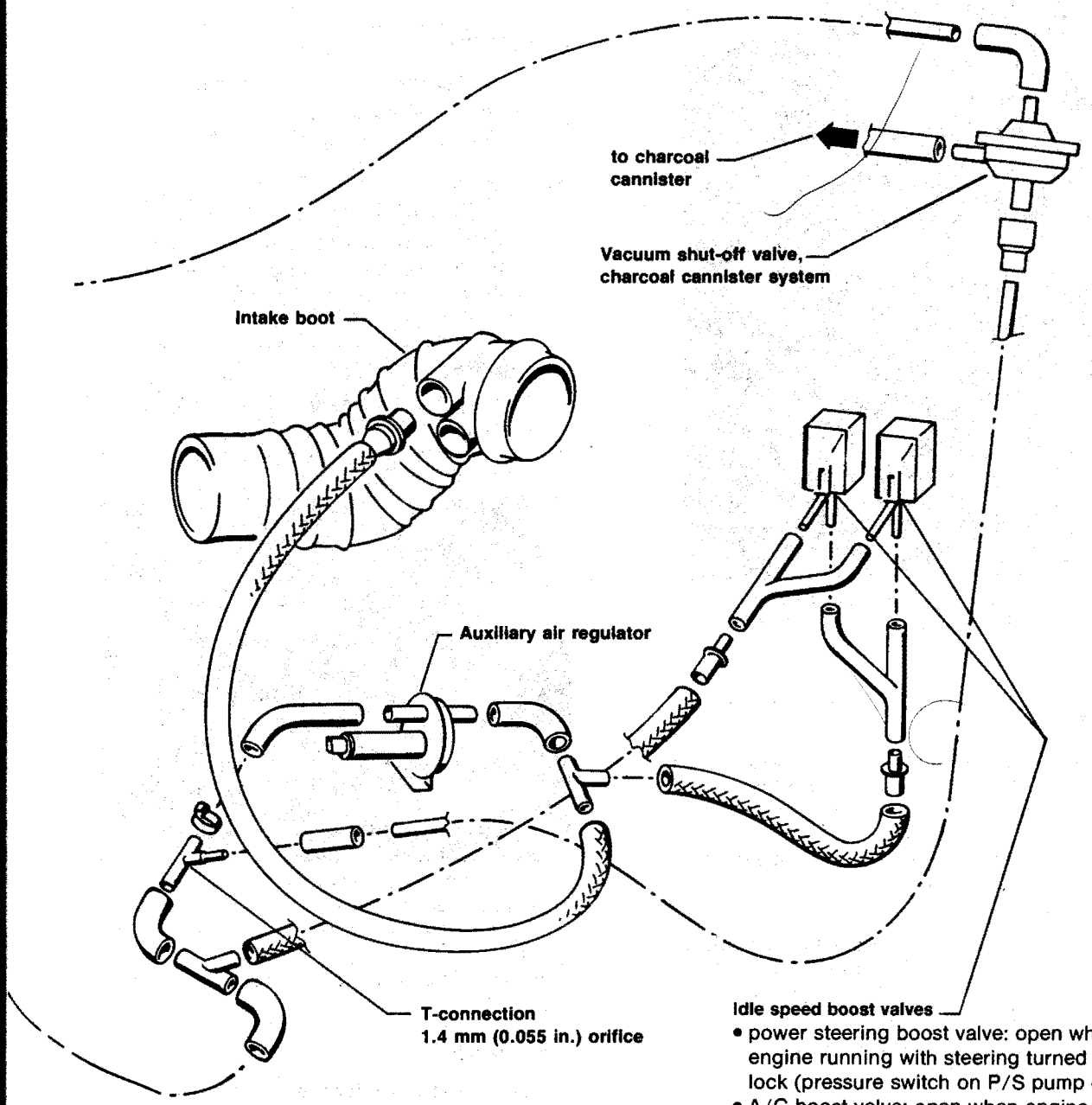
to charcoal cannister
Vacuum shut-off valve, charcoal cannister system
Intake boot
Auxiliary air regulator
T-connection
1.4 mm (0.055 in.) orifice
Idle speed boost valves
• power steering boost valve: open when engine running with steering turned to lock (pressure switch on P/S pump closed)
• A/C boost valve: open when engine running with A/C on, and compressor clutch engaged
24-148

Pressure regulator, checking

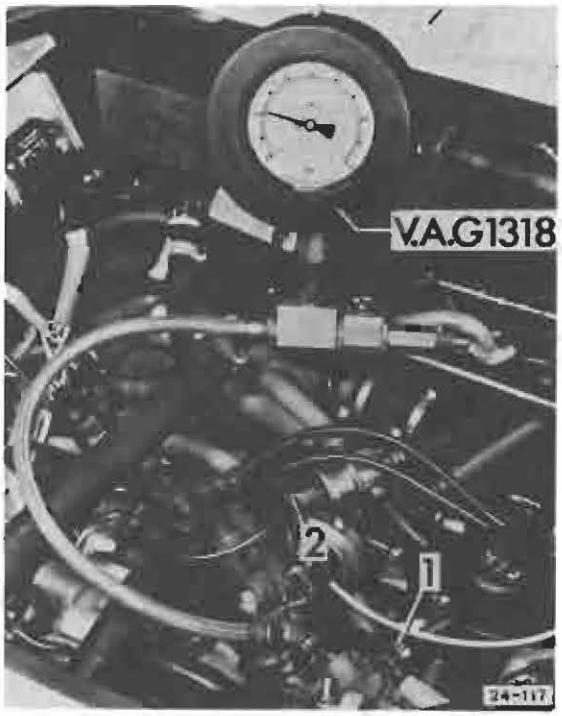

— connect pressure gauge V.A.G. 1318 or equivalent with adaptor to T-piece 1 of fuel line

CAUTION

Pressure gauge lever must be in closed position during measurement procedure

— run engine at idle speed and check pressure

Specifications:

bar (psi)	vacuum hose 2 (shown in above illustration)
approx. 2.0 (29)	connected
approx. 2.5 (36)	disconnected

Fuel injectors, checking

Work sequence

CAUTION

Do **not** disconnect terminal 1 at ignition coil when operating starter

Spray pattern

— pull out fuel injectors in pairs but leave electrical plugs and fuel lines connected
— disconnect electrical plugs at fuel injectors which are still installed (second pair)

WARNING

Fire hazard. Do not smoke or have anything in area that can ignite fuel



— hold injectors in jar or pan
— operate starter briefly
  • spray pattern must be an even, coneshaped spray
— reinstall fuel injectors with new sealing rings 1

Leak checking

— pull off electrical plugs at fuel injectors
— pull out injectors in pairs but leave connected to fuel ring line
— turn ignition **ON** for about 5 seconds (fuel pump operates briefly)
— check that no more than 2 drops leak from each injector in one minute

Voltage supply

> **CAUTION**
>
> To prevent damage to control unit, **do not** short-circuit connector contacts

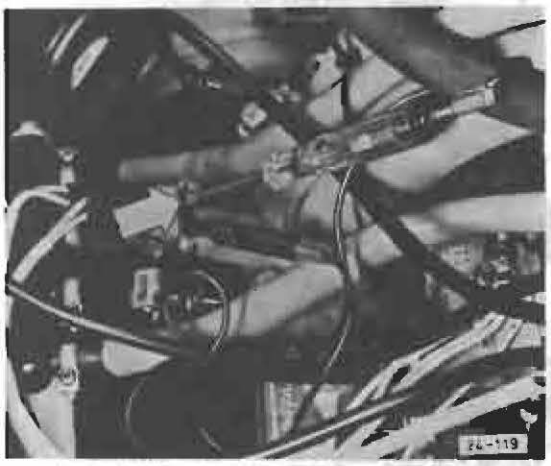

– pull off all electrical plugs from fuel injectors
– connect test light to one plug contact (arrow)
– operate starter
  • test light must flicker

If **NO**

–check relays, see page 24.32
– check impulse output of Hall control unit terminal **7**
– check all ground connections at cylinder head

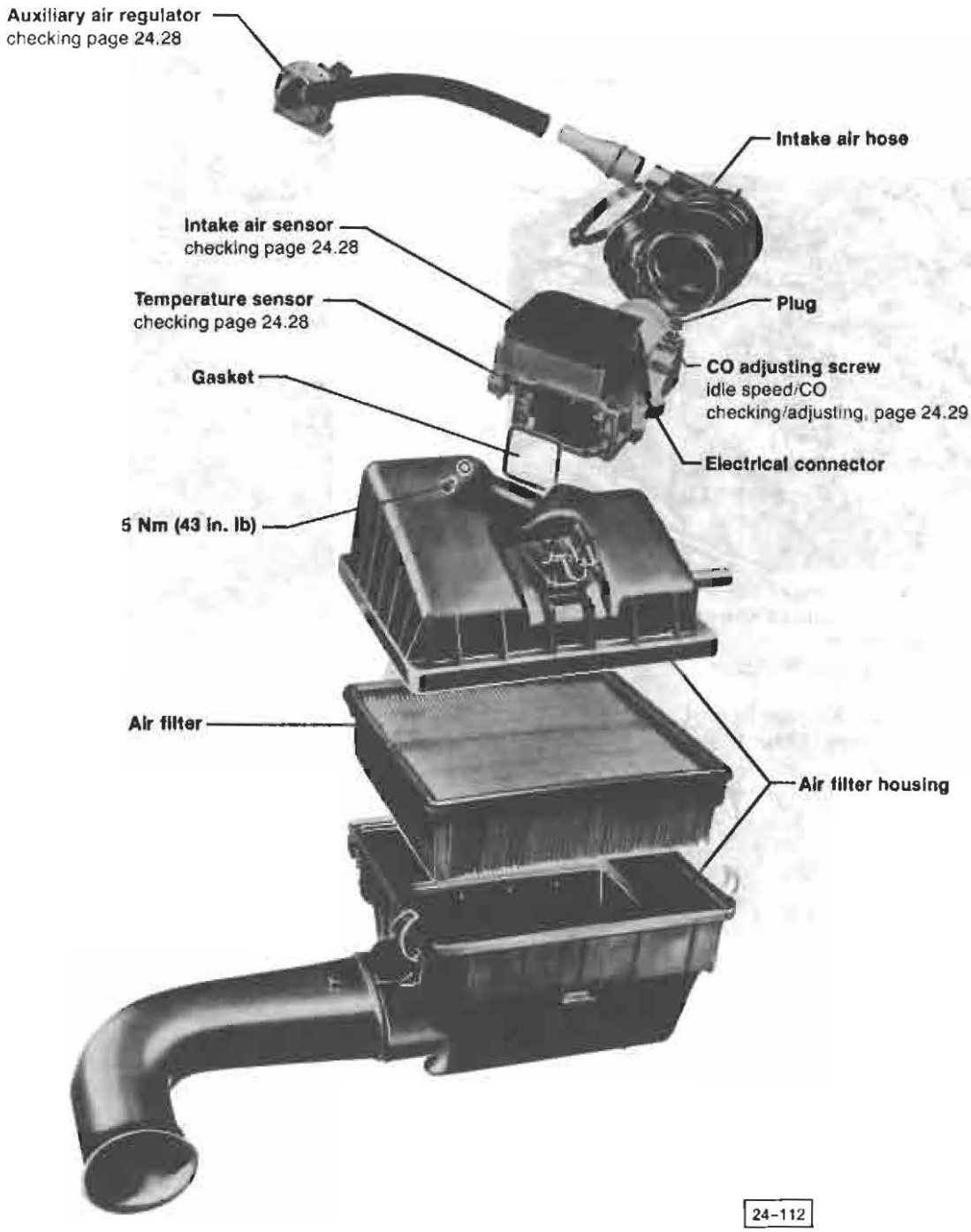
Auxiliary air regulator
checking page 24.28
Intake air hose
Intake air sensor
checking page 24.28
Temperature sensor
checking page 24.28
Plug
Gasket
CO adjusting screw
idle speed/CO
checking/adjusting, page 24.29
Electrical connector
5 Nm (43 in. lb)
Air filter
Air filter housing
24-112

Intake air sensor, checking

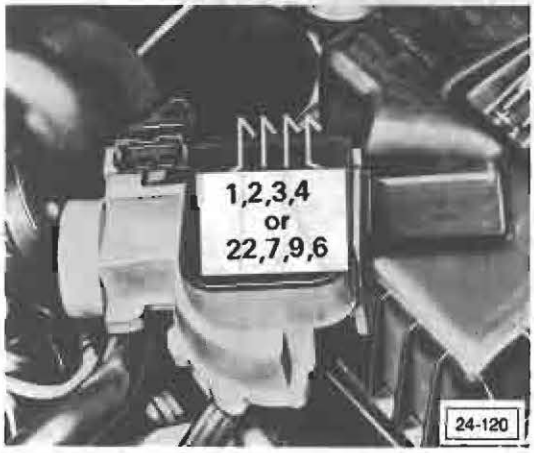

— pull off hose and electrical connector from intake air sensor
— connect US 1119 multimeter to following terminals of potentiometer (**arrows**)
- 3 and 4 or 6 and 9 = 500 to 1000 ohms
- 2 and 3 or 7 and 9 when moving sensor plate = resistance varies

Temperature sensor I, checking

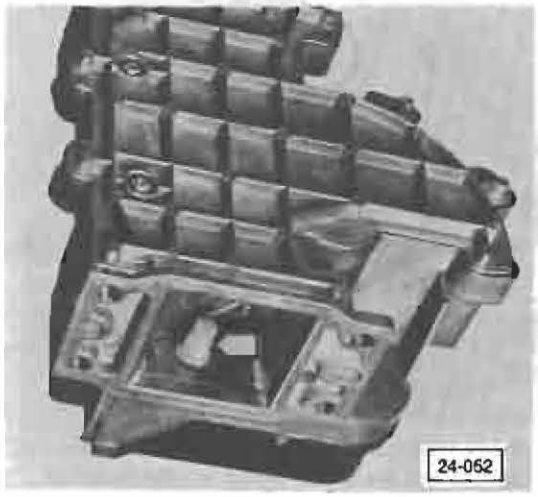

— connect US 1119 multimeter to terminals 6 and 22
- multimeter reading should correspond to graph

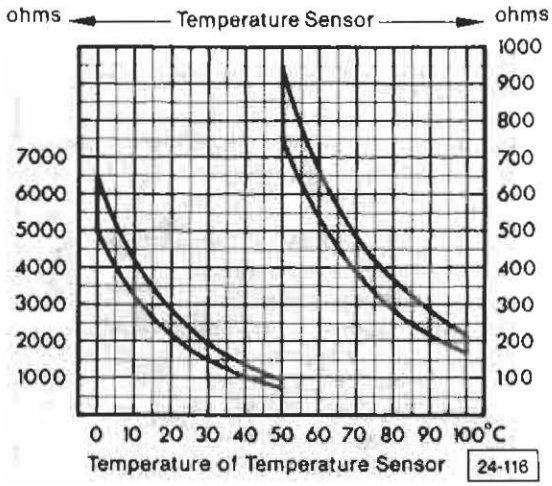

Note

If specifications are not reached, replace intake air sensor and readjust idle speed/CO value (see pages 24.29, 24.30).

Auxiliary air regulator, checking

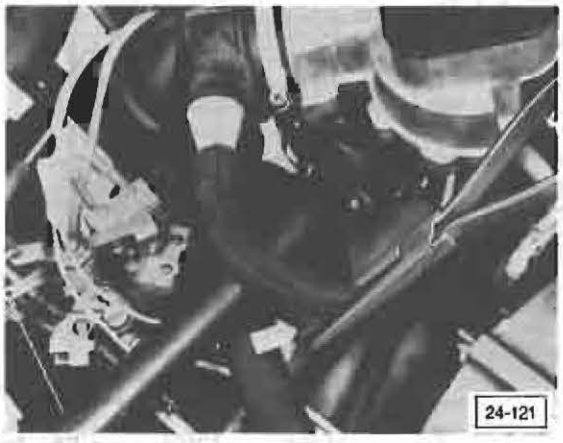

Note

When engine is cold, regulator is open fully, allowing additional air to engine.

- engine cold

— run engine at idle speed
— pinch hose (**arrow**)
- RPM must drop

— run engine at idle speed for about 5 minutes more
— repeat above test
- RPM must not change

If **NO**
— disconnect electrical plug from auxiliary air regulator
— check voltage supply with engine running

If **OK**
— replace auxiliary air regulator

Idle speed/CO, checking/adjusting

CAUTION

It is important to follow work sequence when checking and adjusting idle speed and CO value

1. Check ignition timing; if necessary adjust
   - idle stabilizer bypassed
   - oxygen sensor connected
2. Check idle speed; if necessary adjust
   - idle stabilizer bypassed
   - oxygen sensor connected
3. Check CO value; if necessary adjust
   - idle stabilizer connected
   - disconnect oxygen sensor wiring connection with ignition **OFF**
   - adjust CO value corresponding to local altitude. See shaded area of graph. shown below.
   - reconnect oxygen sensor at electrical connection.

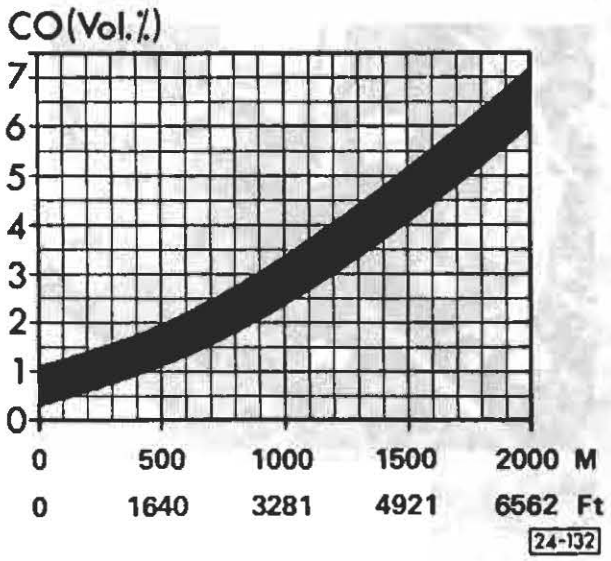

Work sequence

Preliminary conditions:

- engine oil temperature min. 60 °C (140 °F)
- all electrical equipment must be turned **OFF** (radiator fan must not run)
- throttle valve switch must be ON at idle

CAUTION

Ignition must be switched **OFF** before connecting tester

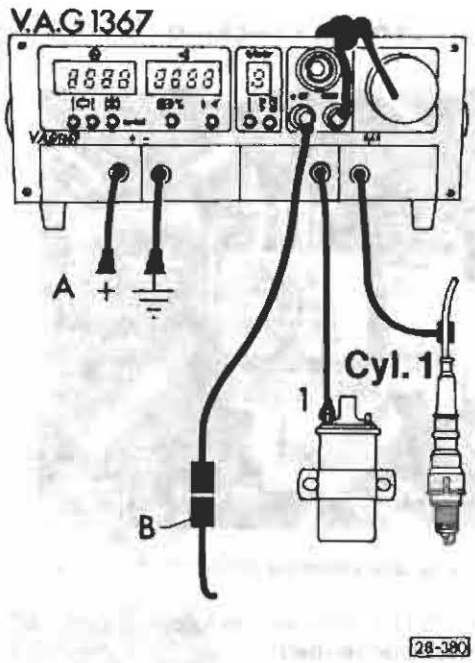

— connect tester V.A.G. 1367 as follows
- **A** to alternator or terminal box
- **B** to TDC sender

— connect CO meter to receptacle in left exhaust pipe



— check ignition timing and adjust if necessary
— disconnect electrical plugs at idle stabilizer control unit (squeeze to release—arrows)
— connect plugs together
— start engine and check ignition timing and adjust if necessary
- spec. = 5 ± 1 ° ATDC
- rpm = below 1000

— adjust ignition timing, see Repair Group 28

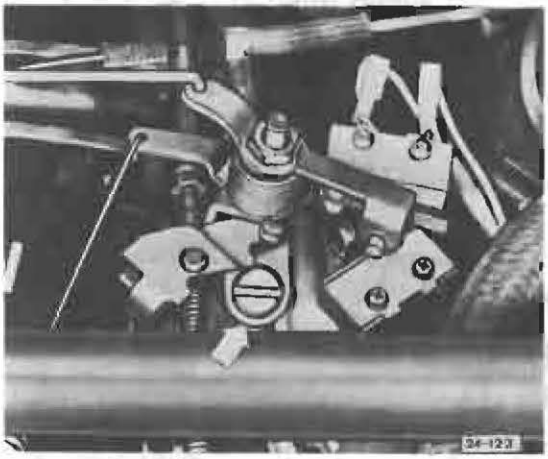

— run engine at idle speed
— check RPM after 2 minutes, if necessary adjust with screw (arrow)
— stop engine

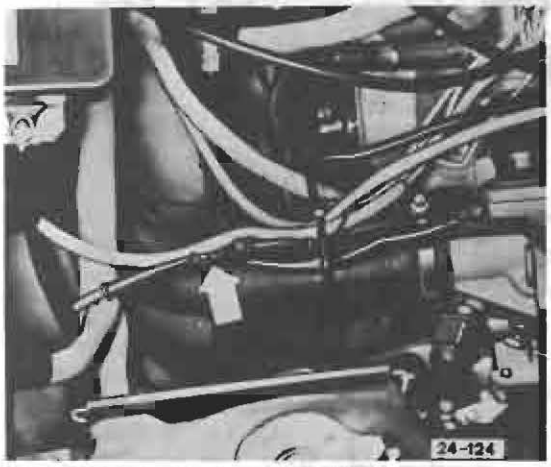

— check CO and adjust if necessary
  • idle stabilizer connected
— with engine **OFF** disconnect electrical connection at oxygen sensor (arrow)
— start engine and check CO value
  • checking spec. = 0.3-1.1%

Note

If CO value is above 1.1% pinch crankcase hose.
• CO should drop below 1.1%
if **YES**, CO adjustment is not necessary (engine oil dilution—change engine oil)
if **NO**, adjust CO (continue with procedure)

— stop engine

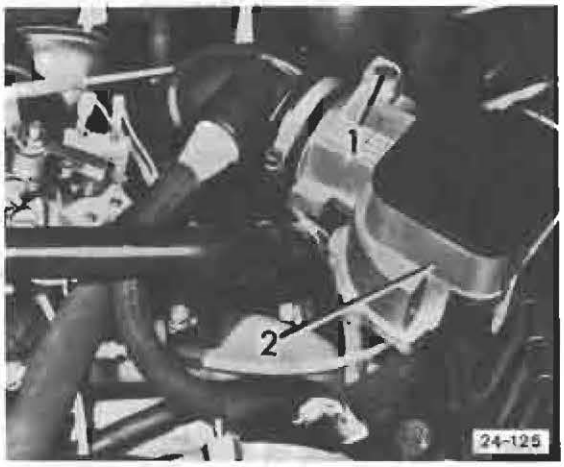

— adjust CO as follows:
— remove intake air sensor **2**
— center-punch plug in CO adjusting hole
— drill 2.5 mm (3/32 in.) hole in center of plug 3.5-4.0 mm (9/64-5/32 in.) deep

CAUTION

Clean up any metal shavings

— screw in 3 mm (1/8 in.) sheet-metal screw
— remove plug with screw, using pliers
— reinstall intake air sensor **2**
— start engine (oxygen sensor disconnected)
— adjust CO to 0.7 ± 0.4%
— stop engine
— drive in new plug flush with intake air sensor
— reconnect electrical connection of oxygen sensor

Note

With oxygen sensor and idle stabilizer connected
  • CO must be: 0.3-1.1%
  • Idle speed: 850-950 rpm

Idle stabilizer control unit checking, see Repair Group 28

Oxygen sensor checking, see Repair Group 26

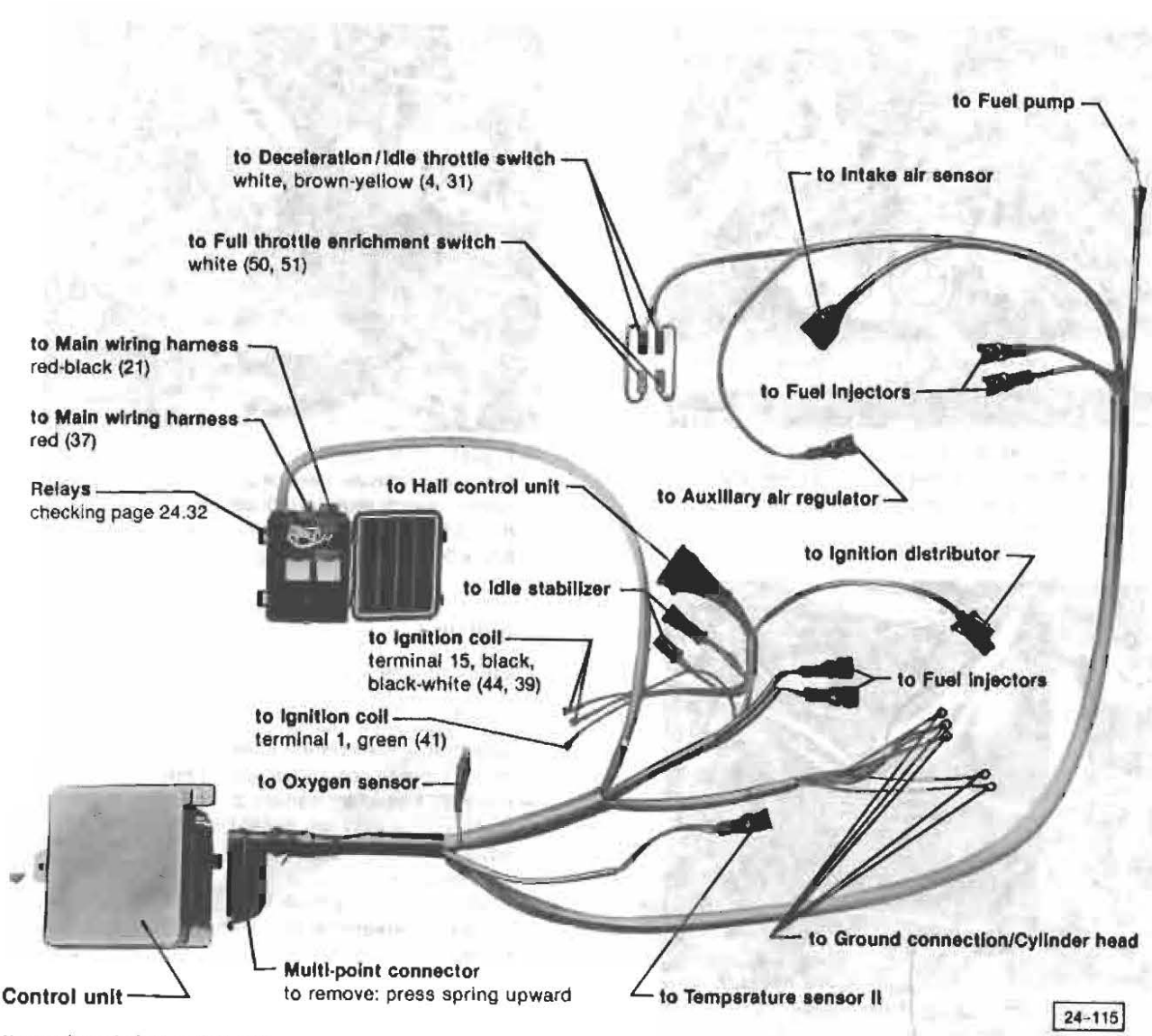

It receives information on:
- air quantity from intake air sensor
- intake air temperature from temperature sensor I in intake air sensor
- engine temperature from temperature sensor II
- engine speed from ignition distributor
- oxygen in exhaust gas from oxygen sensor
- position of throttle valve from full throttle enrichment/deceleration switch and uses this information to determine amount of fuel to be injected

Note

Always replace control unit if defective, can not be repaired in workshop

Note

Wiring has white color, note stamped number on it

Relays, checking (with relays installed)

CAUTION

Do not connect any test light to terminal 86 of adaptor **C** (shown in illustration) if control unit is connected

— remove all electrical plugs at fuel injectors

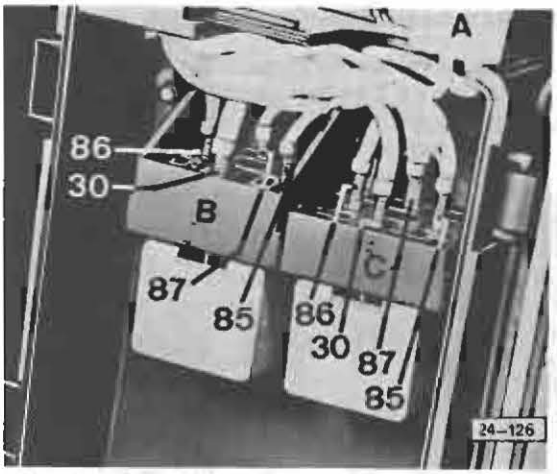

— turn ignition **ON**
— connect test light to ground and check following terminals for voltage:
- connection **A** = red wire terminal **30**
- adaptor **B** = terminals **30, 85, 87**
- adaptor **C** = terminals **30 and 85**
- test light should light

— operate starter and check with test light
- adaptor **C** = terminal **87**
- test light should light
- if test light does not light, check wiring by using current flow diagram
- if wiring is OK and no voltage at terminal 87, check relay
- if relay is OK, replace control unit

Relay on adaptor B, checking

— turn ignition **ON**
— connect test light to terminals **30 and 86**
- test light must light up

if **NO**, check wiring with current flow diagram

— connect test light to terminals **86 and 67**
- test light must light up

if **NO**, replace relay on adaptor **B**

Relay on adaptor C, checking

— connect test light between terminals **30 and 86**
— crank engine
- test light must light

if **NO**, check wire to terminal 20 of control unit
if **OK**, replace control unit
— connect test light to terminal **87**
— crank engine
- test light must light

if **NO**, replace relay on adapter **C**

Temperature sensor II, checking

Note

Temperature sensor II in coolant thermostat housing supplies control unit with information for starting and warm-up enrichment

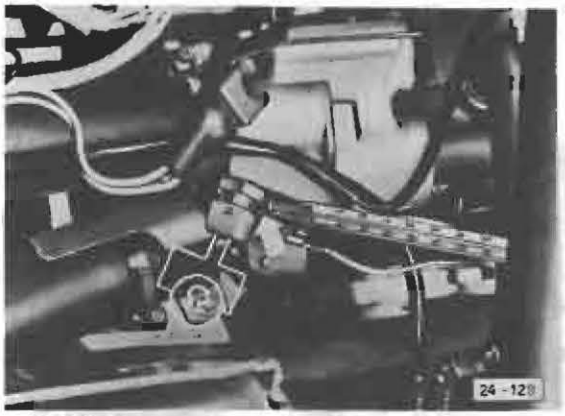

— check temperature and resistance of temperature sensor II
- check specifications, see diagram below:

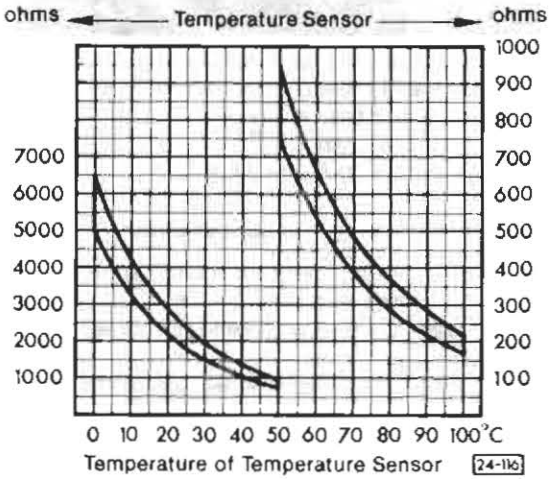

Throttle valve/deceleration/idle switch, checking

Note

This switch supplies control unit with information that throttle valve is **closed.**

If engine is above 1500 rpm with the throttle closed, fuel will be shut off to the injectors.

At idle speed, this switch signals control unit to regulate amount of fuel injected

> **CAUTION**
>
> Do **not** connect test light to throttle valve switch connectors if control unit is connected

First check (Throttle valve switch)

- throttle valve switch connectors disconnected

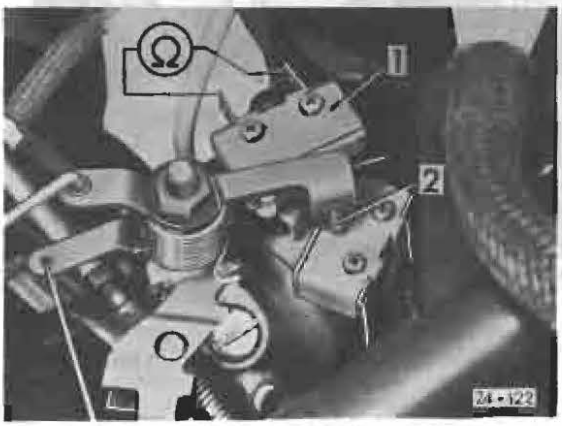

— attach ohmmeter to switch 1
- throttle valve closed
  switch turned **ON** = 0 ohm
- throttle valve open
  switch turned **OFF** = ∞ ohm

Second check (Wiring and control unit)

— run engine at idle speed for a short time
— stop engine and turn ignition **ON**
— pull off connectors from both throttle valve switches
— check voltage between connectors of throttle valve idle switch
- voltage should be approx. 5 volt

if **NO**, control unit is defective or break in wiring

Third check (Deceleration)

Test condition

- result of first and second check must be OK
- throttle valve switch connectors connected
- temperature at temperature sensor II must be minimum 60 °C (140 °F) and resistance below 550 ohms

— operate throttle valve switch by hand and accelerate slowly
- engine speed must fluctuate (surges)

If **NO**, replace control unit

Throttle valve/deceleration/idle switch, adjusting

- throttle valve closed

— adjust screw **2** so that switch just closes
— from this position turn adjusting screw exactly one turn farther in
— secure adjusting screw with sealant

Note

Correct adjustment is very important
If switch is mis-adjusted engine may surge or cut-out during acceleration

Full throttle enrichment switch, checking

Note

Full throttle enrichment switch supplies the control unit with information to increase amount of fuel injected at full throttle

> **CAUTION**
>
> Do **not** test light to throttle valve switch connectors if control unit is connected

First check (Throttle valve switch)

- throttle valve switch connectors disconnected

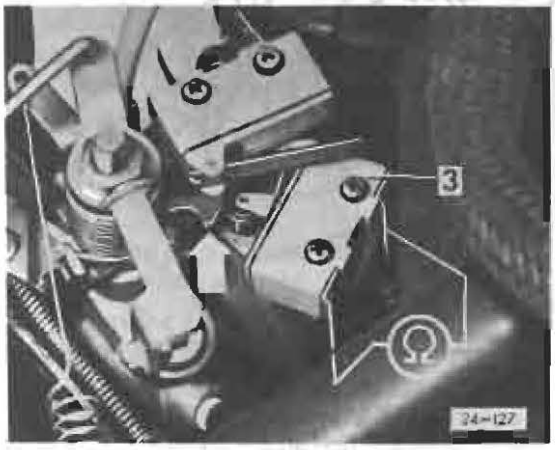

— attach ohmmeter to switch **3**
- throttle valve closed
  switch turned **OFF** = ∞ ohms
- throttle valve full open
  switch turned **ON** = 0 ohms

Second check (Wiring and control unit)

— run engine at idle for a short time
— stop engine and turn ignition **ON**
— pull off connectors from both throttle valve switches
— check voltage between connectors of full throttle enrichment switch
- voltage should be approx. 5 volts

if **NO**, control unit is defective or break in wiring

Third check (Full throttle enrichment)

Test conditions:

- result of first and second check must be OK
- throttle valve switch connectors connected
- temperature at temperature sensor II must be minimum 60 °C (140 °F) and resistance below 550 ohms
- CO tester and tachometer connected

— run engine for about 2 minutes at idle speed
— increase idle speed slowly until tachometer reads about 4000 rpm
- CO should be between 0.3 to 1.1%

— with engine at about 4000 rpm, operate full throttle enrichment switch **3** by hand for about 15 seconds
- CO must increase above 1.5%

if **NO**, control unit is defective

Full throttle enrichment switch, adjusting

— loosen retaining screw for switch
— open throttle valve fully and move switch until cut-in position is reached
- position of roller should be nearly in center of cam disk (arrow, photo, 24-127)

— retighten retaining screw for switch

Throttle valve switch
(design with 1 switch)

Function

With throttle valve **closed**, switch signals control unit about the following

- idle injection quantity
- switching off injection during deceleration

With throttle valve **open**, switch signals control unit about the following

- full throttle injection quantity

> **CAUTION**
>
> **DO NOT** connect test light to terminals of throttle switch unless control unit is disconnected.

Throttle valve switch, checking/ adjusting

(combined switch in single housing)

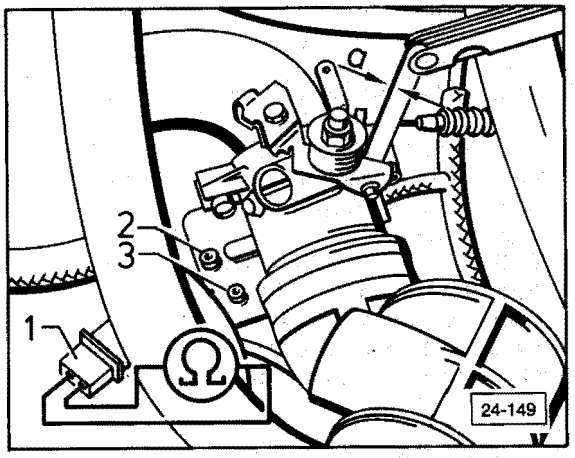

— connect multimeter **US 1119** across terminals of unplugged switch connector **1**
- multimeter must read 0 Ω only when throttle lever is at idle stop and full throttle stop
- check switch-on point of throttle switch as follows

— open throttle valve and slowly close
— measure switch-on point with feeler gauge between idle stop and idle adjusting screw
- must be 0.05-0.10 mm (0.002-0.004 in) before idle stop (gap **a**)

If measurement **NOT OK**
— correct by adjusting position of switch. Loosen screw **2** and adjust screw **3**

CAUTION

Basic throttle valve adjustment must **NOT** be changed.

Note

Correct adjustment is important. Following are conditions that are created by improper adjustment:

- gap **a** too large

Engine surges with lean condition.

- gap **a** too small

With cold engine, stalling at full throttle acceleration.
With engine warm, no deceleration fuel shut-off.

Control unit and wiring, checking

Work sequence

— switch ignition **ON**

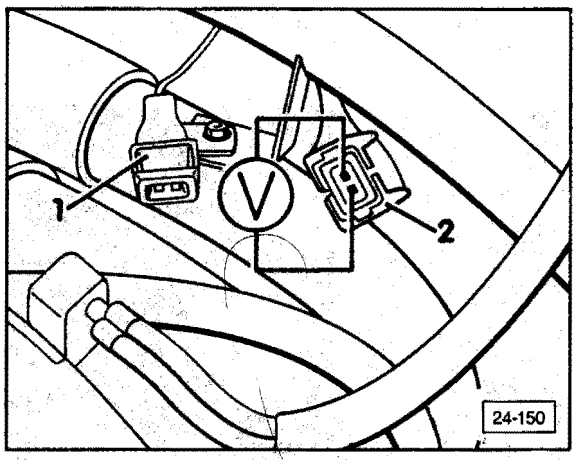

— using multimeter **US 1119**, check voltage present across terminals of connector **2**
- must be approximately 5 volts

If voltage reading **NOT OK**
— check for open circuit in wiring according to current flow diagram

If wiring **OK**
— replace control unit

Deceleration fuel shut-off, checking

Test conditions

- temp. sensor II minimum 60°C (140°F) with resistance reading less than 550Ω

Work sequence

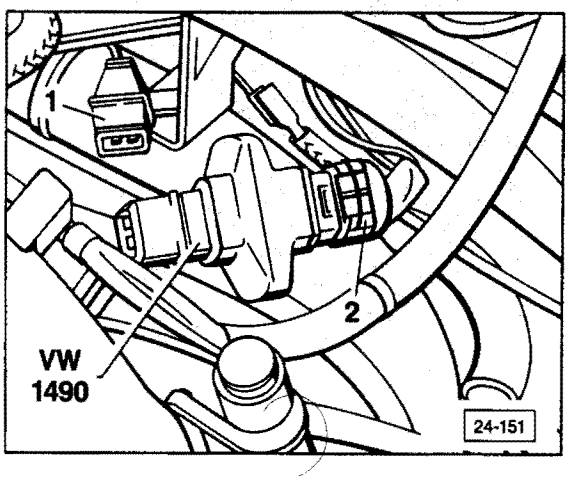

— using ⌐ end of tool VW 1490, bridge terminals of connector **2**
— accelerate engine slightly
- engine rpm must fluctuate (deceleration fuel shut-off system operates)

If rpm **DOES NOT** fluctuate
— replace control unit

Full throttle enrichment, checking

Test conditions

- temp. sensor II minimum 60°C (140°F)
- CO tester and VW 1367 connected

— start engine and let idle approximately two minutes
— slowly accelerate engine until 4000 rpm is reached
- CO must read 0.3-1.1% Vol.

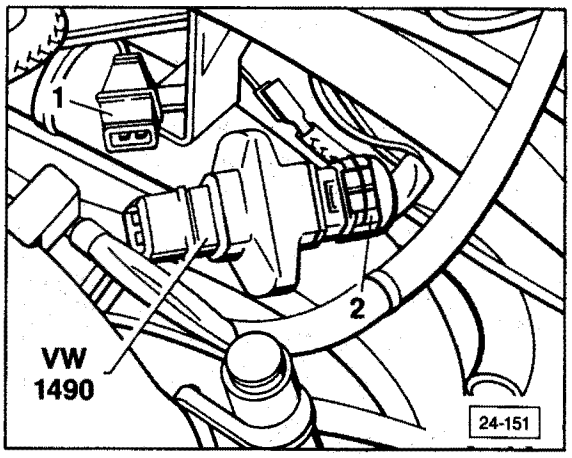

— using ⌐ end of tool VW 1490, bridge terminals of connector **2**
- CO reading must increase above 1.5% Vol.

If CO readings **NOT OK**
— replace control unit

Throttle valve switch, removing/ installing

Work sequence

— remove throttle body

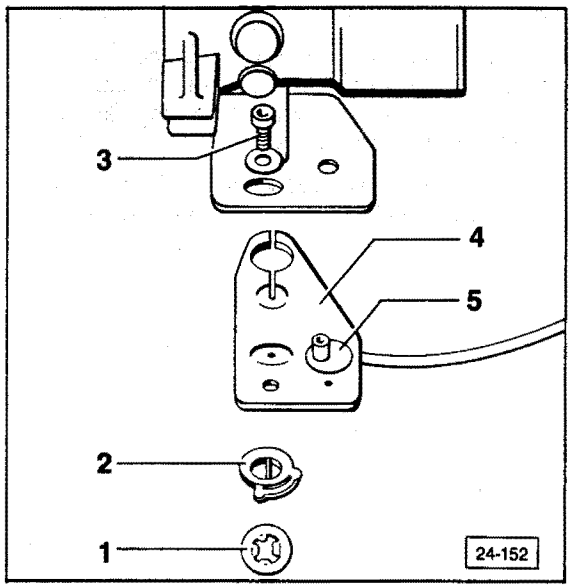

— remove switch **4** following numerical sequence of components **1** through **5**
— install components in reverse order
— perform basic adjustment as follows

Throttle valve, basic adjustment

Note

Stop screw is set at factory and should not be moved. If screw position has been altered, check basic adjustment as follows

Work sequence

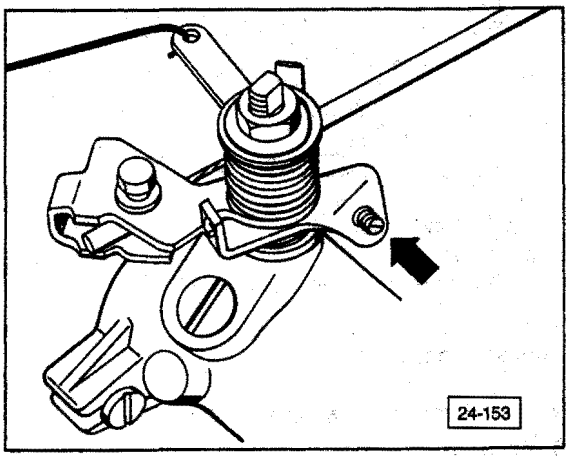

— turn adjusting screw (**arrow**) out until gap exists between stop and screw
— turn screw in until it touches stop

Note

In order to determine exact point of contact with screw stop, place a thin piece of paper between screw and stop. Slide paper and turn screw at same time until screw pinches paper.

— turn screw clockwise additional 1/2 turn
— check idle speed and CO; adjust if necessary

No voltage at injectors, troubleshooting

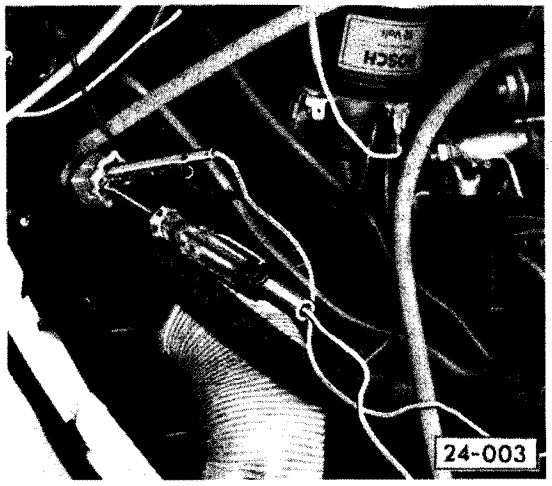

Voltage at injectors, checking

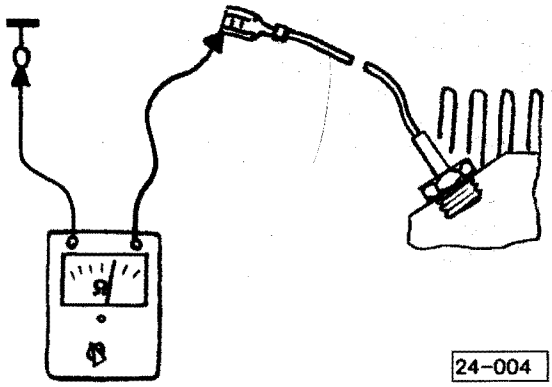

Temperature sensor, checking

from page 24.6

No voltage at injectors

- pull connector off one injector and connect test light
- operate starter, light should flicker weakly

test light flickers weakly	test light does not light	test light stays on
	go to page 24.40	replace control unit

Temperature sensor on cylinder head has no continuity or is shorted

- disconnect wire from temperature sensor
- connect ohmmeter on cylinder No. 4
- check that resistance is about 2.5 kΩ (engine at room temperature)

measured resistance is as specified	ohmmeter shows 0 Ω or ∞ Ω
	replace temperature sensor

Engine floods due to defective cold start valve

- pull connector off cold start valve
- start engine with throttle fully open, because spark plugs may be wet

Engine does not start	Engine starts
go to page 24.39	replace thermo time switch

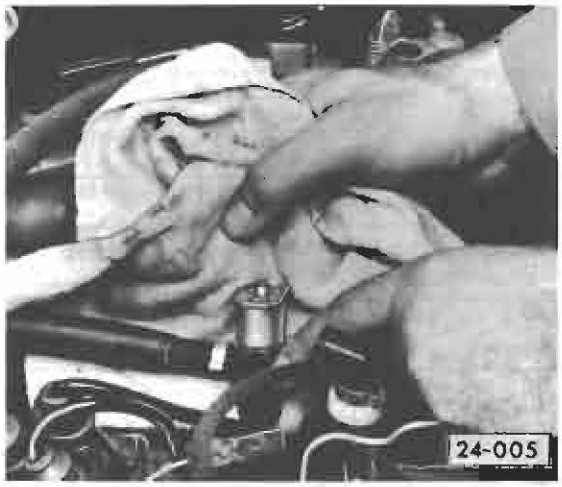

Cold start valve, checking

Warning
Fire hazard



Intake air sensor, checking

from page 24.38

Engine floods due to leaky cold start valve

- detach cold start valve from intake air distributor but leave it connected to ring main
- pull connector off cold start valve
- pull wire off ignition coil terminal 1
- operate starter

Valve does not leak

Valve leaks → replace cold start valve

Intake air sensor bad

- pull connector off air intake sensor
- connect ohmmeter to terminals 6 and 9 on intake air sensor (reading: 100 to 300 Ω)
- then check at terminals 7 and 8 (reading: 80 to 200 Ω)

Readings outside tolerances → replace intake air sensor

Readings as specified → Break in wire or connections between control unit and intake air sensor

24-010

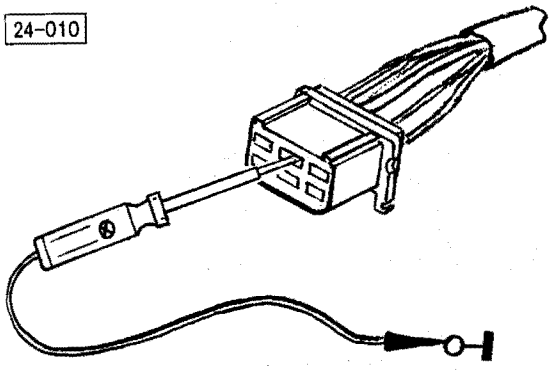

Double relay, checking

from page 24.38

Double relay defective

- connect test light between center slot in molded connector of series resistance and ground
- switch ignition on

Test light lights	Test light does not light

go to page 24.41

No voltage at double relay

- switch ignition on
- connect test light between:
  terminal 86c and 85 (to coil terminal 15)
  terminal 88z and 85 (to battery)
  terminal 88b and 85 (to series resistances)

Test light lights	Test light does not light
replace double relay	break in wire

from page 24.40

No triggering impulse from coil terminal 1

- pull multi-pin connector off control unit
- connect test light between terminal 1 and ground
- operate starter

Test light flickers	Test light does not flicker

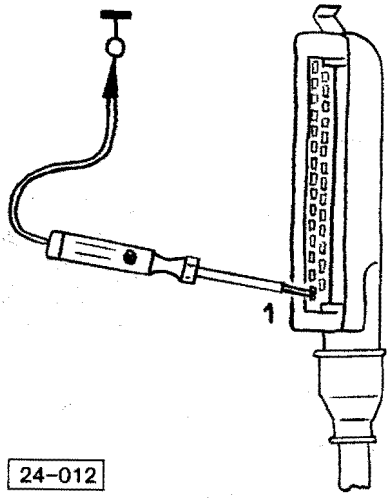

24-012

Triggering impulse, checking

Possible causes:
- break in wire between terminal 1 on distributor and terminal 1 on control unit multi-pin connector
- breaker contacts in distributor bad or incorrectly adjusted
- condenser ground connection
- ignition coil bad

Control unit has no ground connection

- switch on ignition
- test voltage between following terminals on multi-pin connector of control unit:
  terminal 10 and 5
  terminal 10 and 16
  terminal 10 and 17

Test light lights	Test light does not light

replace defective control unit

Possible causes:
- break in ground wire of control unit



CAUTION

Do **NOT** touch or disconnect ignition cables when engine is running or starter is cranked.

Disconnect wires in ignition system only when ignition is switched **OFF**.

Connect and disconnect tester leads to ignition system only when ignition is switched **OFF**.

When high tension cable (terminal **4** from coil) is disconnected from distributor, always connect it directly to ground using jumper cable. Otherwise, engine must **NOT** be cranked with starter (such as with compression test).

Vehicles that have a defect in the ignition system or are suspected of having one, may only be towed with the connector from terminal 1 of the ignition coil (green wire) disconnected.

Fast charging may only be used for emergency starting for up to 15 seconds maximum with no more than 16.5 volts. Wait at least one minute after each starting attempt.

Do **NOT** replace ignition coil with conventional type coil.

Battery must be completely disconnected when using arc, spot, or electrical welding equipment.

If components are heated above 80°C (176°F) such as from paint drier or steam cleaner, wait for components to cool down before starting engine.

Do **NOT** wash engine while it is running or ignition is switched **ON**.

Do **NOT** disconnect battery with engine running.

Do **NOT** apply voltage to control unit to simulate output signals.

CAUTION

When working on fuel system, always follow these precautions on cleanliness

— thoroughly clean all unions and area near connections before disconnecting
— place removed parts on a clean surface and cover over. Use paper or plastic sheet. Use only lint-free cloths
— components which have been opened or disassembled must be covered or sealed carefully if repair cannot be carried out immediately

— only install clean components
— only unpack replacement parts immediately before they are installed
— do not use parts that have been stored loose (for instance, in toolboxes)
— when fuel system is open, do not work with compressed air if this can be avoided or move car unless absolutely necessary

Technical data/specified values

Engine code		MV
Type		2.1 liter 70 kW, 90 SAE net HP
Introduction		October 1985
Part no. Control unit		025 906 022
Ignition timing	checking spec.	3-7° before TDC
	adjusting spec.	5 ± 1° before TDC
• Test and adjustment conditions	no.	1 and 9
Idle adjustment	idle rpm	880 ± 50 rpm
	CO content	0.7 ± 0.4 Vol. %
• Test and adjustment conditions	no.	1 to 6, 7, 8

Conditions and requirements:

1 — engine oil temperature min. 80°C (176°F)

2 — electrical consumers turned off

3 — crankcase breather hose on oil breather removed and closed tightly

4 — throttle valve switch turned on (continuity)

5 — idle stabilizer OK (valve vibrates and hums)

6 — ignition timing setting: OK

7 — connector (single connector) for idle stabilizer control valve disconnected

8 — with ignition OFF, disconnect connector (single connector) for oxygen sensor

9 — with engine running, double connector for temperature sender disconnected and rpm increased to 2000-2500 rpm by depressing throttle

Engine code		MV
RPM limiter (Control unit) switch-off rpm:		5500-5800 rpm
Idle stabilizer: valve (resistance)		continuity
current • connector (single connector) for control valve:	disconnected	approx. 430 mA constant
	connected	approx. 430 ± 20 mA, fluctuating
under load per following conditions: • steering turned all the way • selector switch in drive position • climate control switched on • electrical consumers turned on • engine cold		depending on load 440-1000 mA
Power steering pressure switch • measured at idle speed Steering:	straight ahead	no continuity
Steering:	turned all the way (to either side)	Ω display (continuity)
Fuel pump:	delivery quantity	min. 500 cm^3/30 sec
Pressure regulator • fuel pressure measured at idle rpm vacuum hose:	connected	approx. 2.0 bar (29 psi)
vacuum hose:	disconnected	approx. 2.5 bar (36 psi)

Engine code		MV
Injectors		
Spray pattern		cone shaped
Note ONLY connector connected is valve being checked		
Voltage supply • ALL connectors disconnected, starter operated		diode test lamp flickers
Resistance • measured on valve		15-20Ω
Air flow sensor		
Resistance between terminals:	3 and 4	500-1000 Ω
	2 and 3	change in resistance when air sensor plate is moved
	1 and 4	resistance dependent on temperature of air flow sensor — see diagram
Temperature sender • for engine temperature • resistance dependent on coolant temperature — see diagram at right		

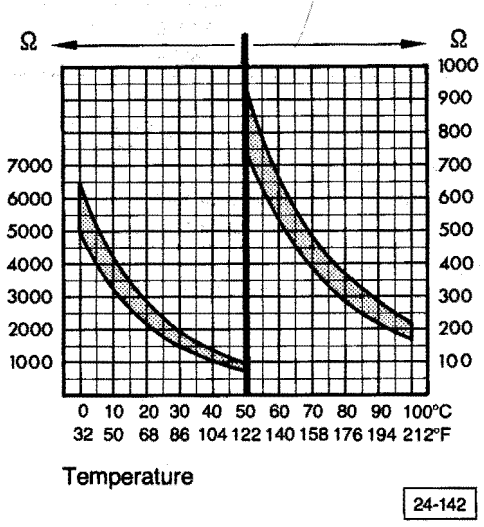

Fuel injection system, repairing

Technical data/specified value — pages 24.43-24.45
Note Rules of Cleanliness — page 24.42
Replace gaskets, sealing rings and spring clamps

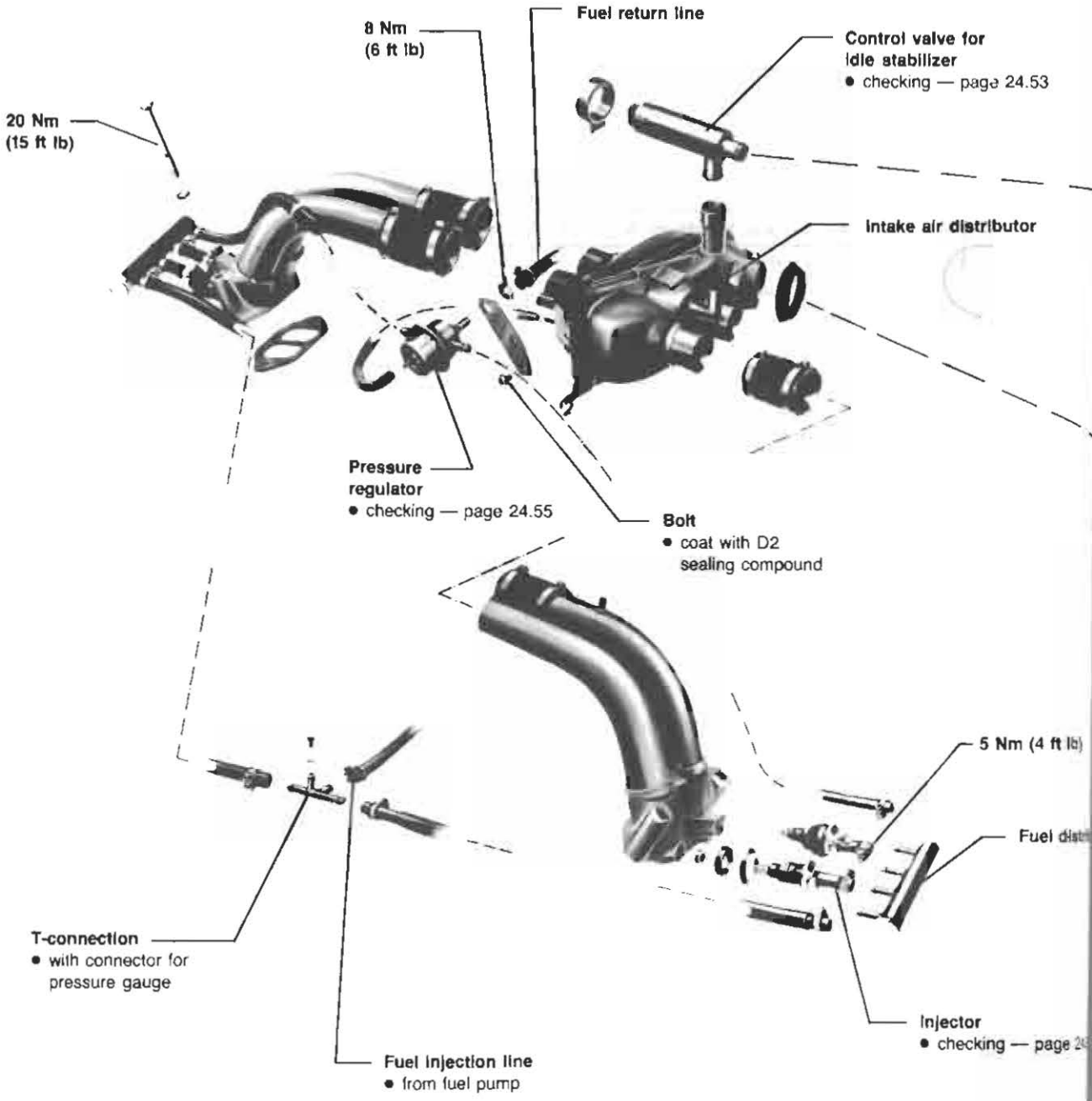

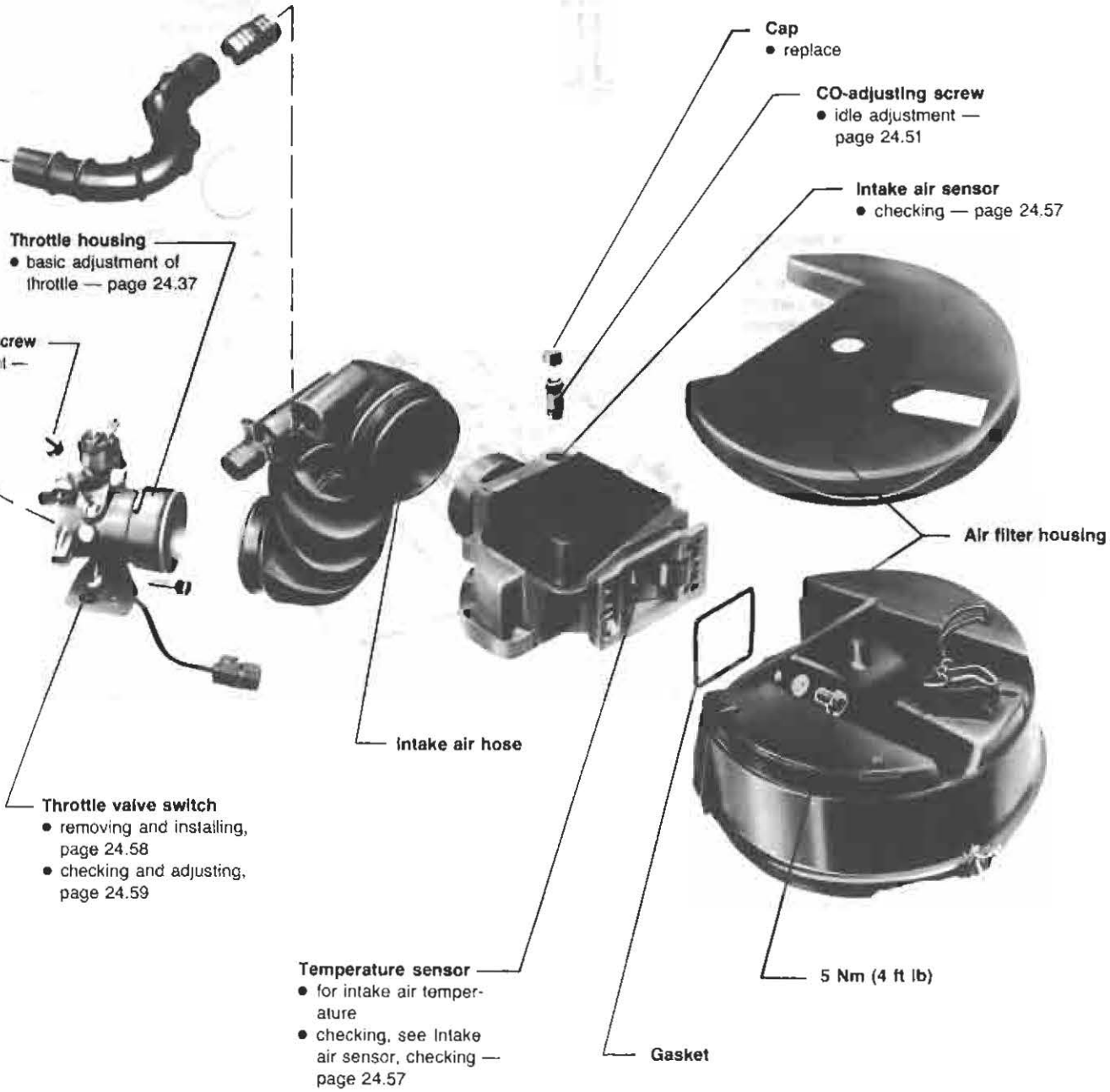
Cap
• replace
CO-adjusting screw
• idle adjustment — page 24.51
Intake air sensor
• checking — page 24.57
Throttle housing
• basic adjustment of throttle — page 24.37
Air filter housing
Intake air hose
Throttle valve switch
• removing and installing, page 24.58
• checking and adjusting, page 24.59
Temperature sensor
• for intake air temperature
• checking, see Intake air sensor, checking — page 24.57
Gasket
5 Nm (4 ft lb)
24-183

Fuel injection system components

Note

Electrical checking of ignition and fuel injection system — pages 24.61, 24.62
Safety precautions — page 24.42

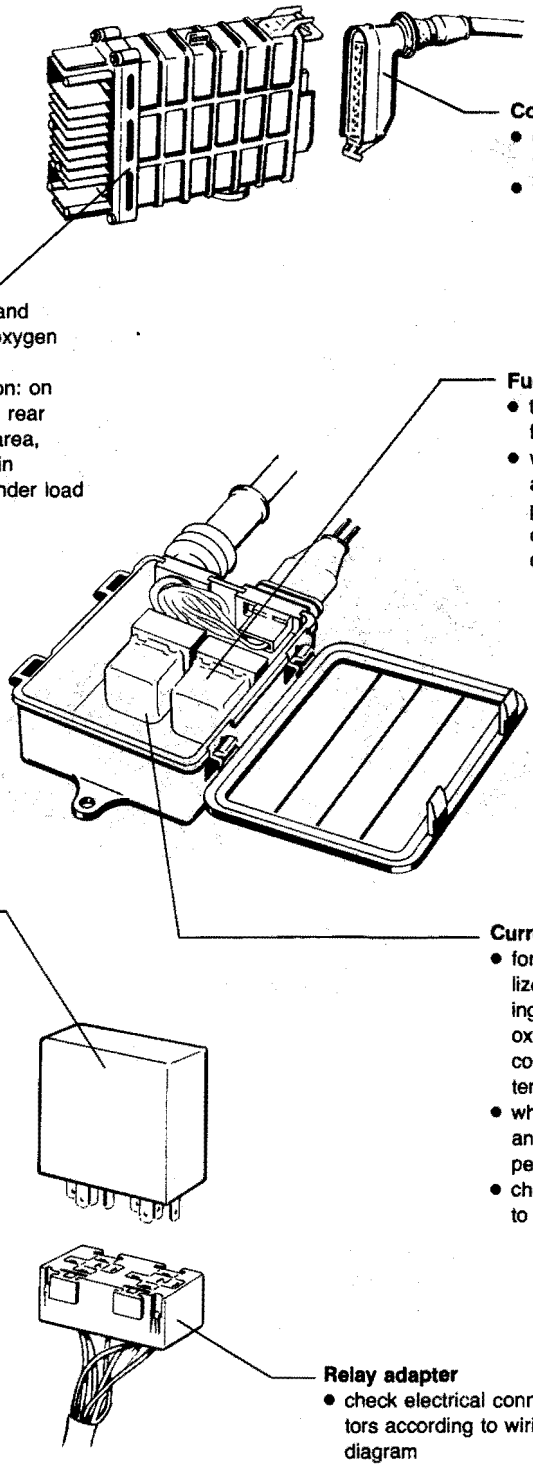

Connector
- connect or disconnect only with ignition off
- to remove, press spring up

Control unit
- for fuel injection and ignition system, oxygen regulation
- installation location: on trunk floor behind rear seat or in cargo area, in platform truck in equipment box under load surface

Fuel pump relay
- to current supply for fuel pump
- when turning ignition on and off, relay must switch perceptibly (requirement: current supply relay and control unit OK)

Idle stabilizer control unit
- connect and disconnect only with ignition off
- check idle stabilizer — page 24.53
- installation location: in front of right tail light

Current supply relay
- for control unit, idle stabilizer control unit, pwr. steering pressure switch, injectors, oxygen sensor heating and control for fuel pump relay terminal
- when switching ignition on and off, relay must switch perceptibly
- check connectors according to current flow diagram

Relay adapter
- check electrical connectors according to wiring diagram

24-185

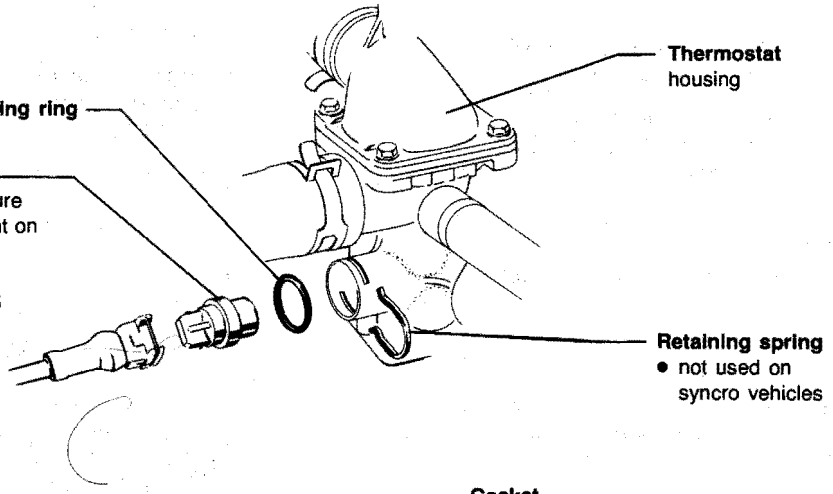
Thermostat housing
Sealing ring
Temperature sender
• for engine temperature
• resistance dependent on coolant temperature, specified value: diagram, page 24.45
Retaining spring
• not used on syncro vehicles

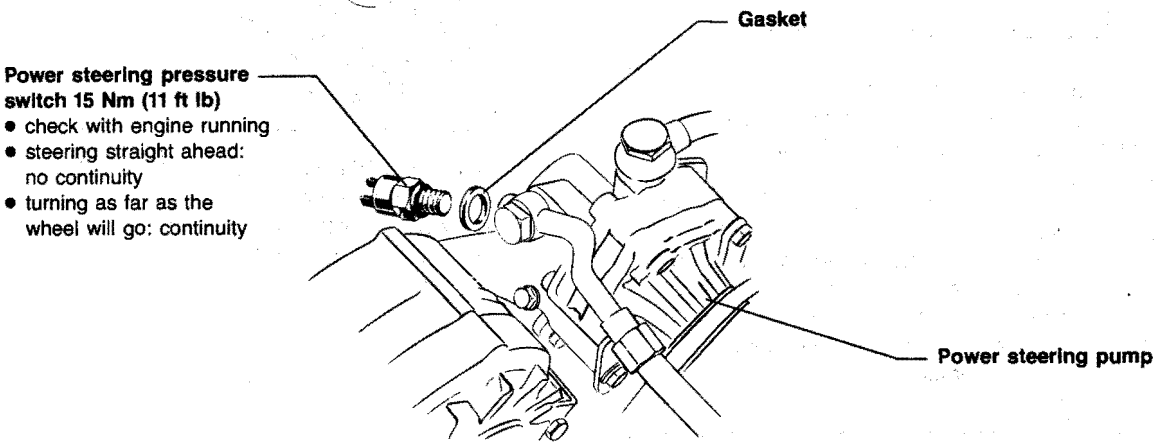
Gasket
Power steering pressure switch 15 Nm (11 ft lb)
• check with engine running
• steering straight ahead: no continuity
• turning as far as the wheel will go: continuity
Power steering pump

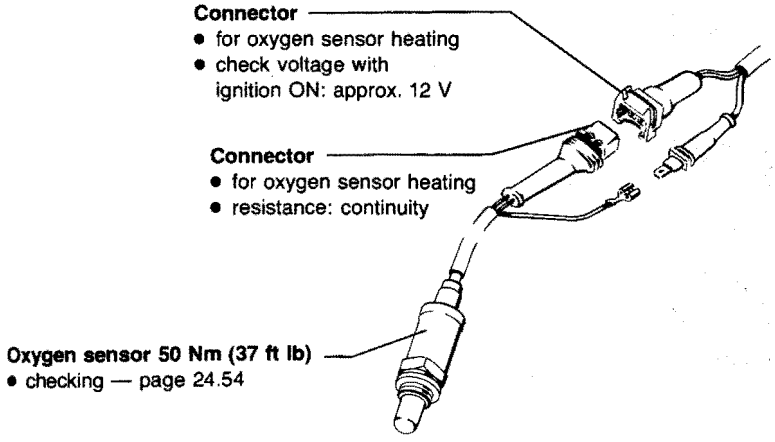
Connector
• for oxygen sensor heating
• check voltage with ignition ON: approx. 12 V
Connector
• for oxygen sensor heating
• resistance: continuity
Oxygen sensor 50 Nm (37 ft lb)
• checking — page 24.54

24-184

Idle checking

Note

It is important to follow the sequence when performing idle checking/adjusting.

— check timing, adjust if necessary
  - temperature sensor II disconnected
  - rpm — 2000-2500

— check idle speed and **CO** content, adjust if necessary
  - idle stabilization valve disconnected
  - (with ignition off) disconnect oxygen sensor

Note

The oxygen sensor must be disconnected with the ignition off, to cancel the memory in the Electronic Control Unit (ECU).

Test and adjustment conditions

— engine oil temp min. 80°C (176°F)
— all electrical consumers turned off (radiator fan should not be running while performing checks or adjustments)
— crankcase breather hose removed from oil vent and plugged
— throttle valve switch operating properly (closed when in idle position)
— ignition timing within specifications
— idle stabilizer operating properly (with ignition turned on, valve should vibrate and hum)

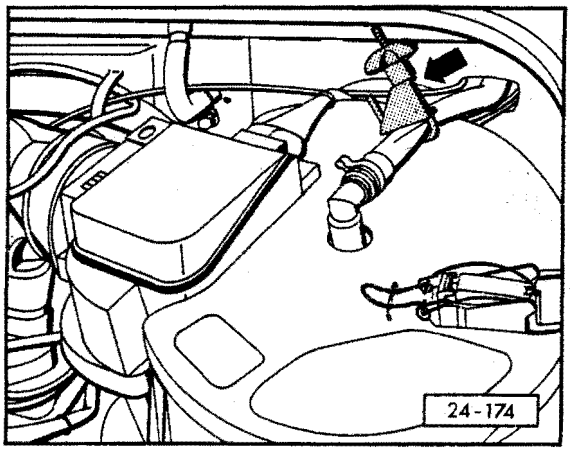

The hose from charcoal cannister to air filter must be pinched closed. See arrow

Connecting test equipment

WARNING

Ignition must be turned off when connecting test equipment.

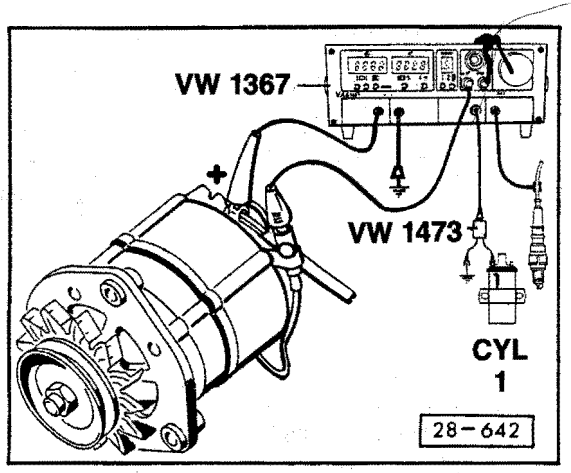

— connect **VW 1367** tester for ignition timing and rpm display functions
— using adapter **VW 1473**, connect tester **VW 1367** to terminal 1 of ignition coil

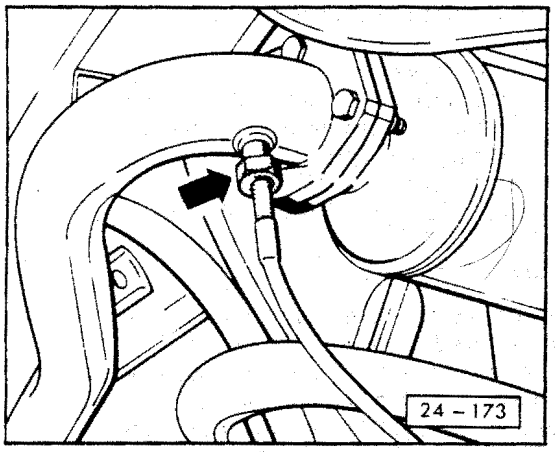

— connect **CO** tester to adapter on left exhaust pipe, using Sun tool **120.239**

Idle speed and CO content, checking and adjusting

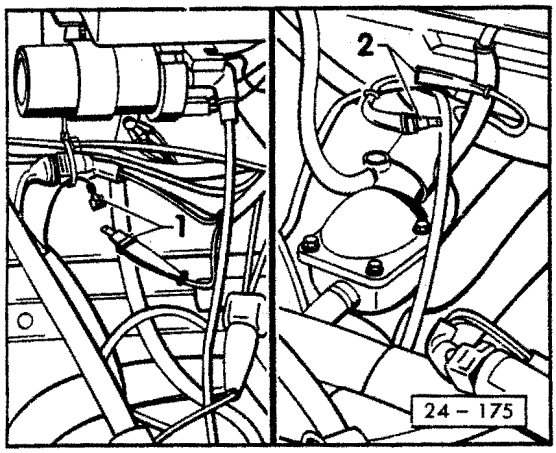

— with ignition switched off, disconnect oxygen sensor connector (**1**) and idle stabilizer control valve connector (**2**)

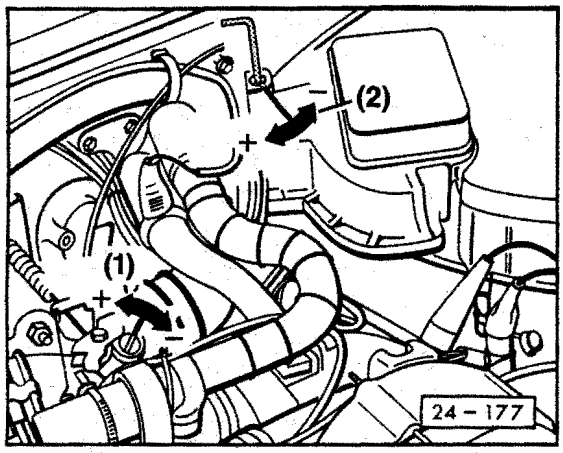

— check idle speed rpm, correct if necessary using adjusting screw (**1**)
- specification: 880 ± 50 rpm

— check **CO** content
- specification: 0.7 ± 0.4% vol.

For **CO** adjusting, remove screw cap as follows:
— drill **CO** adjusting screw cap using 2.5mm (0.098 in.) drill
— thread 3mm (0.137 in.) sheet metal screw into drilled hole
— grasp screw with pliers, pull out cap

Set idle speed and **CO** content by alternately turning adjusting screws (**1** and **2**) to obtain specifications
— reconnect oxygen sensor connector and idle stabilizer control valve connector
— let engine idle approx. 2 minutes
— check **CO** content, correct if necessary by repeating adjusting procedure

Idle speed/CO content, checking and adjusting, continued

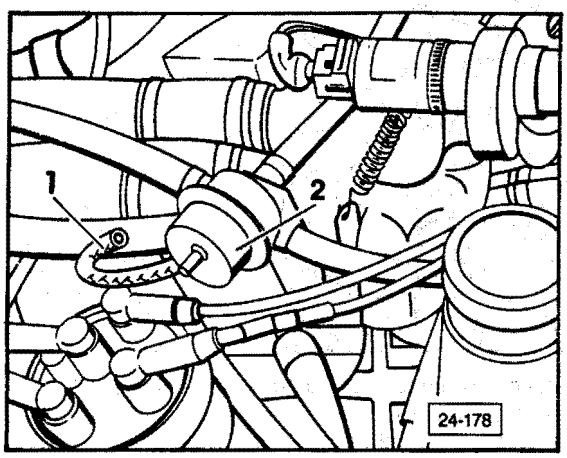

Check oxygen regulation function as follows:
— remove hose (1) from pressure regulator (2) and plug

CO should increase briefly, then drop in value.
— with ignition switched off, disconnect oxygen sensor
— restart engine, let idle
- **CO** content should correspond to chart according to elevation of workshop

Note

CO content is altitude dependent, refer to the following chart to compensate for the altitude of the workshop.

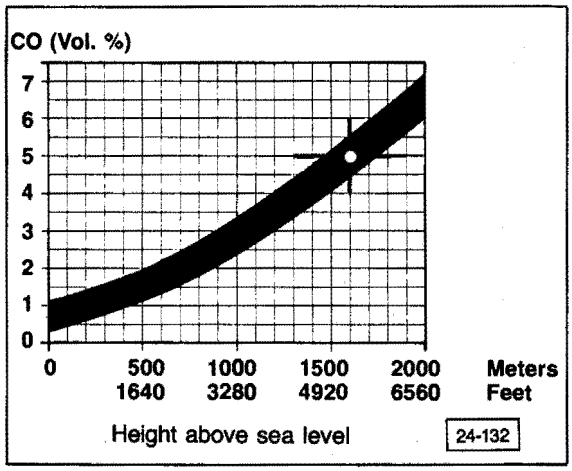

Example: At 1600 meters (approx. 1 mile) **CO** should be **5% ± .5%**

— with ignition switched off, re-connect oxygen sensor
— restart engine, let idle
- **CO** content must read within specifications: **0.3** to **1.1%** (not dependent upon elevation with sensor connected)

— adjust if necessary
— secure **CO** adjusting screw with new safety cap

Note

After adjusting, the hoses for the crankcase must be reconnected. If the control current and the CO content change, this is not due to an improper adjustment, but rather to oil dilution caused by short distance driving. With long distance drives, the amount of fuel in the oil will be reduced and the CO value will normalize again. A short-term solution would be an oil change.

Idle stabilizer, checking

1st check (function)

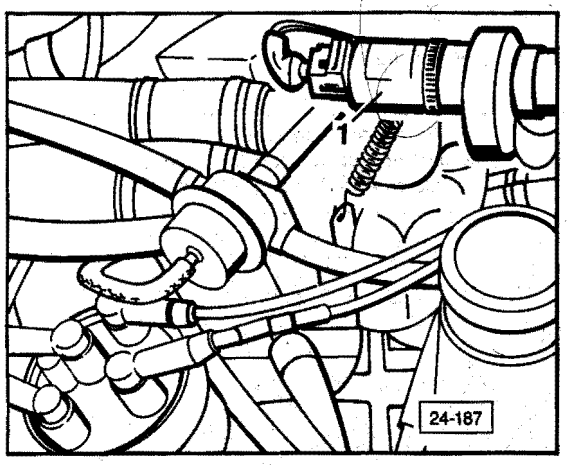

Note

Idle stabilizer triggering can vary depending upon specific vehicle wiring; however, in all cases the following functional check applies.

— start engine and let idle
- idle stabilizer valve **1** must vibrate and hum

If OK,
go ahead with 2nd check

If NO,
remove connector from valve **1** and check resistance of valve with multimeter US 1119
- specified value: display (continuity)

If specified value NOT obtained
— replace valve

If specified value IS obtained
— re-connect connector to valve and check electrical connections on control unit relay adapter (in front of right tail light) according to wiring diagram

If electrical connections OK
— replace idle stabilizer control unit

2nd check (regulator)

Requirements

Engine oil temperature min. 80°C

Electrical consumers turned OFF

No leaks in intake air system

Ignition timing OK

Idle rpm OK

CO-content OK

— remove crankcase breather hose and close tightly
— connect multimeter US 1119 with adapter VW 1315A/2 to idle stabilizer valve **1**
— let engine idle
- specified value: approximately 430 = 20 mA (fluctuating)

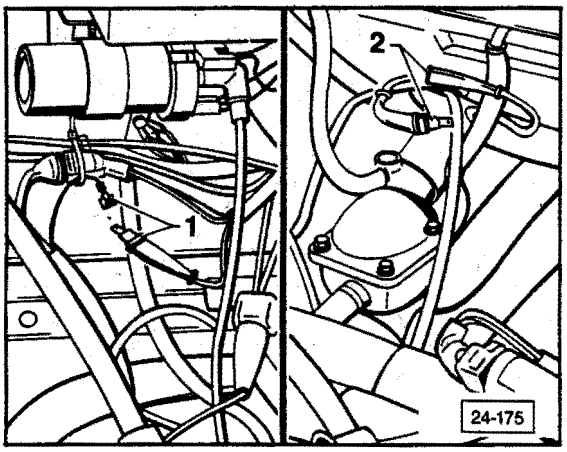

— Disconnect connector **2**
- specified value: approximately 430 mA constant

If test conditions have been met and specified values are NOT obtained
— replace idle stabilizer control unit

Oxygen sensor and oxygen regulation, checking

Engine code MV

Requirement

Engine oil temperature min. 80°C (176°F)

Note

There must be no leaks in the exhaust sytem between the cylinder heads and the catalytic converter.

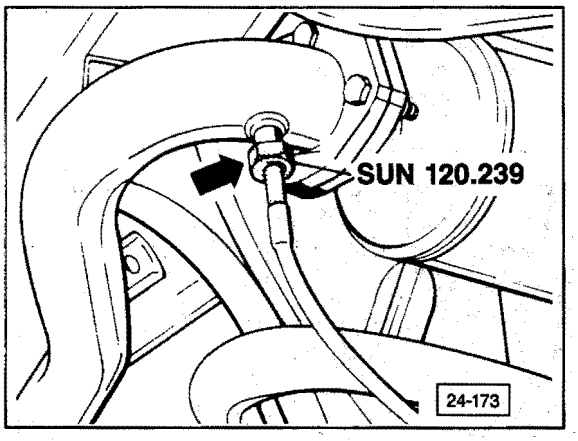

— connect CO test equipment hose to the sampling point on left exhaust pipe using Sun 120.239 adapter (**arrow**)

Test step I

— let engine run approximately 2 minutes at idle and read CO-content

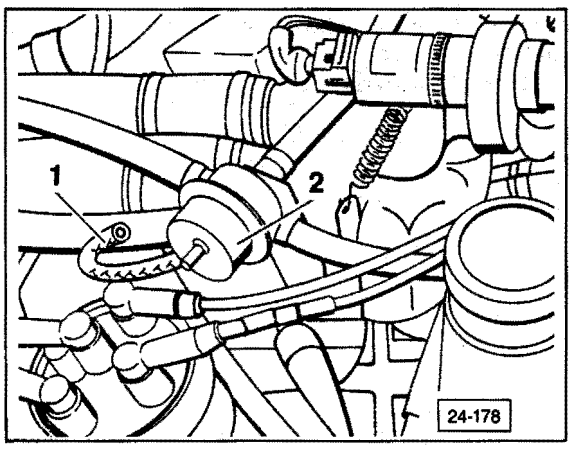

— oxygen sensor connected
— remove hose (**1**) from pressure regulator (**2**) and plug hose
- CO should increase briefly. then drop in value to 0.3-1.1%

If **NO**:
proceed to determine whether the problem is with the oxygen sensor or with the control unit

Test step II

— shut off engine

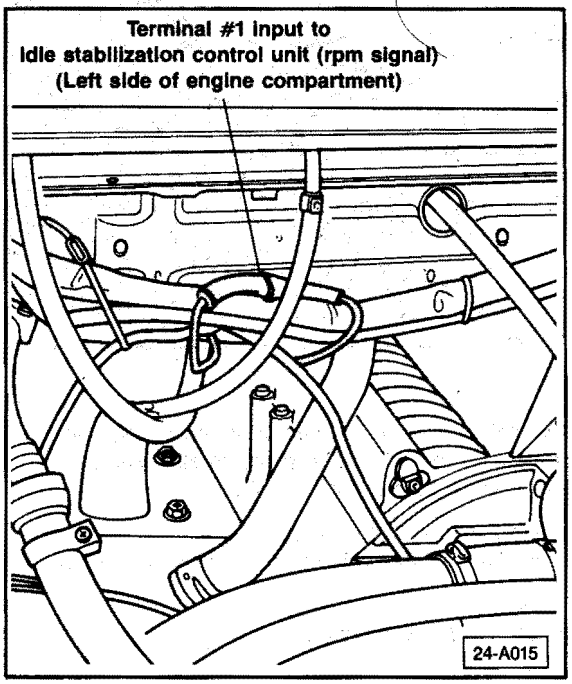

Note

As of 9-87 production this connection has moved to the right side of the engine compartment (in front of the air flow sensor).

— disconnect RPM signal wire
— disconnect oxygen sensor

Note

The oxygen sensor must be disconnected with the ignition **OFF** to cancel the memory in the control unit.

— start engine
— hold disconnected (green) oxygen sensor wire from the control unit to ground
- CO content must increase

If **NO**
— check wire connection on control unit, page 24.62 test step II

If **OK**
— replace control unit and recheck

Note

If test step I is not **OK** but test step II is **OK**, the oxygen sensor is defective.

Pressure regulator, checking

The pressure regulator regulates the fuel pressure in relation to the intake manifold pressure.

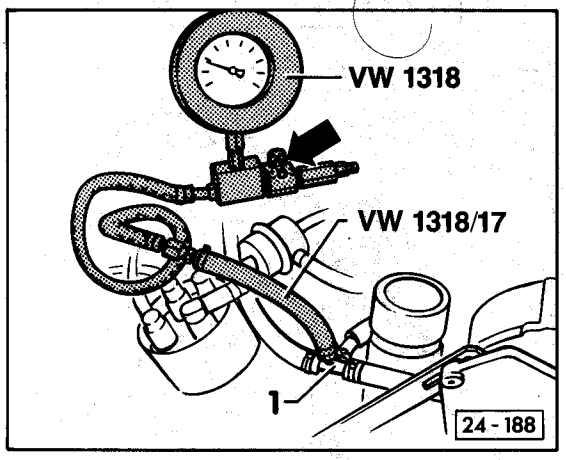

— connect pressure measuring equipment VW 1318 with adapter VW 1318/17 and hose to t-connection 1 of fuel line

CAUTION

The switch (**arrow**) on the pressure measuring equipment must remain closed during the measuring process.

— run engine at idle and measure fuel pressure
- specified values

bar (PSI)	vacuum hose on pressure regulator
approx. 2.0 (29)	connected
approx. 2.5 (36)	disconnected

continue with next column

Residual pressure, checking

— shut off engine and wait ten minutes
- 2.0 to 2.5 bar (29 to 36 psi)

If pressure value **NOT** obtained there are three possible causes

CAUTION

Use extreme care not to damage fuel lines when clamping.

— check fuel pump check valve by clamping off line from fuel pump
— check fuel pressure regulator by clamping off return line to tank
— check fuel injectors by clamping off lines from injectors to pressure regulator, if necessary go to page 24.56 to check injectors

In each of these cases, observe gauge pressure while clamping off the individual lines.

If the pressure drop ceases or slows dramatically, the problem is in the indicated component.

Fuel injectors, checking

Injector spray pattern, checking

— remove injectors in pairs, (connectors and fuel lines remain connected)
— disconnect connector from second pair of injectors



— operate starter briefly, observe spray pattern:
  • spray pattern must be cone shaped
— re-install injectors

Note

When installing, make sure seals **(1)** are present.

Checking for leaks

— disconnect all connectors from injectors
— remove injectors in pairs (fuel lines remain connected)
— switch ignition on for about 5 seconds
  • no more than 2 drops per minute per injector may leak out

Voltage supply, checking

CAUTION

Avoid short circuits at the connector terminals, otherwise the control unit can be damaged.

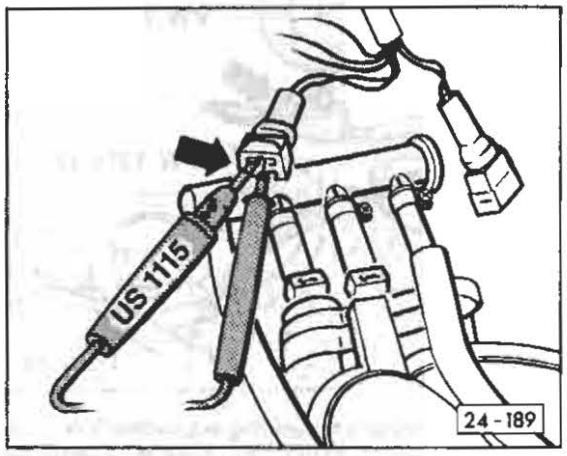

— remove all connectors from injectors and connect voltage tester US1115 on one connector (**arrow**)
— operate starter
  • LED must flicker

If NO

— see electrical checks, page 24.61, 24.62, test steps 1 and 5 or control unit defective

Intake air sensor, checking

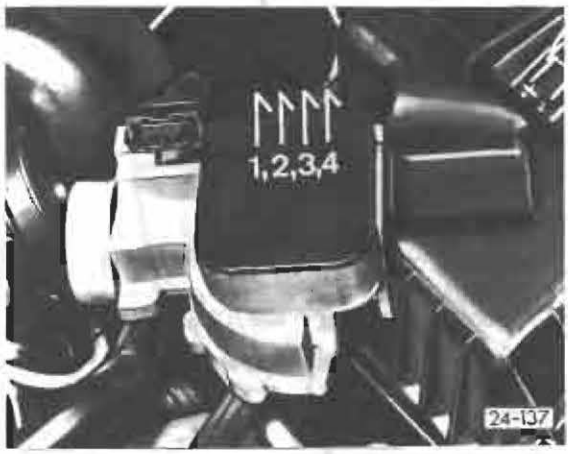

— remove connector and hose from intake air sensor and test with digital multimeter US1119 using adapter VW 1315A/1

Potentiometer, checking

— measure between terminals **3** and **4**
specified value: approx. 0.5-1.0 k
— move air sensor flap and measure resistance between terminals **2** and **3**
• specified value: resistance change

Intake air temperature sensor, checking (arrow)



— measure resistance between terminals **1** and **4**
• specified value:

20°C = 2.3 -2.7 k
over 20°C = Ω less
under 20°C = Ω greater
(20°C = 68°F)

Throttle valve switch, removing and installing

— remove throttle valve housing

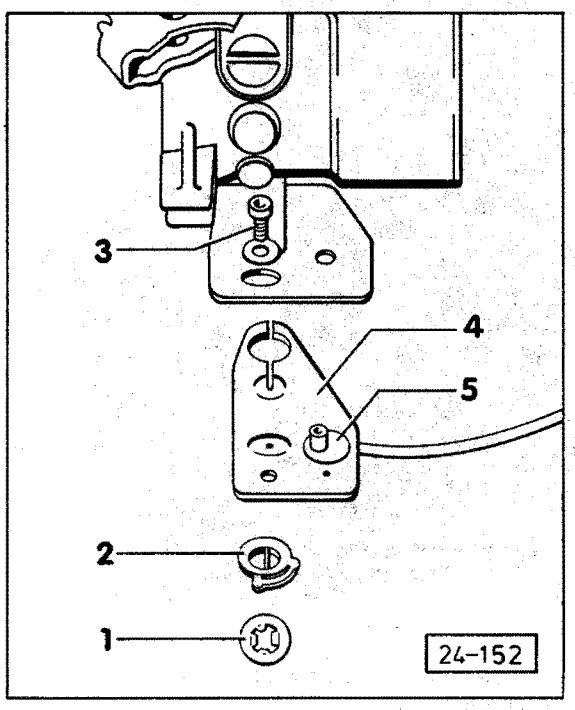

— remove throttle valve switch **4** in sequence numbered 1 to 5
— installation is reverse of removal

Throttle valve switch, checking and adjusting

Note

The throttle valve switch supplies the following information to the control unit:

Throttle valve closed

— injection quantity for idle
— switching off the injection quantity during deceleraton fuel shut-off
— ignition point setting in idle (DLS function)

Throttle valve completely open

— injection quantity for full throttle

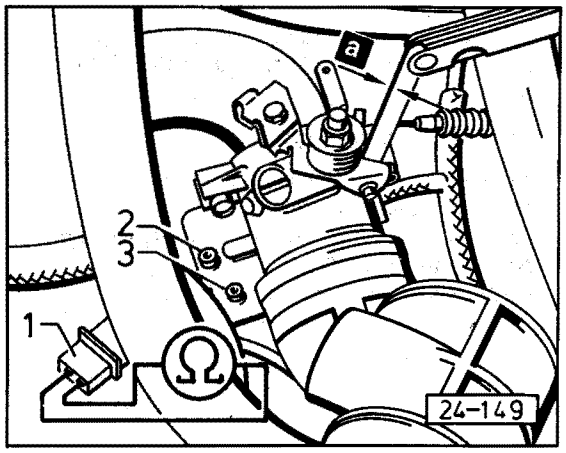

— check **continuity** of throttle valve switch at connector **1**
  - switch must display continuity only during idle and full throttle position of throttle valve switch

Throttle valve switch checking, continued

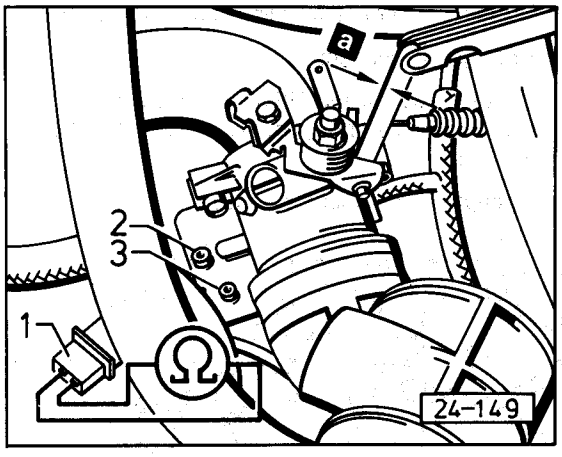

— open throttle valve and close slowly. While doing so, check **switching point** (continuity) of switch with feeler gauge at idle stop of throttle valve lever
  • switching point: gap (**a**) — 0.05-0.10 mm (0.002-0.004 in) before idle stop

— If necessary, adjust gap (**a**) with eccentric screw **3** (first loosen screw **2**)

Note

Proper adjustment is important.

If gap (**a**) too LARGE
— engine will surge when throttled slightly

If gap (**a**) too SMALL
— cold engine will stall out when given gas and warm engine will have NO fuel deceleration shut-off or DLS function at idle

Note

The limiting screw for basic throttle valve adjustment must **not** be changed.
If the screw is turned by mistake, it will be necessary to carry out a basic adjustment of the throttle valve page 24.37.

Throttle valve switch voltage, checking

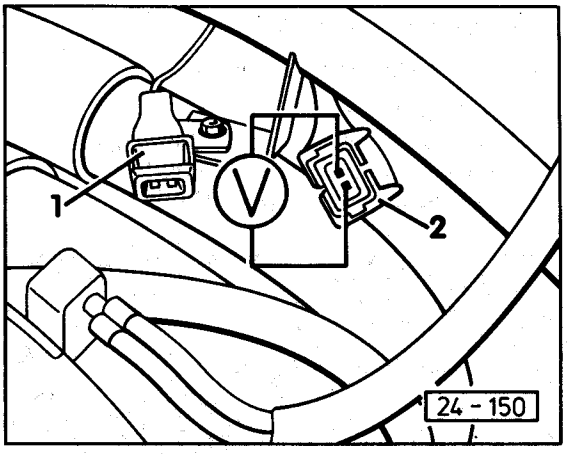

CAUTION

Do not connect test light to throttle valve switch connectors IF control unit is connected.

— disconnect connector **2** from connector **1** of throttle valve switch
— switch ignition ON
— measure voltage on connector **2**
  • specified value: approx. 5 volts

If NO
— check for break in wiring or control unit is defective

Deceleration fuel shut-off

Requirement

Engine oil temperature minimum 80°C

Fuel shut-off will occur only when:

- throttle is closed
- coolant temperature is above 50°C (122°F)
- engine speed is above 1250 RPM
- engine speed was above 2600 RPM

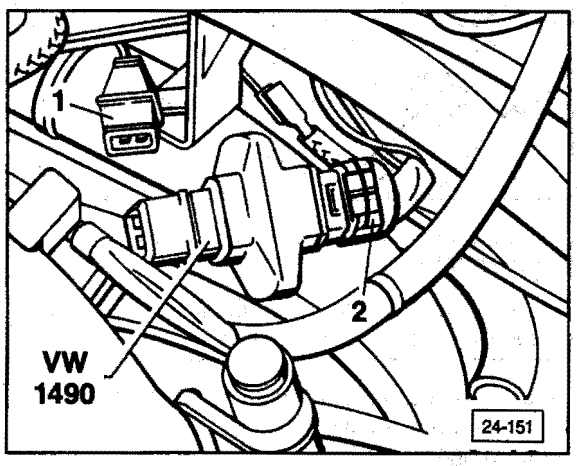

— bridge connections in connector **2** with ⌐ side of double adapter **VW 1490** and give **slight amount** of gas

- engine RPM must vary (surge, then deceleration fuel shut-off begins)
- break in wiring
- temperature sender for engine temperature defective
- control unit defective

Full throttle enrichment, checking

Requirements

Engine oil temperature minimum 80°C (176°F)

RPM gauge connected

CO tester connected (if catalytic converter present;) on sampling point using **Sun 120.239** adapter

— let engine idle about 2 minutes

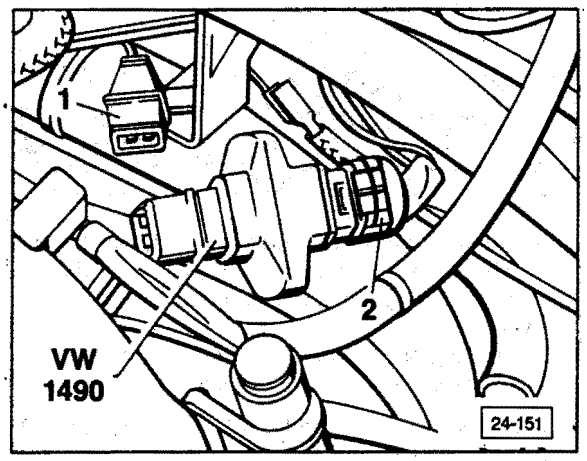

— remove connector **2** from connector **1** of throttle valve switch

— slowly increase engine speed to about 4500 RPM

- connections in connector **2** **not** bridged

— check CO and record

— bridge connections in connector **2** with ⌐ side of double adapter **VW 1490**

- CO must raise at least 1 vol.% over recorded value

If **NO**, check for

— break in wiring

— temperature sender for engine temperature defective

— control unit defective

Electrical testing — ignition and injection system

Requirements

Battery OK

Fuel pump and fuel pump relay OK

Idle stabilizer control unit OK

Note

Internal resistance of the test equipment and ambient temperature have a strong influence on test results, digital multimeter US1119 should be used to perform testing.

The specified values given are for ambient temperatures of 0° to +40°C (32°-104°F)

If the measured value deviates from the specified values, determine fault **according to current flow diagram.** Check wiring and connectors before replacing any parts.

CAUTION

To avoid damage to circuitry, switch to the proper measuring range **before** connecting the test leads.

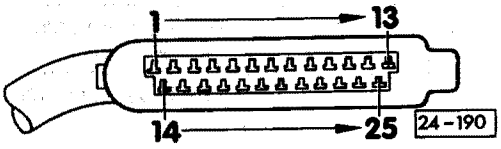

Measuring range: switch to **voltage measurement**				
Test step:	(Connector) terminal:	To test	Test conditions, additional steps:	Specified values:
1	13 + 14 14 + 19	control unit voltage supply	switch ignition ON	approx. battery voltage
2	13 + 25	wire to ignition coil terminal **1**	ignition switched ON	approx. battery voltage
3	1 + 13	wire from starter terminal **50** and from adapter for idle stabilizer control unit terminal **50**	Disconnect connector from injectors. Operate starter (selector switch in P or N)	min. 8 V
4	bridge 3 + 13	wire to fuel pump relay	ignition switched ON	fuel pump must run audibly

Requirements

Switch ignition OFF

Measuring range: switch to **resistance measurement** Ω

Test step:	(Connector) terminal:	To test	Test conditions, additional steps:	Specified values:
5	12 + 14	injectors	connect **only one** injector at a time	15-20 Ω
6	6 + 10	temperature sender for engine temp		see diagram, page
7	6 + 11	throttle valve switch	throttle valve:	
			• closed	continuity
			• slightly open to shortly before full throttle	∞ Ω
			• completely open	continuity
8	6 + 17	intake air sensor potentiometer		0.5 - 1.0 k Ω
	17 + 21		move air flow sensor	change in resistance
9	6 + 9	intake air temperature sender in intake air sensor		see diagram, page 24.45
10	6 + 8	wiring to Hall sender	remove connector from Hall sender and bridge all three connectors	continuity
	6 + 18			
11	2 + 13	wiring to oxygen sensor	disconnect connector to oxygen sensor and hold green wire to ground (−)	continuity
			re-connect oxygen sensor wiring	∞ Ω

Note

For additional tests of ignition parts of the digifant system as well as Hall sender test see Repair Group 28.

Exhaust System–Emission Controls

Quick Data

Index

Air-cooled AFC
—California 26.3
1981 26.4
—USA and Canada except California 26.2
EGR valve 26.5
—Catalytic converter checking 26.11

Diesel
—Assembly 26.6

Water-cooled Digijet
—Assembly 26.7
—Oxygen sensor 26.8
—Catalytic converter checking 26.11

Water-cooled Digifant
—Assembly 26.9, 26.10
—Catalytic converter checking 26.11

Note

Always replace gaskets, seals and self-locking nuts. Tighten all M8 bolts and nuts to **20 Nm (14 ft lb)**

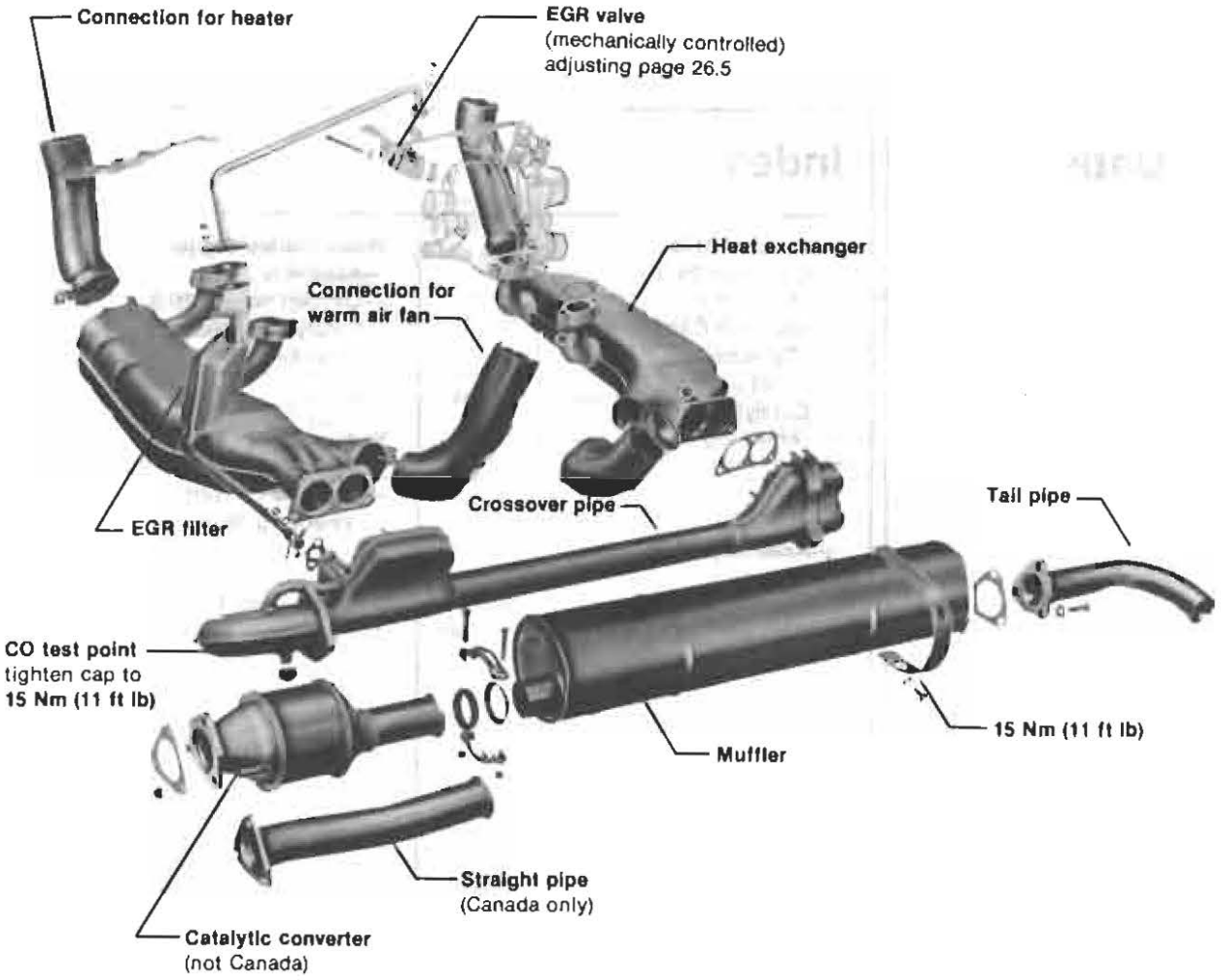

Note

Always replace gaskets, seals and self-locking nuts. Tighten all M8 bolts to **20 Nm (14 ft lb)**

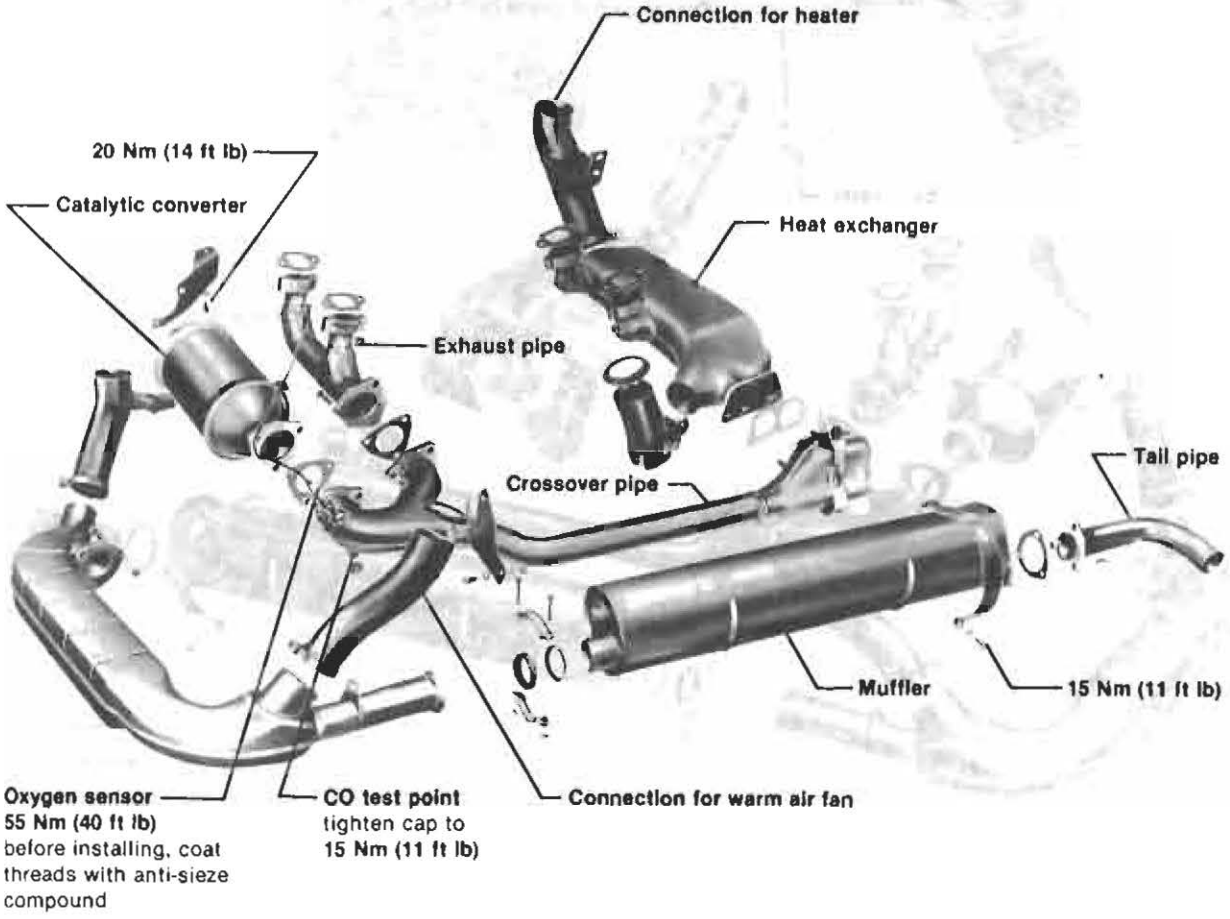

26-313

Modified and additional parts – EGR system (California 1981)

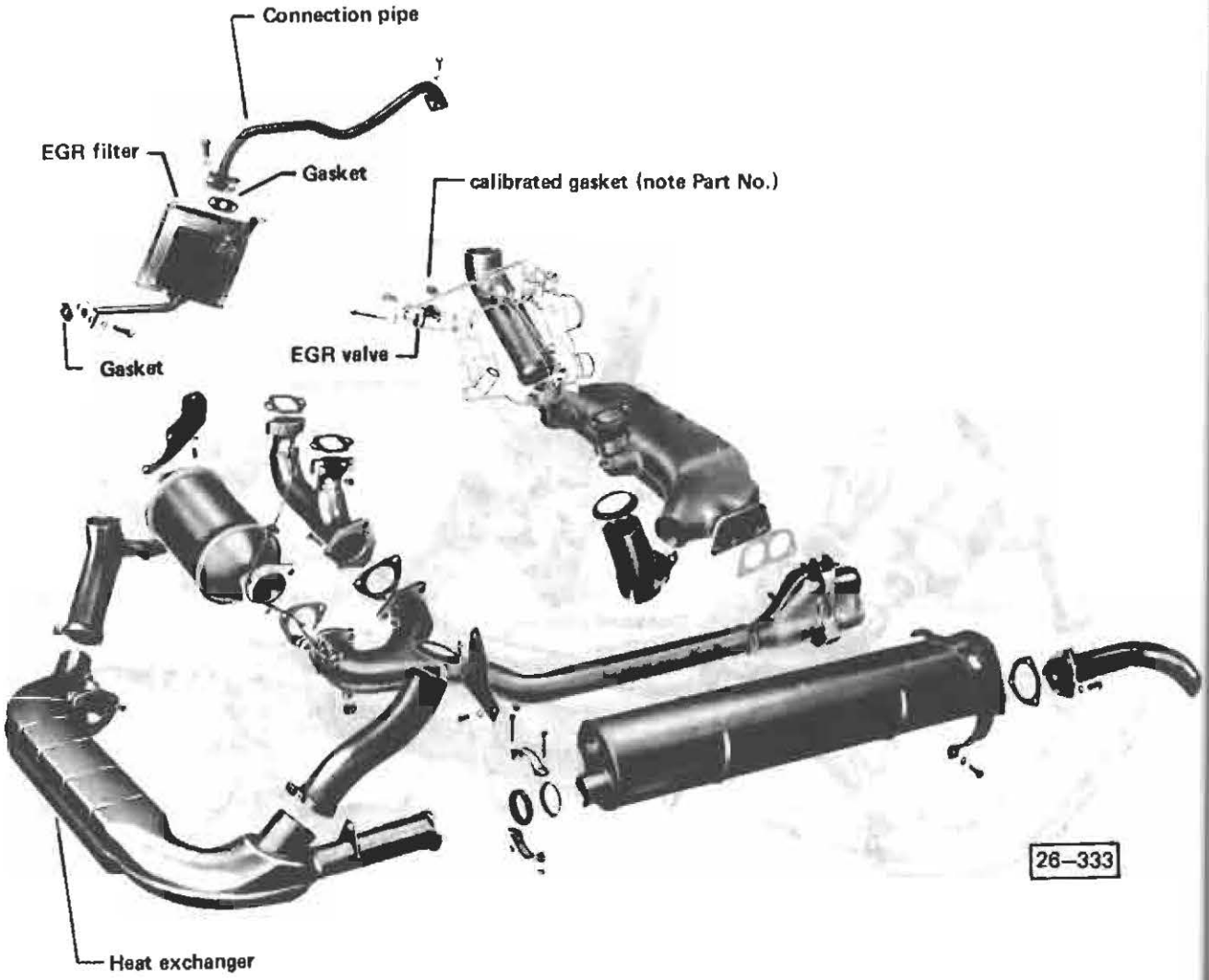

EGR valve, checking

Work sequence

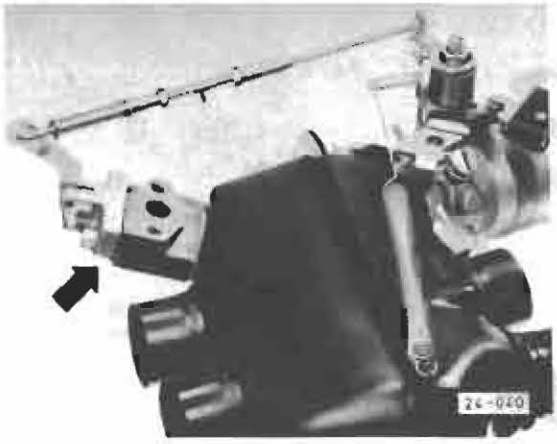

Note

EGR valve (arrow) is operated mechanically by throttle valve lever

Checking in idle speed position

— run engine at idle
— check pipe to EGR valve
  • pipe should **not** warm up

Checking in full throttle position

— disconnect rod for EGR valve
— run engine at idle
— push lever on EGR valve to full throttle position
— check pipe to EGR valve
  • pipe should **not** warm up

ERG valve, adjusting

Work sequence

— run engine at idle
  • manual transmission: 800-950 RPM
  • automatic transmission: 850-1000 RPM

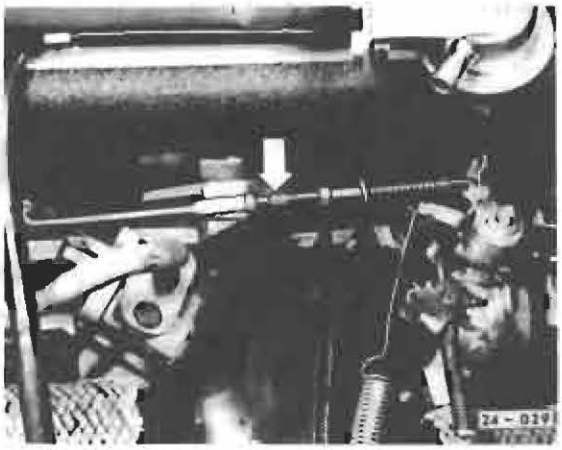

— shorten rod by turning hex (arrow) until idle speed drops suddenly (valve opens)
— turn rod in opposite direction
  • manual transmission 1 1/16 turns
  • automatic transmission 5/6 turns

Note

Use pin in hex as reference mark when adjusting

— tighten lock nuts

Note

Always replace self locking nuts

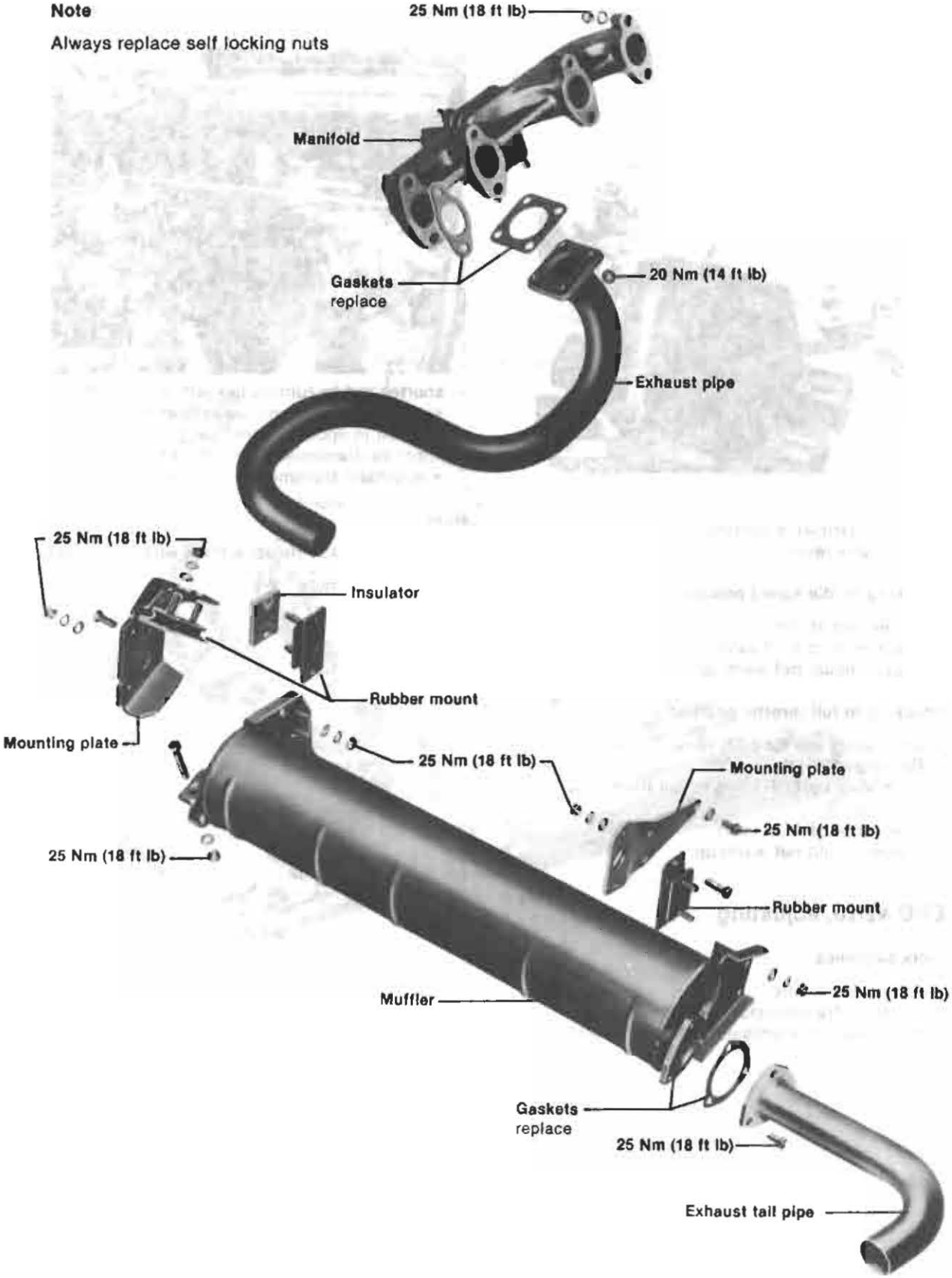

Note

Always replace gaskets, seals and self-locking nuts. Tighten all M8 bolts to **20 Nm (14 ft lb)**

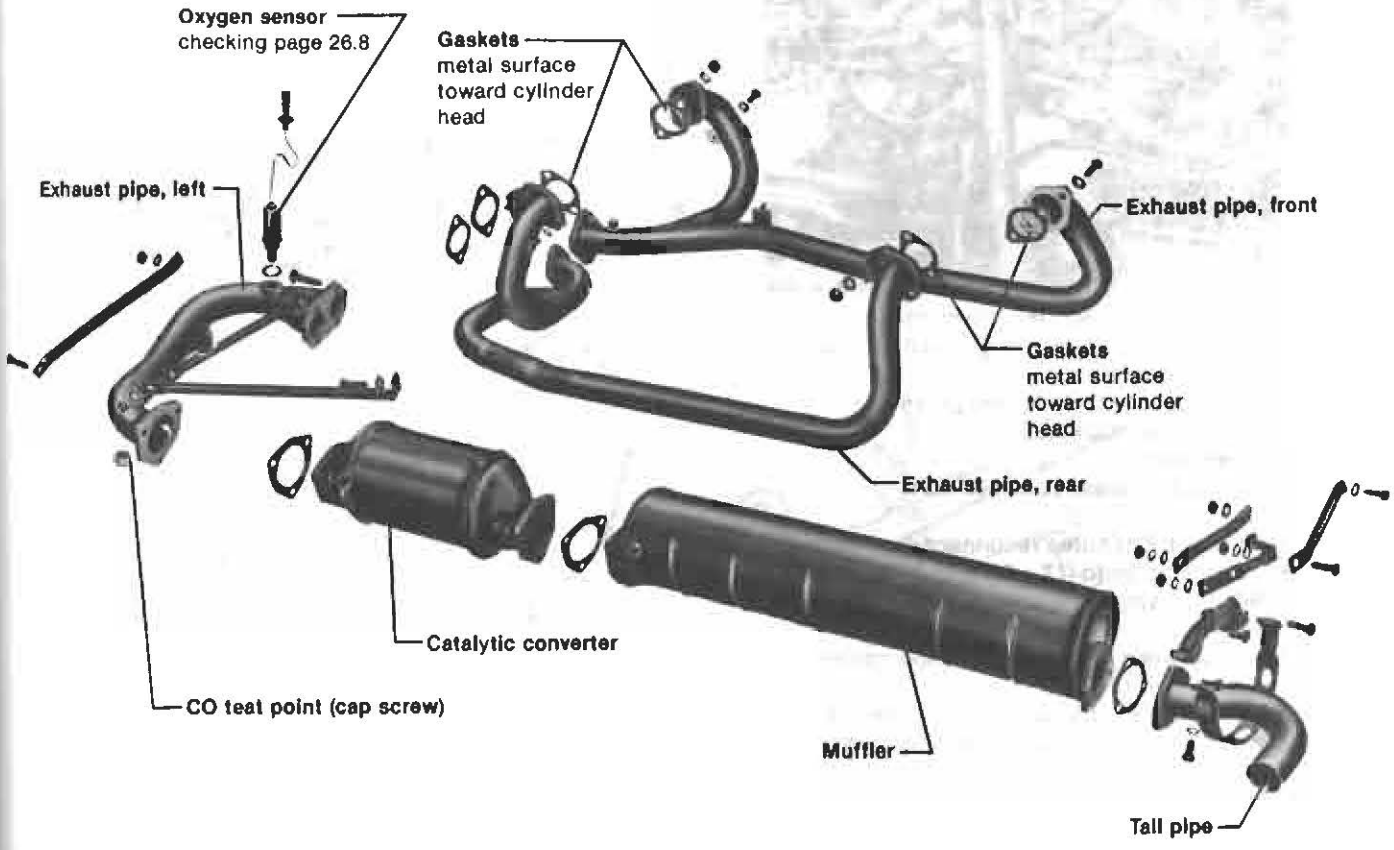

26-375

Oxygen sensor, checking

Preliminary condition:

- engine oil temperature at least 60 °C (140 °F)

Work sequence

— connect CO meter to test receptacle on exhaust pipe (left side)

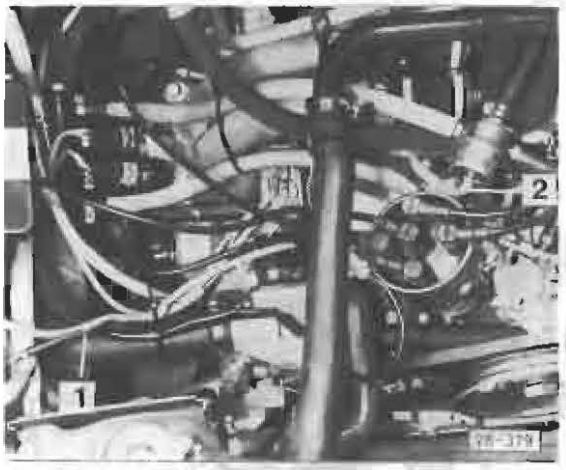

— with ignition turned **OFF**, disconnect connection **1** between oxygen sensor and control unit
— pull off vacuum hose **2** from pressure regulator and block hose
— start engine
  • CO must increase to above 1.5%

— after about 2 minutes reconnect connection **1**
  • CO must drop to 0.7 ± 0.4%
  If NO, following components may be defective:
  • wire between oxygen sensor and control unit or control unit
— check wiring by disconnecting connection **1** again and ground wire end coming from control unit
  • CO must increase
  If OK, oxygen sensor must be defective or leak in exhaust system between catalytic converter and cylinder head

Exhaust system components, removing and installing

- replace gaskets
- replace self-locking nuts
- tightening torque for screws and nuts: 25 Nm (18 ft lb)

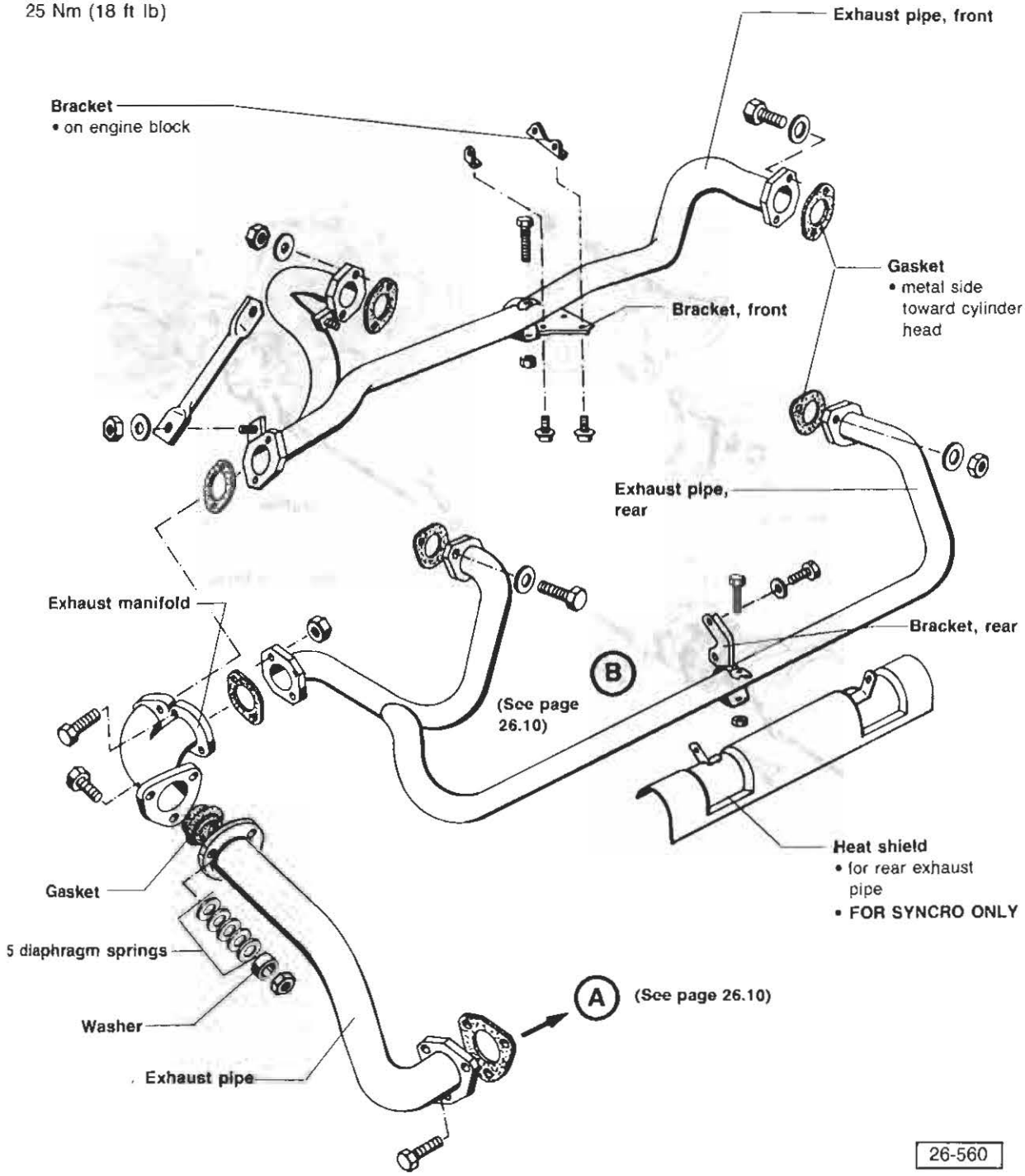

Exhaust system components, removing and installing
Continued

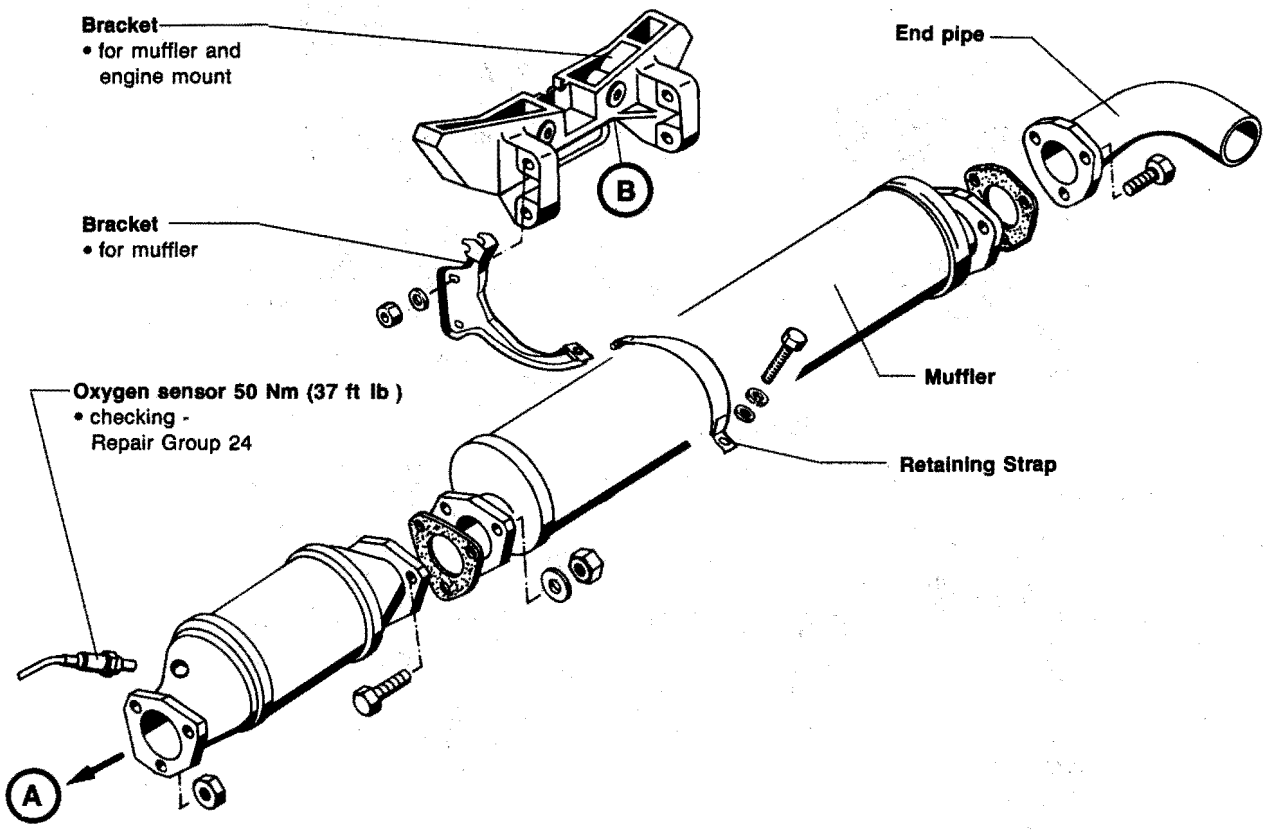

Catalytic converter

- replace gaskets
- replace self-locking nuts
- tightening torque for screws and nuts: 25 Nm (18 ft lb)

26-552

Catalytic converter, checking

Converter replacement can become necessary if the ceramic insert loosens

If exhaust "rattles"
— check that exhaust flanges are tight

If "rattle" was not due to loose exhaust flanges, converter may have failed

If exhaust system is tight
— remove catalytic converter
— look through both flange openings against light

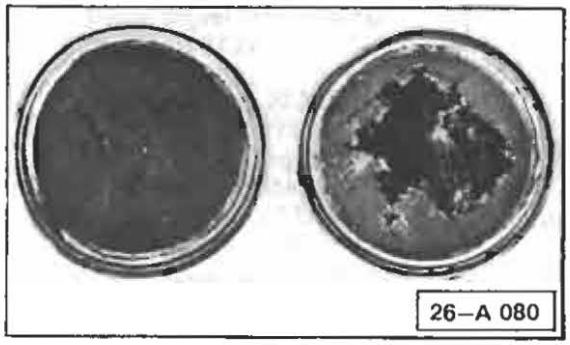

If ceramic insert appears broken or melted as shown, converter has failed

If ceramic insert appears **OK**, check if ceramic insert is firmly seated in converter housing

Check as follows:

— while holding converter vertically, firmly tap flange onto solid wood from a distance of 20 cm (8 in.)

— turn converter over and firmly tap other flange as before

If no knocking sound converter is **OK**

If no movement of the ceramic insert, converter is **OK**

If light knocking sound is heard inside converter, ceramic insert is loose and converter has failed

CAUTION

Avoid the following conditions on vechicles equipped with catalytic converters

- usage of leaded gasoline
- turning off the engine with the vehicle in motion
- excessive prolonged cranking with an intermittent firing of a flooded engine
- prolonged operation under load with a misfiring engine

Index

Alternator
—Alternator/Regulator, checking 27.18
—Heater blower fan, removing/replacing 27.22
—Indicator light, troubleshooting 27.23, 27.24
—Mount adjusting 27.22
—Removing/Installing 27.15
—Repairing (45A, 65A) 27.16
—Repairing (90A) 27.17
—System layout 27.19
—V-belt, adjusting 27.21
—V-belt, replacing 27.21
—Voltage regulator 27.20

Battery
—Charging 27.5, 27.6
—Checking 27.4, 27.6
—Electrolyte level 27.4
—Filler caps 27.7
—Location(s) 27.8, 27.9
—Nomenclature 27.2, 27.3
—Safety precautions 27.4
—Troubleshooting 27.10

Cruise Control
—System, repairing 27.25
—Troubleshooting 27.29

Starter
—Installing 27.14
—Removing/installing (Syncro) 27.13a, 27.13b
—Repairing 27.11
—Troubleshooting 27.12, 27.13

Battery, checking and charging

Battery — checking electrolyte specific gravity — Page 27.4, 27.5
Battery — checking voltage, Page 27.5
Battery — charging — Page 27.5
Troubleshooting guide — battery discharges itself — Page 27.10

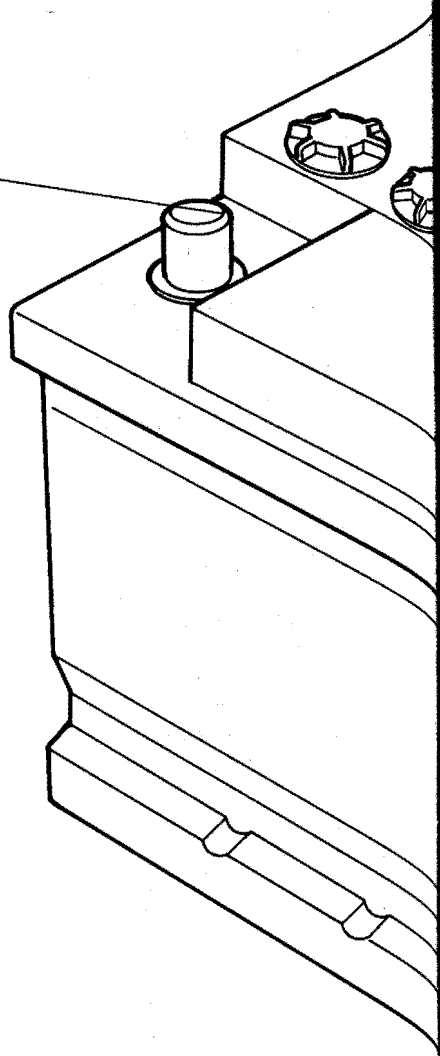

CAUTION

Before beginning repairs on the electrical system, disconnect battery ground strap.

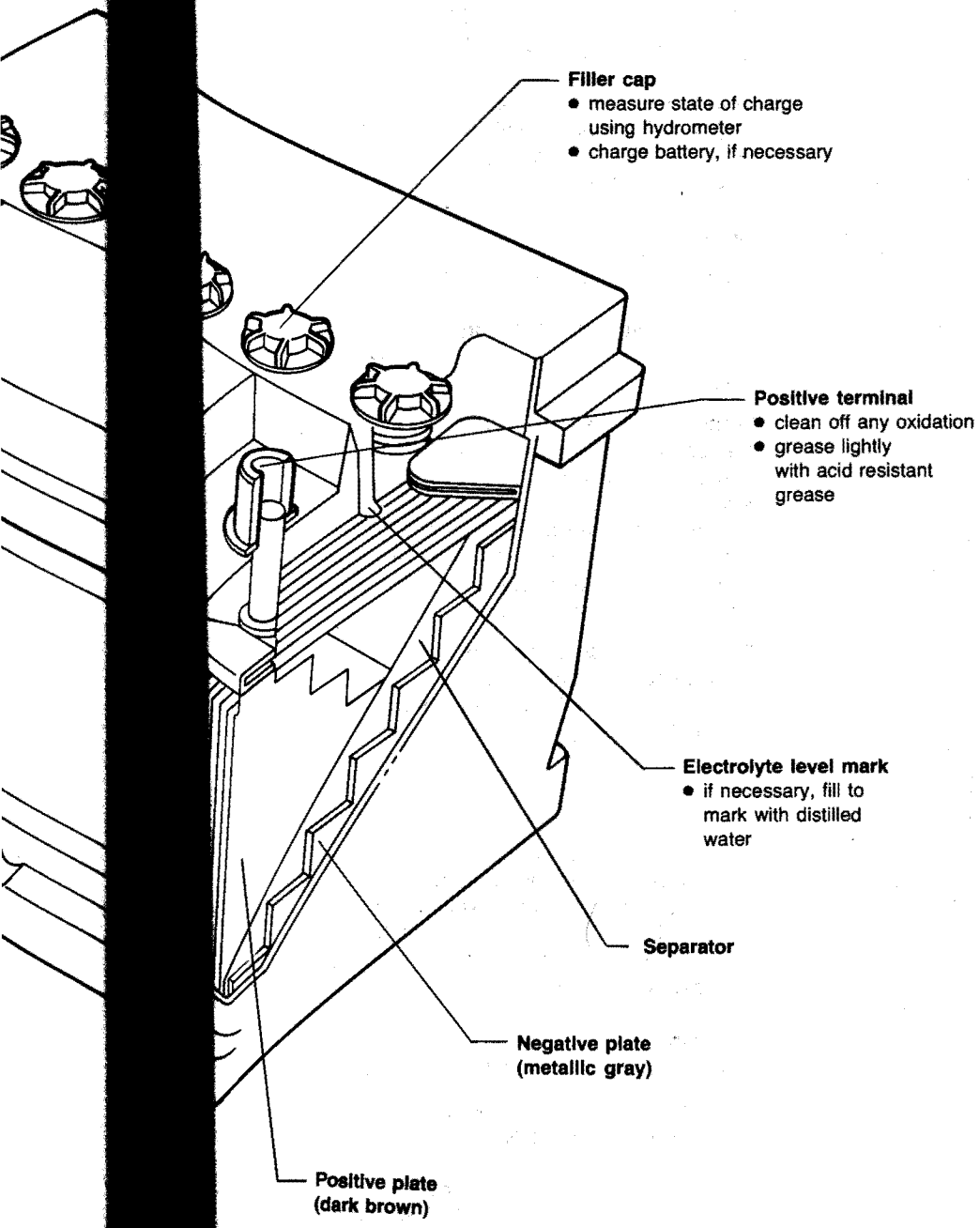

27-403

Battery

Battery precautions

WARNING

Battery acid can cause severe burns. When working with electrolyte always wear goggles, rubber gloves, and apron. If electrolyte is spilled on skin or clothing, flush at once with large quantities of water. If it gets into eyes, immediately flush with large quantities of water for several minutes and call a doctor.

Batteries produce explosive gases. Keep flames and sparks away from batteries. Do not smoke near batteries

Battery, jump starting

- car with good battery must not be running when connecting jumper cables

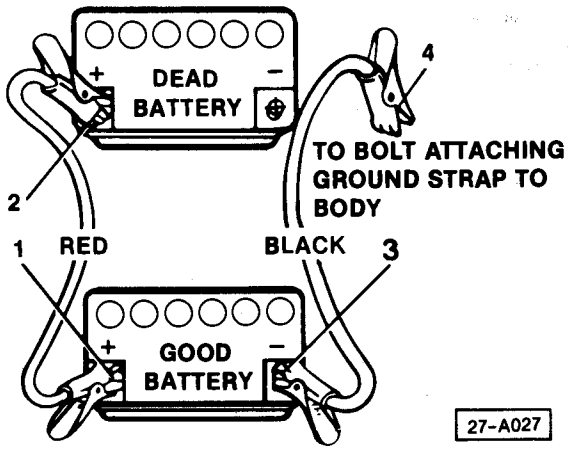

— connect jumper cables in following order:
- 1 — one end of positive cable to + post of good battery
- 2 — other end of positive cable to + post of dead battery
- 3 — one end of negative cable to − post of good battery
- 4 — other end of negative cable to bolt attaching ground strap to body

— start car which has good battery first
— next start car which has dead battery
— disconnect jumper cables in reverse order

Battery electrolyte level, checking

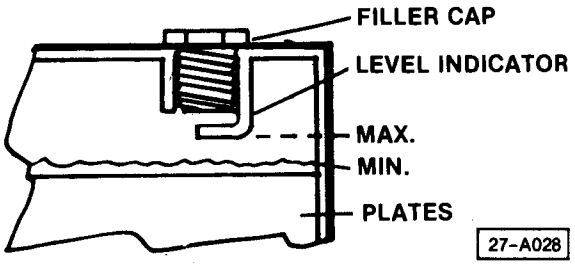

— check that electrolyte covers battery plates (including separators) by 5 mm (1/4 in.)
— check battery electrolyte level indicator on side of battery

Note

Only use distilled water when refilling battery

Battery condition, checking

Note

Weak battery can be caused by:
- alternator belt slipping (replace belt when glazed)
- ground straps corroded, loose or broken
- alternator or voltage regulator defective
- alternator warning light bulb burned out
- poor ground connection between warning light socket and circuit board

Battery terminals and cables should be coated with grease or petroleum jelly and, if necessary, cleaned to prevent corrosion and ensure good connection

Visual checks

— check for
- cracked or leaking case
- loose or corroded terminals
- low electrolyte level. If electrolyte is low, refill with distilled water and fast charge battery for several minutes after cells begin gassing (boiling)

Hydrometer test
(for batteries with removable caps)

— test electrolyte in all cells
- average specific gravity should be at least 1.225

— correct for electrolyte temperature if necessary
- for every 10°F **above** 80°F **add** .004 to hydrometer reading
- for every 10°F **below** 80°F **subtract** .004 from hydrometer reading

— if specific gravity is **above** 1.225, load test battery

— if specific gravity is **below** 1.225, recharge battery
— if specific gravity varies by more than .050 between cells, replace battery

Specific gravity	% of charge
1.265	100%
1.225	75%
1.190	50%
1.155	25%
1.120	0%

CAUTION

Do not expose fully discharged battery to freezing temperature because battery will be damaged by freezing

Voltage test—engine not running (for sealed batteries only)

— turn headlights on high beam for 1 minute to remove surface charge
— disconnect battery ground strap
— check battery voltage with an **accurate** voltmeter
  • voltage should be at least 12.4 volts
— if battery is **above** 12.4 volts, load test battery
— if battery is **below** 12.4 volts, charge battery until voltage is at least 12.4 volts

Voltage	% of charge
12.6 or more	100%
12.4	75%
12.2	50%
12.0	25%
11.7 or less	0%

Load test

Note

Before load testing, battery must be at least 75% charged

— connect load tester according to manufacturer's instructions
— load battery to 3 times amp/hour rating **or** 1/2 0°F cold cranking current rating
— wait 15 seconds and read voltage
  • battery voltage at room temperature should be at least 9.6 volts
— if battery voltage at room temperature is below 9.6 volts, replace battery
— if battery is colder than room temperature, voltage under load will be lower. Use table below if cold battery must be tested

Approx. electrolyte temp. °F (°C)	Minimum acceptable voltage under load
60 (16)	9.5
50 (10)	9.4
40 (4)	9.3
30 (– 1)	9.1
20 (– 7)	8.9
10 (– 12)	8.7
0 (– 18)	8.5

Battery charging

WARNING

Gases given off during charging are explosive. Do not smoke or allow sparks or flame near a charging battery.

Battery charger must be turned off when connecting or disconnecting cables on battery

CAUTION

Do not allow battery voltage to exceed 17 volts. If battery begins gassing (boiling) violently when charging, reduce charging rate. Do not disconnect battery while engine is running

Note

Follow battery charger manufacturer's instructions. Before testing a battery that has been charged, load battery with 15 amps for 1 minute to remove surface charge

Battery with removable caps

If battery level is low and water is added, fast charge battery for a few minutes after battery begins gassing (boiling). Slow charging current should be approximately 10% of battery capacity. Fast charging should be approximately 80–90% of battery capacity. Remove cell caps while charging

— charge battery according to following table:

Specific gravity	Fast charge up to
1.150 or less	1 hour
1.150 to 1.175	3/4 hour
1.175 to 1.200	1/2 hour
1.200 to 1.225	1/4 hour
above 1.225	slow charge **ONLY** to 1.250–1.280

Sealed batteries

Only **slow** charge sealed batteries. Sealed batteries, sometimes called "maintenance free," will not accept high rate of charge, making it necessary to charge it for up to twice as long as battery with removable caps. Also, voltmeter reading will not increase as rapidly as when charging battery with removable caps

WARNING

Battery acid can cause severe burns. When working with electrolyte always wear goggles, rubber gloves, and apron. If electrolyte is spilled on skin or clothing, flush at once with large quantities of water. If it gets into eyes, immediately flush with large quantities of water for several minutes and call a doctor.

Batteries produce explosive gases. Keep flames and sparks away from batteries. Do not smoke near batteries

CAUTION

Before working on any part of electrical system disconnect battery ground strap.

Never run alternator with battery disconnected

Battery, removing

— disconnect battery ground strap from negative terminal of battery, not from body
— disconnect positive terminal from battery
— remove battery hold-down (note number of shims)
— remove battery

Note

Special bolt is used to attach ground strap to body. If bolt has been loosened, it must be removed and cleaned free of paint and undercoating. Mounting area must also be cleaned free of paint and undercoating. After installing, coat bolt and mounting area with corrosion resistant material

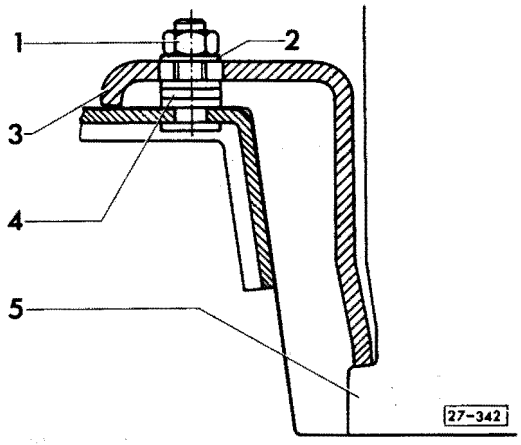

Battery, installing

1 = nut, tighten to **10 Nm (7 ft lb)**
2 = washer
3 = bracket
4 = shims (note number)
5 = base of battery case

Note

Bracket must press on base of battery case

Battery filler cap (new style)



Filler cap, removing

— cut filler cap skin at notch (**arrow**) with pocket knife or sharp edged screwdriver



— insert suitable screwdriver into slot
— turn upper part of filler cap counter-clockwise to stop
— remove filler cap

Filler cap, installing

— install new type of filler cap in same manner as old type filler cap

Battery location

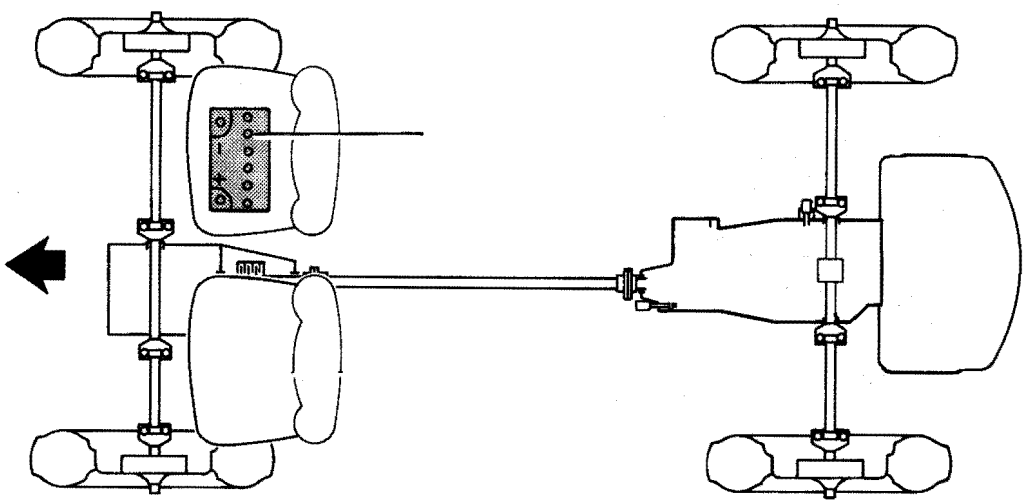

Fig. 1 Battery location

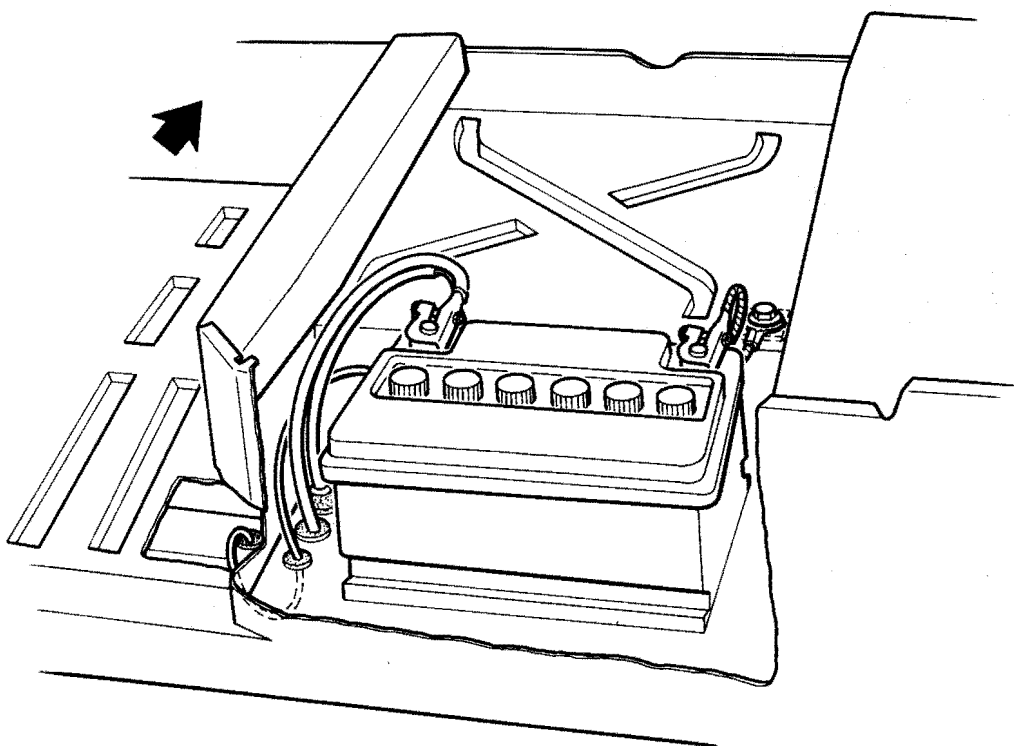

Fig. 2 Installation detail (under right front seat)

Battery locations, for non-propane refrigerator equipped Camper (P21)

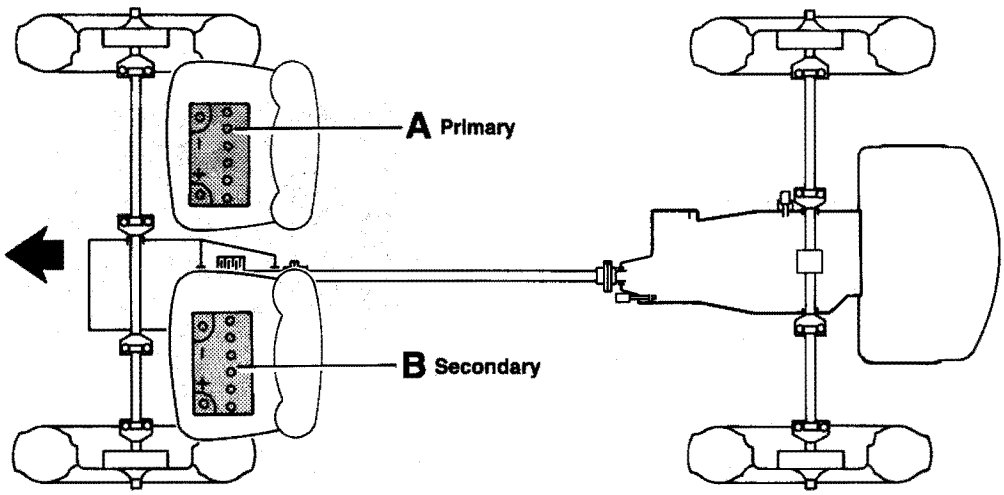

Fig. 3 Battery locations

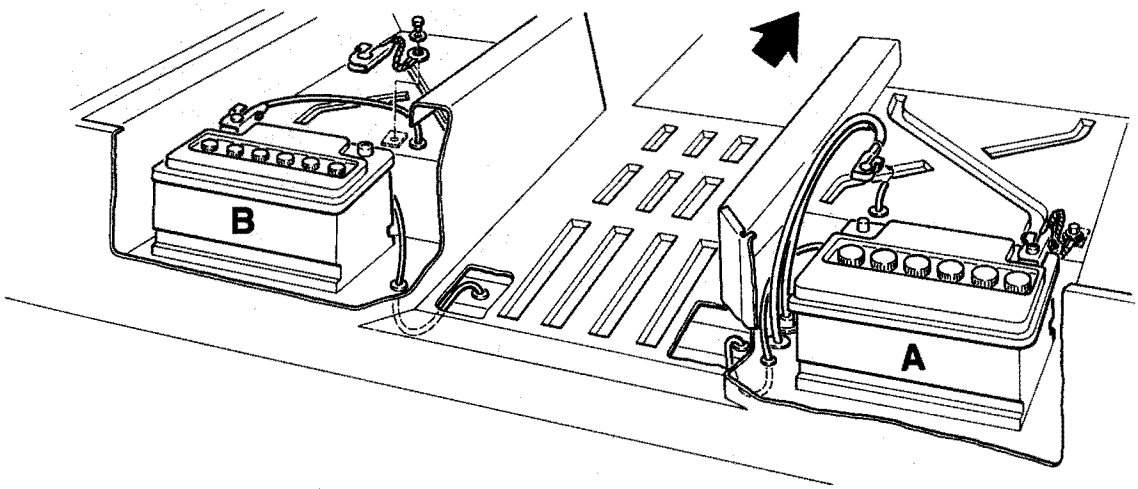

Fig. 4 Installation detail (under front seats)

Battery discharges—troubleshooting
current draw suspected

Test conditions
fully charged battery
clock disconnected

Battery discharges

Possible causes:
corroded and fouled contacts
chafed-through wirings
internal short-circuits in electrical equipment

— disconnect battery ground (–) strap
— connect test light between negative (–) battery terminal and ground (–) strap
— turn off all electrical consumers
— close all doors

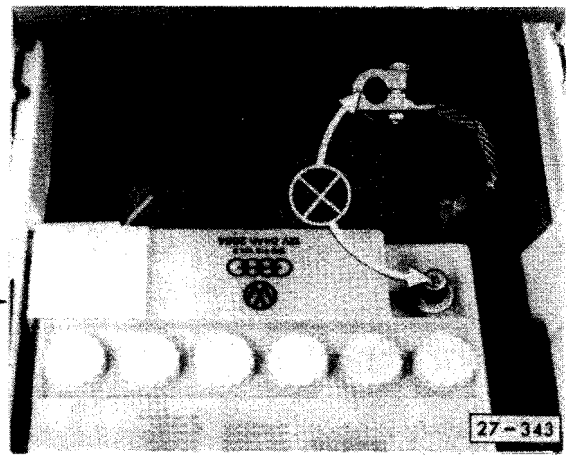

Test light lights up

— eliminate individual circuits by removing fuses
— if test light goes out in one of interrupted circuits, source of fault is to be found there

Test light does not light up

— in place of test light, connect ammeter (measuring range 0 – 200 Amp.) between negative (–) battery terminal and battery ground strap
— reduce measuring range until a clear reading is shown (1 – 3 mAmp is permitted)

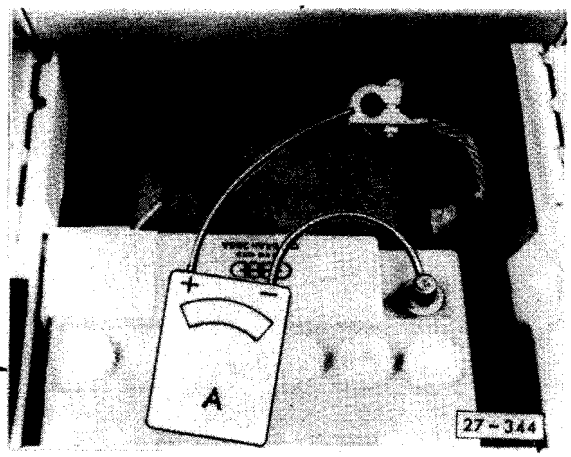

— eliminate individual circuits by removing fuses
if reading drops to zero in one of interrupted circuits, source of fault is to be found there

• if no faults are found in fused circuits, disconnect wiring connectors from nonfused components:
alternator
starter
ignition system
cluster instruments
coolant fan and so on

Starter, repairing

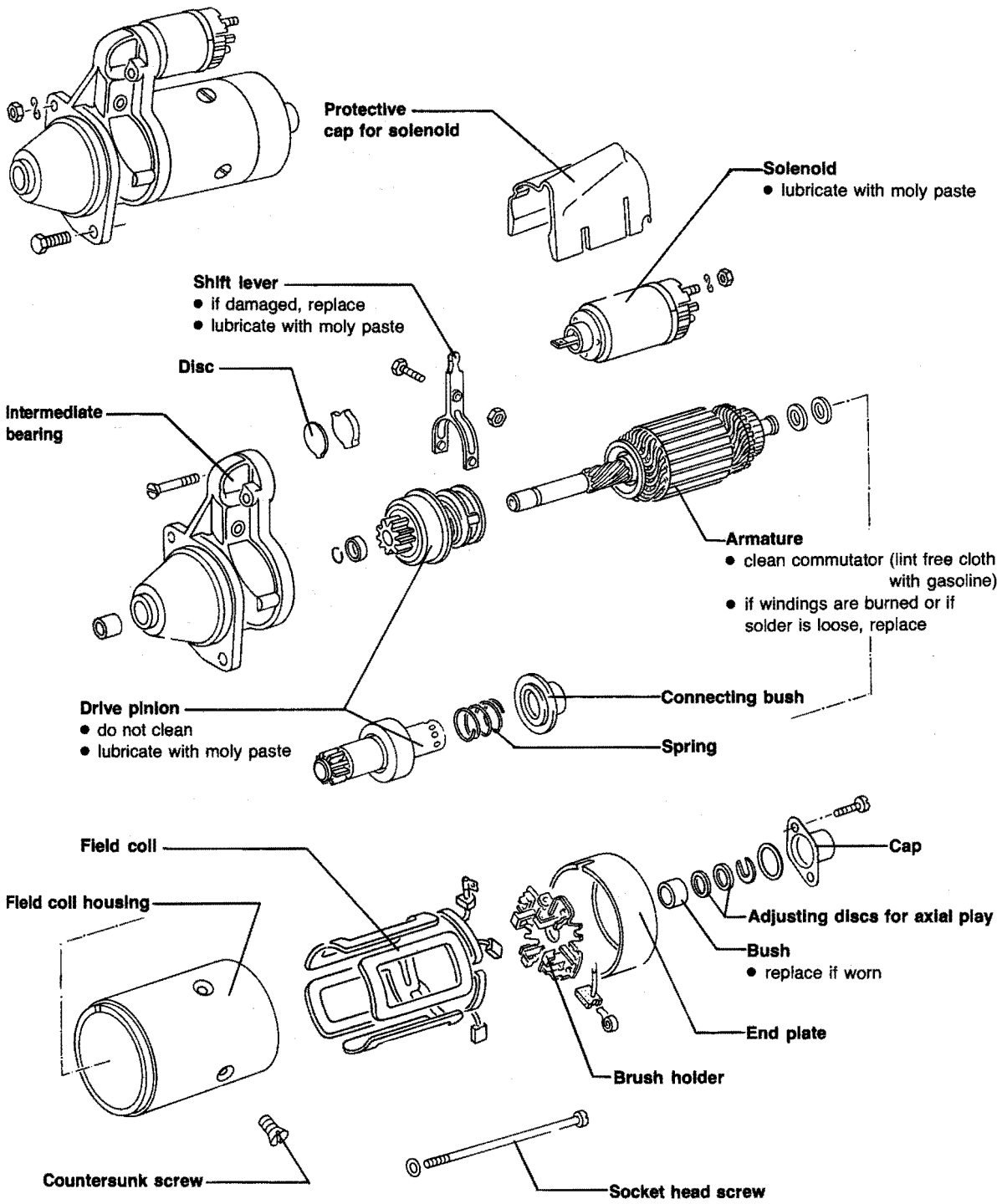

Starter turns engine too slowly or engages and will not turn engine

Note

Check that engine is filled with oil of recommended viscosity

CAUTION

Before working on any part of electrical system, disconnect battery ground strap.

— check V-velt tension
— check battery voltage and charge if necessary
— clean battery terminals and check wire connections for tightness

Starter turns engine	Starter does not turn engine

End

— clean starter terminals and tighten connections
— clean and tighten ground strap between transmission and body at transmission

Starter turns engine	Starter does not turn engine

End

Starter defective

— repair starter

Following defects could be cause of trouble:

Possible causes	Remedy
• carbon brushes sticking or poor contact between brushes and commutator	— clean brushes and brush guides; if necessary replace carbon brushes
• commutator dirty, or grooved and burnt	— clean commutator or replace starter armature

End

Starter does not turn engine when ignition/starter switch is operated

Note

An engine that won't crank or battery that is repeatedly discharged while driving may be caused by poor wiring connections that result from a loose fastening nut on terminal 30 of the starter motor.

To repair this condition:
— disconnect battery ground terminal
— clean and inspect connections at terminal 30 of starter. Repair burned/damaged connections as necessary. Torque fastening nut to 10Nm (7.5 ft lb)
— reconnect battery ground terminal

Also check connection on solenoid switch and ground straps for corrosion and tightness.

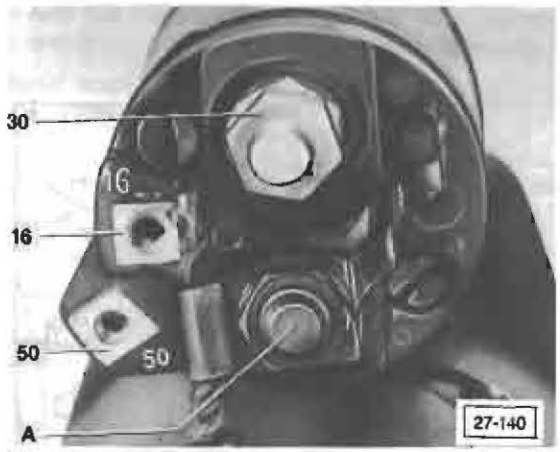

Voltage at solenoid, measuring

- terminal **30** = from battery
- terminal **16** = to ignition coil
- terminal **50** = from ignition/starter switch
- connection **A** = for field windings

— disconnect connectors from terminal **1** on ignition coil before operating starter

— measure voltage at terminal **50** of solenoid switch (min. 8 volts)

No voltage or **less** than 8 volts	Voltage **OK**

No voltage or **less** than 8 volts:

— measure voltage at terminal **50** of ignition/starter switch (min. 8 volts)

No voltage	Voltage **OK**

No voltage: — replace ignition/starter switch → End

Voltage **OK**: — check wiring between terminal **50** on ignition/starter switch and terminal **50** on starter solenoid and make necessary repairs
— on vehicles with automatic transmission, also check neutral/park starter switch. Replace if defective → End

Voltage **OK**:

— measure voltage at connection **A** for field winding on solenoid switch (min. 8 volts)

No voltage	Voltage **OK**

No voltage: — replace solenoid switch → End

Voltage **OK**: — repair starter → End

Starter motor, removing and installing

— disconnect battery ground strap

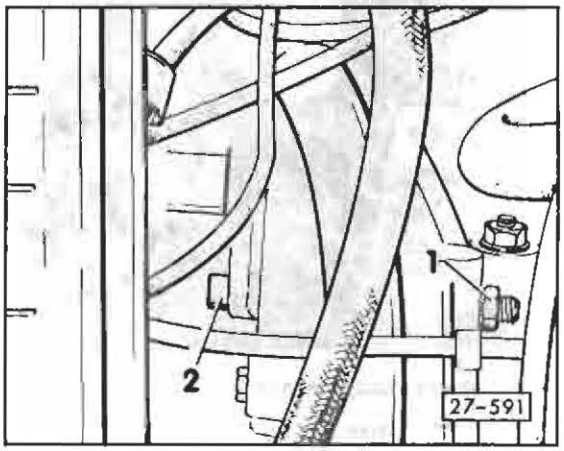

— remove upper mounting nut **1** from starter motor while holding bolt **2** with wrench
— release handbrake (to allow axle shaft rotation)

— raise vehicle on hoist
— disconnect right rear axle shaft from transmission (six bolts) (see Repair Group 34)
— cover exposed CV joint with plastic bag to prevent entry of dirt or foreign material

Note

You can remove the starter motor without disconnecting the axle shaft, however; if the starter motor area of the engine is caked with dirt, axle removal greatly improves accessibility.

Differential lock servo, removing

— loosen clamp securing cooling hoses to chassis
— swing hoses to one side (and secure with wire if necessary) to provide working clearance

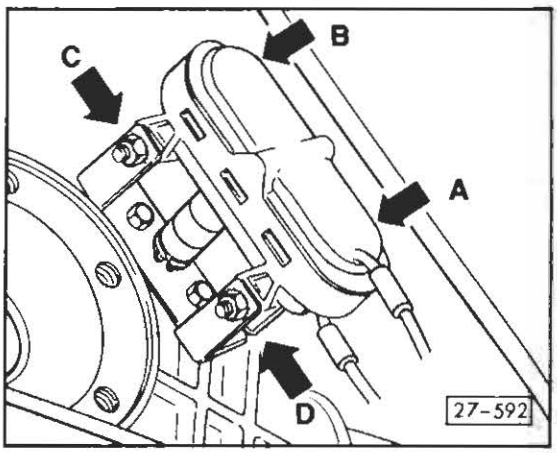

— remove bolt **A** from differential lock servo
— loosen bolt **B** and withdraw as far as possible (clearance limitations prevent complete removal of bolt **B**)

CAUTION

Nuts **C** and **D** are welded to the bracket. No attempt should be made to loosen them.

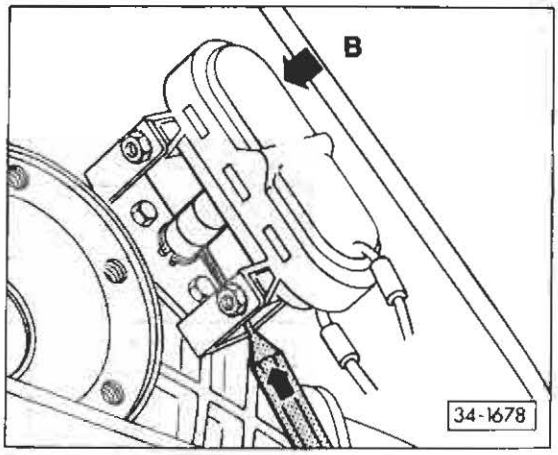

— push back protective sleeve and drive out roll pin
— with bolt **B** withdrawn as far as possible, give servo a slight upward twist and remove from bracket

more

Starter motor, removing and installing, continued

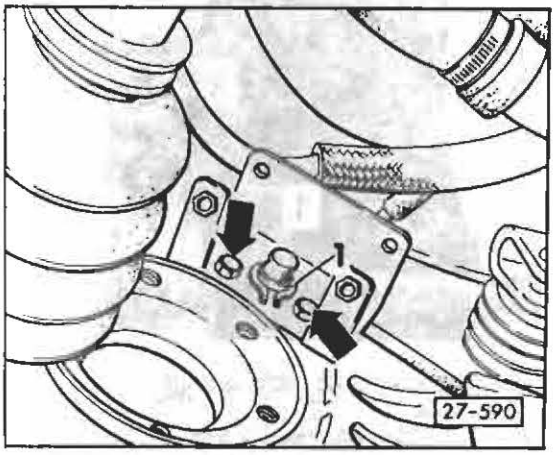

— remove circlip **1**
— remove bolts (**arrows**)
— remove bracket

Starter motor, removing

— disconnect wires from solenoid terminals **30** and **50**

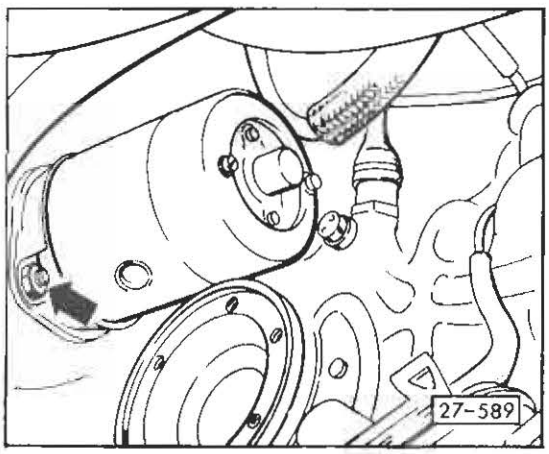

— loosen lower mounting nut on starter motor (**arrow**)
— push up slightly on starter motor and remove

Starter, installing

— clean mating surfaces and apply sealer **AMV 188 000 02** before installing starter
— installation procedure is reverse of removal

Starter motor mounting bolts torque:
- specification: 28 Nm (21 ft lb)

CAUTION

Part numbers are for reference only. Always check with your Parts Department for latest information.

Starter, installing

Work sequence

> **CAUTION**
>
> Before starting work on any part of electrical system disconnect battery ground strap

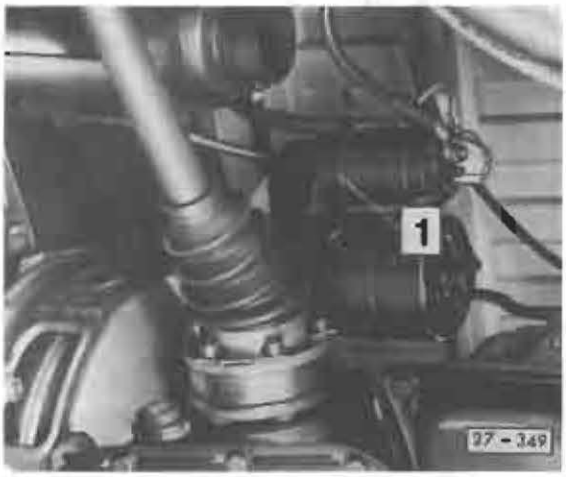

— attach wiring from alternator and wiring for terminal **50** from ignition/starter switch to starter solenoid with cable tie **1**

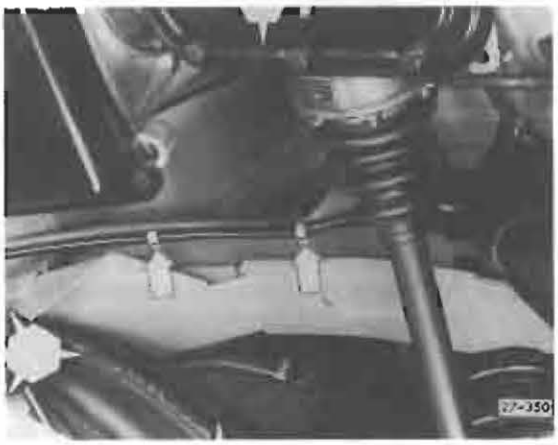

— attach battery/starter cable to frame side member with cable clips (**arrows**)

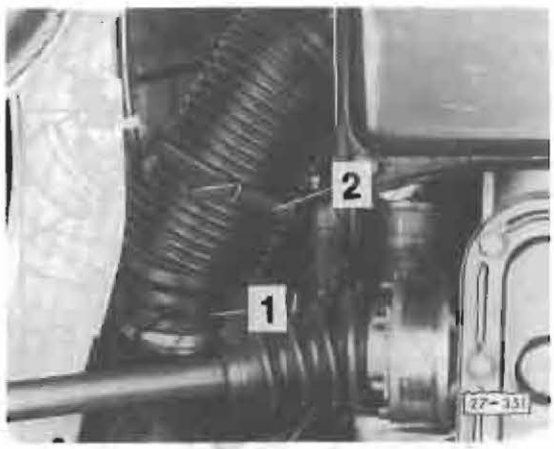

— attach battery/starter cable to warm air hose with cable tie at:
- **1** = vehicles with manual transmission
- **2** = vehicles with automatic transmission

Alternator (90A), removing and installing (Bosch)

Note

To prevent the alternator bolt from becoming loose and breaking, the torque specification has been increased.

The increased torque specification requires use of a new bolt on 1.9L water cooled engine.

To repair a loose/broken bolt:

1.9L Gas Engine
— install new bolt, Part Number N 014 400 4. Torque to 25 Nm (18 ft lb)

Diesel Engine
— replace bolt **ONLY** if damaged, Part Number is unchanged. Torque to 28-33 Nm (21-24 ft lb)

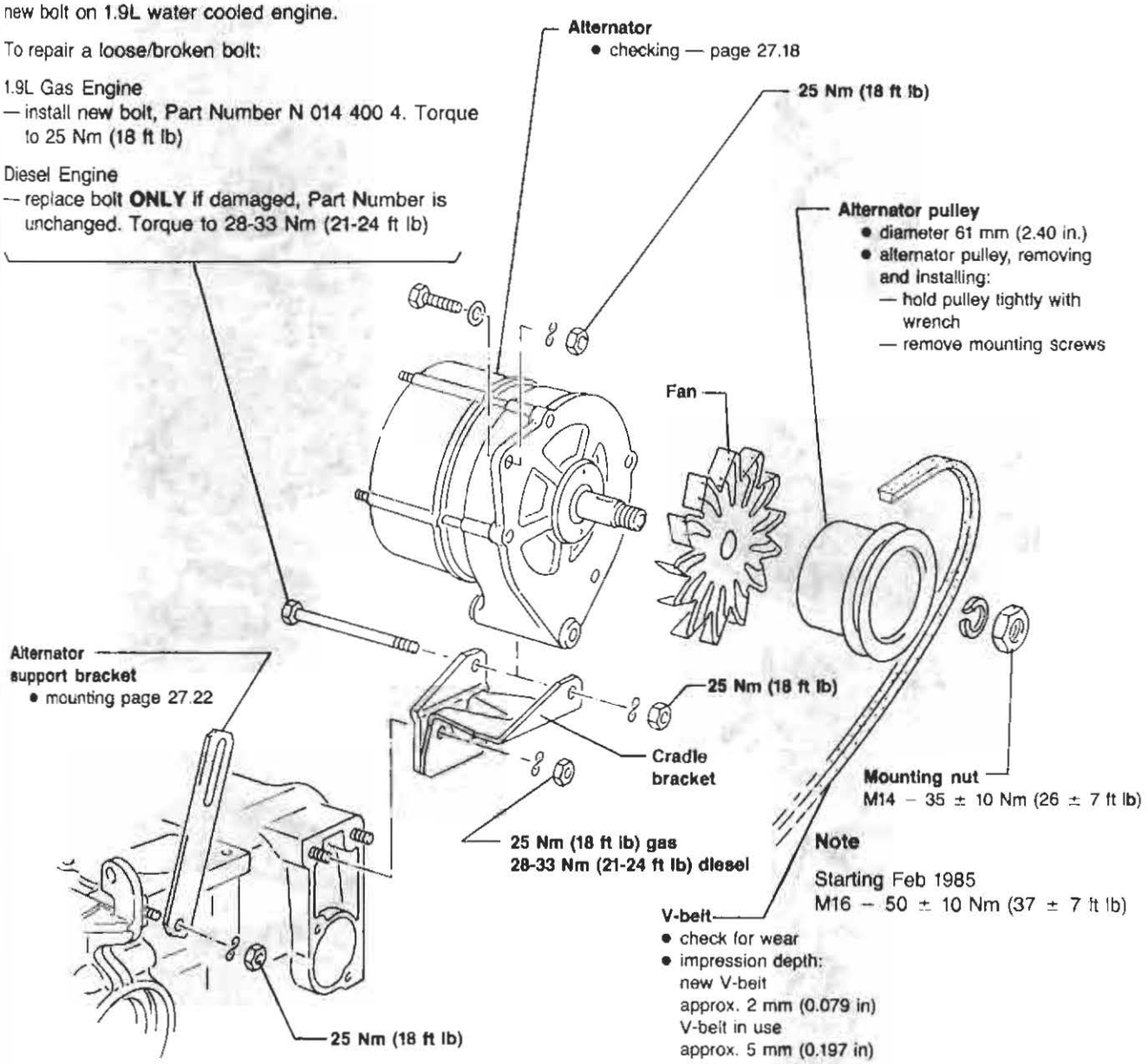

27-576

CAUTION

Part Numbers are for reference only. Always check with the Parts Department for the latest information.

Alternator, 45A and 65A, repairing (Bosch)

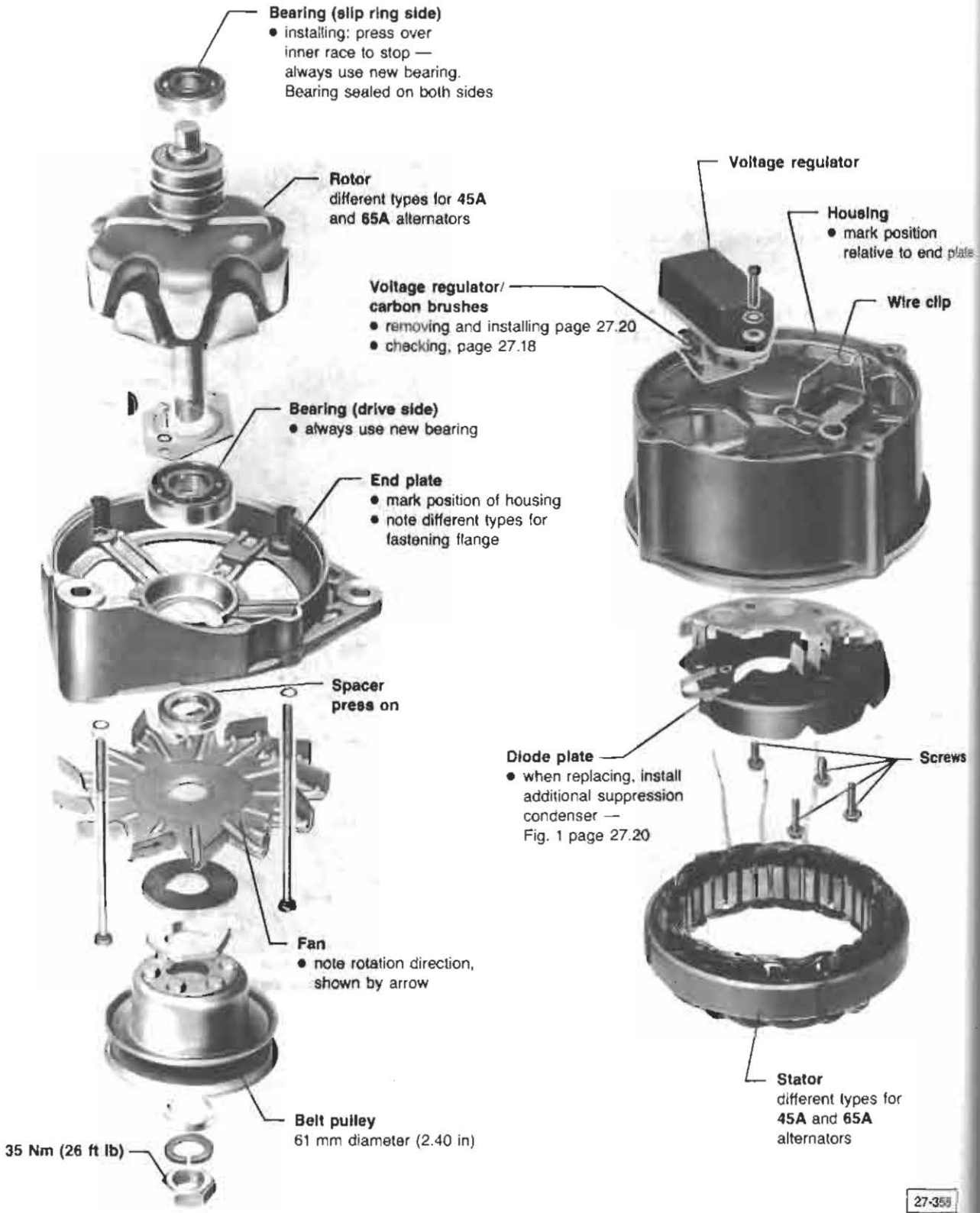

Alternator, repairing (90A, Bosch) starting October 1982

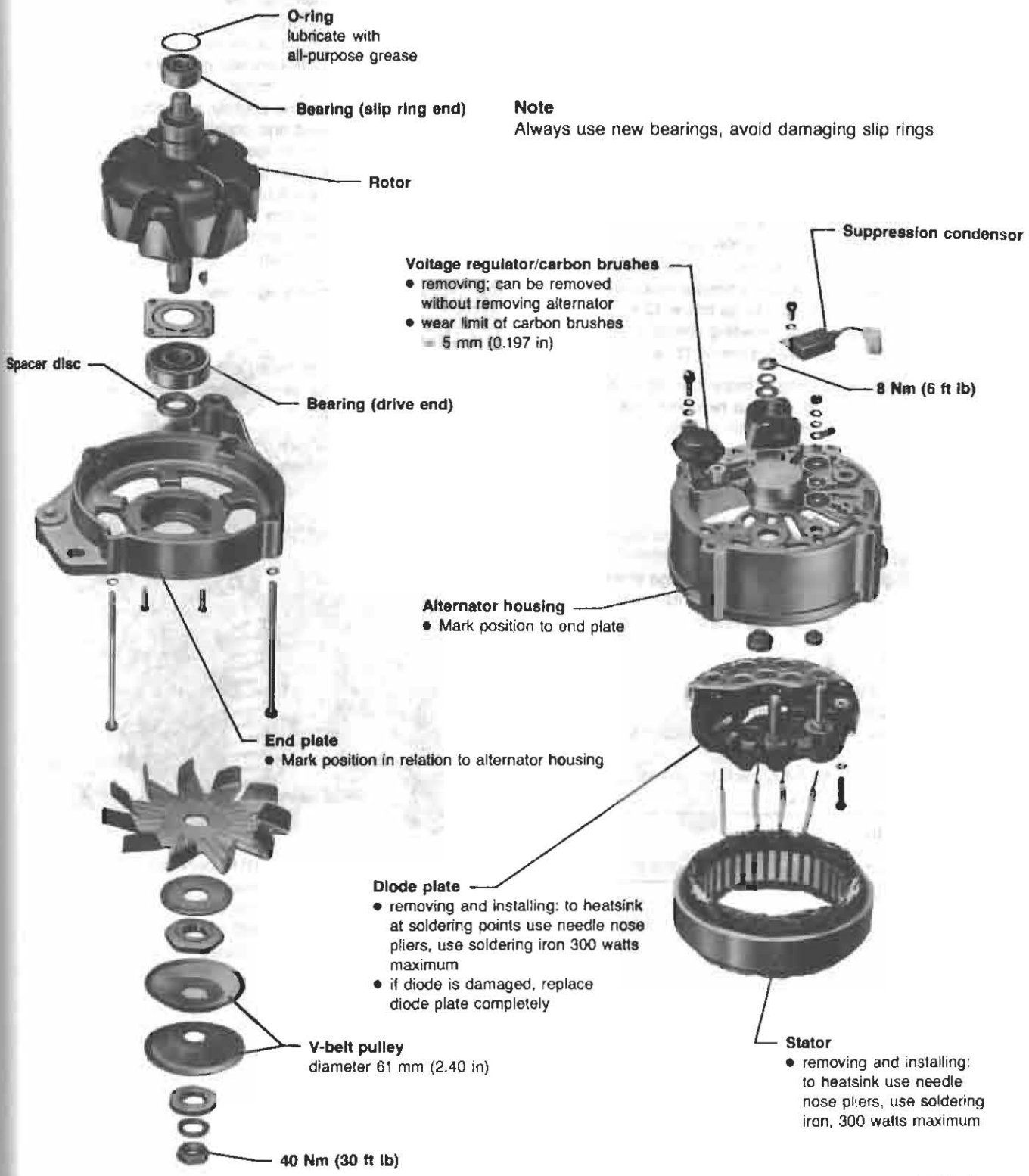

Note
Always use new bearings, avoid damaging slip rings

27-573

Alternator/regulator, checking (with Sun VAT-40 or equivalent)

Visual checks

— check for:
- loose or broken ground straps
- loose or damaged V-belt
- properly operating alternator charging light
- proper tightening of alternator

Work sequence

Alternator output test

— connect alternator/regulator tester according to manufacturer's instructions
— start engine and run at 3,000 rpm
- all electrical accessories must be **OFF**

— adjust load to maximum ammeter reading
- do not allow voltage to go below **12** volts
- maximum ammeter reading should be at least alternator rated output minus **16** amps
- if ammeter reading is more than **16** amps below alternator rating, replace regulator and retest
- if ammeter reading is still too low, alternator is defective

Regulator test

- tester still connected
- all electrical components **OFF** and **NO** ammeter load

— run engine at 3,000 rpm until voltage stops rising
- voltage should be **13.5-14.5** volts

if **NO**, replace regulator and retest

Diode test

- tester still connected

— run engine at 3,000 rpm
— adjust load according to manufacturer's instructions
- if meter reads "bad," replace alternator

CAUTION

Never run alternator with battery disconnected

Current drain test

— turn **OFF** ignition switch, radio, and all lights
— leave rear window defogger switch and air conditioning switches **ON** to check air conditioner relay and load reduction relay
— disconnect ground cable from battery
— connect test light between ground cable and negative battery terminal
- if test light burns brightly, something is switched **ON** or shorted and draining battery

— remove fuses from fuse/relay panel one at a time until test light goes out to help locate problem
- if no faults are found in fused circuits, disconnect cables from non-fused components, i.e. alternator, starter motor, ignition system and dashboard instruments until test light goes out

Alternator charging light test

Note

If battery is still not being charged, even though charging light operates properly, check alternator charging light circuit

— disconnect battery ground strap
— remove instrument cluster

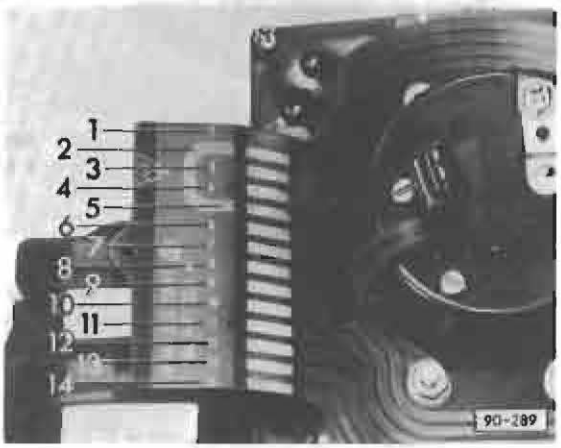

— attach multimeter US1119 between contacts **9** and **13** on printed circuit board
- specification: 140-160 ohms

If value is greater than 160 ohms:
— replace printed circuit board

Alternator and related components, layout

CAUTION

Before starting to work on any part of electrical system disconnect battery ground strap.

Never run alternator with battery disconnected.

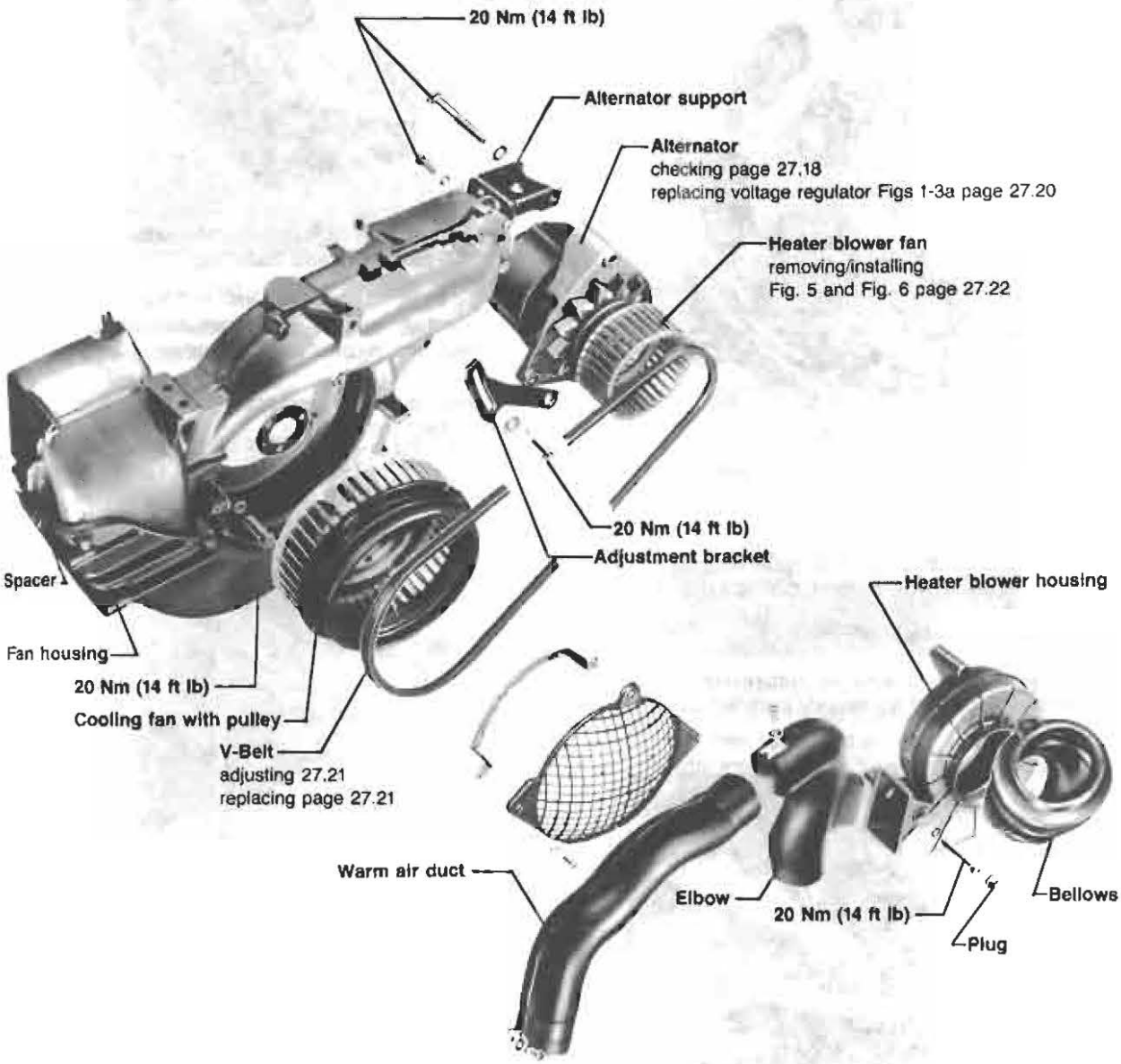

27-352

Voltage regulator, removal, installation and maintenance



Fig. 1 Suppression condenser, connecting

Note

Voltage regulator with black rectangular housing is supplied as replacement. Part No. 028 903 803A

Voltage regulator can be replaced without removing alternator

- if voltage regulator is replaced, suppressor condenser (Fig. 1) (if not already installed) must be added

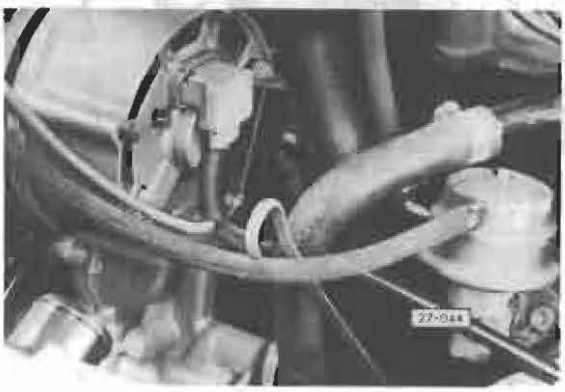

Fig. 2 Voltage regulator, removing and installing

> **CAUTION**
>
> Part numbers are for reference only. Always check with your Parts Department for latest information.

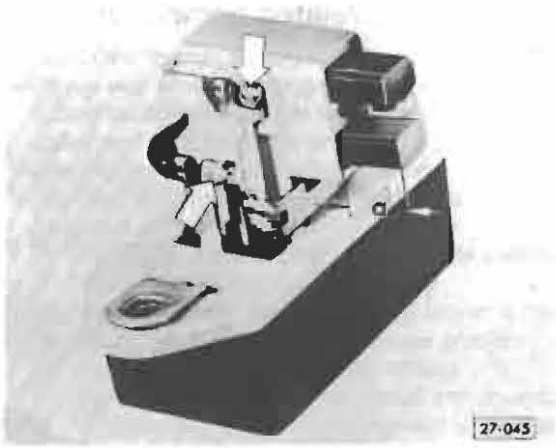

Fig. 3 Voltage regulator/carbon brushes, removing and installing

a = new = 10 mm, wear limit = 5 mm
If necessary, remove solder from connecting wires (arrows) and replace carbon brushes

Alternator/Voltage regulator (from 1981 model)

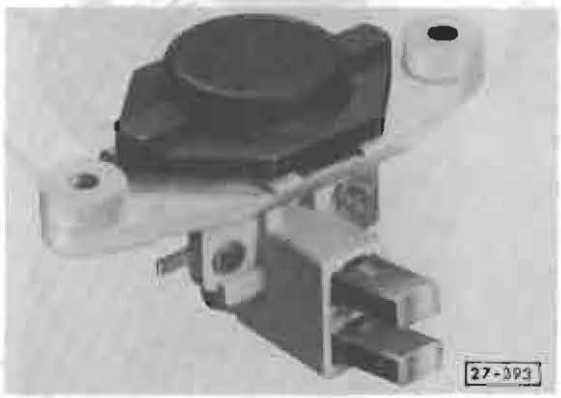

Fig. 3A

Voltage regulator (hybrid-type) now has longer carbon brushes
a = approx. 13 mm (19/32 in)
wear limit = approx. 5 mm (7/32 in)

Note

Do not install new-type voltage regulator (with longer brushes) into old-type alternators

Slip ring (on which brushes make contact) has been reduced in diameter to 28 mm (1 1/8 in) (was 32 mm)

Shape of cooling openings in alternator housing has been changed

V-belt, adjustment

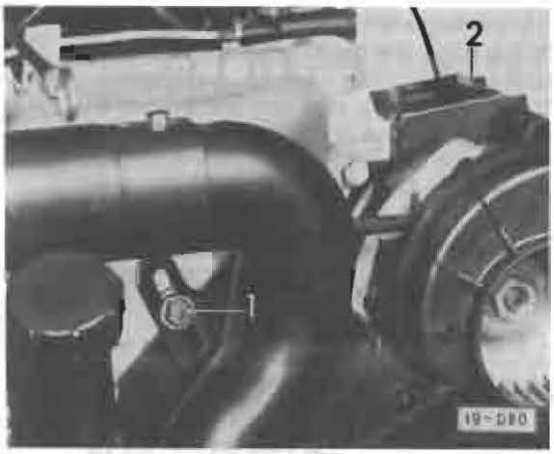

Fig. 4 **V-belt, adjusting**

Due to higher alternator output, present V-belt tension is insufficient.
Adjust belt tension as follows:
— loosen bolts **1** and **2** and pivot alternator

Alternator V-belts up to 1000 mm long (39.4 in)

- 2 mm max. (0.079 in) deflection with new belt, thumb pressure
- 5 mm max. (0.197 in) deflection with previously run belt, thumb pressure

Alternator V-belts over 1000 mm long (39.4 in)

- 10 mm max. (0.394 in) deflection with new belt, thumb pressure
- 15 mm max. (0.59 in) deflection with previously run belt, thumb pressure

Note

Extremely loud squealing may indicate damaged V-belt that should be replaced

V-belt, replacing

Work sequence

— disconnect battery ground strap
— remove bellows from heater blower housing
— remove warm air duct and elbow

— remove guard for fan and ignition timing scale
— loosen bolt for adjustment bracket on fan housing
— remove alternator pivot bolt/upper heater blower housing mounting bolt

— remove lower heater blower housing mounting bolt (on right side of alternator)
— loosen bolt attaching adjustment bracket/heater blower housing to alternator (on left side of alternator)

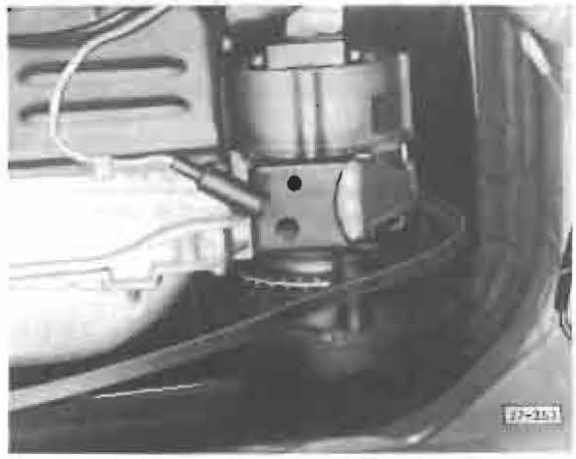

— remove V-belt from V-belt pulley between alternator and heater blower fan
— install new V-belt and adjust
  - after installing new V-belt, bellows must fit tightly on heater blower housing and fresh air intake duct (see also, pages 27.19, 27.22)

Heater blower fan, removing and installing

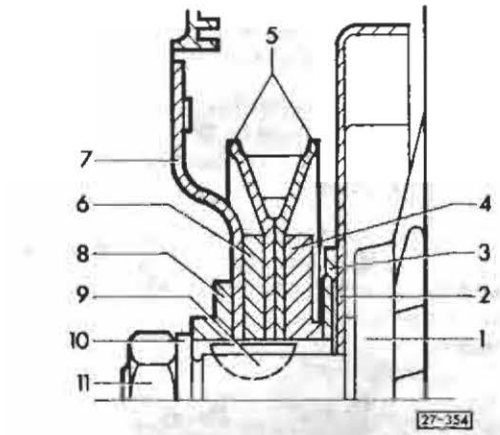

Fig. 5 Heater blower fan, removing/installing

1 = alternator
2 = alternator cooling fan
3 = support ring
4 = shim with collar
5 = V-belt pulley
6 = spacer
7 = heater blower fan
8 = thrust washer
9 = woodruff key
10 = spring washer
11 = nut, tighten to **35 Nm (25 ft lb)**



Fig. 6 Heater blower fan, removing/installing

— hold pulley with V-belt and VW 420

Alternator mount, adjusting
(from illustration 27-576 page 27.15)

If alternator mount is loose, with a consequent rattling noise, the cause can be the elimination of the spring washer under each bracket mounting bolt. The mounting bolts may only partly touch the uneven and rough surface of the cast iron bracket, causing the preload force to be insufficient even with correctly applied torque.

To correct,

— install spring washer, Part No. NO12 24 111, on each bracket mounting bolt
— install bolts and torque to 22 Nm (16 ft lb)

Note

Spring washers are now installed on cars beginning with January, 1982 Vanagon production (from **VIN 25CH089151**).

Mounting bolts, tightening

If alternator mounting bolts become loose, follow this procedure:

Waterboxer

— replace old bolts with new bolts of higher strength (New bolt P/N N14 400.4)
— re-torque new bolt to higher torque specification

Diesel motor

— re-torque old bolts

Torque specification:
- Waterboxer 24.0 Nm (18 ft lb)
- Diesel motor 28.0-33.0 Nm (21.0-24.0 ft lb)

CAUTION

Part numbers are for reference only. Always check with your Parts Department for latest information.

Troubleshooting indicator light for alternator (LED)

Does not illuminate with Ignition ON (engine NOT started)

Possible open circuit between alternator D+ and indicator light (LED)

— remove alternator cover
— remove D+ wire from alternator
— connect jumper wire between D+ and ground
— turn **ON** ignition

Alternator indicator light (LED) lights up

↓

Possible causes:

— improper alternator ground
— worn out carbon brushes
— defective voltage regulator
— defective rotor

↓

Check alternator grounding and brushes:

If **NOT OK**:	If **OK**:
make necessary corrections — if light now comes on — END	— replace voltage regulator

↓

If light still fails to come on:

replace alternator

END

Alternator indicator light (LED) does **NOT** light up

Alternator indicator light (LED) burnt out

— disconnect battery ground strap
— replace indicator lamp (LED)
— connect battery ground strap
— turn on ignition

Alternator indicator light (LED) lights up	Alternator indicator light (LED) does **NOT** light up
END	↓

Wiring between alternator D+ and indicator light (LED) is open

— correct break in wiring (or open circuit) between alternator D+ and indicator light (LED)

Note

Consult specific current flow diagram for vehicle in question, to determine exact signal path.

END

Troubleshooting indicator light for alternator (LED)

Light is on with ignition **OFF**
— diode (or diodes) defective
— replace alternator

END

Alternator indicator light does **NOT** go out when RPM increases
Possible causes:
— slipping fanbelt, tighten if necessary — ground short between alternator D+ and indicator light (LED) — Defective alternator

END

Possible short to ground between alternator D+ and indicator light (LED)	
— disconnect alternator wiring — turn **ON** ignition	
Alternator indicator light (LED) lights up	Alternator indicator light (LED) does **NOT** light up

— short to ground in wiring between alternator D+ and indicator light (LED) must be corrected
Note Consult specific current flow diagram for vehicle in question, to determine exact signal path.

END

— Test alternator output — test voltage regulator
— replace defective component

END

Cruise control system, repairing

Note

When troubleshooting:
— check vacuum hose on vacuum pump for wear and condition; replace if necessary
— check all vacuum hoses for cracks, replace if necessary

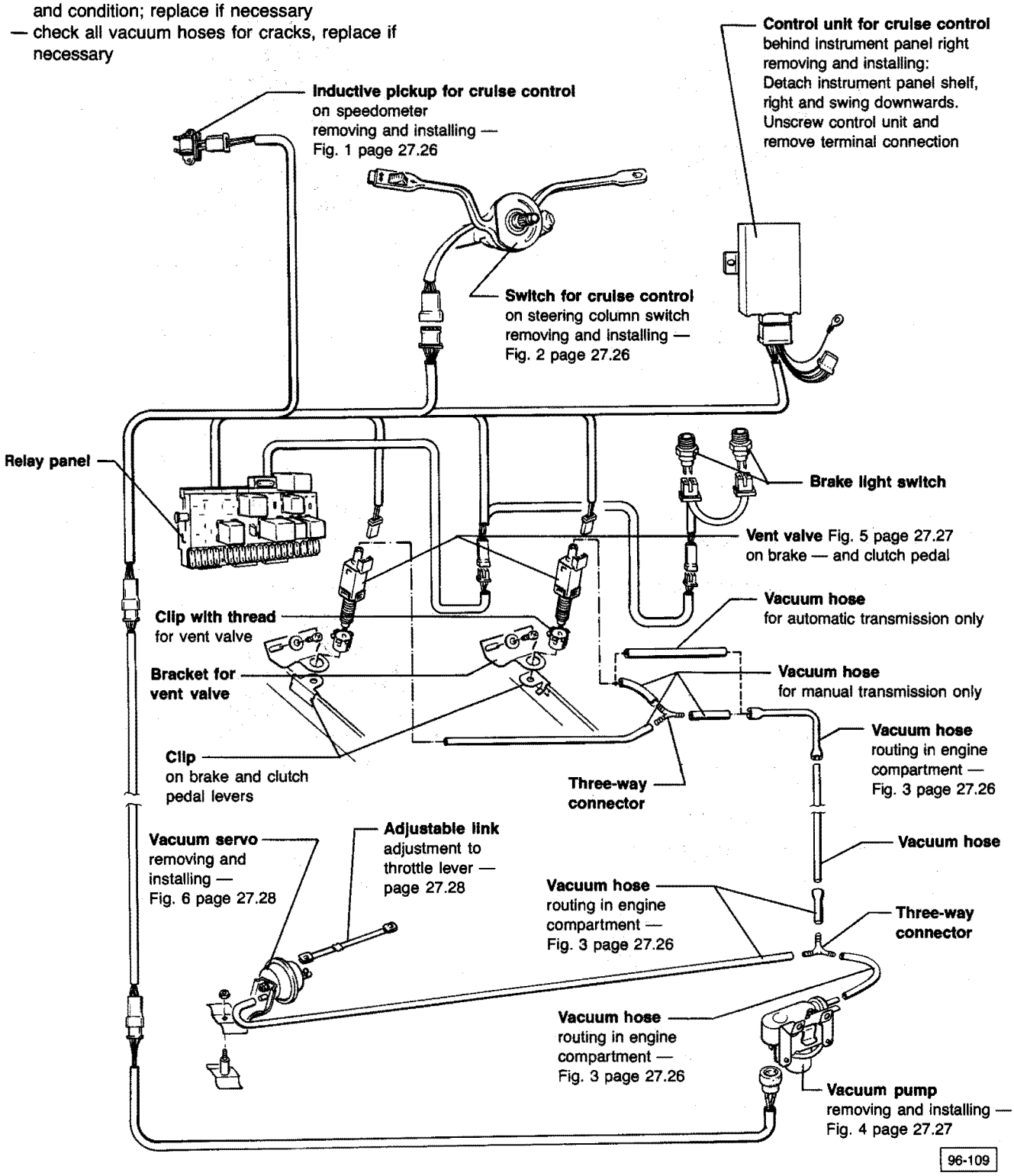

Fig. 1 Inductive pickup for cruise control, removing and installing

— detach battery ground strap
— remove instrument panel insert cover and foil, located underneath
— remove drive cable for speedometer
— remove electrical connections to instrument panel insert
— unscrew 4 mounting bolts from instrument panel insert

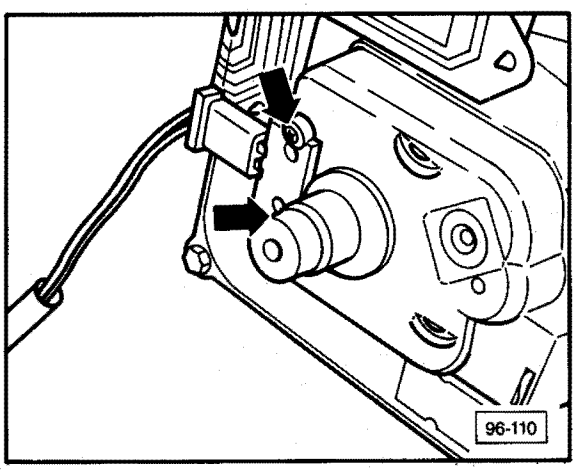

— remove inductive pickup screws and remove from harness connector

Fig. 2 Switch for cruise control removing and installing

— remove steering column trim

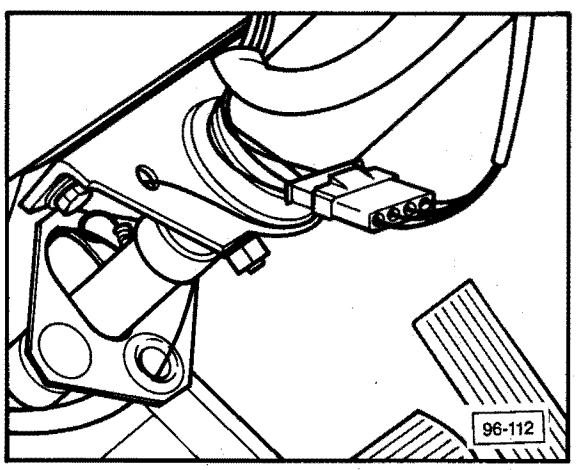

— separate 4-pin terminal connection to switch for cruise control
— pry off cap for horn and remove steering wheel

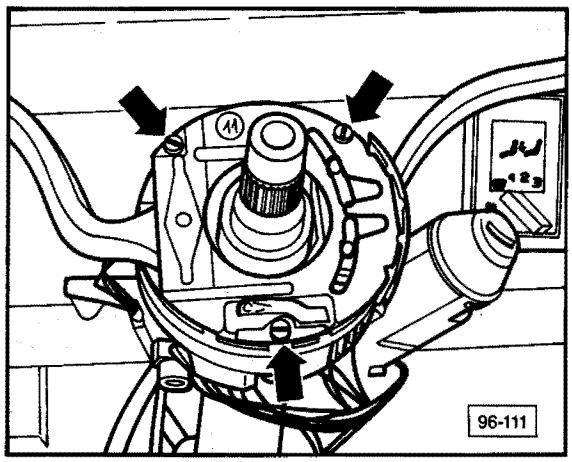

— remove mounting bolts for steering column switch and remove turn signal with switch for cruise control

Fig. 3 Routing vacuum hoses in engine compartment

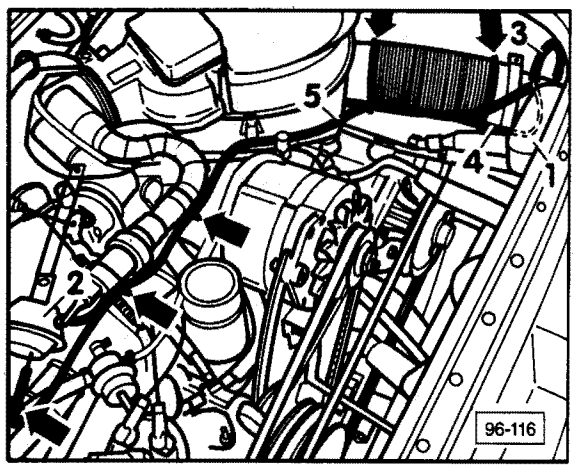

— secure vacuum hoses with tie wraps (**arrows**)

1 — Vacuum pump
2 — Vacuum unit with adjustable link
3 — Vacuum hose to pump
4 — Vacuum hose to vent valves
5 — Vacuum hose to vacuum unit

Fig. 4 Vacuum pump, removing and installing

The vacuum pump is located at the rear right side of the engine compartment.

— pull off vacuum hose and connector

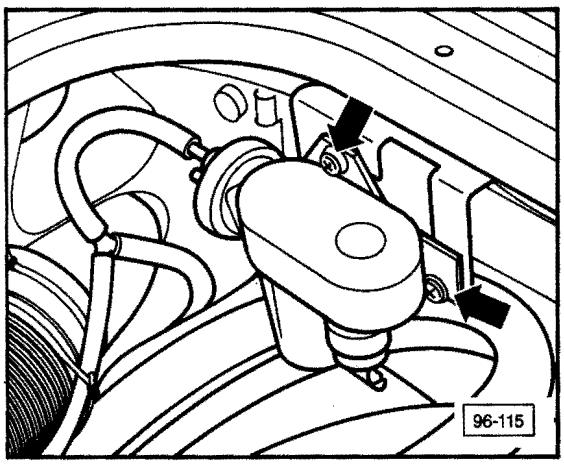

— remove mounting bolts (**arrows**)

Fig. 5 Vent valve(s), removing and installing

Note

Vehicles with a manual transmission will have a vent valve for the brake and a vent valve for the clutch. Vehicles with an automatic transmission will have a vent valve for the brake pedal only.

— remove steering column trim

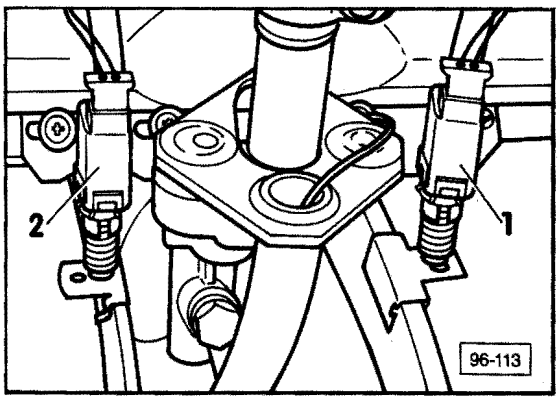

— remove vacuum hose and terminal from brake vent valve (1) and clutch vent valve (2)

— unscrew vent valve from the vent clip

CAUTION

Do not damage thread.

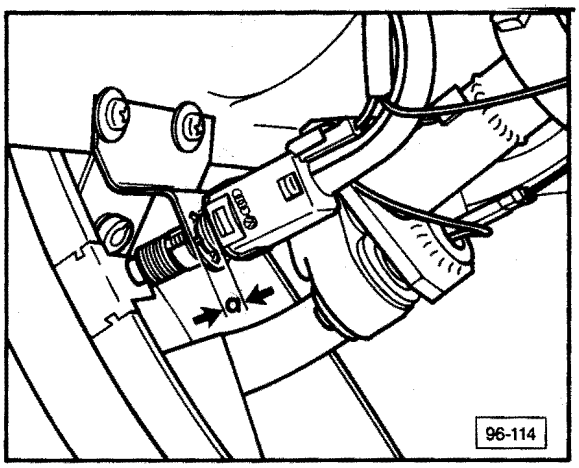

When installing vent valve(s) set distance "**a**", so that the valve(s) are closed when brake and clutch pedals are in rest position, and opened when pedals are actuated.

Fig. 6 Removing and installing cruise control vacuum servo

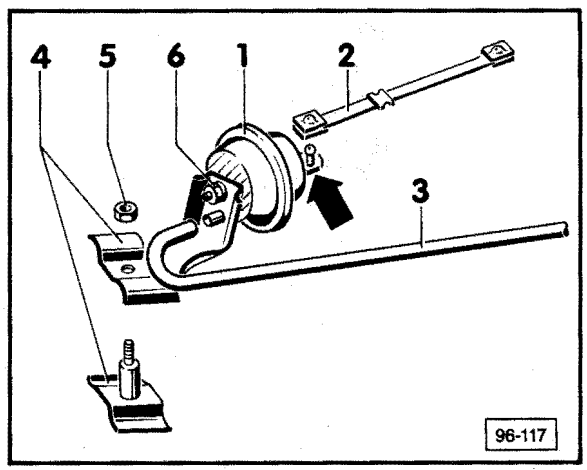

1 — diaphragm

To check diaphragm:
— disconnect vacuum hose from pump

— press vacuum diaphragm inward, then plug detached vacuum hose
- diaphragm must **NOT** move

2 — adjustable link to throttle valve lever
3 — vacuum hose
4 — securing bracket on intake manifold with stud and spacer
5 — nut
torque: **4 Nm (3 ft lb)**
6 — nut with shoulder
torque: **23 Nm (18 ft lb)**

Note

The adjustable link is set to zero clearance at idling speed (**arrow**).

Setting adjustable link

Attach link to throttle valve lever and adjust ball head on vacuum servo so that the adjustable link can be clipped in place without altering the throttle valve lever position.

Cruise control troubleshooting

Note

To perform following test, gear selector lever must be in "**D**" or "**2**" (automatic transmission).

No ground circuit to control unit

— disconnect control unit harness connector
— connect test light between terminals **8** of harness connector and 12 volts positive

• test light lights	• test light does **NOT** light

— repair broken wire in ground circuit → End

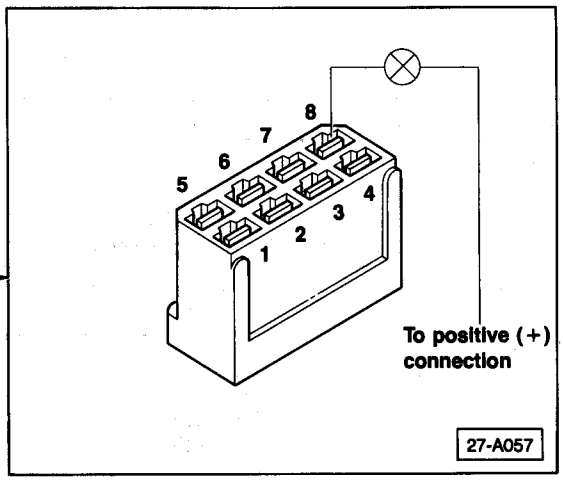

ON/OFF switch does not work

— connect test light between terminal **1** and ground
— switch ignition **ON**
— turn cruise control switch **ON**

• test light lights	• test light does **NOT** light

— repair break in wiring → End

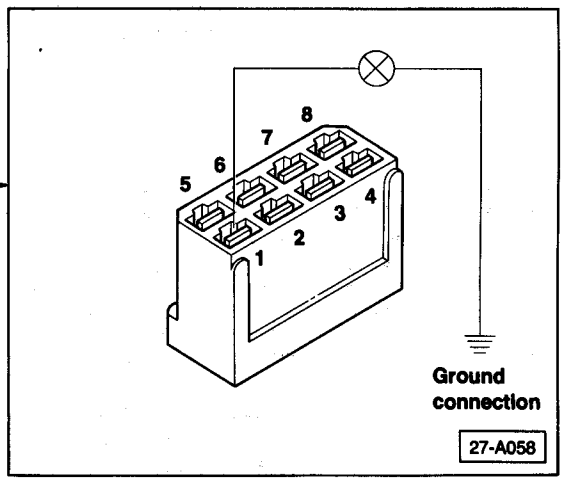

Vacuum vent valves do **NOT** work

- connect test light between terminal **1** and terminal **3** of harness connector
- switch ignition and cruise control **ON**
- press brake pedal and clutch pedal one at a time

• test light goes out	• test light does **NOT** go out

Go to Ⓐ next page

— repair break in wiring
OR
— adjust vacuum vent valve
OR
— replace defective vacuum vent valve

End

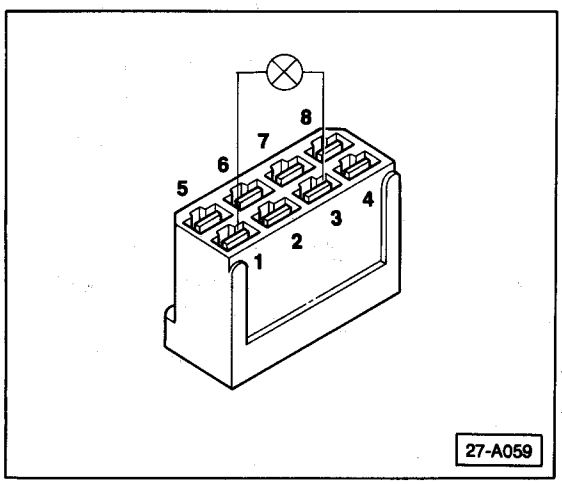

Ⓐ

Cruise control switch does NOT work

— connect test light between terminal **6** of harness connector and ground
— switch ignition and cruise control **ON**
— push **RESUME** on cruise control switch

- test light lights
- test light does **NOT** light

— repair break in wiring
OR
— replace defective switch

End

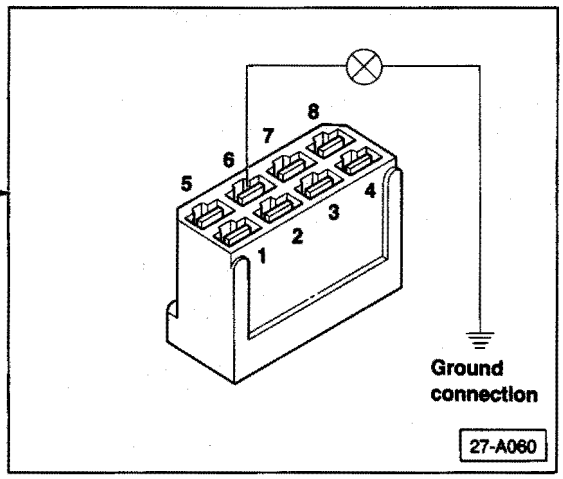

— connect test light between terminal **2** of harness connector and ground
— push **SET** on cruise control switch

- test light lights
- test light does **NOT** light

— repair break in wiring
OR
— replace defective switch

End

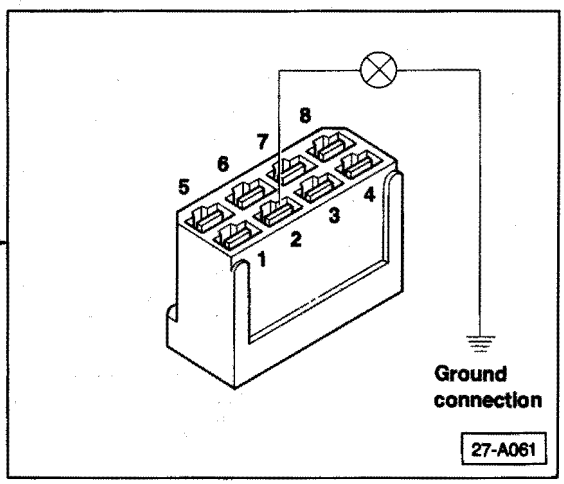

Vacuum control motor does NOT work

— connect jumper wire between terminal **4** of harness connector and ground

- pump runs
- pump does **NOT** run

Go to Ⓑ next page

— replace pump

End

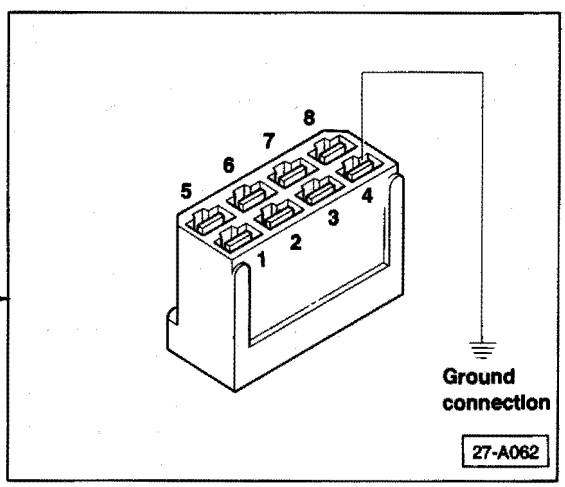

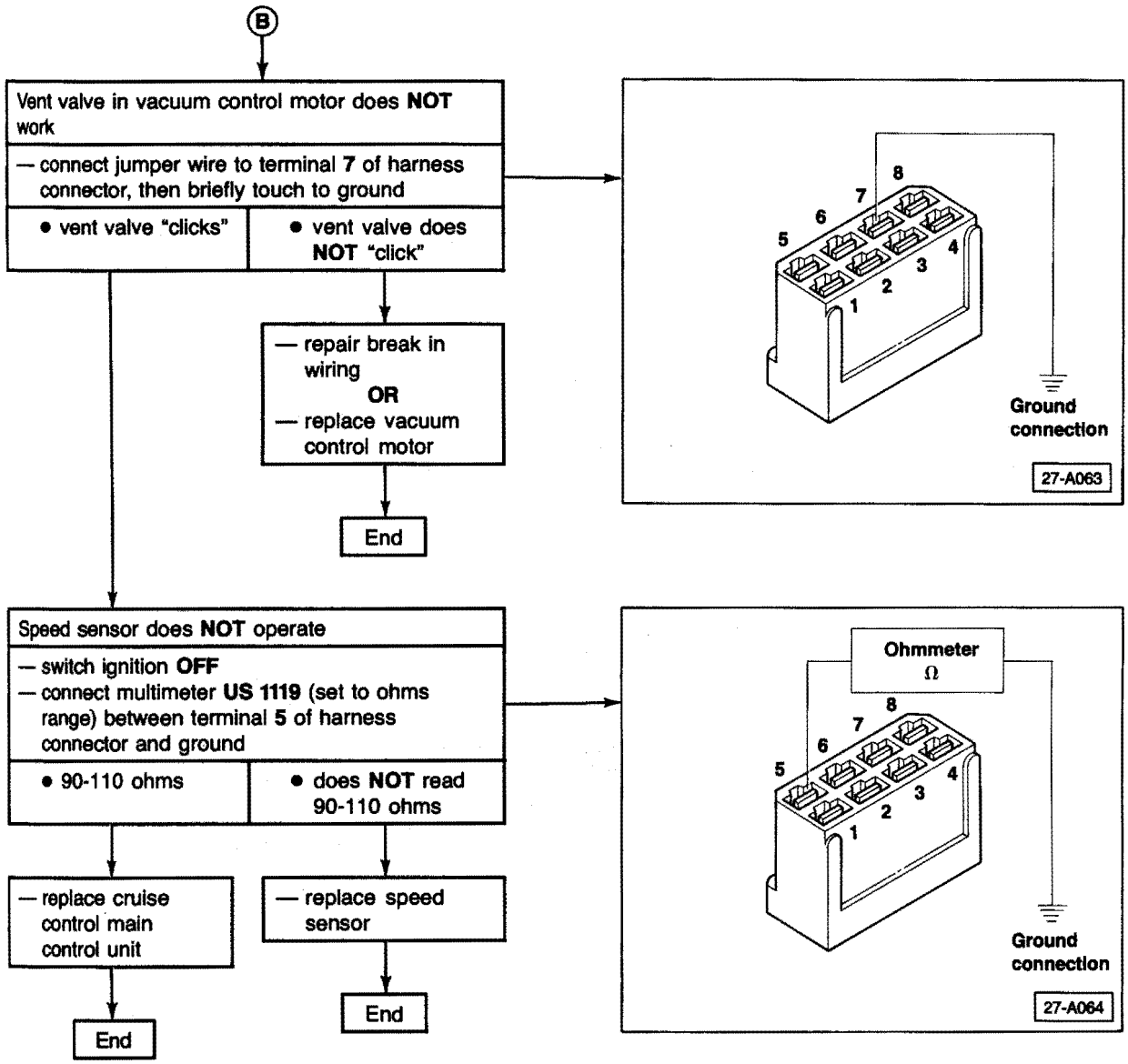

Note

An inoperative cruise control system may be caused by vacuum loss due to cracked or leaking hoses.

Index

Air-cooled AFC
— California 28.8
distributor 28.11, 28.12
distributor drive 28.10
Hall control unit/generator 28.14
Hall ignition troubleshooting 28.17
idle stabilizer 28.16
ignition distributor/settings 28.9
ignition timing 28.11
rotor 28.10
vacuum advance/retard 28.13
vacuum unit 28.12
wires/coil checking 28.10
— USA (except Calif.) and Canada 28.2
distributor 28.6, 28.7
distributor drive 28.4, 28.5
ignition/distributor settings 28.3
ignition timing 28.5, 28.6
rotor 28.4
vacuum unit/advance 28.7
wires/coil checking 28.4

Diesel
— Glow plug light troubleshooting 28.27
— Quick glow troubleshooting 28.24

Water-cooled Digijet
— Centrifugal advance 28.34
— Distributor driveshaft 28.32, 28.33
— Hall control unit 28.36
— Hall generator 28.37
— Idle stabilizer 28.38
— Ignition cable connectors new style 28.30a
— Ignition coil 28.32
— Ignition distributor/Hall generator 28.29
— Ignition distributor/settings 28.29
— Ignition system 28.28
— Ignition wires/connectors 29.31
— Rotor 28.31
— Suppressor connectors 28.32
— Trigger wheel 28.38
— Vacuum unit 28.35
— Vacuum advance/retard 28.35

Water-cooled Digifant
— Distributor, installing 28.44
— Hall sender checking 28.43
— Ignition distributor 28.40
— Ignition and injection system, repairing 28.39
— Ignition settings 28.41
— Ignition switching function, checking 28.44
— Ignition timing 28.42

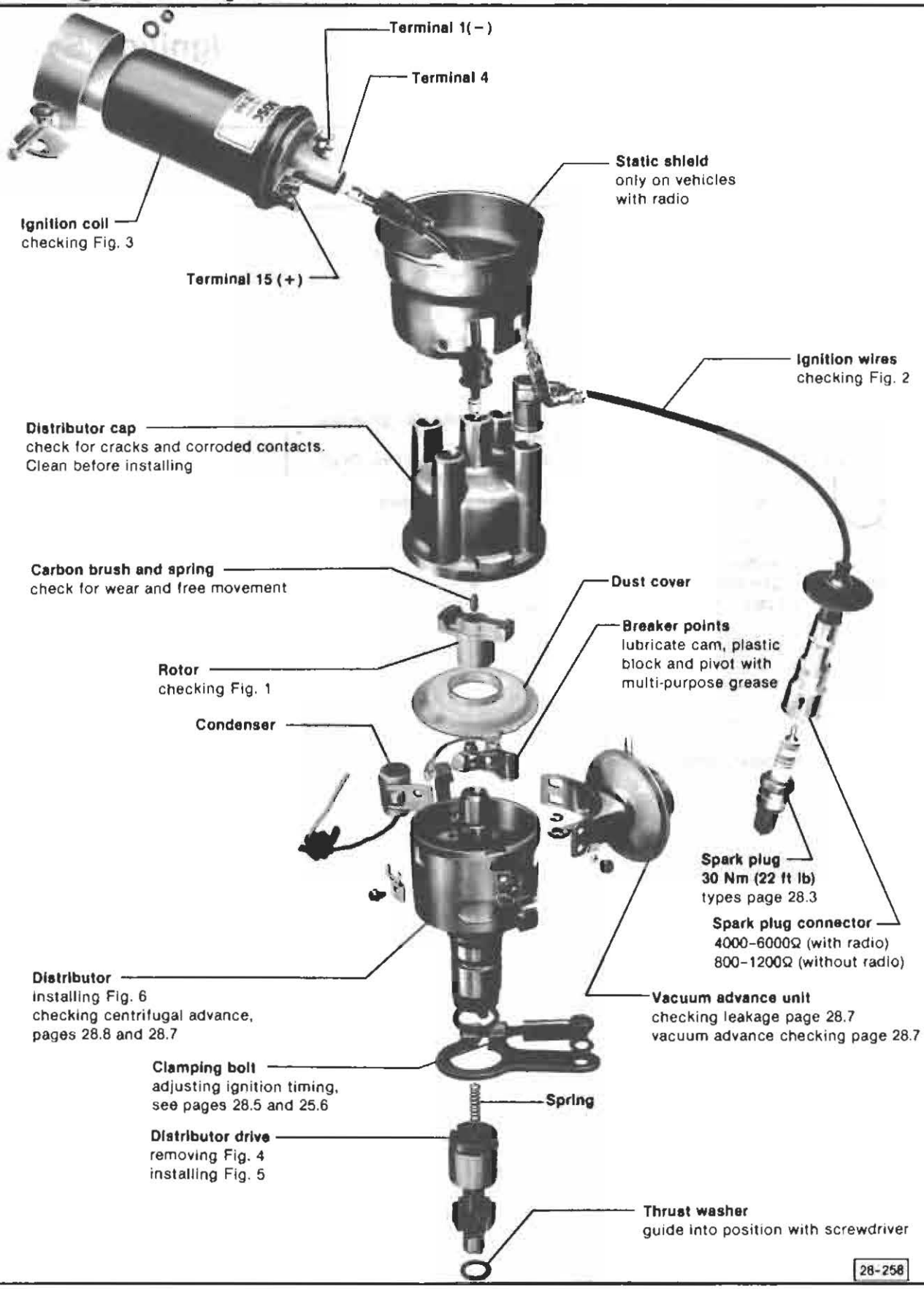
Terminal 1(−)
Terminal 4
Static shield
only on vehicles
with radio
Ignition coil
checking Fig. 3
Terminal 15 (+)
Ignition wires
checking Fig. 2
Distributor cap
check for cracks and corroded contacts.
Clean before installing
Carbon brush and spring
check for wear and free movement
Dust cover
Breaker points
lubricate cam, plastic
block and pivot with
multi-purpose grease
Rotor
checking Fig. 1
Condenser
Spark plug
30 Nm (22 ft lb)
types page 28.3
Spark plug connector
4000–6000Ω (with radio)
800–1200Ω (without radio)
Distributor
installing Fig. 6
checking centrifugal advance,
pages 28.8 and 28.7
Vacuum advance unit
checking leakage page 28.7
vacuum advance checking page 28.7
Clamping bolt
adjusting ignition timing,
see pages 28.5 and 25.6
Spring
Distributor drive
removing Fig. 4
installing Fig. 5
Thrust washer
guide into position with screwdriver
28-258

Engine code letters		CV
Distributor (Part No.)		022 905 205S
Ignition timing		7.5° BTDC
Timing mark location: crankshaft pulley		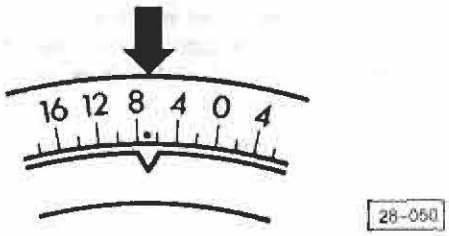 28-050
Idle speed manual automatic Vacuum hose disconnected		800- 950 rpm 850-1000 rpm
Dwell angle	new points wear limit	44-50° 42-58°
Centrifugal advance (crankshaft degrees)	start	1000-1200 rpm
		9-14° at 1600 rpm
	end	21-25° at 3400 rpm
Vacuum advance	start	107-147 mbar (80-110 mm Hg)
	end	266 mbar (200 mm Hg) 8-12°
Spark plugs	Bosch Beru Champion	W 145 M2, W 8 CO 145/14/3L N 288
Spark plug tightening torque		30 Nm (22 ft lb)
Spark plug gap		0.6-0.7 mm (0.023-0.028 in.)
Firing order		1—4—3—2

Note

A rough idle or misfire during partial load could be caused by ignition sparks jumping from the plug wire connector to the noise suppression shield, or the cylinder head.

— remove and inspect the plug connector for white spots or burn marks

— on those vehicles equipped with a suppressor shield on the distributor cap, it is necessary to remove the shield and check for white spots or burn marks on the distributor cap

If white spots or burn marks are present, replace the damaged components.

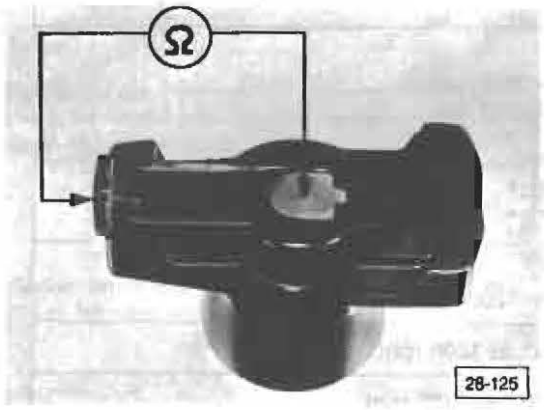

Fig. 1 Rotor, checking

- 4000-6000 ohms

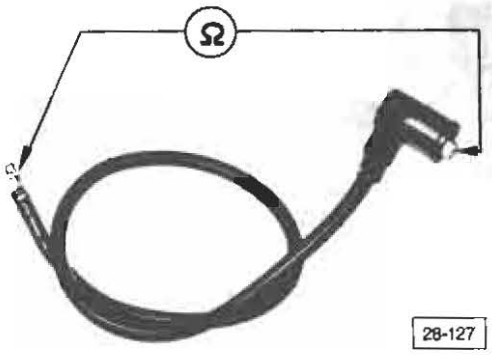

Fig. 2 Ignition wires, checking

— check wires between distributor and spark plugs (including connectors) for continuity
- resistance should not vary greatly

— check wire between ignition coil and distributor (including connector)
- resistance should not be greater than 2400 ohms

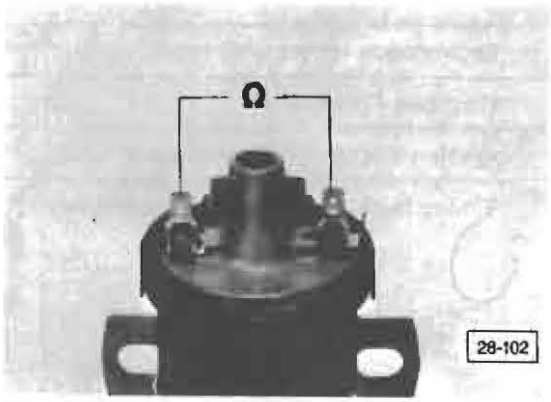

Fig. 3 Ignition coil, checking

— disconnect all wires from coil terminals

— measure resistance between terminals 1 and 15
- 2.6-3.1 ohms

— measure resistance between terminals 1 and 4
- 6000-12000 ohms

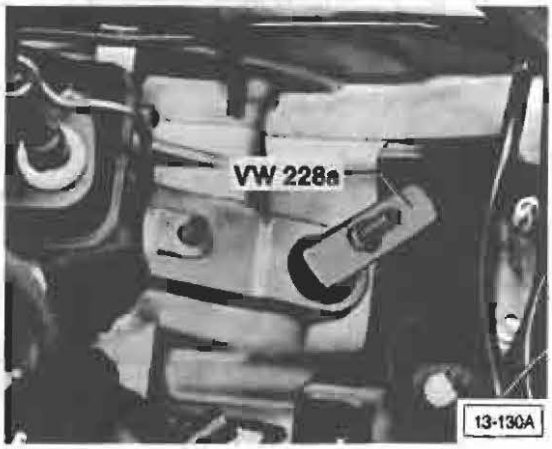

Fig. 4 Distributor drive, removing

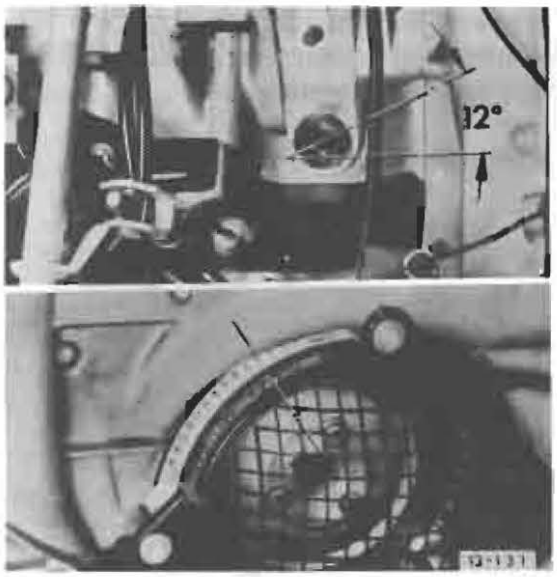

Fig. 5 **Distributor drive, installing**

— set crankshaft to TDC on cylinder No. 1
— install drive shaft so that offset slot is at an angle of about 12° to engine centerline (small segment to coil side)



Fig. 6 **Distributor, installing**

— set crankshaft to TDC on cylinder No. 1
— turn rotor until it is pointing to No. 1 cylinder mark on edge of housing
— install distributor
— clean distributor cap, check for cracks, signs of tracking and rotor tightness on shaft
— adjust ignition timing

Ignition timing, checking/adjusting with SIEMENS 451 tester or equivalent

Work sequence

Note

If SIEMENS 451 tester is not available, proceed with check using procedure with timing light (see page 28.6)

— run engine until engine oil is at least 30°C (86°F)



— connect SIEMENS tester according to manufacturer's instructions
— run engine at idle speed
  • manual: 800–950 rpm
  • automatic: 850–1000 rpm
— pull off vacuum hose to distributor
— check dwell angle, adjust if necessary
  • new points: 44–50°
  • wear limit: 42–58°
— check timing. Ignition timing point will read directly on SIEMENS tester
  • 7.5° before TDC

if **NO**, loosen distributor clamping bolt and turn distributor
— reconnect vacuum hose to distributor
— retighten clamping bolt

Ignition timing, checking/adjusting with timing light

Work sequence

— run engine until engine oil is at least 30°C (86°F)
— connect dwell/tach according to manufacturer's instructions
— run engine at idle speed
  • manual: 800–950 rpm
  • automatic: 850–1000 rpm

— pull off vacuum hose to distributor
— check dwell angle, adjust if necessary
  • new points: 44–50°
  • wear limit: 42–58°

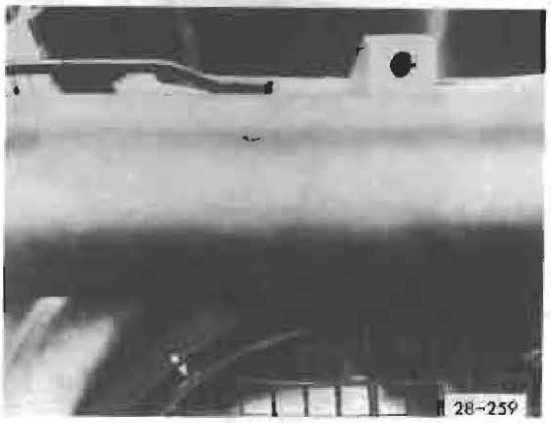

— flash ignition timing scale with timing light
  • mark on pulley must align with red mark on scale

if **NO**, loosen distributor clamping bolt and turn distributor
— reconnect vacuum hose to distributor
— retighten clamping bolt

Ignition distributor, checking centrifugal advance with SIEMENS 451 tester or equivalent

Work sequence



— connect tester according to manufacturer's instructions
— start engine and run at idle
  • ignition timing and rpm will register directly on tester

— adjust idle speed if necessary
  • manual: 800–950 rpm
  • automatic: 850–1000 rpm
— pull hose off vacuum unit
— adjust ignition timing if necessary (see pages 28.5–28.6)
— note advance angle on test instrument (basic advance angle)

Note

Start of centrifugal advance is shown by increasing advance angle registered on test instrument while increasing rpm

— increase engine speed slowly to 1600 rpm
— read off advance angle on test instrument

Note

To determine centrifugal advance, subtract basic advance angle from last advance angle measured

Example

last advance angle measured
(–) minus basic advance angle
(=) centrifugal advance

— repeat check at 3400 rpm
— reconnect vacuum hose when test is completed

Ignition distributor, checking centrifugal advance with timing advance tester

Work sequence

— connect tester according to manufacturer's instructions
— start engine and run at idle
  • manual: 800–950 rpm
  • automatic: 850–1000 rpm
— pull off hose at vacuum unit
— check ignition timing and adjust if necessary (see pages 28.5 to 28.6)
— flash ignition timing scale with timing light and note indicated angle (basic angle)

Note

Start of centrifugal advance is shown by movement of notch while increasing rpm

— increase engine speed slowly to 1600 rpm
— bring notch back to original setting by turning knob on tester and read off advance value

Note

To determine centrifugal advance, subtract basic advance angle from last advance angle measured

Example

last advance angle measured
(–) minus basic advance angle
(=) centrifugal advance

— repeat check at 3400 rpm
— reconnect vacuum hose when test completed

Vacuum advance unit, checking for leakage

Work sequence



— connect vacuum tester Sun VPT 212-1 or equivalent according to manufacturer's instructions
— run engine at approx. 2500 rpm and check that vacuum at throttle valve housing is reaching vacuum unit

If **NO**, vacuum connection on throttle valve housing may be blocked

— increase engine speed until vacuum tester indicates higher reading than 266 mbar (200 mm Hg)

— switch vacuum tester so it holds vacuum on side connected to vacuum unit
— turn engine **OFF**
— vacuum reading on tester must not drop more than 10% within 1 minute, otherwise vacuum unit or hose is defective

Vacuum advance, checking

— connect SIEMENS 451 tester or equivalent, or tach and timing light according to manufacturer's instructions
— connect vacuum tester between throttle valve housing and vacuum advance unit connection
— set vacuum tester to allow vacuum to pass through

— start engine and run at idle
  • manual: 800–950 rpm
  • automatic: 850–1000 rpm
— if using SIEMENS tester or equivalent, read off indicated advance angle (basic angle) and note

— if using timing light, flash scale and note advance angle (basic angle)
— increase engine speed until reading on vacuum tester is higher than 266 mbar (200 mm Hg)
— switch vacuum tester so that it holds vacuum on side connected to vacuum unit

— leave engine running at idle (adjust if necessary)
— reduce vacuum on vacuum tester to 266 mbar (200 mm Hg) or 107–147 mbar (80–110 mm Hg)
— note advance angles
— determine vacuum advance by subtracting basic advance angle from measured advance angle

Example

last advance angle measured
(–) minus basic advance angle
(=) vacuum advance

— compare vacuum advance angles with specified values on page 28.3

WARNING

Do not touch or remove ignition coil wire when running or cranking engine.
Only disconnect wires of ignition system or connect/disconnect test instruments when ignition is turned **OFF**

CAUTION

Do not connect any test instruments on terminal 15 (+) of ignition coil, this could damage electronic parts. Use fuse No. 10 for connection. Safety precautions for transistorized ignition system see page 28.9, 28.15

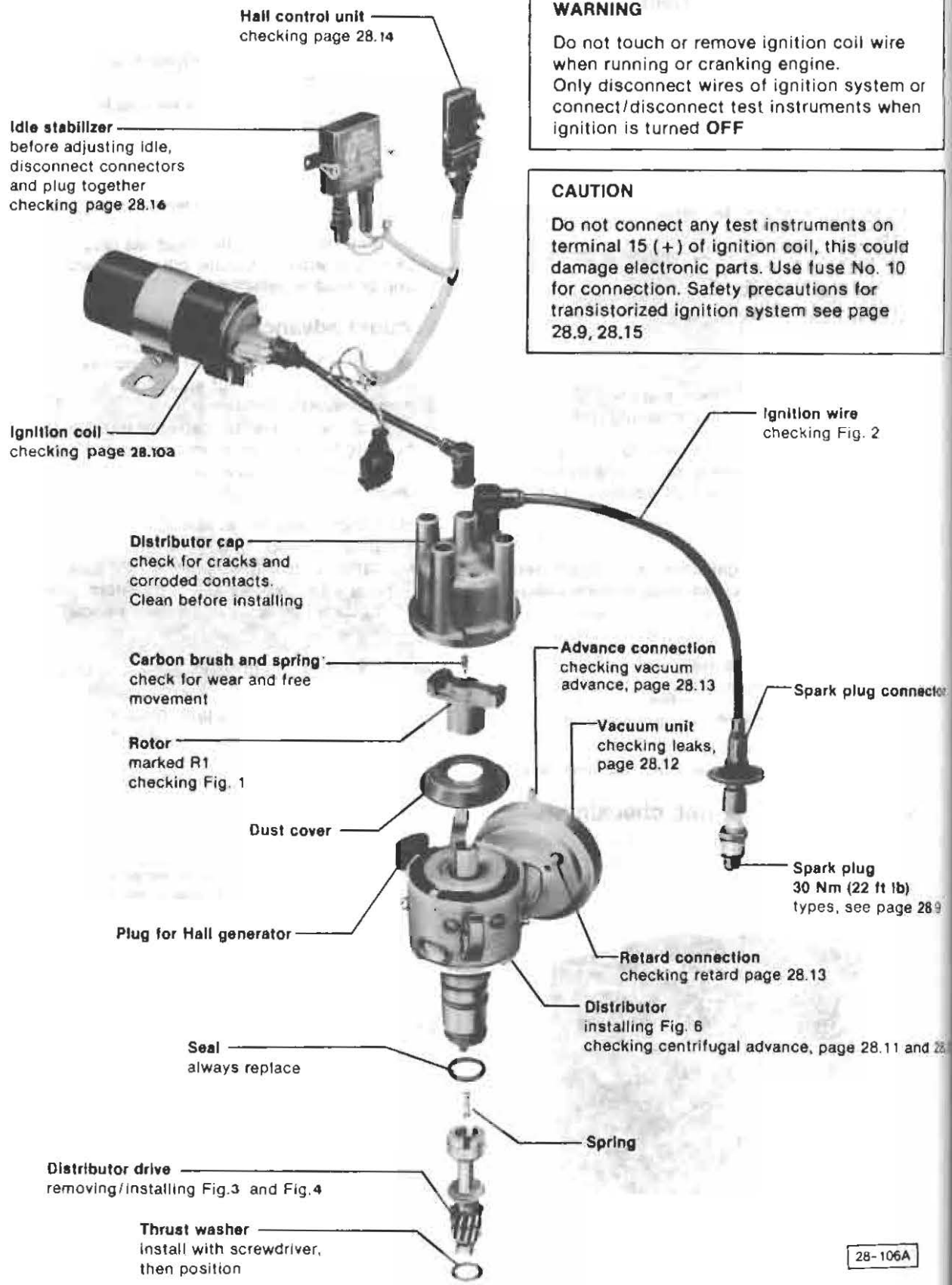

28.8 Ignition timing with Hall Generator

Air-cooled AFC Calif.

Engine code letters		CV
Distributor (Part No.)		039 905 205C
Ignition timing		5° ATDC
Timing mark location: crankshaft pulley		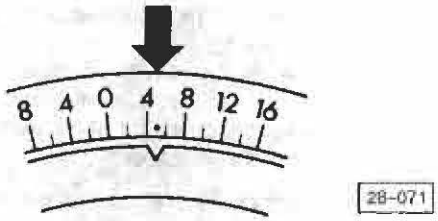 28-071
Idle adjustment Vacuum hoses connected Idle stabilizer plugs removed and connected together		850-950 rpm
Dwell angle setting		not adjustable
Centrifugal advance (crankshaft degrees)	start	1050-1300 rpm
		9-13° at 1600 rpm
	end	21-25° at 3400 rpm
Vacuum advance	start	90-160 mbar (70-120 mm Hg)
	end	240-280 mbar (180-210 mm Hg) 9-12°
Vacuum retard	start	90-160 mbar (70-120 mm Hg)
	end	200-280 mbar (150-210 mm Hg) 11-13°
Spark plugs	Bosch Beru Champion	W 145 M2, W 8 CO 145/14/3L N 288
Spark plug gap		0.6-0.7 mm (0.023-0.028 in.)
Spark plug tightening torque		30 Nm (22 ft lb)
Firing order		1—4—3—2

Transistorized ignition system cautions

Do not connect any condenser/suppressor or test light to terminal 1. Do not connect test instruments with a 12 volt supply on terminal 15 of ignition coil. Do not crank engine before high tension wire of distributor cap (terminal 4) is connected to ground with jumper wire (example: compression check etc.). Do not replace installed coil—211 905 115 C—with conventional type. Do not leave battery connected when electric welding on car. Do not start engine after heating up to more than 80°C (176°F), example: paint drying booth. Do not wash engine when it is running. Do not use battery booster longer than 15 sec. nor exceed 16.5 volts with booster. Allow 1 minute pause between boosting attempts. Do not disconnect battery while engine is running. Disconnect plug to ignition control unit when car has to be towed.

Note

A rough idle or misfire during partial load could be caused by ignition sparks jumping from the plug wire connector to the noise suppression shield, or the cylinder head.

— remove and inspect the plug connector for white spots or burn marks
— on those vehicles equipped with a suppressor shield on the distributor cap, it is necessary to remove the shield and check for white spots or burn marks on the distributor cap

If white spots or burn marks are present, replace the damaged components.

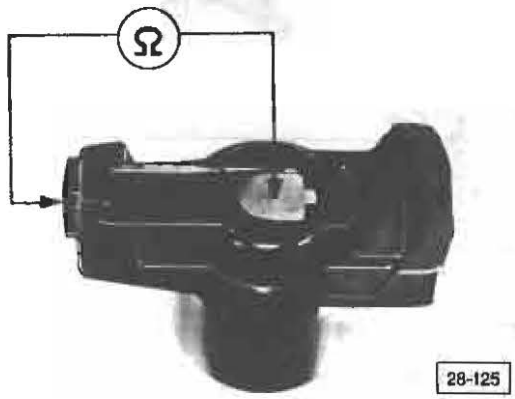

Fig. 1 Rotor, checking

— check that resistance is approximately 1000 ohms

Note

Do not change rotor when installing radio; rotor must be marked with R1.

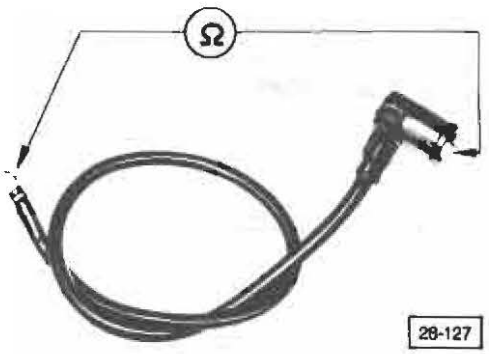

Fig. 2 Ignition wires, checking

— check wires between distributor and spark plugs (including connectors) for continuity
  • resistance should not vary greatly between wires
— check wire between ignition coil and distributor (including connectors)
  • resistance should not be greater than 12000 ohms

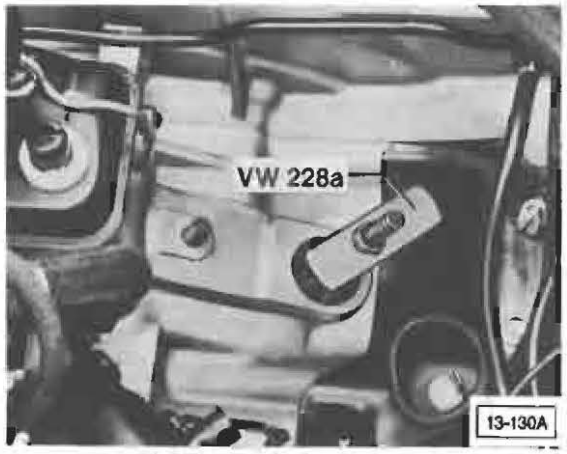

Fig. 3 Distributor drive, removing

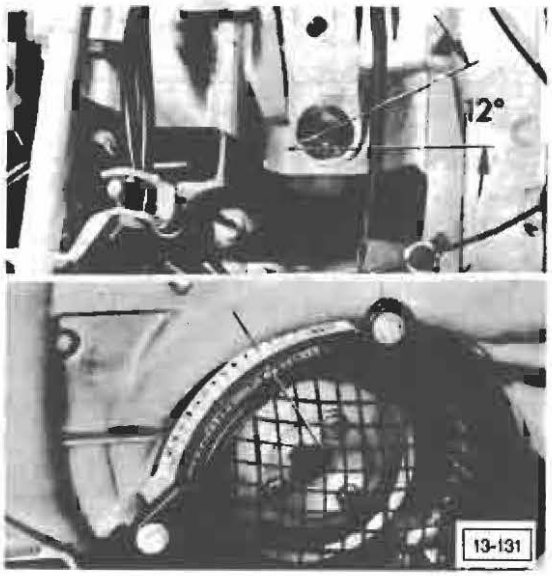

Fig. 4 Distributor drive, installing

— set crankshaft to TDC on cylinder No. 1
— install drive shaft so that offset slot is at an angle about 12° to engine centerline (smaller segment toward coil side)
— install spacer spring

CAUTION

When working on vehicles with Hall ignition system, observe following precautions to prevent injury or damage to ignition system:

- do **not** touch or remove high tension wire when running or cranking engine
- disconnect ignition wires **only** when ignition is switched **off**
- test instruments should be connected/ disconnected **only** when ignition is switched **off**

- do **not** connect any condenser to terminal 1
- do **not** tow cars without disconnecting plugs on ignition control unit
- do **not** crank engine until high tension wire of distributor cap (terminal 4) is connected to ground with jumper wire (example: compression check, etc.)
- do **not** leave battery connected when electric welding on car
- do **not** substitute rotor of ignition distributor with one of different type
- when installing suppressor, use only 1000 ohms for high tension wires and 1000 to 5000 ohms for spark plug connectors

- do **not** wash engine when it is running
- do **not** use battery booster longer than 1 minute nor exceed 16.5 volts with booster

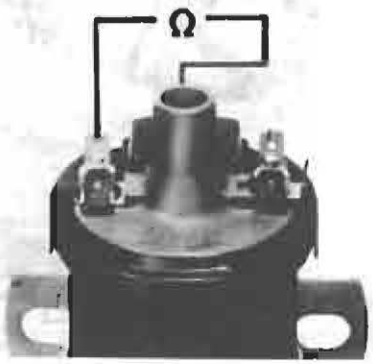

28-301

Ignition coil secondary resistance, checking

- disconnect all wires from coil terminals
- messure resistance between negative terminal 1 and coil high tension terminal 4
  - resistance:
    2400 – 3500 ohms
- if not within tolerance, replace ignition coil

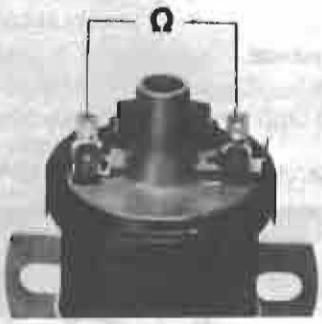

28-253

Ignition coil primary resistance, checking

- disconnect all wires from coil terminals
- measure resistance between positive 15 and negative 1 coil terminals
  - resistance:
    0.52–0.76 ohms
- if not within tolerance, replace ignition coil



Fig. 6 Ignition distributor, installing

— set crankshaft to TDC on cylinder No. 1
— turn rotor until it is pointing to No. 1 cylinder mark on edge of housing
— install distributor
— clean distributor cap, check for cracks, signs of tracking and rotor tightness on shaft
— adjust ignition timing

Ignition timing, adjusting with timing light

Work sequence

Note

Oil temperature must be at least 60°C (140°F)



— disconnect plugs from idle stabilizer
  • squeeze connectors to release
— connect plugs together (arrow)

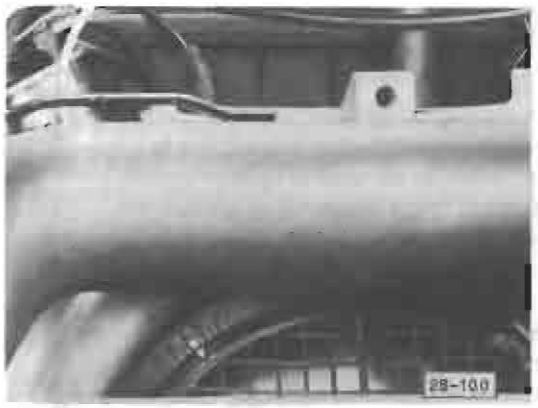

— start engine
— adjust engine idle to 850–950 rpm
— flash timing mark with timing light
  • mark on pulley must align with red mark on scale
— if necessary, loosen distributor clamping bolt and turn distributor
— reconnect idle stabilizer
— retighten clamping bolt

Ignition distributor, checking centrifugal advance with SIEMENS 451 tester or equivalent

Work sequence



— connect tester according to manufacturer's instructions
— remove idle stabilizer plugs and connect together
— start engine and run at idle
  • ignition timing and rpm will register directly on tester
— adjust idle speed
  manual: 850–950 rpm
  automatic: 850–950 rpm
— check and adjust ignition timing if necessary
— go to next page

— pull off both vacuum hoses from distributor vacuum unit
— plug vacuum retard hose
— reset idle speed to specifications
— note advance angle on tester (basic advance angle)

Note

Start of centrifugal advance is shown by increasing advance angle registered on tester while increasing rpm

— increase engine speed slowly to 1600 rpm
— read off advance angle on tester

Note

To determine centrifugal advance, subtract basic advance angle from last advance angle measured

Example

last advance angle measured
(–) minus basic advance angle
(=) centrifugal advance

— compare centrifugal advance angle to specified value of page 28.9
— repeat test at 3400 rpm
— reconnect vacuum hoses when test completed

Note

With vacuum hoses connected, adjust idle speed to given specifications before connecting plugs to idle stabilizer

— reconnect idle stabilizer

Ignition distributor, checking centrifugal advance with timing advance tester

Work sequence

— connect tester according to manufacturer's instructions
— pull advance and retard hoses off vacuum unit
— disconnect plugs from idle stabilizer and connect together
— start engine and adjust idle speed to 900 rpm
— flash timing mark with timing light, and note indicated angle (basic angle)

Note

Start of centrifugal advance is shown by movement of notch while increasing rpm

— increase engine speed slowly to 1600 rpm
— bring notch back to original setting by turning knob on tester and read off advance value

Note

To determine centrifugal advance, subtract basic advance angle from advance angle measured

Example

last advance angle measured
(–) minus basic advance angle
(=) centrifugal advance

— compare centrifugal advance to chart page 28.9
— repeat check at 3400 rpm
— when check completed, reconnect vacuum hoses
— reconnect idle stabilizer plugs

Distributor vacuum unit, leak checking

Work sequence

— connect vacuum tester between intake manifold and retard connection on vacuum unit
— plug vacuum hose for retard connection
— set vacuum tester to allow vacuum to pass through

— start engine and run at idle
— disconnect hose from advance connection on vacuum unit
— set vacuum tester so that it holds vacuum on side connected to vacuum unit

Note

Vacuum registered on tester must not drop by more than 10% within 1 minute

— connect vacuum tester between throttle valve housing and advance connection on vacuum unit
— set vacuum tester to allow vacuum to pass through
— increase engine speed until reading on vacuum tester is higher than 240–280 mbar (180–210 mm Hg)
— if no vacuum is registered on tester, check if connection at throttle valve housing is blocked
— set vacuum tester so that it holds vacuum on side connected to vacuum unit

Note

Vacuum registered on tester must not drop by more than 10% within 1 minute

Vacuum advance angle, checking

Work sequence

— connect SIEMENS tester or equivalent (or tach and timing light) according to manufacturer's instructions
— connect vacuum tester between throttle valve housing and vacuum advance unit connection
— set vacuum tester to allow vacuum to pass through

— disconnect plugs from idle stabilizer and connect together
— start engine and adjust idle speed to 900 rpm
— if SIEMENS tester or equivalent is being used, read off indicated advance angle (basic angle)

— if using timing light, flash scale and note advance angle (basic angle)
— increase engine speed until reading on vacuum tester is higher than 240-280 mbar (180-210 mm Hg)
— switch vacuum tester so that tester holds vacuum on side connected to vacuum unit

— let engine continue to run at idle and readjust to 900 rpm if necessary
— reduce vacuum on vacuum tester to 240-280 mbar (180-210 mm Hg) or 90-160 mbar 70-120 mm Hg)
— note advance angles
— determine vacuum advance by subtracting basic advance angle from measured advance angle

Example

last advance angle measured
(−) minus basic advance angle
(=) vacuum advance

— compare vacuum advance angles with specified values on chart page 28.9)
— reconnect vacuum hoses and adjust idle speed
— reconnect idle stabilizer

Vacuum retard angle, checking with SIEMENS 451 tester or equivalent

Work sequence

— connect tester according to manufacturer's instructions
— disconnect plugs from idle stabilzer and connect together
— check ignition timing and adjust if necessary

— pull both vacuum hoses off distributor vacuum unit and plug retard hose
— adjust idle speed to 900 rpm
— note indicated retard angle on tester

— add 5° to indicated retard angle
— compare with specifications in chart for retard **end** (see page 28.9)
— reconnect vacuum hoses and adjust idle speed to 850-950 rpm
— reconnect plugs to idle stabilizer

Vacuum retard angle, checking with timing advance tester

Work sequence

— connect tachometer and timing advance tester according to manufacturer's instructions
— disconnect plugs from idle stabilizer and connect together
— start engine and flash ignition timing mark and note

— pull vacuum retard hose off vacuum unit and plug hose
— adjust idle speed to 900 rpm
— flash timing mark again and bring mark back to original setting by turning knob on timing advance tester

— read off retard angle and compare with specifications in chart (see page 28.9) for retard **end**
— reconnect vacuum hose and adjust idle speed to 850-950 rpm
— reconnect plugs to idle stablizer

Hall control unit, checking

Work sequence

Test condition:

- ignition coil **OK**, ignition **OFF**



– disconnect both plugs from idle stabilizer and connect them together (arrow)

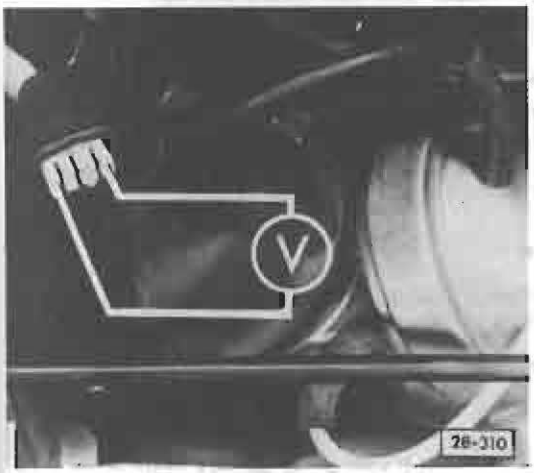

– remove connector from Hall control unit
– connect voltmeter with + (plus) to terminal 4 and with – (minus) to terminal 2 in connector
– turn ignition ON
  - spec = approx. battery voltage
  - if not, check for wire breaks and repair (see current flow diagram 97.12)
– turn ignition OFF
– reconnect connector to Hall control unit
– disconnect Hall generator connector from ignition distributor

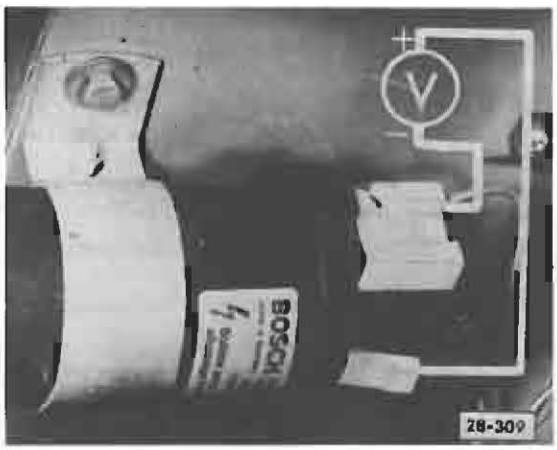

– connect voltmeter with + (plus) to terminal 15 and with – (minus) to terminal 1 of ignition coil
– turn ignition ON
  - spec. = 2 volts (min.) for about 1–2 seconds and then drops to 0 volts
  - if not, replace Hall control unit and ignition coil
– touch center wire of connector on distributor briefly to ground
  - indicated voltage must increase briefly to 5–6 volts
  - if not, check for wire break in center wire and repair or replace Hall control unit if wire is OK
– turn ignition OFF



– connect voltmeter to outer terminals of Hall generator connector
– turn ignition ON
  - spec. = 5 volts (min.)

Note

If readings are within specifications, but defect still exists, replace Hall control unit or check for wire breaks between Hall generator connector and Hall control unit; if necessary, repair

Hall generator, checking

Test conditions:

- disconnect both wire plugs from idle stabilizer and connect them together
- Hall control unit OK
- ignition coil OK
- wiring between Hall control unit and ignition coil OK
- connector pins and sockets on Hall-generator

CAUTION

When working on vehicles with Hall ignition system, observe following precautions to prevent injury or damage to ignition system:

— do **not** touch or remove high tension wire when running or cranking engine
— disconnect ignition wires **only** when ignition is switched **off**
— test instruments should be connected/ disconnected **only** when ignition is switched **off**

— do **not** connect any condenser to terminal 1
— do **not** tow cars without disconnecting plugs on ignition control unit
— do **not** crank engine unitl high tension wire of distributor cap (terminal 4) is connected to ground with jumper wire (example: compression check, etc.)
— do **not** leave battery connected when electric welding on car
— do **not** substitute rotor of ignition distributor with one of different type
— when installing suppressor, use only 1000 ohms for high tension wires and 1000 to 5000 ohms for spark plug connectors

— do **not** wash engine when it is running
— do not use battery booster longer than 1 minute nor exceed 16.5 volts with booster

Note

Because internal resistance of tester and ambient temperature can influence readings, test should be done with V.A.G. 1315A tester, SUN VAT-40 or equivalent.
Specified values given are valid for ambient temperatures from 0 to 40°C (32 to 104°F).

CAUTION

Set tester to read voltage before connecting test leads.

— disconnect high tension wire from terminal 4 of distributor and connect to ground, using adapter cable

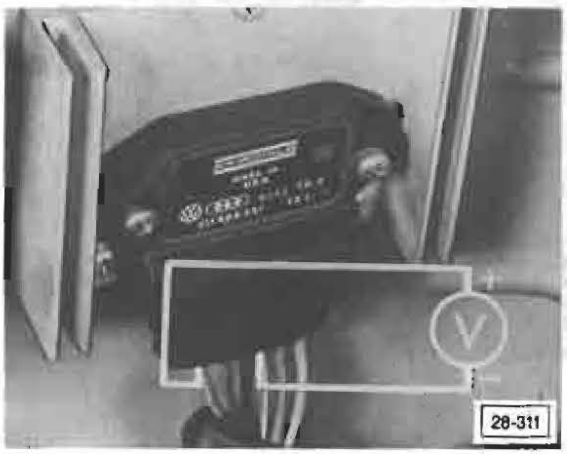

— pull rubber boot from control unit connector (with connector connected) as shown
— connect + (plus) wire of voltmeter (VAG 1315A or equivalent) to terminal 6 and — (minus) wire to terminal 3
— turn ignition On
— turn engine over slowly by hand (in running direction) and watch tester reading

Note

Position of Hall-generator aperture rotor (in distributor) changes when engine is turning.

- spec = **0 to 0.7 volt**
  primary current switch OFF — position of aperture rotor open to Hall generator

  1.8 volt up to battery voltage
  primary current switched ON — position of aperature rotor-closed to Hall generator
- if not, Hall generator is defective; replace

Note

Metal shavings or other debris between the ignition control unit and head sink can cause stress which may damage internal circuits of the control unit:
— when replacing ignition control unit, thoroughly clean heat sink before assembly.

Idle stabilizer, checking

Work sequence

- if engine is difficult to start, does not start, or engine misfires/cuts out, proceed as follows:

– disconnect both wire plugs from idle stabilizer and connect them together

- if engine starting troubles are eliminated:

– check contact pins and sockets of both idle stabilizer connectors for correct position or damage

- if OK: idle stabilizer unit must be defective; replace

– connect V.A.G. 1315A tester, SUN VAT-40 or equivalent according to manufacturer's instructions

– apply parking brake

WARNING

No one should be allowed to stand in front of vehicle during this test. Vehicle's wheels must be blocked

Vehicles with manual transmission

– apply foot brake

– start and accelerate engine(i.e. to 2500-3000 rpm) briefly

– **let engine idle** and notice ignition timing

– select 4th gear and slowly engage clutch

- as engine speed drops **below 940 rpm** ignition timing must move in direction "advance"

– if not, replace idle stabilizer

Vehicles with automatic transmission

– apply foot brake

– start and allow engine to warm up until idle speed drops **below 1000 rpm**

– switch ON all electrical consumers including air conditioner (if equipped)

– **let engine idle** and notice ignition timing

– place selector lever in a speed range

- as engine speed drops **below 940 rpm,** ignition timing must move in direction "advance"

– if not, replace idle stabilizer

Hall Ignition System Troubleshooting

Engine does not start or does not run properly

- starter speed normal
- fuel system OK

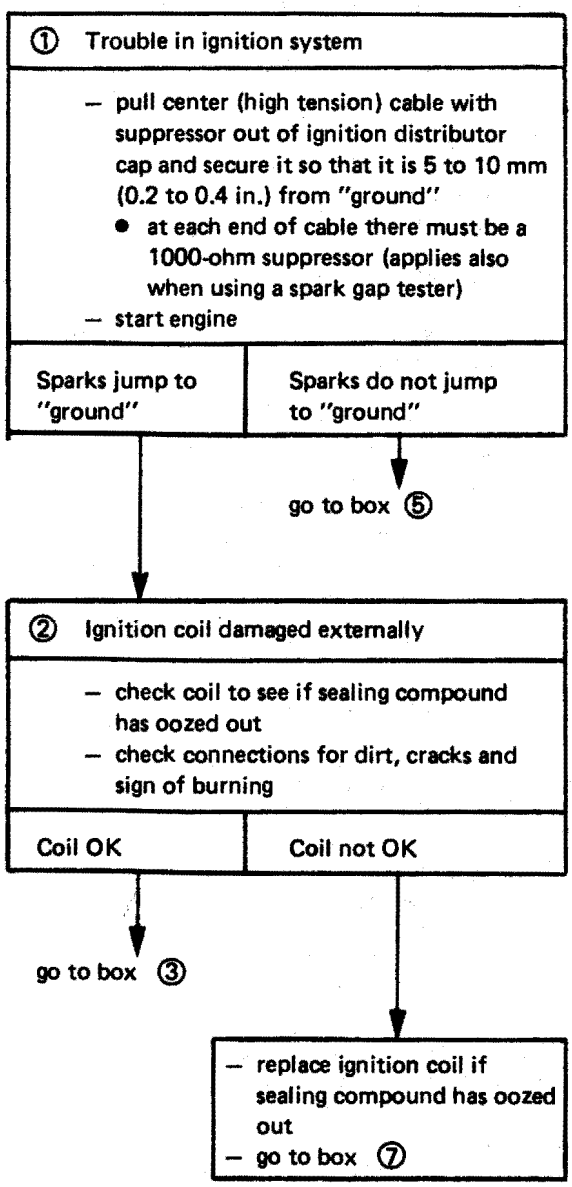

Note

In isolated cases only, there may be trouble in Hall ignition system which cannot be traced with this troubleshooting program.

In such cases, try replacing Hall control unit or Hall generator

CAUTION

When working on vehicles with Hall ignition system, observe following precautions to prevent injury or damage to ignition system:

— do **not** touch or remove high tension wire when running or cranking engine
— disconnect ignition wires **only** when ignition is switched **off**
— test instruments should be connected/ disconnected **only** when ignition is switched **off**

— do **not** connect any condenser to terminal 1
— do **not** tow cars without disconnecting plugs on ignition control unit
— do **not** crank engine until high tension wire of distributor cap (terminal 4) is connected to ground with jumper wire (example: compression check, etc.)
— do **not** leave battery connected when electric welding on car
— do **not** substitute rotor of ignition distributor with one of different type
— when installing suppressor, use only 1000 ohms for high tension wires and 1000 to 5000 ohms for spark plug connectors

— do **not** wash engine when it is running
— do **not** use battery booster longer than 1 minute nor exceed 16.5 volts with booster

③ Spark plugs, spark plug connectors, ignition cables, distributor cap, rotor arm defective

– check condition of parts
– check resistance in rotor arm, spark plug connectors and suppressors with ohmmeter
• specs: see Fig. 1, Fig. 2 and Fig. 3

Parts OK	Parts not OK

– replace defective parts

④ Ignition timing incorrectly set or centrifugal/ vacuum spark control defective

– check ignition timing

Ignition timing OK	Ignition timing not OK

No trouble in ignition system

– adjust ignition timing or repair ignition distributor

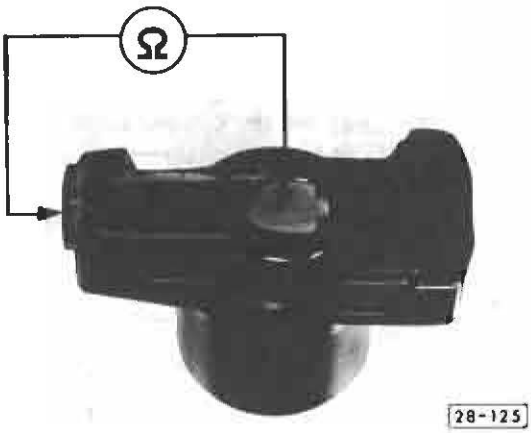

Fig. 1 Rotor arm: 1000 ± 400 ohms

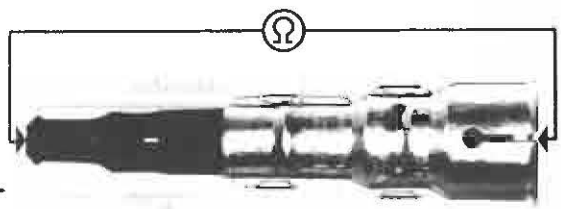

Fig. 2 Spark plug connectors:
• 1000 ± 400 ohms (not suppressed) or
• 5000 ± 1000 ohms (suppressed)

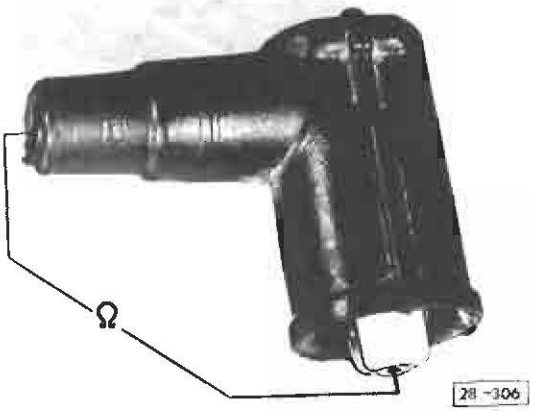

Fig. 3 Suppressor: 1000 ± 400 ohms

⑤ Idle stabilizer defective (delete this step if idle stabilizer is not installed)

– remove idle stabilizer plugs and connect together (see Fig. 4 arrow)
– start engine

Trouble still exists	Trouble no longer exists

– check contacts and sleeves in plugs for correct location and damage
  • if OK, install new idle stabilizer

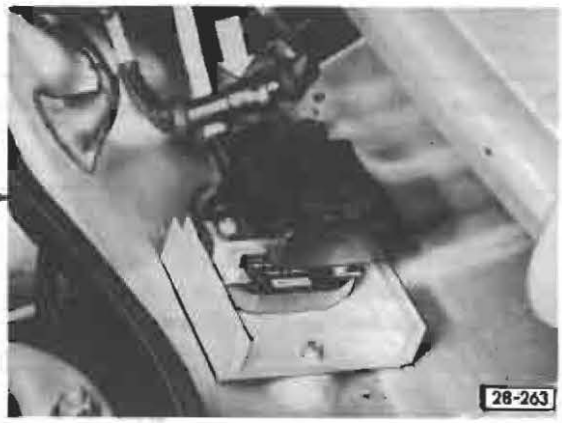

Fig. 4 Idle stabilizer

– connect plugs together (arrow)

⑥ Voltage supply for Hall control unit/Hall generator not OK

– disconnect Hall generator plug from ignition distributor
– connect voltmeter on outer contacts of plug (see Fig. 5)
– turn ignition ON
– read voltage
  • should be at least 5 V
– turn ignition OFF

Voltage OK	Voltage not OK

go to box ⑦

– reconnect Hall generator plugs and continue troubleshooting at box ⑩

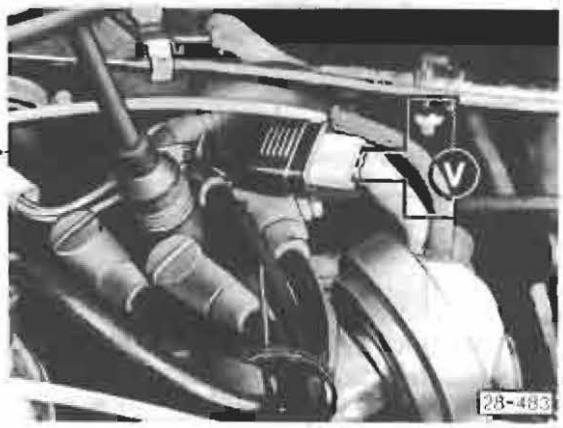

Fig. 5 Hall generator plug on ignition distributor (disconnected)

– connect voltmeter (watch plus and minus connection)

⑦ Hall control unit checking

- connect voltmeter to coil terminals 1 and 15 (see Fig. 6)
- turn ignition ON
- read voltage
  - should be 2 V and fall to 0 V after 1–2 seconds
- turn ignition OFF; leave voltmeter connected

Measured values not OK | Measured values OK

Measured values not OK → – replace Hall control unit

Measured values OK →

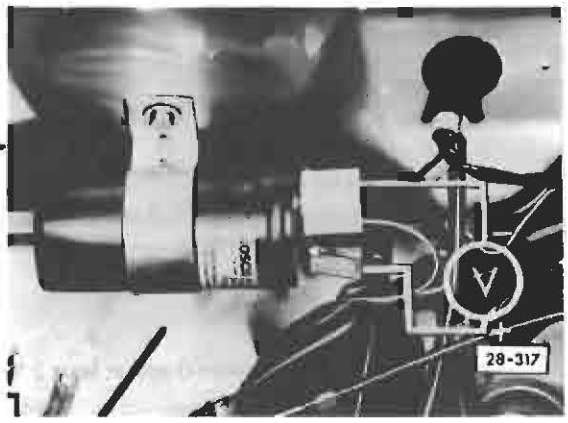

Fig. 6 Ignition coil

– connect voltmeter to terminals 1 and 15

⑧ Hall control unit checking

- insert metal pin in center contact of Hall generator plug
- turn ignition ON
- ground metal pin briefly (Fig. 7)
- read voltage
  - should increase briefly to at least 2 V
- turn ignition OFF; reconnect Hall generator plug to ignition distributor

Hall control unit OK | Hall control unit not OK

Hall control unit OK → go to box ⑨

Hall control unit not OK →

- check for open circuit in wiring using current flow diagram
  - if OK,
- replace Hall control unit

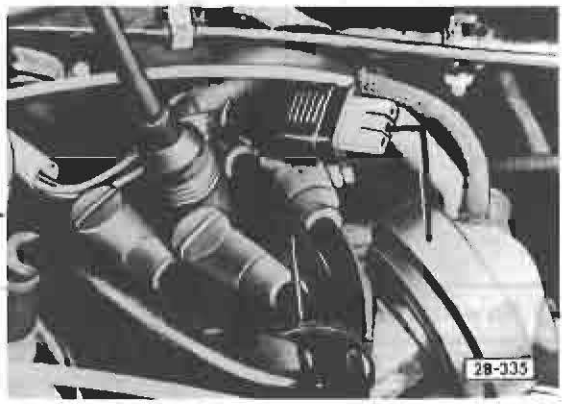

Fig. 7 Hall generator plug

– ground center contact with metal pin briefly (as shown)

⑨ Hall generator defective

- disconnect center (high tension) cable from distributor and "ground" it
- pull boot on Hall generator plug back and connect voltmeter to terminals 3 and 6 (plug remains in position) see Fig. 8
- turn ignition ON
- turn engine over by hand
- read voltage
  - should alternate between 0 and at least 2 V
- turn ignition OFF

Hall generator OK	Hall generator not OK
– replace ignition coil	– replace Hall generator (see page 7) or – replace ignition distributor

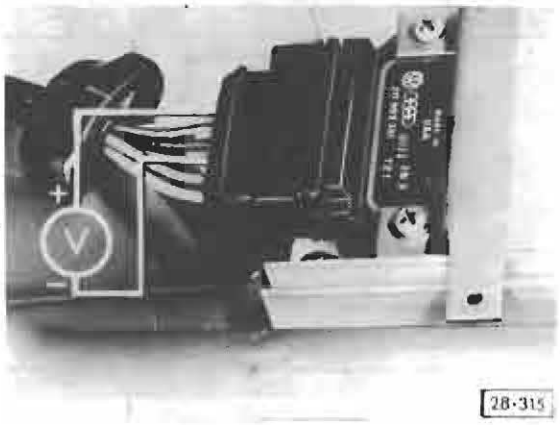

Fig. 8 Hall generator plug

– connect voltmeter to terminals 3 and 6

⑩ No voltage at Hall control unit

- disconnect plug from Hall control unit
- connect voltmeter to terminals 2 and 4 in plug (Fig. 9)
- turn ignition ON
  - voltage reading should be approx. battery voltage
- turn ignition off

Hall control unit OK	Hall control unit not OK
go to box ⑪	– check for open circuit in wiring from battery to Hall control unit using current flow diagram

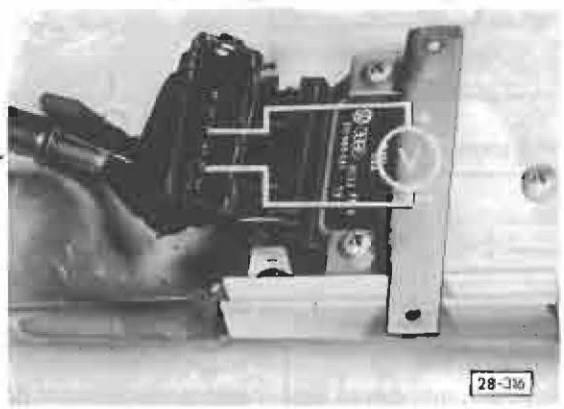

Fig. 9 Hall control unit plug

– connect voltmeter to terminals 2 and 4 in plug

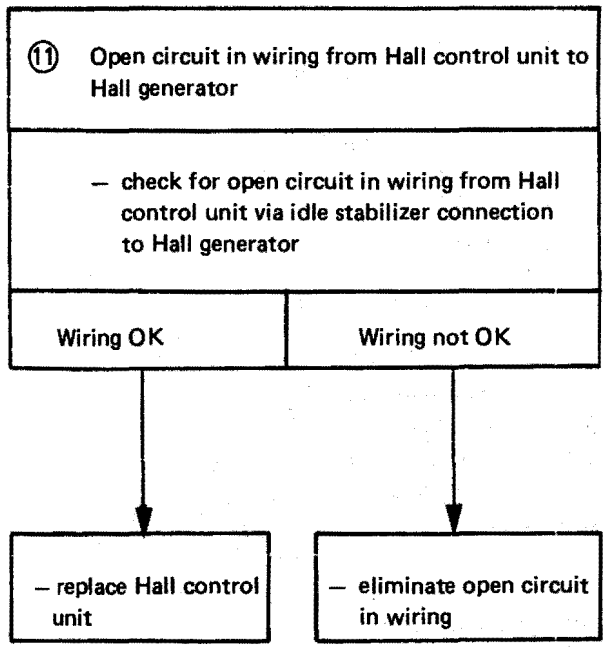
⑪ Open circuit in wiring from Hall control unit to Hall generator
– check for open circuit in wiring from Hall control unit via idle stabilizer connection to Hall generator
Wiring OK
Wiring not OK
– replace Hall control unit
– eliminate open circuit in wiring

Hall generator, replacing

Note

When replacing Hall generator, use repair kit which consists of following parts:

- Hall generator
- circlips
- washers
- pin



Fig. 1 Aperture rotor, removing/installing

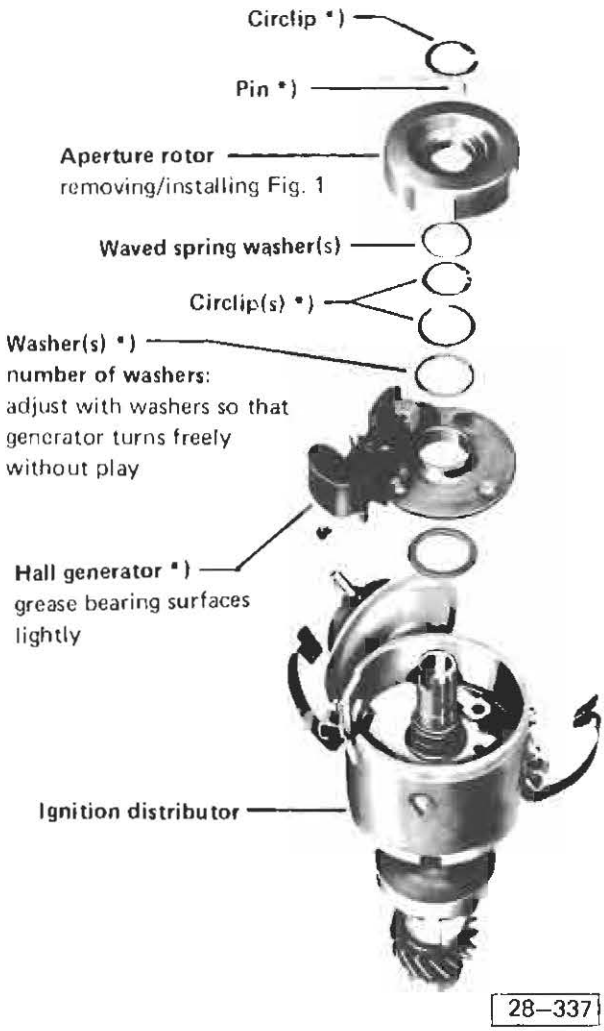

*) parts in repair kit

– to avoid bending rotor when prying off, insert screwdrivers through two opposing slots until they contact circlip
– check that aperture rotor turns freely after installation by turning distributor shaft
  - if aperture rotor is bent, it must be replaced
  - **aperture rotor identification:**
    4 gaps;
    marking: 046

Quick glow system—troubleshooting

Test condition: battery **OK**

Check voltage supply

—connect test light between No. 4 cylinder glow plug and ground
—disconnect wire from engine temperature sensor
—turn ignition switch **ON** (max. 15 seconds)
• test light must light up
—re-connect wire to temperature sensor

Test light does not light up	Test light lights up

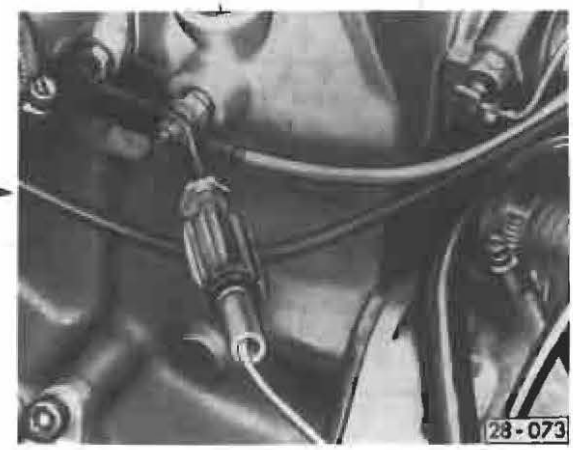

go to page 28.26

Check current supply to glow plugs

with tester such as SUN VAT-40, SUN SX-224 or equivalent	with test light

go to page 28.25

—connect power supply for tester
—place glow plug lead in test clamp
—press button for current test
—disconnect wire from engine temperature sensor
—turn ignition switch **ON** (max. 15 sec)

Current draw approx. 48 A	Current draw 0 or below 48 A



Glow plugs **OK**; trouble is in fuel system

Note

Current draw should stabilize at about 12 amps per glow plug. If total current is:

36 A—one glow plug bad
24 A—two glow plugs bad
12 A—three glow plugs bad
0 A—all glow plugs bad

These values can only be obtained with battery voltage **above 11.5 volts**

from page 28.24

Checking glow plugs with test light

— remove wire and bus bar from plugs
— connect test light to battery positive (+) terminal and touch test light probe to each glow plug in turn
  • light lights up; glow plug is **OK**
  • light does not light up; glow plug is inoperative, replace plug (tightening torque 30 Nm - 22 ft lb)



Note

If glow plug tip (arrow) is worn away, injector spray pattern may not be correct

—remove corresponding injector
—check spray pattern, opening pressure and leakage of injector, using tester US 1111; see also pages 23.9 and 23.10
—check that spray pattern is compact and well atomized when pump lever is operated with short rapid strokes (4–6 strokes/sec)
  • if **NO**
—clean injector and recheck spray pattern etc.
  • if still **NO**
—install **new** injector and **new** glow plug

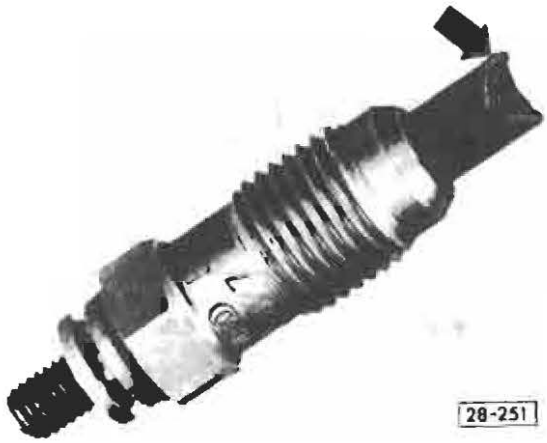

from page 28.24

Glow plug fuse defective

—check glow plug fuse with test light

Test light lights up • fuse **OK**	Test light does not light up • fuse **not OK**

—replace fuse

End

No voltage at terminal 30 on glow plug relay

—connect test light to terminal 30 on relay

Test light lights up	Test light does not light up

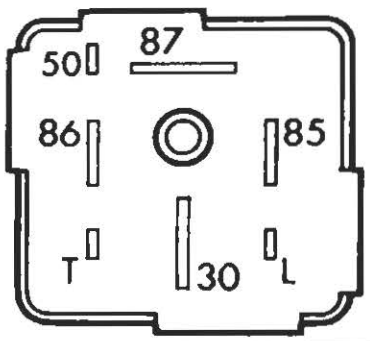

94-188

Possible causes:

- break in wire from terminal 30 to battery
- wire defective, replace

Glow plug relay not working

—connect test light to terminal 86 on relay
—turn ignition switch **ON**

Test light lights up	Test light does not light up

—repair connection from replay terminal 85 to ground; or —replace relay	—repair connection from fuse S 12 to relay terminal 86

Note

When engine is difficult to start, check operation of automatic delay glow period and preheat period during starting

- when temperature controlled preheat period has ended (glow plug light **out**) there should still be voltage at glow plugs for additional 6 to 7 seconds. Do **not** operate starter for this test. If no voltage is present at glow plugs, replace relay
- when starter is engaged there should be voltage at glow plugs. If no voltage, repair wire from glow plug relay terminal 50 to starter or replace glow plug relay
- check Diesel Current Flow Diagram

Glow plug light—troubleshooting

Glow plug light defective

Check glow plug light as follows:
—disconnect glow plug relay
—ground terminal **L** in relay socket
—turn ignition switch **ON**

Glow plug light lights up	Glow plug light does not light up

→ —replace glow plug light or check wire from relay terminal **L** to glow plug light → End

Glow plug relay or engine temperature sensor defective

Check operation of relay—see also Note on page 28.26
— disconnect glow plug wire
— disconnect wire from engine temperature sensor
— turn ignition switch **ON**
• glow plug light should light up for 25–30 seconds
— ground disconnected wire from engine temperature sensor
• glow plug light must go out

Glow plug light lights up	Glow plug light does not light up
—replace engine temperature sensor → End	—replace glow plug relay → End

CAUTION

To avoid glow plug damage from excessive voltage, **DO NOT** operate glow plug system while charging battery with external battery charger.

If using jumper cables to start Diesel equipped vehicles, external power source must not exceed vehicle system voltage (max. 13.5 V)

The torque specification for all glow plugs is:
• 30 Nm (22 ft lb)

This torque must **NOT** be exceeded because increasing the torque beyond the specification will cause closing of the ring gap, which can lead to premature failure of the glow plug.

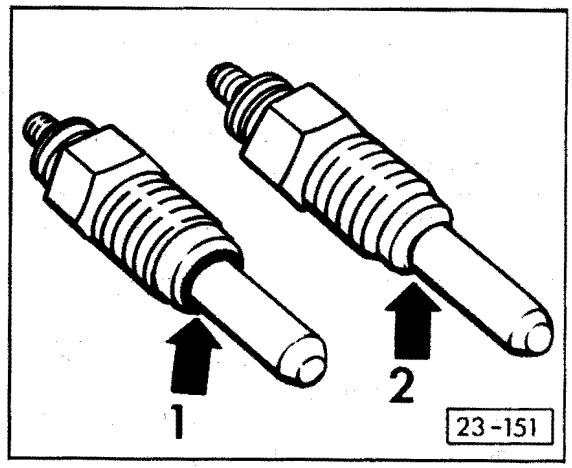

1 - Ring gap **OK** (arrow) approximately 0.5mm (0.02 in.)

2 - Ring gap closed (arrow) after being over-torqued

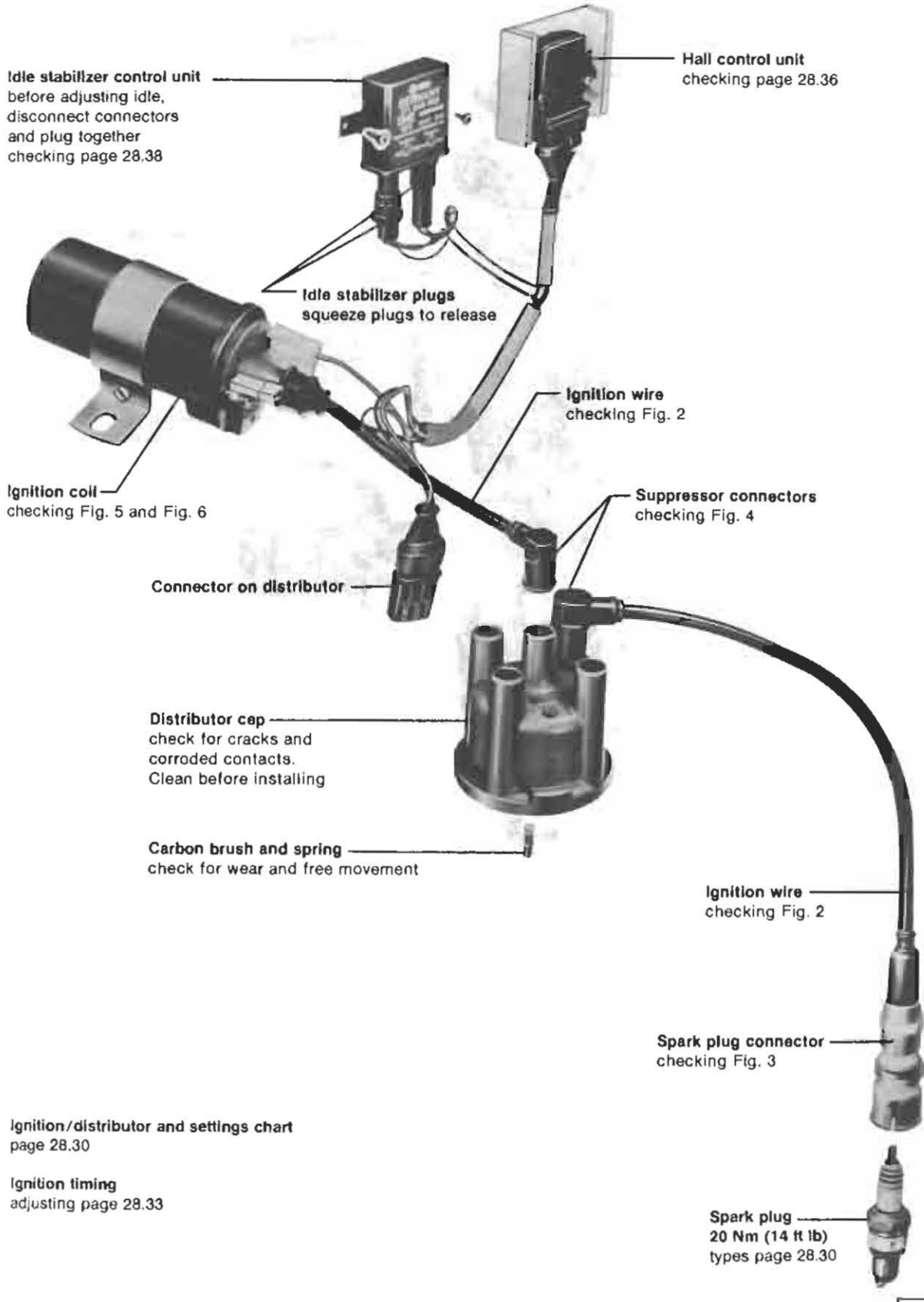

Ignition/distributor and settings chart
page 28.30

Ignition timing
adjusting page 28.33

28-341

WARNING

Do not touch or remove ignition coil wire when running or cranking engine.
Only disconnect wires of ignition system or connect/disconnect test instruments when ignition is turned **OFF**

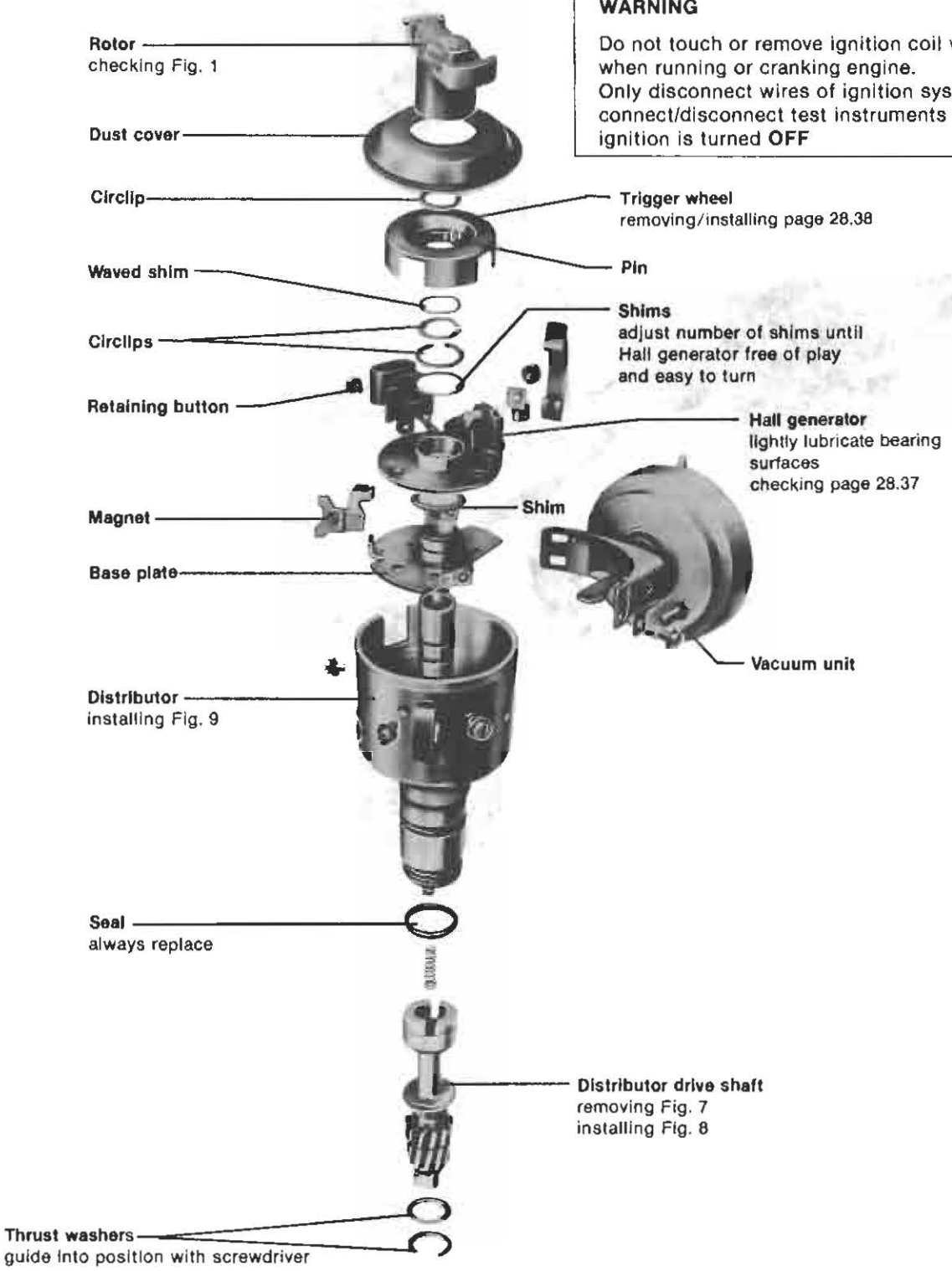

28-371

Engine code letters		DH
Distributor (Part No.)		025 905 205 D
Ignition timing		5 ± 1° ATDC
Timing mark location: crankshaft pulley		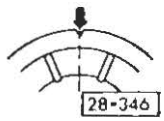
Idle speed Vacuum hoses connected		850 ± 50 rpm
Idle stabilizer control unit		electrical plugs disconnected from unit and connected together
Centrifugal advance (crankshaft degrees)	start	1050–1150 rpm
		16–20° at 2400 rpm
	end	21–25° at 3800 rpm
Vacuum advance	start	190–230 mbar (14.0–17.0 cm Hg)
	end	360 mbar (27.0 cm Hg) 12–16°
Vacuum retard	start	100–220 mbar (7.5–16.5 cm Hg)
	end	260–360 mbar (19.5–27.0 cm Hg) 9–11°
Spark plugs	Bosch Beru Champion	W 7 C 0 14 L-7 C N 288
Spark plug gap		0.7 + 0.1 mm (0.028 + 0.004 in.)
Spark plug tightening torque		20 Nm (14 ft lb)
Firing order		1—4—3—2

Ignition cable connectors
(new style)

To assure tight connections, ignition cables now have new style (M4) connectors, as illustrated below.

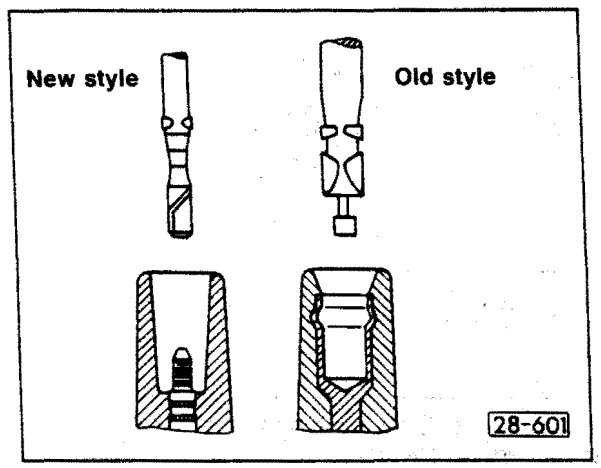

Connections at distributor cap, ignition coil, interference suppressors and spark plugs have all been changed to new style.

Note

Components with new style (M4) connectors are not interchangeable with old style. If replacement is required, install complete set with all connectors of same style.

CAUTION

When working on vehicles with Hall ignition system, observe following precautions to prevent injury or damage to ignition system:

- do **not** touch or remove high tension wire when running or cranking engine
- disconnect ignition wires **only** when ignition is switched **off**
- test instruments should be connected/ disconnected **only** when ignition is switched **off**

- do **not** connect any condenser to terminal 1
- do **not** tow cars without disconnecting plugs on ignition control unit
- do **not** crank engine until high tension wire of distributor cap (terminal 4) is connected to ground with jumper wire (example: compression check, etc.)
- do **not** leave battery connected when electric welding on car
- do **not** substitute rotor of ignition distributor with one of different type
- when installing suppressor, use only 1000 ohms for high tension wires and 1000 to 5000 ohms for spark plug connectors

- do **not** wash engine when it is running
- do **not** use battery booster longer than 1 minute nor exceed 16.5 volts with booster



Fig. 1 **Rotor, checking**

— check that resistance is **1000 ± 400 ohms**

Note

Rotor must be marked with R 1 for Hall generator equipped cars

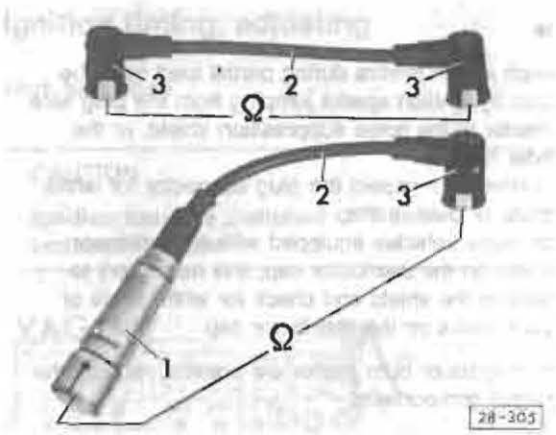

Fig. 2 **Ignition wires and connectors, checking**

— check wire 2 between ignition coil and distributor (including connectors 3)
  • resistance should be = 2000 ± 800 ohms
— check wires 2 between distributor and spark plugs (including connectors 3 and 1)
  • resistance should be = 6000 ± 1400 ohms
— if values are not as specified, check wires and connectors individually
  • resistance of wires (without connectors) must be = 0 ohm

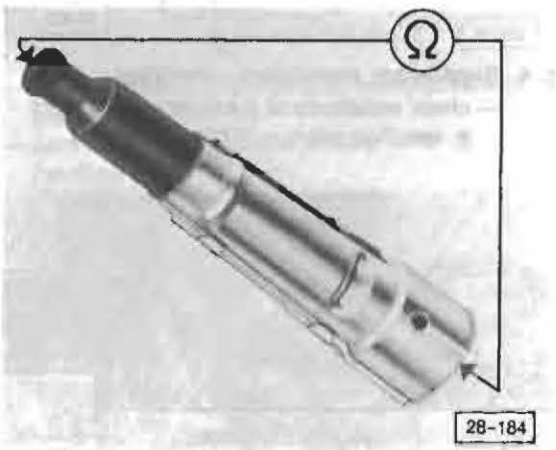

Fig. 3 **Spark plug connectors, checking**

— check connectors resistance
  • specified value = 5000 ± 1000 ohms

Note

A rough idle or misfire during partial load could be caused by ignition sparks jumping from the plug wire connector to the noise suppression shield, or the cylinder head.

— remove and inspect the plug connector for white spots or burn marks
— on those vehicles equipped with a suppressor shield on the distributor cap, it is necessary to remove the shield and check for white spots or burn marks on the distributor cap

If white spots or burn marks are present, replace the damaged components.

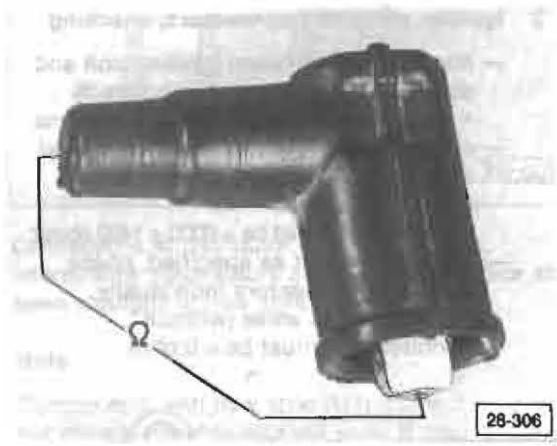

Fig. 4 Suppressor connectors, checking

— check resistance of supressor connectors
• specified value = 1000 ± 400 ohms

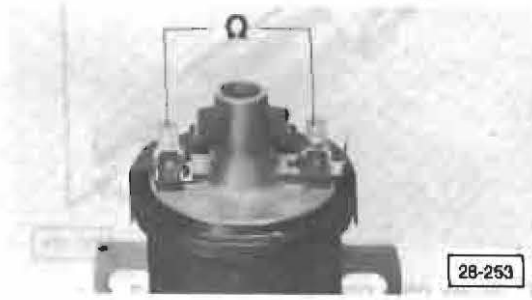

Fig. 5 Ignition coil primary resistance, checking

Note

If traces of leakage from ignition coil are visible check HALL control unit and replace ignition coil

— disconnect all wires from coil terminals
— connect ohmmeter between terminal **1** (−) and terminal **15** (+)
• resistance should be = 0.420 − 0.760 ohms
— check secondary resistance (Fig. 6)

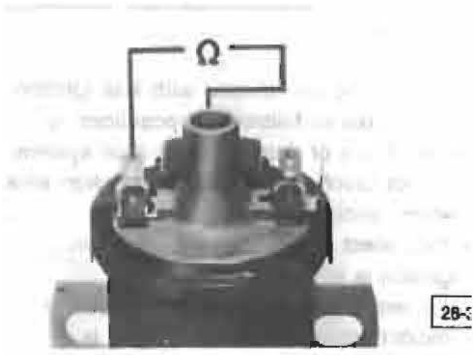

Fig. 6 Ignition coil secondary resistance, checking

— connect ohmmeter between terminal (−) and terminal **4**
• resistance should be = 2400 − 350 ohms

If **NO,** replace ignition coil

Note

If resistance readings are correct, but no high voltage occurs at ignition coil, check Hall genera and Hall control unit. If necessary, replace ignitio coil.



Fig. 7 Distributor drive shaft, removing

— use extractor with diameter 14.8-18 (0.583-0.728 in.)



Fig. 8 **Distributor drive shaft, installing**

— set crankshaft to TDC on No. 1 cylinder
— insert drive shaft so that off-set slot in top of drive shaft is pointing toward tapped hole (arrow)
• smaller segment points to water pump



Fig. 9 **Distributor, installing**

— set crankshaft to TDC on cylinder No. 1
— turn rotor until it is pointing to No. 1 cylinder mark on edge of housing
— install distributor
— clean distributor cap, check for cracks, signs of tracking and rotor tightness on shaft
— adjust ignition timing

Ignition timing, adjusting

Work sequence

CAUTION

Ignition must be switched OFF before connecting tester

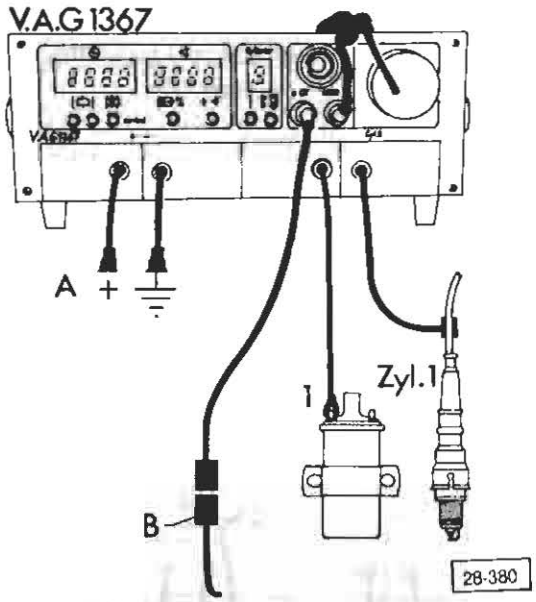

— connect tester according to manufacturer's instructions
— connect + (plus) cable to alternator or junction box



— disconnect idle stabilizer plugs from control unit (squeeze plugs to release—upper arrows)
— connect plugs together (lower arrows)
— adjust idle speed to 850 ± 50 rpm

■ go to next page

– **adjusting ignition timing with TDC sensor:**

- ignition timing is indicated directly on tester.
- **specification = 5° ATDC**

– **adjusting ignition timing with timing light:**

– shine timing light on timing mark.

- **mark on pulley must align with crankcase half parting line.**

Ignition distributor, checking centrifugal advance with TDC sensor

CAUTION

Ignition must be switched OFF before connecting tester.

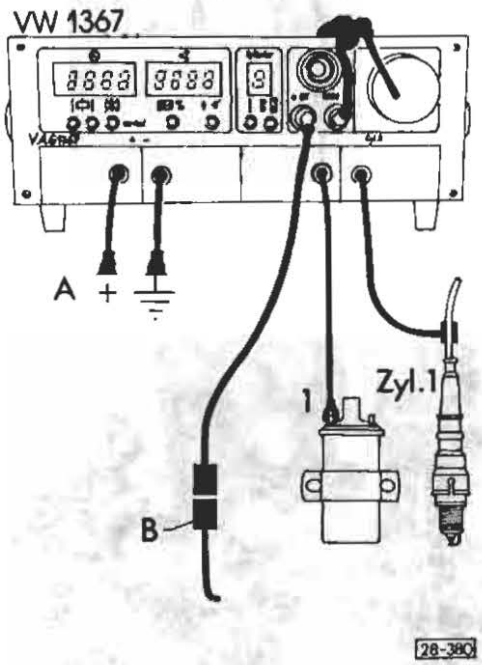

– connect tester according to manufacturer's instructions.
– connect positive lead to alternator or connection box.
– pull both hoses off distributor vacuum unit.

– disconnect plugs from idle stabilizer and connect together.
– start engine and adjust idle speed to 900 RPM.
– note basic advance angle shown on tester.
– increase engine speed slowly.
centrifugal advance is indicated by an increase in the number of degrees.
– increase engine speed to next test speed.
– read advance angle on tester.

Note

To determine centrifugal advance, subtract basic advance angle from last advance angle measured.

Example

last advance angle measured
(–) minus basic advance angle

(=) centrifugal advance

– compare centrifugal advance angle to specified value on page 28.30.
– repeat test at other test speeds.
– reconnect vacuum hoses when completed testing.
– adjust idle speed. See Repair Group 24.

Ignition distributor, checking centrifugal advance with timing light

– connect tester according to manufacturer's instructions.
– pull both hoses off distributor vacuum unit.
– disconnect plugs from idle stabilizer and connect together.
– start engine and adjust idle speed to 900 RPM.
– shine timing light on timing mark and note indicated angle (basic angle).

Note

Start of centrifugal advance is shown by movement of notch while increasing RPM.

– increase engine speed slowly to 1600 RPM.
– bring back notch to original setting by turning knob on tester. Read off advance value.

Note

To determine centrifugal advance, subtract basic advance angle from last advance angle measured.

Example

last advance angle measured
(–) minus basic advance angle

– repeat check at other test speeds.
– reconnect vacuum hose when test completed.
– adjust idle speed. See Repair Group 24.

Vacuum advance unit, checking for leaks

Work sequence

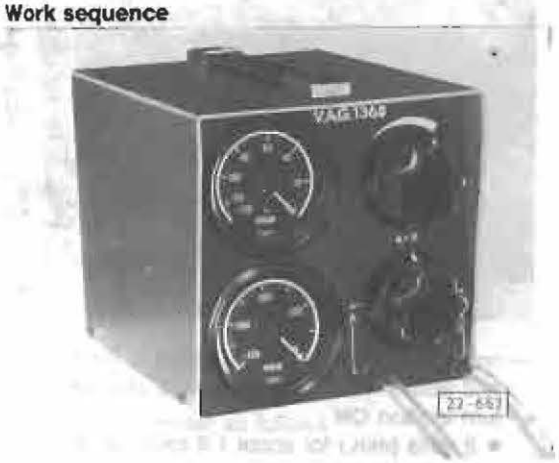

— connect vacuum tester VAG 1368 or equivalent according to manufacturer's instructions.
— run engine at approx. 2500 RPM and check that vacuum at throttle valve housing is reaching vacuum unit.

If **NO**, vacuum connection on throttle valve housing may be blocked.
— increase engine speed until vacuum tester indicates higher reading than 360 mbar (270mm Hg).
— switch vacuum tester so it holds vacuum on side connected to vacuum unit.

— turn engine **OFF**.
— vacuum reading on tester must not drop more than 10 % within 1 minute, otherwise vacuum unit or hose is defective.

Vacuum advance, checking

– connect VAG 1368 tester or equivalent according to manufacturer's instructions.
– connect vacuum tester between throttle valve housing and vacuum advance unit connection.
– set vacuum tester to allow vacuum to pass through.

– pull off hose from vacuum retard unit.
– disconnect plugs from idle stabilizer control unit and connect together.
– start engine and adjust idle speed to 900 RPM.

– checking with TDC sensor:

– note advance angle on tester (basic advance angle).

– checking with timing light:

– shine timing light on ignition timing scale and note indicated angle (basic angle).
– increase engine speed until reading on vacuum tester is higher than 360 mbar (270 mm Hg).
– switch vacuum tester so that it holds vacuum on side connected to vacuum unit.

– leave engine running at idle: 900 RPM
– reduce vacuum on vacuum tester to 360 mbar (270 mm Hg) or 190-230 mbar (140-170 mm Hg).
– note advance angles.
– determine vacuum advance by subtracting basic advance angle from measured advance angle.

Example

last advance angle measured
(–) minus basic advance angle

vacuum advance

– compare vacuum advance angles with specified values on page 28.30.
– readjust idle speed. See Repair Group 24.

Vacuum retard angle, checking

– connect vacuum tester VAG 1368 or equivalent according to manufacturer's instructions.
– disconnect plugs from idle stabilizer control unit and connect together.
– start engine.

– pull off hose from vacuum advance unit.
– check ignition timing; if necessary adjust to 5° ATDC.
– pull off hose from vacuum retard unit.

– check with TDC sensor:
– add 5° to indicated retard angle.
– compare with specifications on chart for retard **end** (see page 28.30).

– checking with timing light:

– shine timing light on timing mark again and bring mark back to original setting by turning knob on timing advance tester.
– read off retard angle and compare with specifications on chart for retard **end**. (See page 28.30.)

– reconnect vacuum hose to vacuum unit.
– reconnect plugs to idle stabilizer control unit.

Hall control unit, checking

Requirement
- ignition coil **OK**



— disconnect idle stabilizer plugs from control unit (squeeze plugs to release — **upper arrows**)
— connect plugs together (**lower arrows**)



— remove harness connector from Hall control unit
— connect multimeter **US 1119** with + (plus) to terminal **4** and with (minus) to terminal **2** in connector
— turn ignition **ON**
- approximately battery voltage

If NO
— check for wire breaks using wiring diagram and repair as necessary
— turn ignition **OFF**
— reconnect Hall control unit harness connector
— disconnect Hall generator harness connector from ignition distributor



— connect multimeter with + (plus) to term
and with – (minus) to terminal **1** of igniti
— turn ignition **ON**
- 2 volts (min.) for about 1-2 seconds ar
drops to 0 volts

If NO
— replace Hall control unit **and** ignition coil

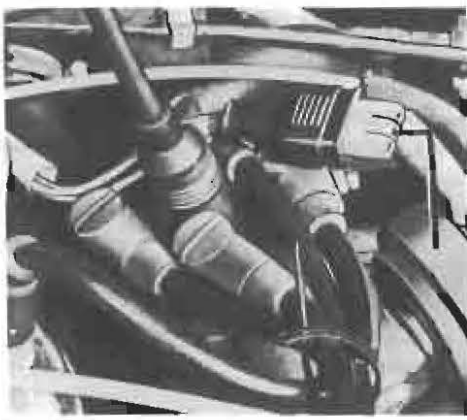

— touch center wire of connector on distrib
briefly to ground
- indicated voltage must increase briefly
volts (minimum)

If NO
— check for wire break in center wire and
necessary

If wire **OK**
— replace Hall control unit
— turn ignition **OFF**

more

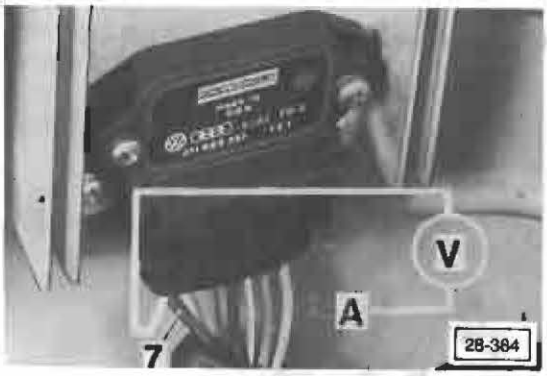

Note

Two different types of Hall control units can be installed.

— connect Multimeter as follows:

Fairchild, Bosch and Siemens — Hall control unit (Build #33)

— connection **A** to terminal **15** (+) of ignition coil and other connection to terminal **7**

Fairchild and Telefunken (AEG) — Hall control unit (Build #35)

— connection **A** to ground and other connection to terminal **7**
- multimeter must show **approximately battery voltage**

checking procedure regardless of type:
— touch center wire of connector on distributor briefly to ground (see illustr. 28-335)
- indicated voltage must drop briefly below 3 volts

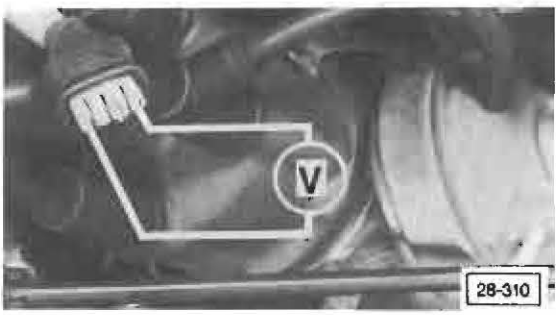

— connect multimeter to outer terminals of Hall generator connector
— turn ignition **ON**
- spec. = 5 volts (min.)

Note

If readings are within specifications, but defect still exists, replace Hall control unit or check for wire breaks between Hall generator connector and Hall control unit; if necessary, repair.

Hall generator, checking

Requirements
- disconnect both wire plugs from idle stabilizer and connect them together
- Hall control unit **OK**
- ignition coil **OK**
- wiring between Hall control unit and ignition coil **OK**
- connector pins and sockets on Hall-generator, distributor, and Hall control unit **OK**

Specified values given are valid for ambient temperatures from 0 to 40°C (32 to 104°F).

CAUTION

Switch multimeter to voltage range before connecting test leads.

— disconnect center coil wire from terminal **4** of distributor and connect to ground, using jumper wire

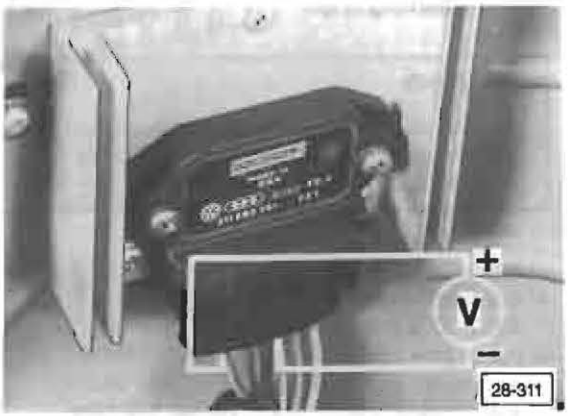

— pull rubber boot from control unit connector (with connector connected) as shown
— connect + (plus) wire of multimeter to terminal **6** and – (minus) wire to terminal **3**
— turn ignition **ON**
— turn engine over slowly by hand (in running direction) and watch tester reading
- voltage must fluctuate between 0 and 2 volts minimum

If **NO**
— replace Hall generator.

Note

Metal shavings or other debris between the ignition control unit and heat sink can cause stress which may damage internal circuits of the control unit:
— when replacing ignition control unit, thoroughly clean heat sink before assembly

Idle stabilizer, checking

Work sequence

Note

If engine is difficult to start, does not start, or engine misfires/stalls, proceed as follows:

— disconnect both wire plugs from idle stabilizer
— check contact pins and sockets of both idle stabilizer connectors for correct position or damage

— connect both plugs together
— start engine
  • if starting troubles are still experienced, idle stabilizer control unit is **not** defective
  • if engine starting troubles are eliminated, but troubles start again after reconnecting plugs to idle stabilizer unit, idle stabilizer unit must be defective; replace

— connect VW 1367 tester or equivalent according to manufacturer's instructions
— apply parking brake

WARNING

No one should be allowed to stand in front of vehicle during this test. Vehicle's wheels must be blocked

— apply foot brake
— start and accelerate engine (i.e. to 2500-3000 rpm) briefly
— let engine idle and note ignition timing
— select 4th gear and slowly engage clutch
  • as engine speed drops **below 940 rpm** ignition timing must move in "advance" direction
— if not, replace idle stabilizer control unit

Trigger wheel, removing/installin

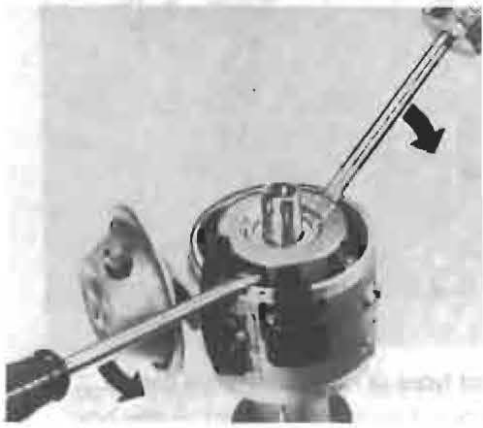

— remove circlip
— to avoid bending trigger wheel when p
off, insert screwdrivers through two o
slots until they contact circlip
— check that trigger wheel turns freely a
installation by turning distributor shaf
  • if trigger wheel is bent, it must be re

Ignition and injection system, repairing

Engine code: MV

- note safety precautions — page 28.31
- distributor data, spark plugs — page 28.41
- ignition timing, adjusting — page 28.42
- electrical testing of ignition and injection system — Group 24

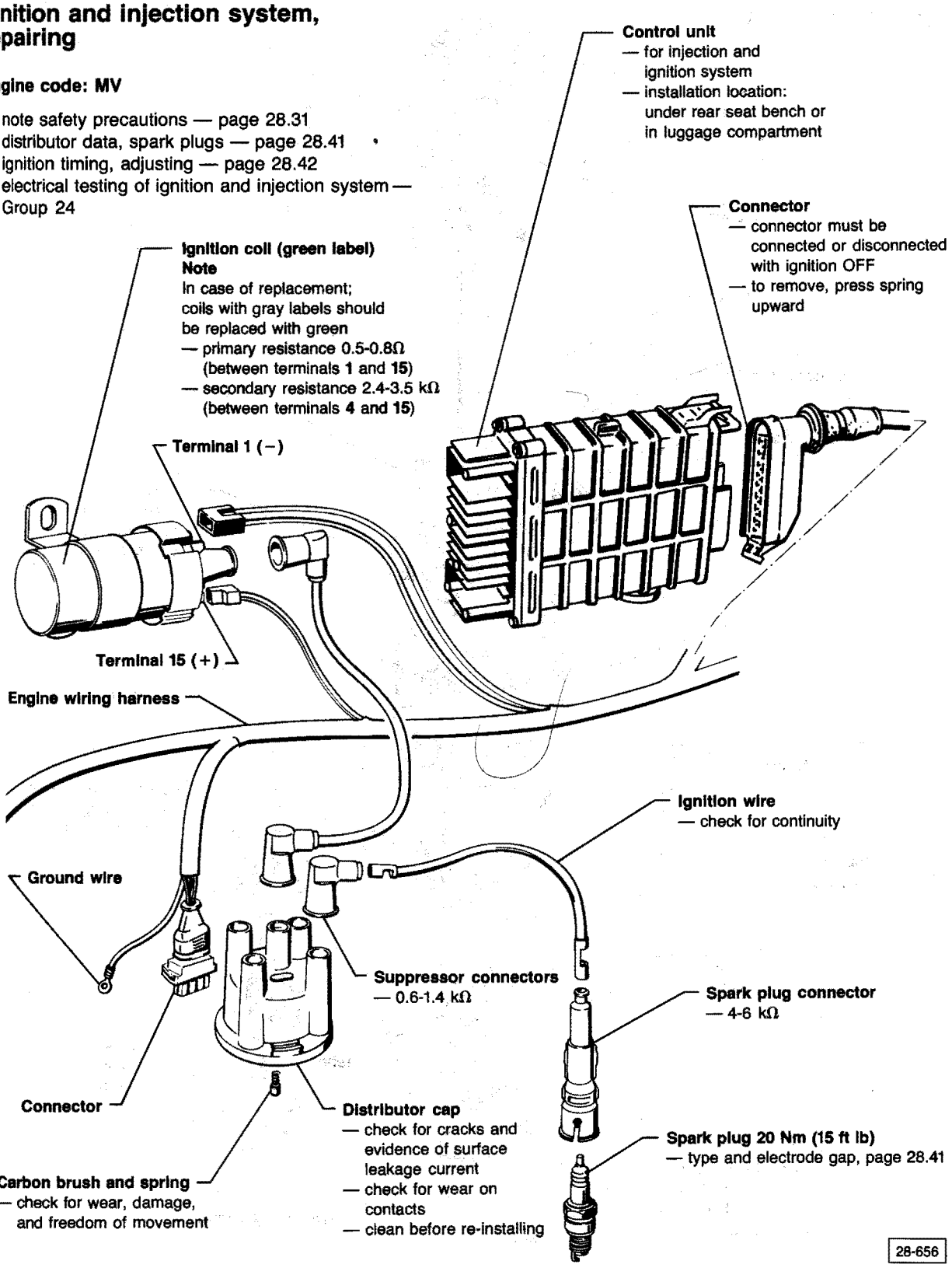

Ignition distributor

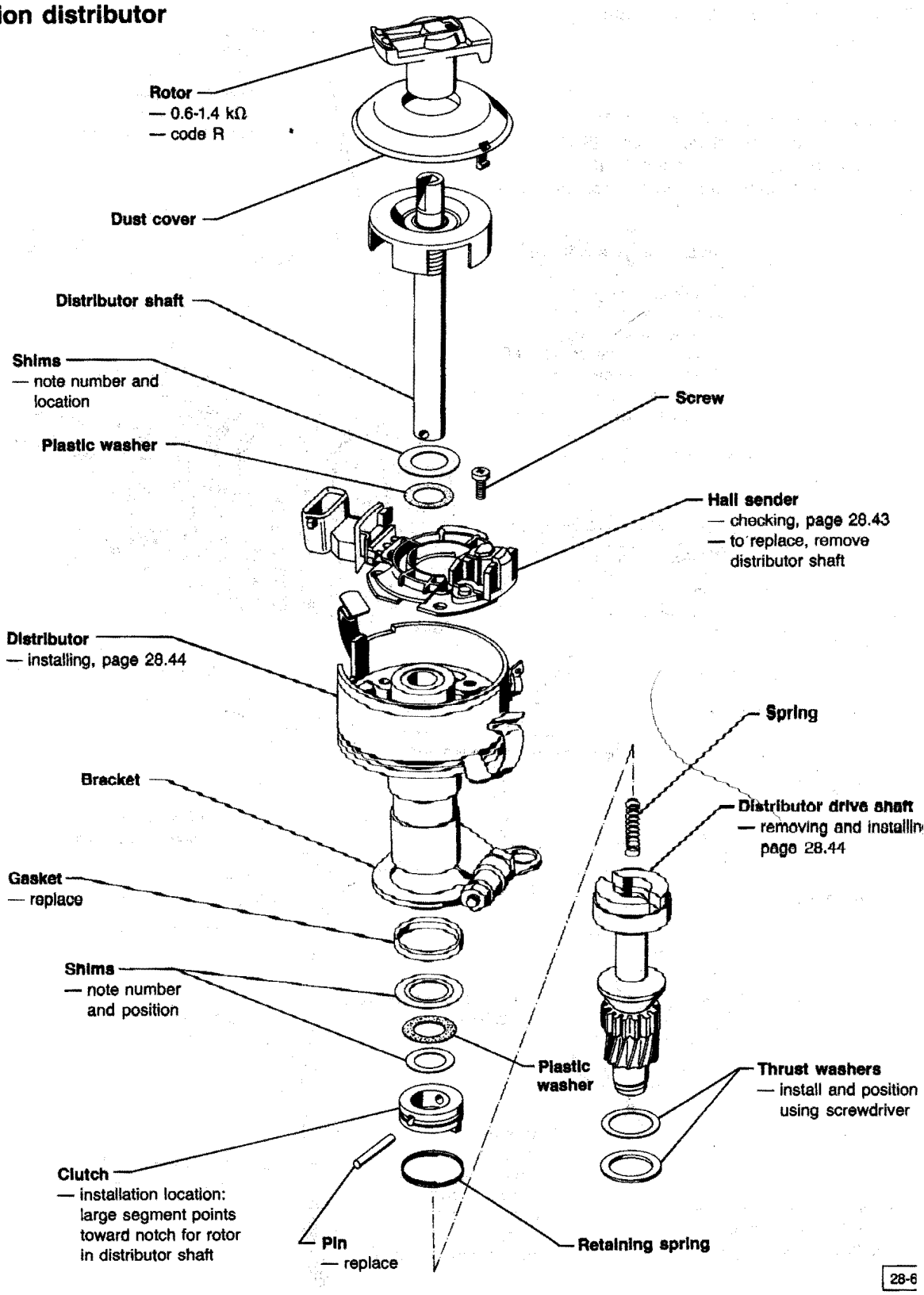

28-6

Introduction		October 1985
Engine code		MV
Part no.:	Ignition distributor	025 905 205 M
	Digifant control unit***	025 906 022D old 025 906 022/022A new
Ignition timing	Checking value	3° - 7° before TDC
	Adjusting value	5° ± 1° before TDC
Timing mark location		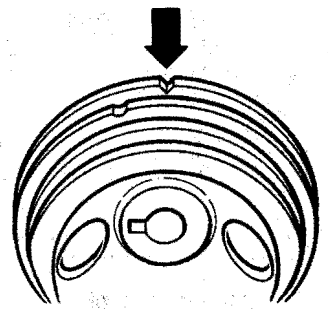 28-390
RPM*		2000 - 2500
Ignition adjustment** -- timing map --	RPM	Approx. 3000
	Degrees	35 ± 5°
RPM limit Switch-off RPM of digifant control unit	RPM	5600
Firing order	CYL.	1 - 4 - 3 - 2
Spark plugs (tightening torque: 20 Nm (14 ft lb)	Bosch Beru Champion	W 7 CCO 14L-7CU, 14L-7C N 288
Spark plug gap	mm (in)	0.7 ± .1 mm (0.028 ± 0.003 in)

*) Engine oil temperature 80° C, (176°F) connector of temperature sensor II disconnected with engine running.

**) Engine oil temperature 80°C, connector of temperature sensor II connected.

***) When replacing control unit always replace old control unit with newer version.

CAUTION

Part numbers are for reference only. Always check with your parts department for latest part information.

Ignition timing, checking

Requirement

Engine oil temp. minimum 80° C (176° F)

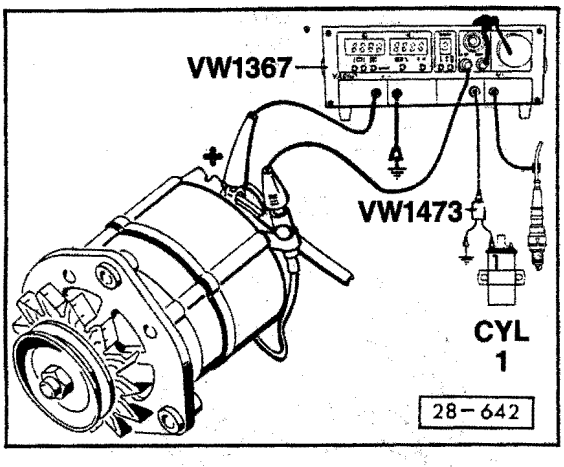

Fig. 1 Connecting test equipment

— connect test equipment for ignition timing and rpm as shown in 28-642

WARNING

Ignition must be switched off when connecting ignition timing tester and rpm display.

— start engine and allow to idle

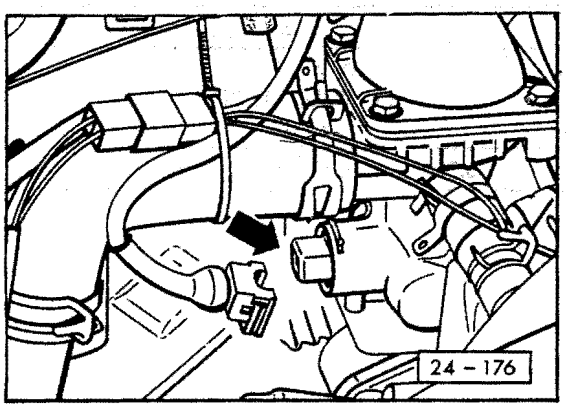

Fig. 2 Temperature sensor II

— disconnect temperature sensor II
— raise engine speed to **2000-2500** rpm
— record timing value displayed on tester

— reconnect temperature sensor II
— raise engine speed to **3000** rpm
— read timing on tester, subtract recorded value from this reading
• calculated value must be **35° ± 5°**

If NO
— check electrical connections for temperature sensor II, air flow sensor and digifant control unit according to wiring diagrams

Ignition timing, adjusting

Requirement

Engine oil temp. minimum 80° C (176° F)

— connect test equipment for ignition timing and rpm (see Fig. 1)

Note

Use adaptor VW 1473 for connecting tester VW 1367 to terminal **1** of ignition coil.

— start engine and allow to idle
— disconnect temperature sensor II (see Fig. **2**)
— check ignition timing at **2000-2500** rpm correct if necessary

Adjustment with TDC marker

Ignition timing is displayed directly on tester.

specifications:
• checking value **3° - 7° BTDC**
• adjusting value **5° ± 1 BTDC**

Adjustment with timing light

Notch on V-belt pulley must match separating line on crankcase
— correct idle setting if necessary

Hall sender, checking

Requirement

Electrical checks (wiring and component checks) OK

Voltage supply, checking

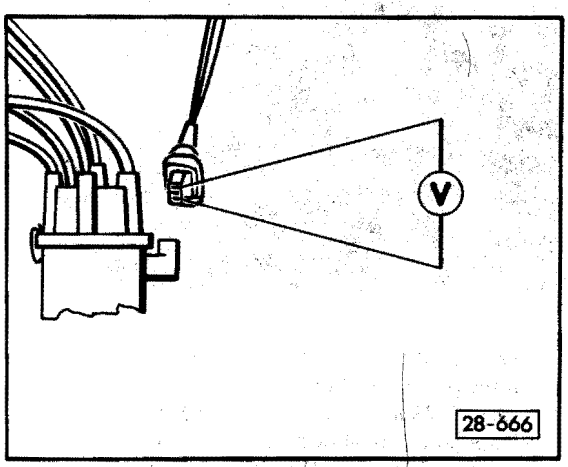

— disconnect Hall sender (distributor) and connect multimeter US 1119 to outer terminals of Hall sender connector

— switch ignition ON
- specified value: minimum 10 volts

If NO
— replace control unit
— switch ignition OFF

Function, checking

— slip back rubber boot from Hall sender connector
— ground coil wire (use adaptor if necessary)

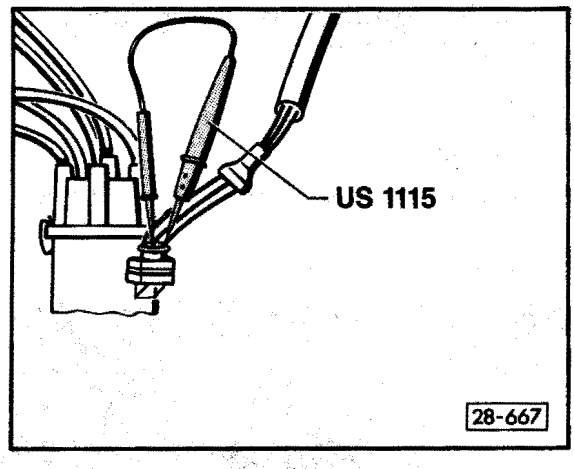

— connect voltage tester US 1115 to center and outer contacts of Hall sender connector (if necessary, use jumper wire)

— operate starter and check signal from Hall sender
- if LED flickers, Hall sender is OK

If NO
— replace Hall sender

Checking ignition switching function from control unit

Requirements

Ignition coil OK

Electrical checks (wiring and component checks) OK

See Group 24

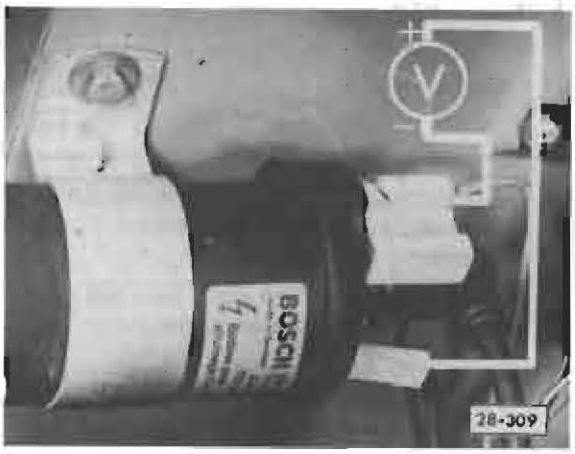

— connect digital multimeter US 1119 between terminal **1** (−) and terminal **15** (+) of ignition coil
— disconnect Hall sender (on distributor)
— switch ignition ON

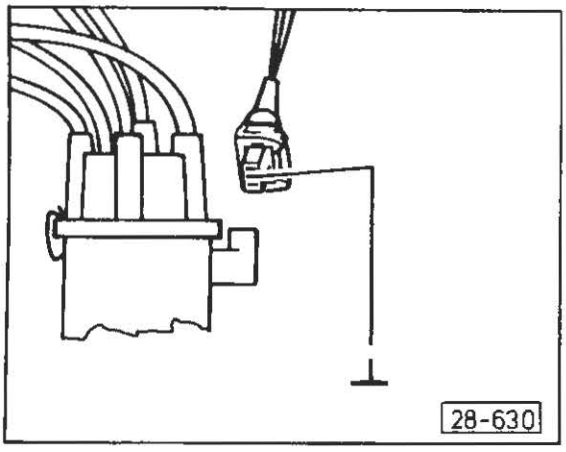

— hold center wire of connector from distributor to ground for approx. 3 seconds
- displayed voltage must increase briefly to approx. 4.5 volts

If NO
— replace control unit

Distributor drive shaft, removing and installing

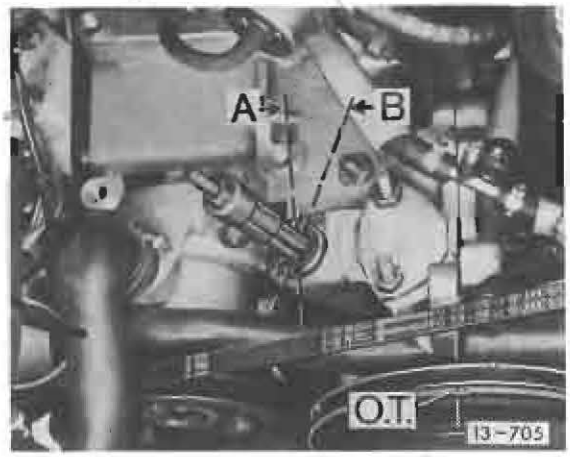

— set crankshaft to cylinder **1** TDC
— remove (or install) using 14.5-18.5 mm (0.57-0.73 in) diameter, extractor i.e. Kukko 21/2
— insert shaft as shown in position **A**
— push and twist until shaft seats
- should result in position **B**

Note

The small segment points toward coolant pump.

Distributor, installing



— set crankshaft to timing notch (cylinder 1)
— turn rotor far enough that it points toward mark for cylinder **1** on distributor housing

Index

Water-Cooled Gasoline

– Brake/Clutch fluid reservoir 30.3
– Clutch assembly 30.4
  controls 30.2
  diaphragm spring 30.6
  disc 30.7
  hydraulic system 30.2
  pressure plate 30.6, 30.7
– Release shaft bushing 30.3
– Roll pin 30.3

Diesel

– Brake/Clutch fluid reservoir 30.3
– Clutch assembly 30.5
  controls 30.2
  diaphragm spring 30.6
  disc 30.7
  hydraulic system 30.2
  pressure plate 30.6, 30.7
– Release shaft bushing 30.3
– Roll pin 30.3

Air-Cooled

– Brake/Clutch fluid reservoir 30.3
– Clutch assembly 30.4
  controls 30.2
  diaphragm spring 30.6
  disc 30.7
  hydraulic system 30.2
  pressure plate 30.6, 30.7
    modification 30.6, 30.7
– Release bearing 30.7
– Release shaft bushing 30.3
– Roll pin 30.3

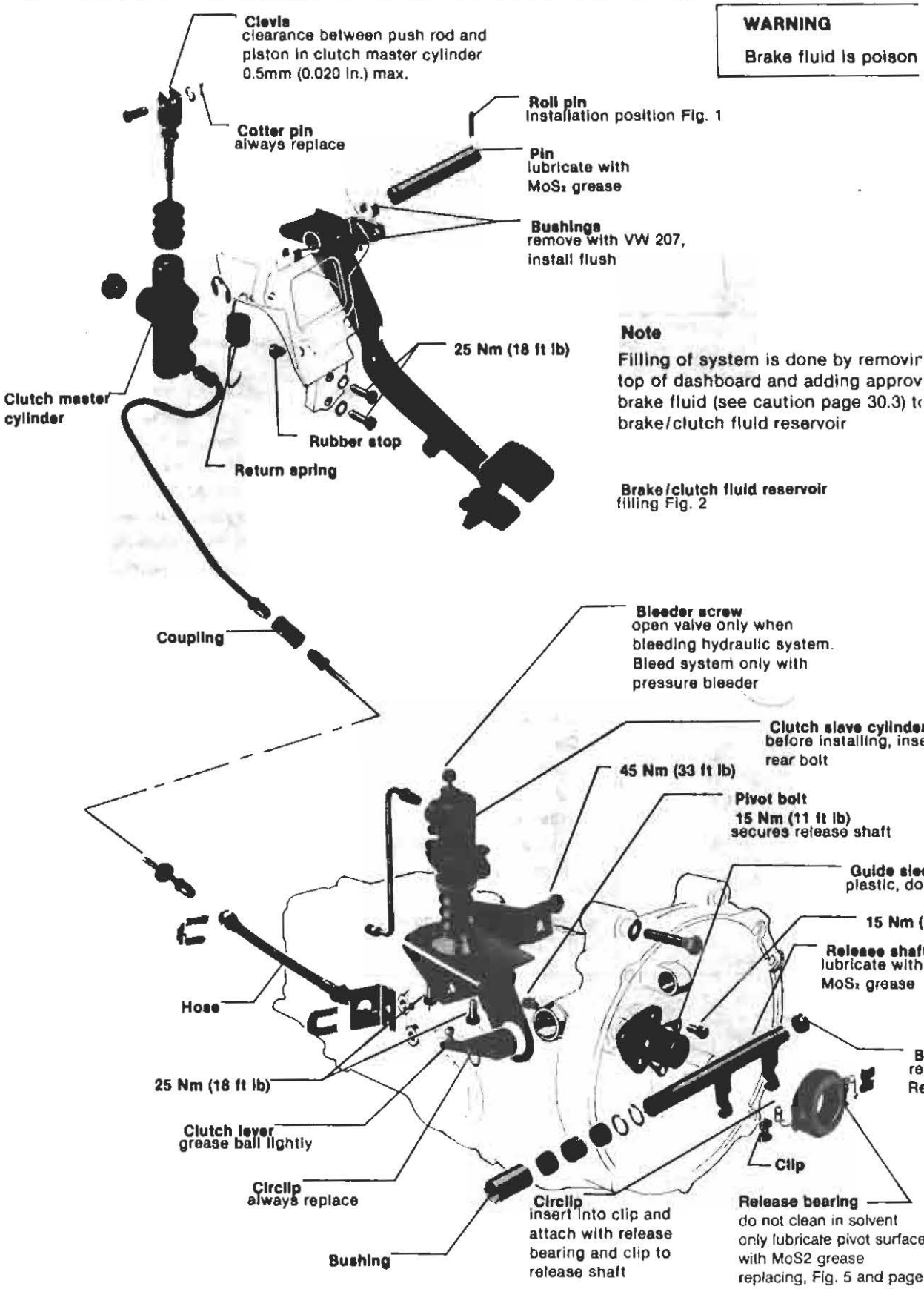

WARNING

Brake fluid is poison

Note

Filling of system is done by removir
top of dashboard and adding approv
brake fluid (see caution page 30.3) t
brake/clutch fluid reservoir

Brake/clutch fluid reservoir
filling Fig. 2

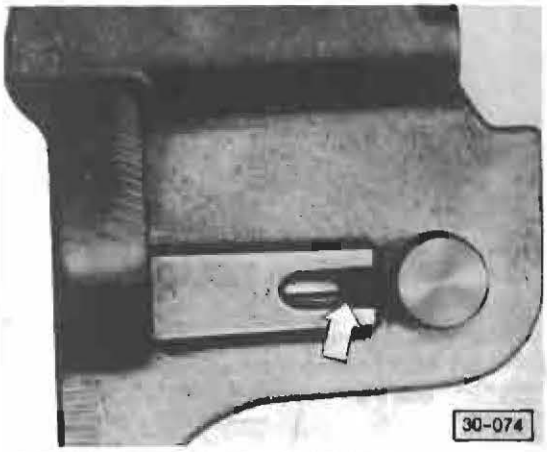

Fig. 1 **Roll pin, installation position**

- roll pin must be engaged in groove (arrow) on side of bracket

CAUTION

Brake fluid must not come into contact with paint.
Brake fluid absorbs moisture from air and must be replaced every 2 years.
Only use new unused DOT 3 or DOT 4 brake fluid according to MOTOR VEHICLE SAFETY STANDARD 116. Do not add or mix DOT 5 silicone type brake fluid with brake fluid in car, as severe component corrosion may result. Such corrosion could lead to clutch and brake system failure



Fig. 2 **Brake/clutch fluid reservoir, filling**

- grasp two recesses on back of dashboard cover and pull up
- fill with brake fluid (see above caution) until level is between "MAX" and "MIN"
- replace cover by inserting front edge first then press cover down firmly

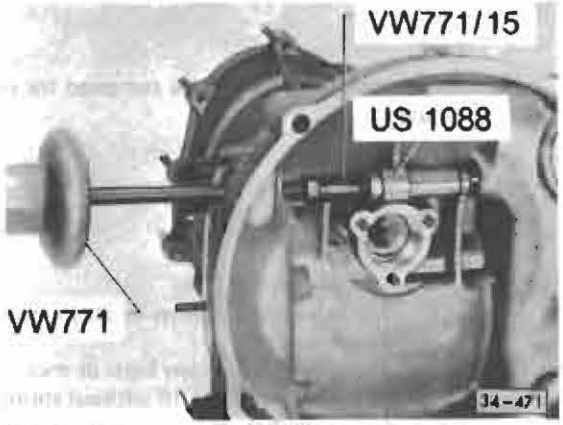

Fig. 3 **Release shaft bushing, removing**

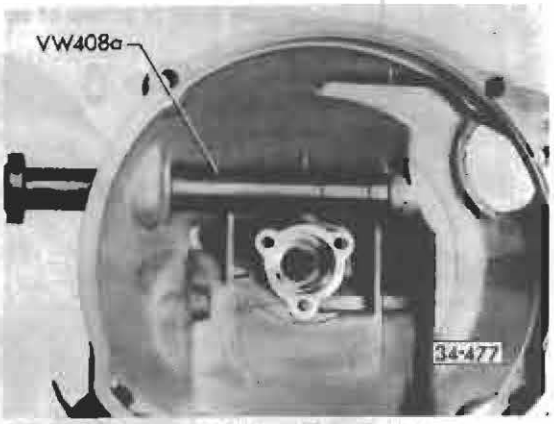

Fig. 4 **Release shaft bushing, installing**

— drive in flush

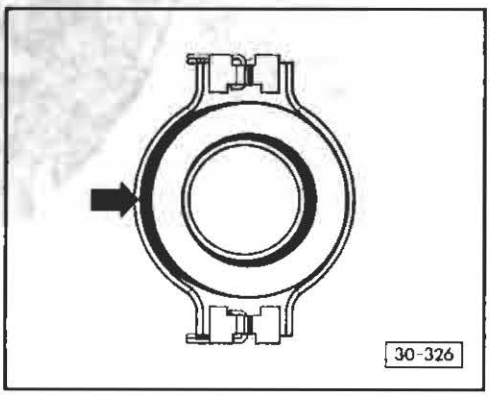

Fig. 5 **Release bearing, installing**

- new release bearings on which thrust ring is not centrally positioned to housing (**arrow**) can be installed
- thrust ring automatically centers itself on first application of clutch pedal

Note

Only transmission must be removed for clutch repairs

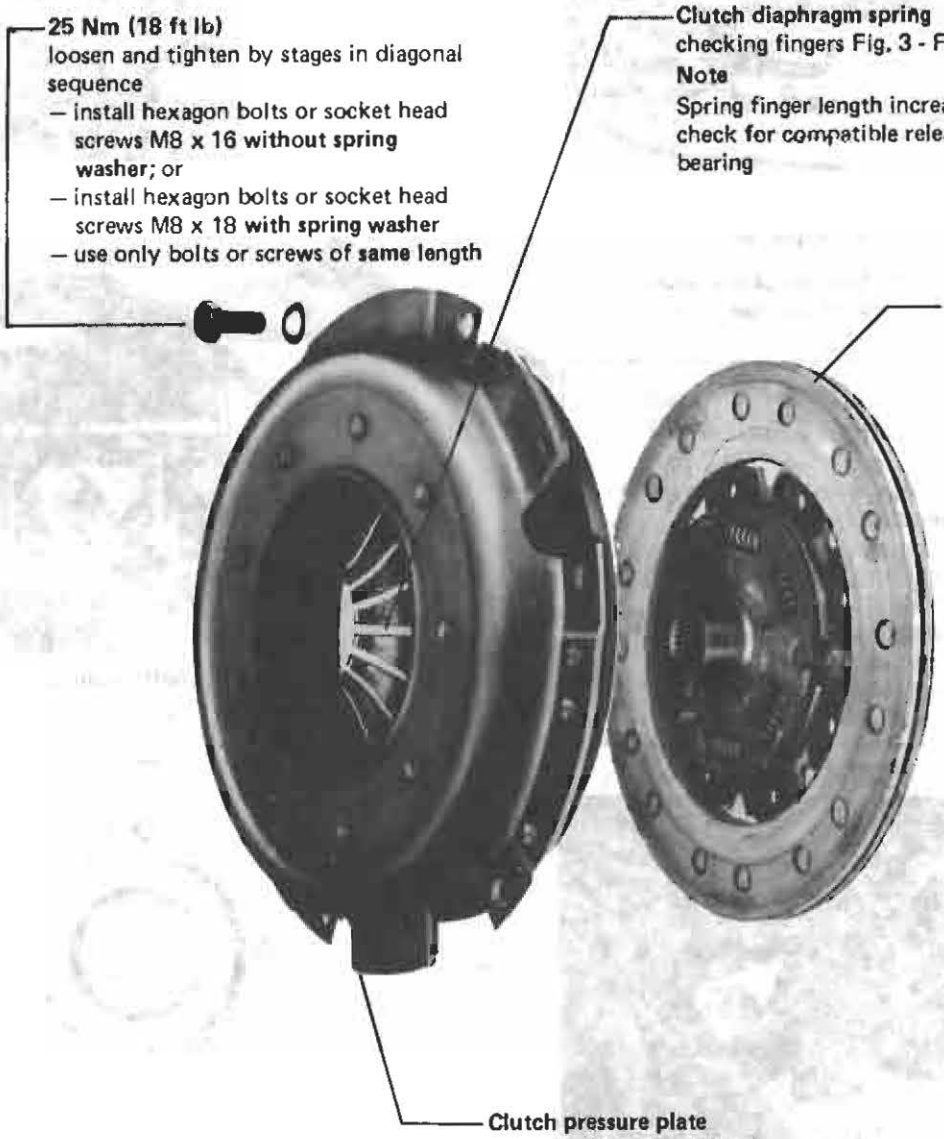

WARNING

Friction materials such as brake and clutch linings or brake pads may contain asbestos fibers.

Do not create dust by grinding, sanding or by cleaning with compressed air.

Avoid breathing asbestos fibers and asbestos dust.

Breathing asbestos may result in serious diseases, such as asbestosis or cancer.

Breathing asbestos may cause severe injury and death.

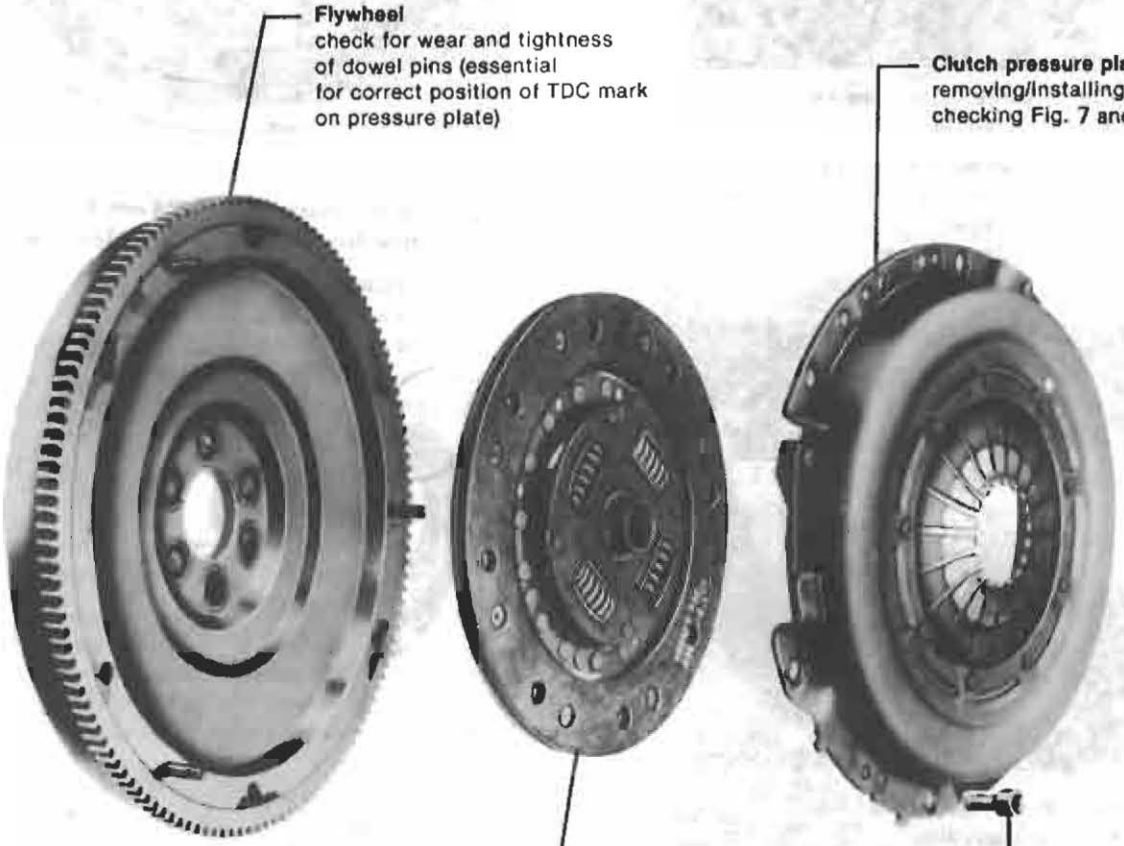

Flywheel
check for wear and tightness of dowel pins (essential for correct position of TDC mark on pressure plate)

Clutch pressure plate
removing/installing Fig. 2
checking Fig. 7 and Fig. 8

Clutch disc
centering Fig. 2
checking Fig. 9
installation position: spring cage faces pressure plate

25 Nm (18 ft lb)
loosen and tighten by stages and in diagonal sequence
—install hexagon bolts or socket head screws M 8 x 16 **without spring washer**; or
—install hexagon bolts or socket head screws M 8 x 18 **with spring washer**
—use only bolts or screws of **same length**

30-092

Note

For clutch repairs, transmission must be removed

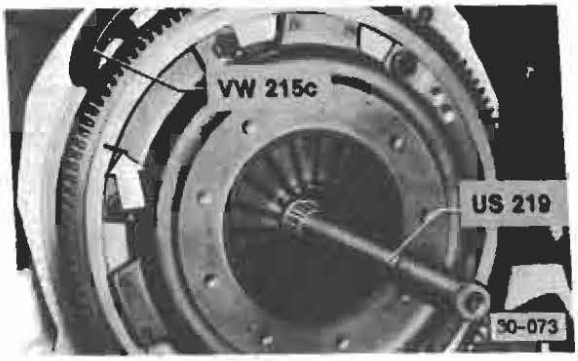

Fig. 1 Clutch pressure plate, Gasoline removing/installing

— attach flywheel retainer VW 215c
— mark position of pressure plate on flywheel (arrow)
— loosen bolts diagonally

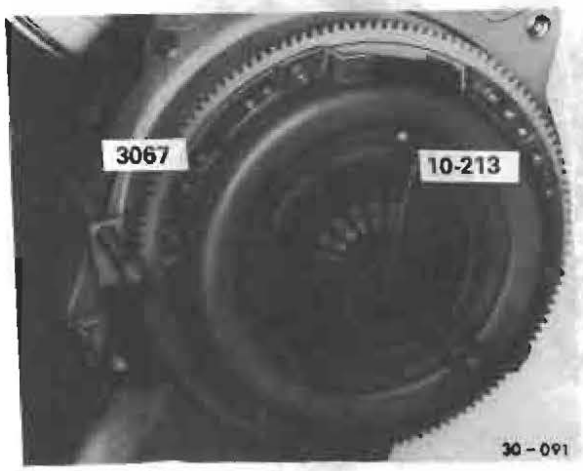

Fig. 2 Clutch assembly, Diesel removing/installing

—change retainer over when removing



Fig. 3 Clutch diaphragm spring, checking fingers

• scores (arrows) up to depth of 0.3 mm (0.012 in.) are OK

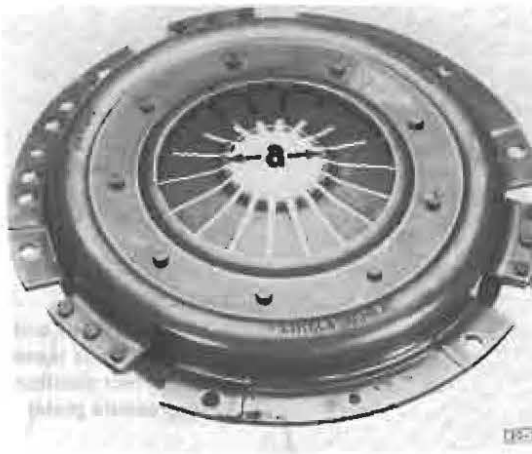

Fig. 4 Clutch pressure plate, 228 mm (9 in.) dia (modification only for air-cooled vehicles

distance a between fingers:
was = 55mm (2 3/16 in.) dia.
is now = 46mm (1 13/16 in.) dia.

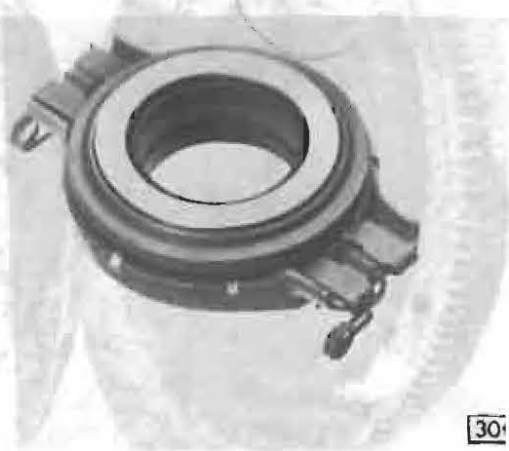

Fig. 5 Production release bearing, air-cooled

• contact surface diameter is 46 mm (1

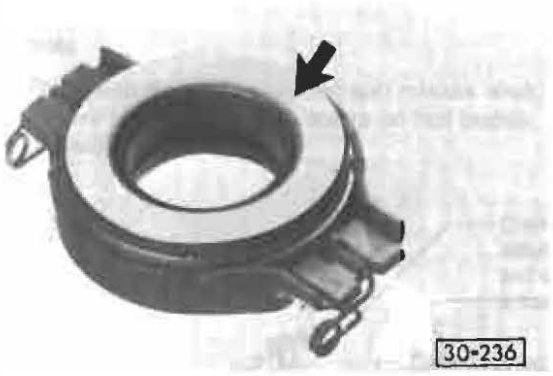

Fig. 6 **Replacement release bearing, air-cooled engines**

Note

Release bearing with wider contact surface (arrow) is the only bearing available as spare part. This release bearing will work with either old or new type pressure plates.

Engine replacement

If exchanging engines, be sure that wider-contact-surface release bearing is used if pressure plate is of older type [where a, Fig. 4, = 55 mm (2 3/16 in.) dia.]

CAUTION

Do not install release bearing having narrow contact surface [46 mm (1 13/16 in.) dia.] together with short-fingered pressure plate [a = 55 mm (2 3/16 in.) dia.]

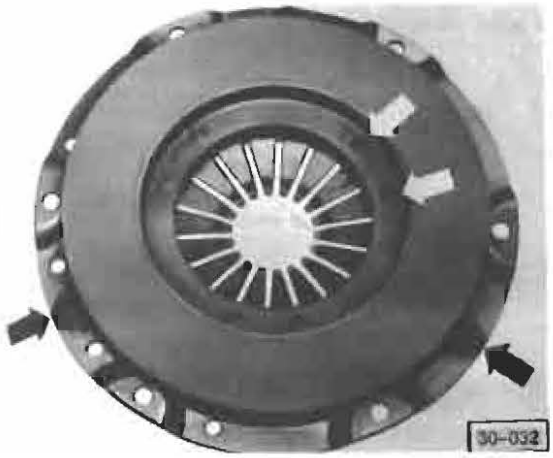

Fig. 7 **Clutch pressure plate, checking**

— check straps (black arrows) between plate and cover for cracks and tightness of rivets (white arrows)
• clutches with loose or damaged rivets must be replaced

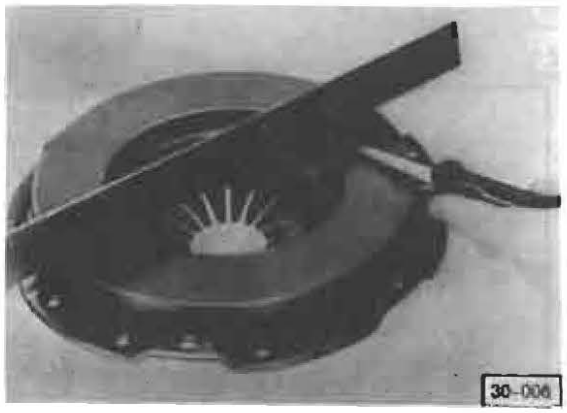

Fig. 8 **Clutch pressure plate, checking**

— check for cracks, burn marks and wear
• inward taper: 0.3 mm (0.012 in.) max.

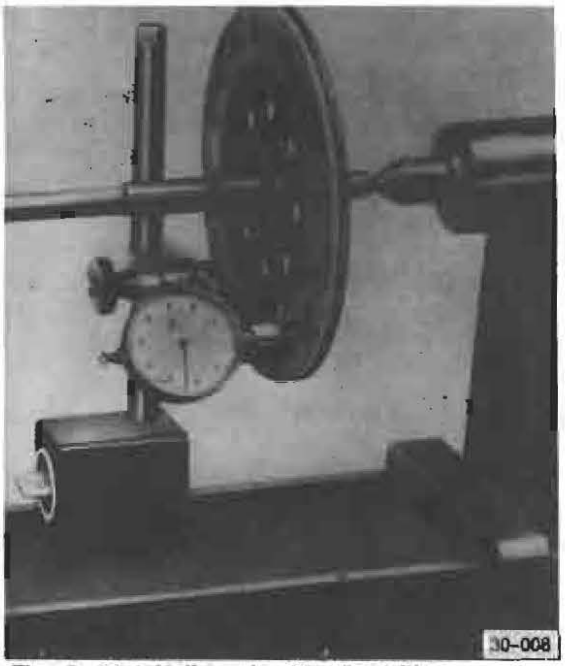

Fig. 9 **Clutch disc, checking/installing**

– check runout: 0.5 mm (0.020 in.) max.
• measured 2.5 mm (3/32 in.) from edge of disc
– check lining and splines for wear and rivets for tightness
– when installing, clean corrosion from transmission mainshaft and clutch disc splines
– lightly lubricate clutch splines with grease
• use grease part no. G 000 100
– place transmission into gear to lock mainshaft and temporarily install clutch disc to check movement
• spring cage must face pressure plate
• clutch disc must slide freely on mainshaft
– remove excess grease

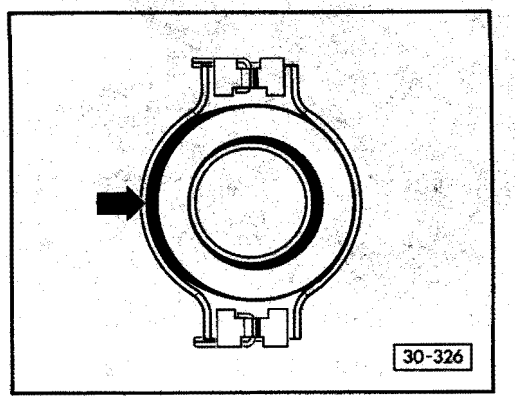

Fig. 10 Release bearing, installing

- New release bearing on which thrust ring is not centrally positioned to housing (**arrow**) can be installed
- thrust ring automatically centers itself on first application of clutch pedal

Note

For repairs on release bearing and release shaft, remove transmission. For repairs on foot pedals, remove instrument panel.

Clutch, bleeding

Connect brake bleeder **US 1116**
Operating pressure = 2-2.5 bar.

Leave bleeder valve open until brake fluid drains without any bubbles.

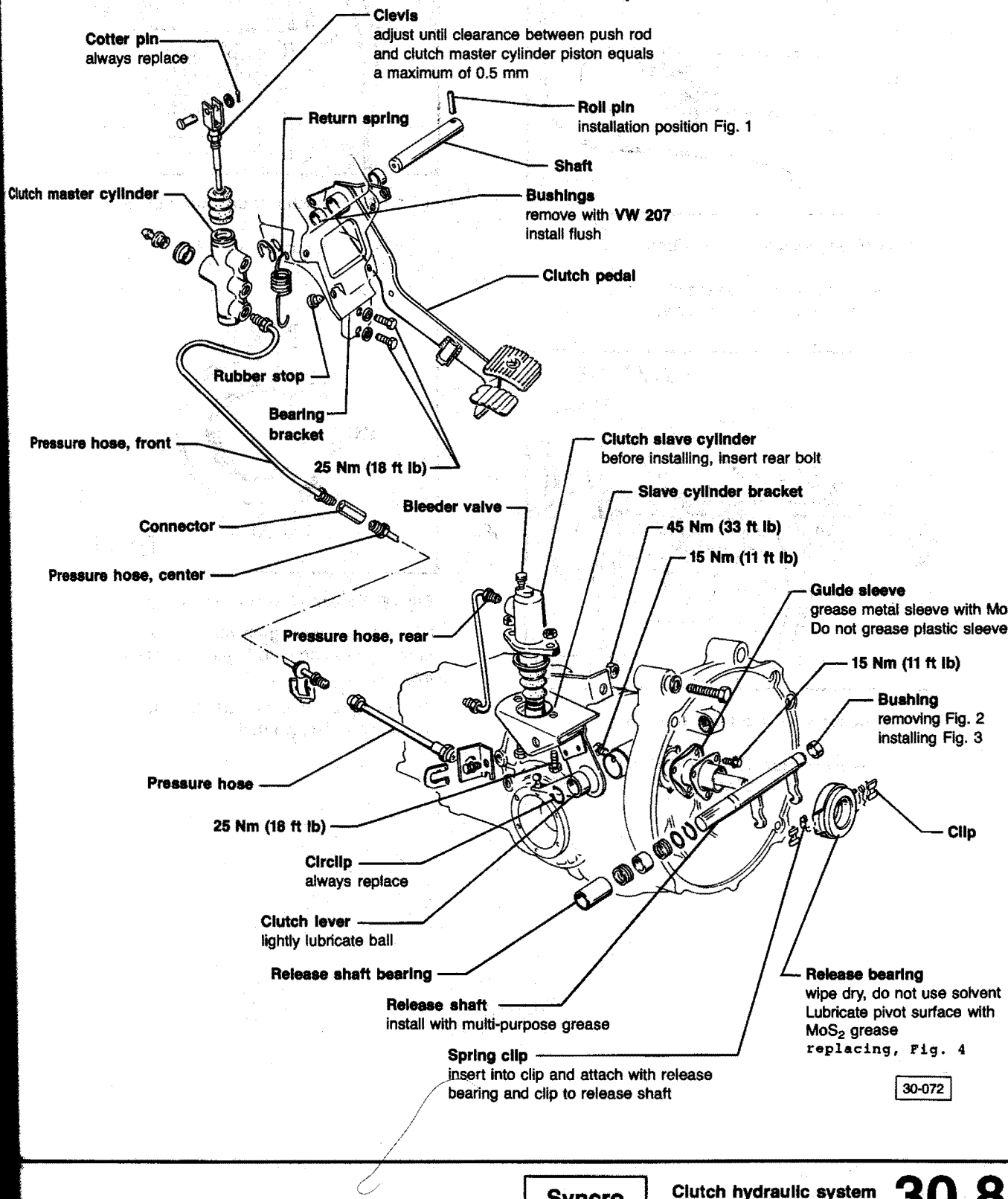

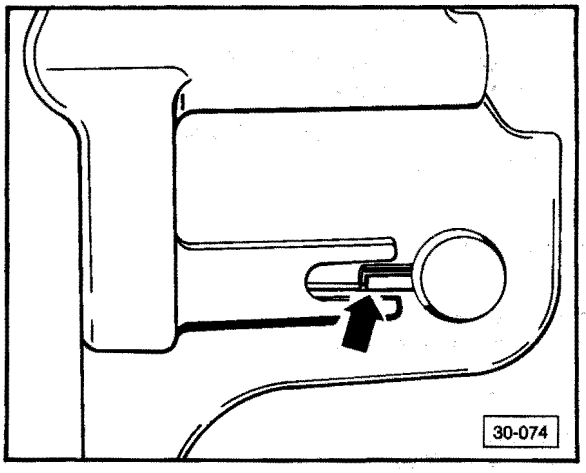

Fig. 1 Roll pin, installation position

— roll pin must be engaged in groove (**arrow**) on side of bracket

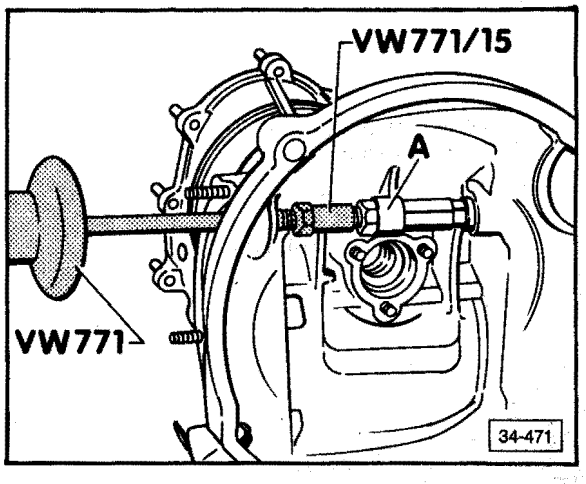

Fig. 2 Release shaft bushing, removing

A — inner extractor 18.5-23.5 mm e.g. Kukko 21/3

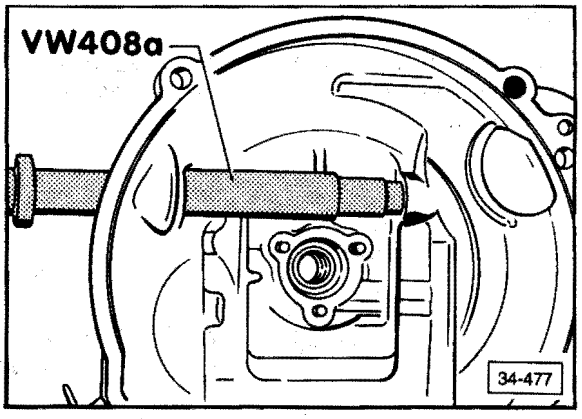

Fig. 3 Bearing shaft bushing, installing

— push bushing in to stop

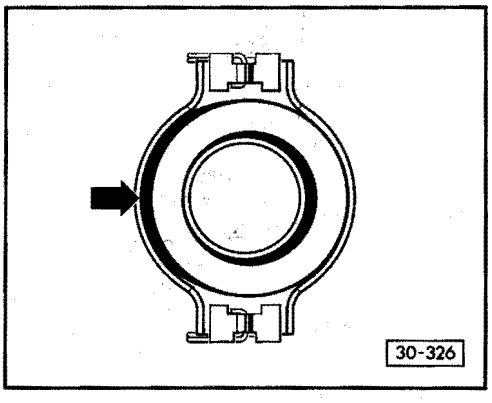

Fig. 4 Release bearing, installing

New release bearing on which thrust ring is not centrally positioned to housing (**arrow**) can be installed.

The thrust ring automatically centers itself on first application of clutch pedal.

CAUTION

Clutches with damaged or loose riveted connections should be replaced.

CAUTION

When replacing engines, transmissions or clutches, make sure the diameter and joint surfaces of release bearing and diaphragm spring match.

Note

Remove engine when working on the clutch

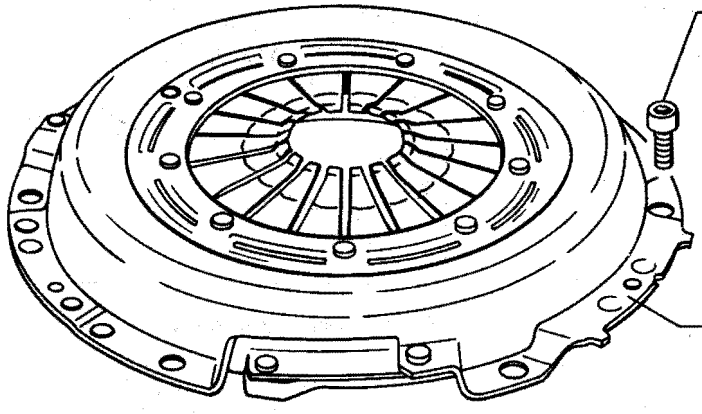

25 Nm (18 ft lb)
loosen or tighten diagonally in stages

Pressure plate
removing and installing Fig. 1
checking for wear and warping Figs. 2, 3 and 4

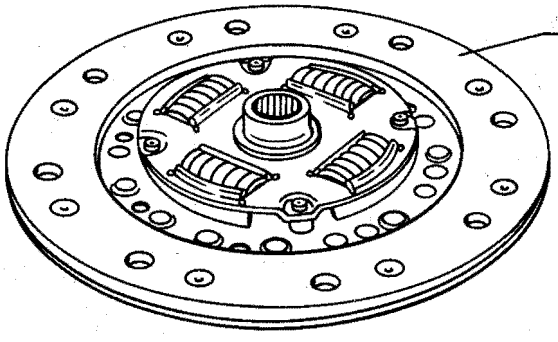

Clutch disc
centering Fig. 1
checking runout Fig. 5
Note installation position,
spring cage faces pressure plate.
When installing, clean corrosion from transmission mainshaft and clutch hub splines. Lightly grease clutch splines with grease, part no. G 000 100

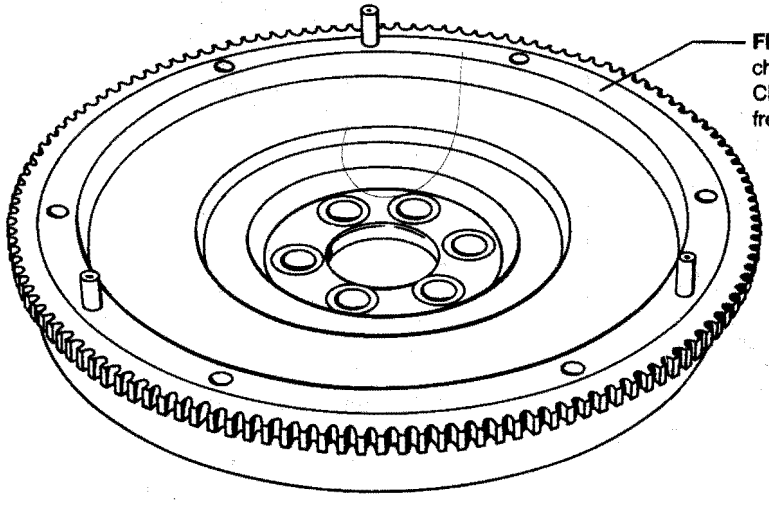

Flywheel
check that spring pin fits tightly
Clutch facing contact surface must be free of cracks, oil and grease

30-092

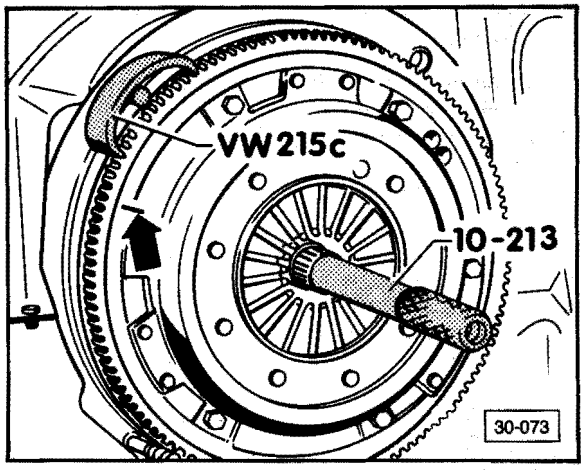

Fig. 1 Clutch removing/installing

— mark installation position (**arrow**)

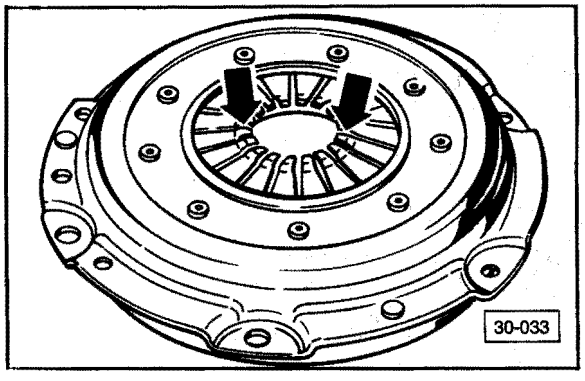

Fig. 2 Clutch diaphragm spring, checking

— examine fingers (**arrows**)
- scores up to a maximum of 0.3 mm are acceptable

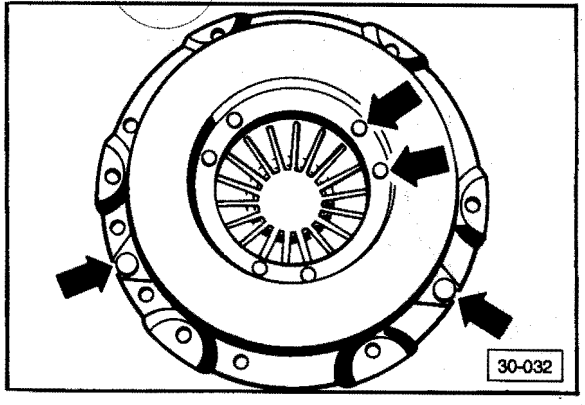

Fig. 3 Clutch, checking

— check straps between pressure plate and cover for cracks and loose rivets (**arrows**)
- clutches with damaged or loose riveted sections should be replaced

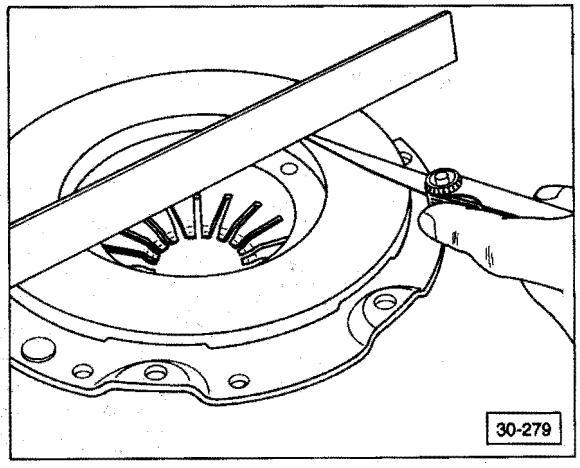

Fig. 4 Pressure plate, checking

— check pressure plate for cracks, burn marks and distortion
- maximum inward taper = 0.3 mm

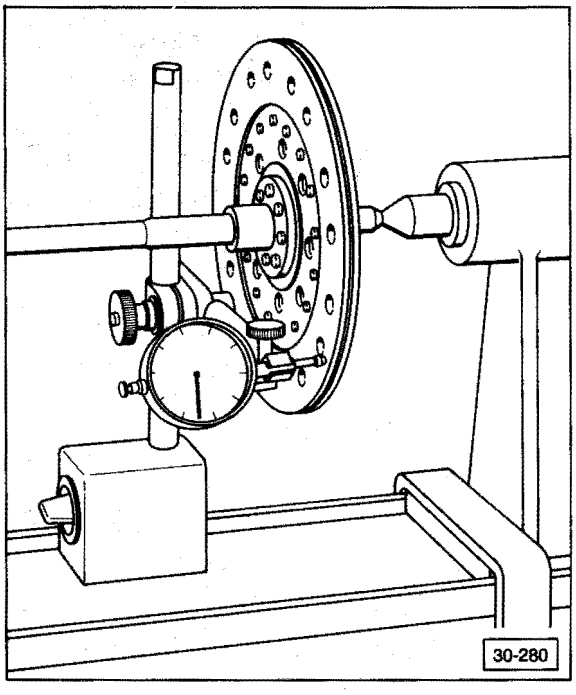

Fig. 5 Clutch disc, checking runout

- maximum runout = 0.5 mm (measure 2.5 mm from outer edge)

Torque Converter

Quick Data

Index

—Bushing 32.3
—Code letter 32.2
—Draining 32.2
—Installing 32.3
—Oil seal 32.3

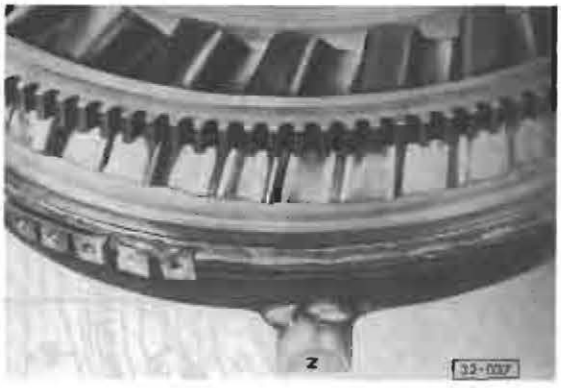

Fig. 1 Converter code letter
D–up to build date 3/27/81
Z–3/81 to 7/85
H–from 8/85
Note

Torque converter with code letter Z has a modified impeller and turbine vanes and can be installed in earlier vehicles.



Fig. 2 Torque converter, draining

– attach small inside diameter hose, about 8mm (5/16 in.) outside diameter, to plastic bottle of about 2 liter (2 qt) capacity
• hose connection and cap must be air tight
– cut free end of drain hose at an angle
– place converter in sloping position

– squeeze plastic bottle and hold while inserting free end of drain hose into converter hub
• end of hose must rest on bottom of converter
– release plastic bottle so that ATF starts draining
– loosen bottle cap so fluid can siphon



Fig. 3 Converter oil seal hub, checking

– check hub (arrow) for scoring from oil seal
– check that chamfer for oil seal is rounded at front
– cover hub bore in converter
– remove sharp edges and burrs with fine emery cloth
– do not damage surface where oil seal contacts hub

Note

Torque converter bushing can be replaced separately. If torque converter assembly is defective, replace complete unit



Fig. 4 Converter bushing, checking

- wear limit diameter 34.25 mm (1.348 in)
- out of round max. 0.03 mm (0.001 in)

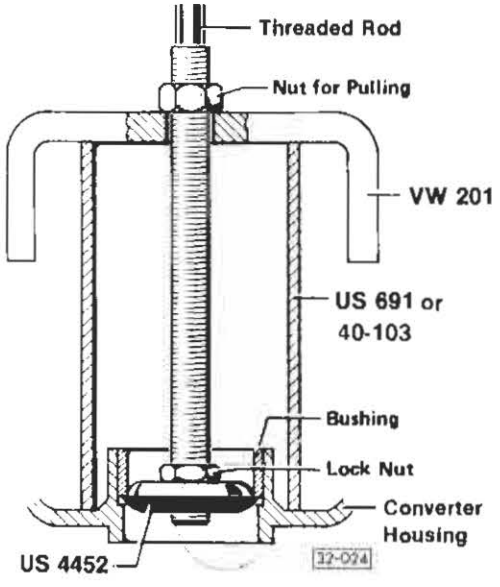

Fig. 5 Converter bushing, removing

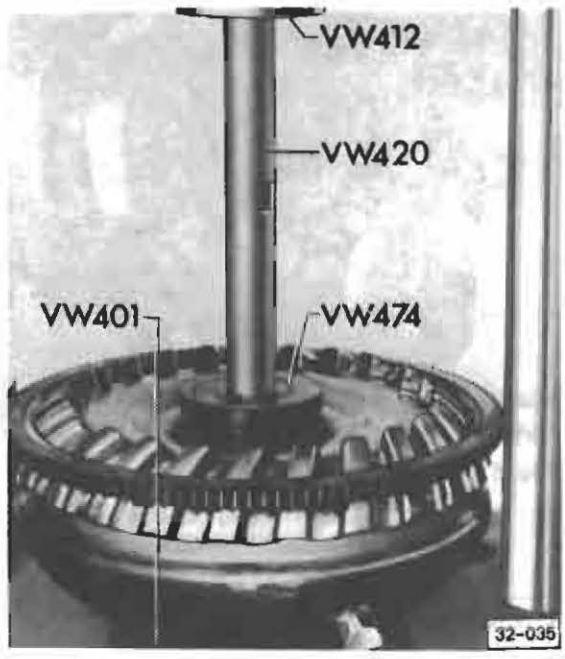

Fig. 6 Converter bushing, installing

— press bushing in until seated

CAUTION

When installed, bushing must have inside diameter of 34.03–34.05 mm (1.340–1.341 in.). If bushing is less than minimum inside diameter, it may sieze.
After installing bushing, check edge of converter hub for burrs

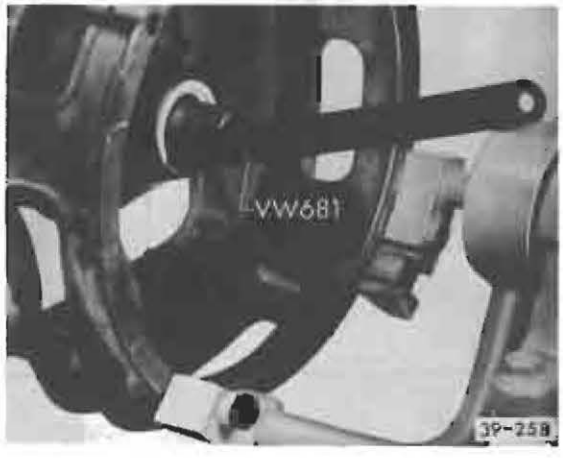

Fig. 7 Converter oil seal, removing

— pry damaged seal out, carefully clean seat for seal



Fig. 8 Converter oil seal, installing

— dip seal in ATF and drive in as far as it will go

CAUTION

Be careful when installing silicone seal. Seal is soft and can be easily damaged. Silicone seals must not contact gasoline or similar cleaning solutions

Converter assembly, installing

- before installing converter, pump shaft must be inserted fully into pump splines

— place converter carefully on one-way clutch support

- do not tilt or misalign converter

— engage splines by turning converter back and forth

Manual Transmission Controls, Assembly

Index

091
— Drive flange oil seal 34.18
— Gearshift
adjusting 34.4
assembly 34.3
bearing plate 34.4
linkage 34.2
— Transmission
removing 34.14

091/1
— Drive flange oil seal 34.18
— Gear ratios 34.9
— Gearshift
adjusting 34.8
assembly 34.6
bearings 34.6
linkage 34.6
— Lubricant
specifications 34.9
— Shift rod
mounting 34.7a
— Technical data
chart 34.1a

094
— Drive flange oil seal 34.18
— Gearshift
adjusting 34.12
assembly 34.10
— Technical data chart 34.1b
— Transmission
removing/installing 34.16

094-4WD Syncro
— Differential
lock components 34.24
lock control, repairing 34.26
lock servo, removing 34.25
— Gearshift linkage
adjusting 34.21
assembly 34.20
— Technical data chart 34.19
— Transmission
removing/installing 34.22

Technical data

- code letters
- application
- gear ratios

Transmission code letters	ACW
date of manufacture from	01/86
to	
type	091/1
Application to engine	2.1 liter, Digifant, 70 Kw (95 bhp)
Gear ratios final drive	29:6 – 4.83
1st gear	34:9 – 3.78
2nd gear	33:16 – 2.06
3rd gear	49:40 – 1.23
4th gear	41:48 – 0.85
reverse gear	33:9 – 3.67
Lubrication capacity	3.0 liter (3.2 U.S. qt)[1]
specification	hypoid API GL-4, Mil-L-2105, SAE 80W, 80W/90
Clutch actuation	hydraulic
disc diameter	228 mm
drive flange diameter	100 mm
speed in 4th gear per 1000 rpm	29 Kph (18 mph)

1 refill capacity only; 1.5 liters cannot be drained

Technical data

- code letters
- application
- gear ratios

Code letters		DX
Production	from	10/82
	to	11/83
Application	type	Vanagon
	engine	1.6L Diesel 37 kW (48 bhp)
Ratios	final drive	38:7 = 5.428
	1st gear	37:9 = 4.111
	2nd gear	35:15 = 2.333
	3rd gear	31:21 = 1.476
	4th gear	57:56 = 1.018
	5th gear	49:64 = 0.765
	reverse gear	33:9 = 3.666
Lubricant capacity		4.0 Liters (4.2 US qt)
Specification		hypoid GL-4, MIL-L 2105, SAE 80 or G50 synthetic oil
Clutch actuation		hydraulic
Clutch disc diameter		215 mm
Axle shaft flange diameter		100 mm

Note

All connections must engage easily without jamming. Lubricate all joints and friction surfaces with MoS_2 grease (part no. G 000 602). Linkages already lubricated with white grease or solid lubricant must first be cleaned thoroughly.

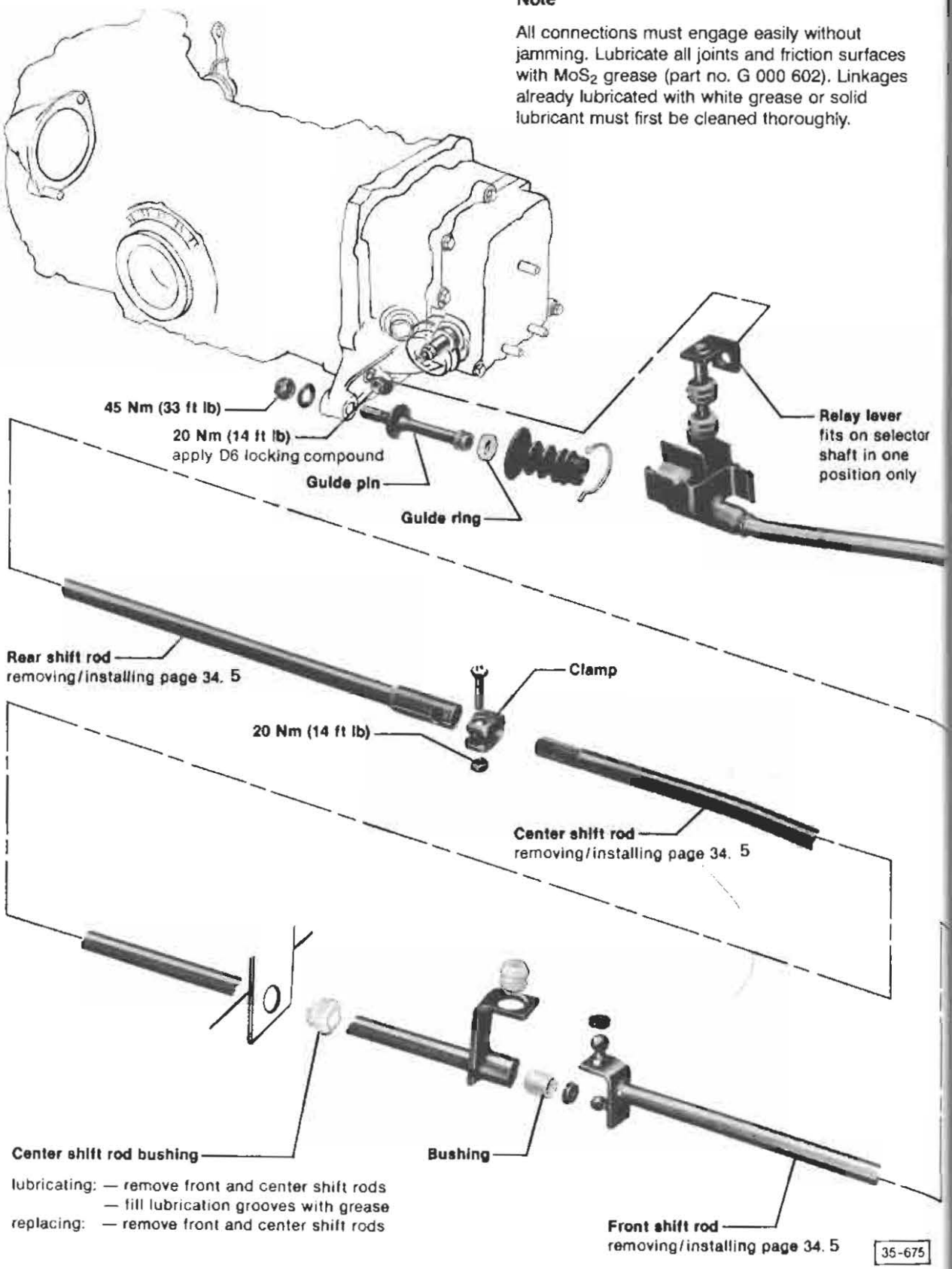

lubricating: — remove front and center shift rods
— fill lubrication grooves with grease
replacing: — remove front and center shift rods

Note

Lubricate all joints and friction surfaces with MoS_2 grease (part no. G 000 602). Linkages already lubricated with white grease or solid lubricant must first be cleaned thoroughly.

CAUTION

Apply grease to shifter components inside the vehicle with great care. MoS_2 grease cannot be removed from upholstery or carpets.

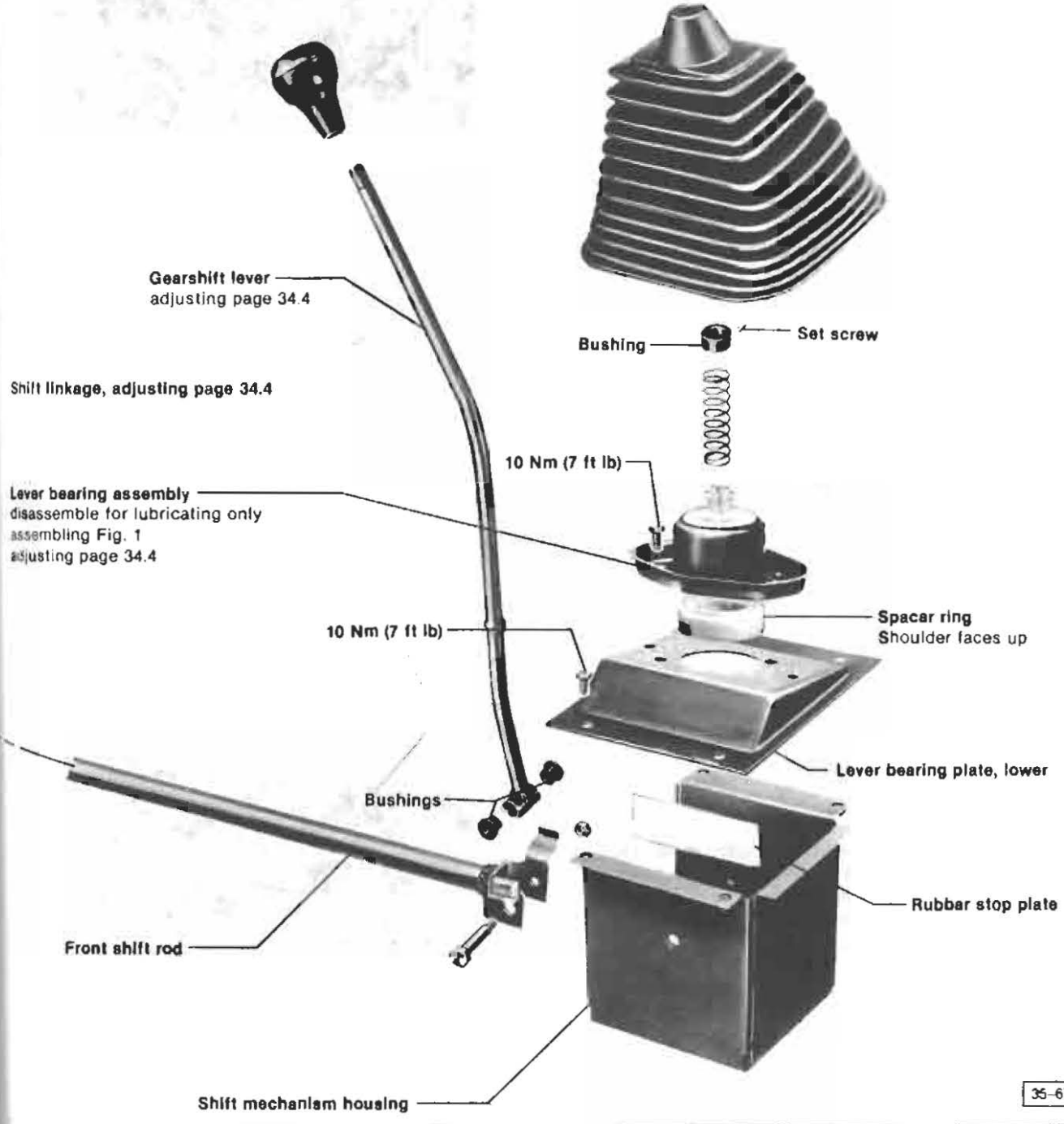

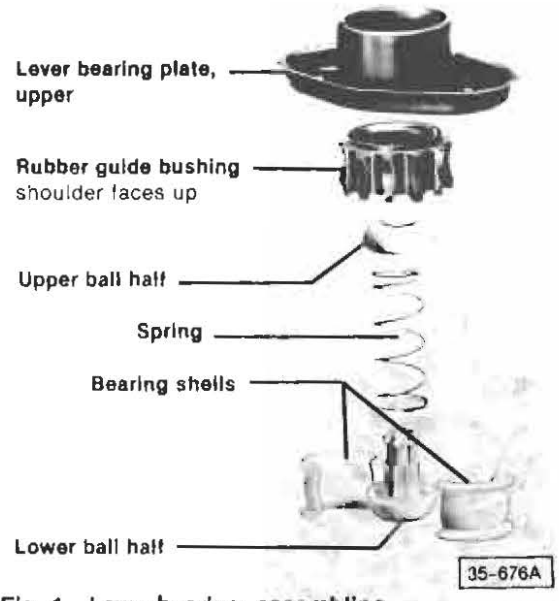

Fig. 1 Lever bearing, assembling

- push both bearing shells into rubber guide bushing
- press lower ball half into shells from bottom (shouldered side of bearing is top)
- insert spring on lower ball half
- pushing shells apart, push in upper ball half
- push rubber guide bushing into upper lever bearing plate (shouldered side first)
- install spacer ring into bottom of upper lever bearing plate with shoulder facing rubber guide bushing

Shift linkage, adjusting

Work sequence

- place shift lever in neutral position

Note

A revised shift lever bearing is installed in vehicles beginning 06-88. In the revised bearing the bearing plate alignment holes are deleted. The revised shift lever bearing can be installed in vehicles manufactured from 10-82 to 06-88.

With alignment holes (up to 06-88)

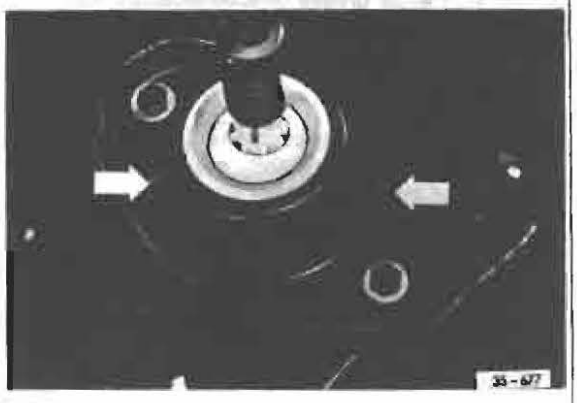

- align holes (arrows) of upper bearing plate with holes of lower bearing plate

Without alignment holes (beginning 06-88)

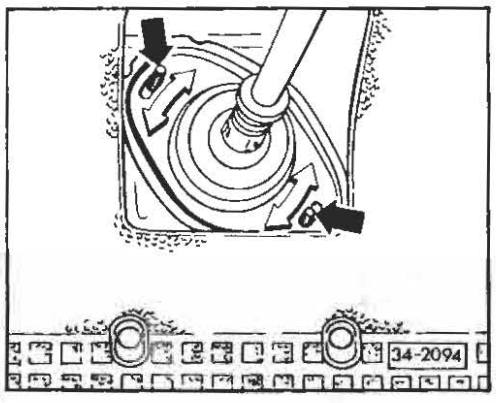

- rotate upper bearing plate so that the mounting studs (black arrows) contact opposite sides of the bearing plate
- tighten mounting nut to 10 Nm (7 ft. lb.)



- loosen shift rod clamp so selector lever can move easily on shift rod
- remove spare tire
- move stop finger of front shift rod to center of rubber stop in housing

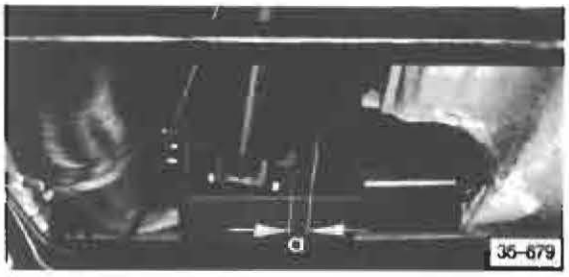

– adjust shift rod end
  - up to Chassis No. 25 BH 137 155
    a = 19 mm (3/4 in.)
  - from Chassis No. BH 25 137 156
    a = 22 mm (7/8 in.)
    (to measure use locally fabricated sheet metal strip)
– tighten shift rod clamp
– shift through all gears and check that they engage easily without jamming
– check reverse lock-out for proper operation

Note

From Chassis No. BH 25 137 156 a new type mechanism housing has been installed.
If 1st gear is jamming on vehicles up to Chassis No. BH 137 155 – even after correct adjustment is made – install new type shift mechanism housing and adjust distance a to 22 mm (7/8 in.)

Front and center shift rods, removing/installing

Work sequence

— loosen clamp
— remove spare tire
— remove bolt holding shift lever to front shift rod
— pull off front and center shift rods in forward direction
— when installing, assemble both shift rods and insert into center shift rod bushing located above fuel tank

Rear shift rod, removing/installing

Work sequence

— loosen clamp
— remove rear shift rod retaining bolt from transmission housing and push bolt into shift rod
— pull off rear shift rod
— install in reverse sequence

Note

Lubricate all joints and moving parts with grease (part no. G 000 602) before installing. Linkages already lubricated with white grease or solid lubricant must be cleaned thoroughly before applying moly grease.

Transmission, removing/installing

see pages 34.16 and 34.17

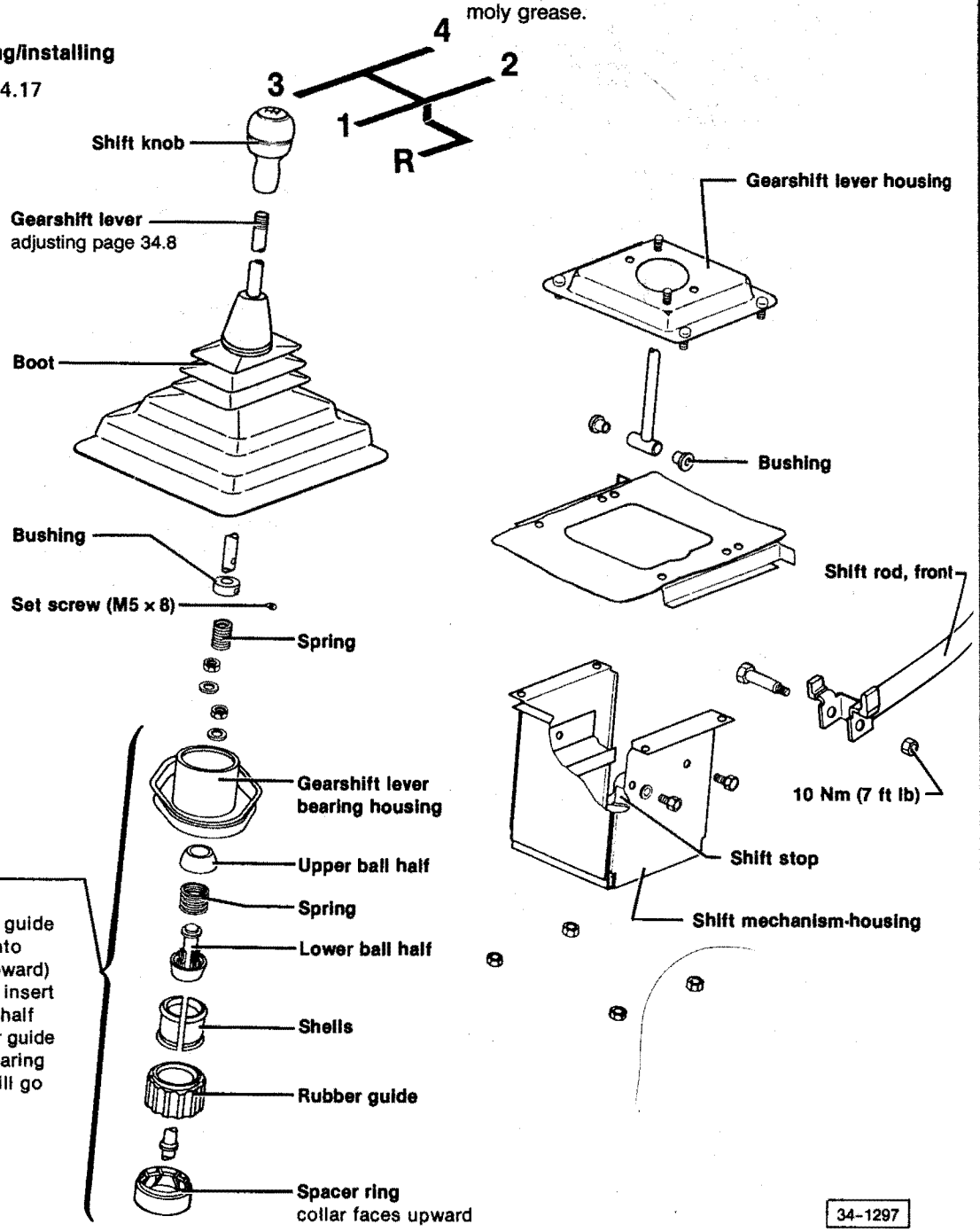

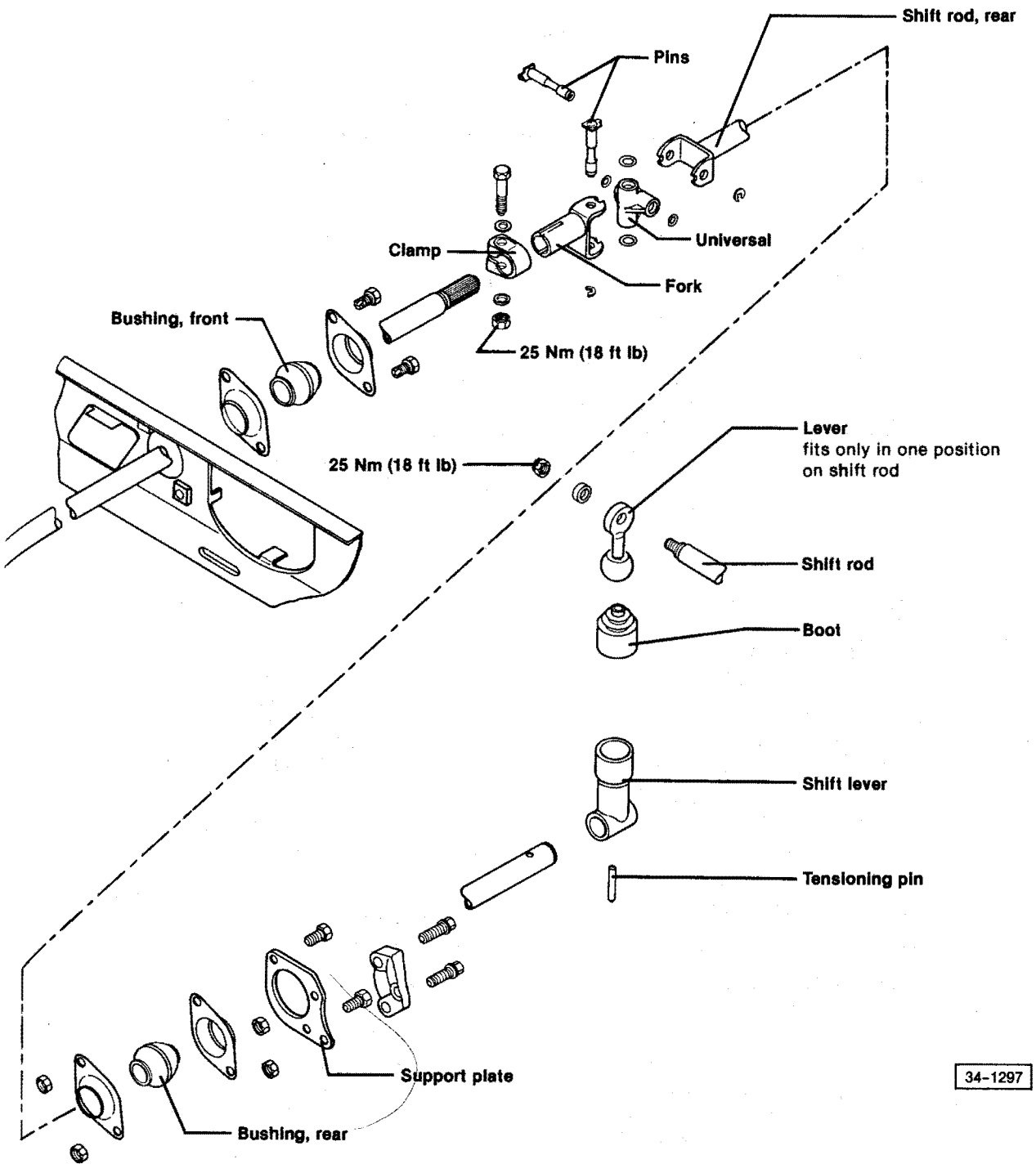
Shift rod, rear
Pins
Universal
Clamp
Fork
Bushing, front
25 Nm (18 ft lb)
25 Nm (18 ft lb)
Lever
fits only in one position
on shift rod
Shift rod
Boot
Shift lever
Tensioning pin
Support plate
Bushing, rear
34-1297

Beginning in June 1987 a boot is installed on each side of the shift rod bushing.

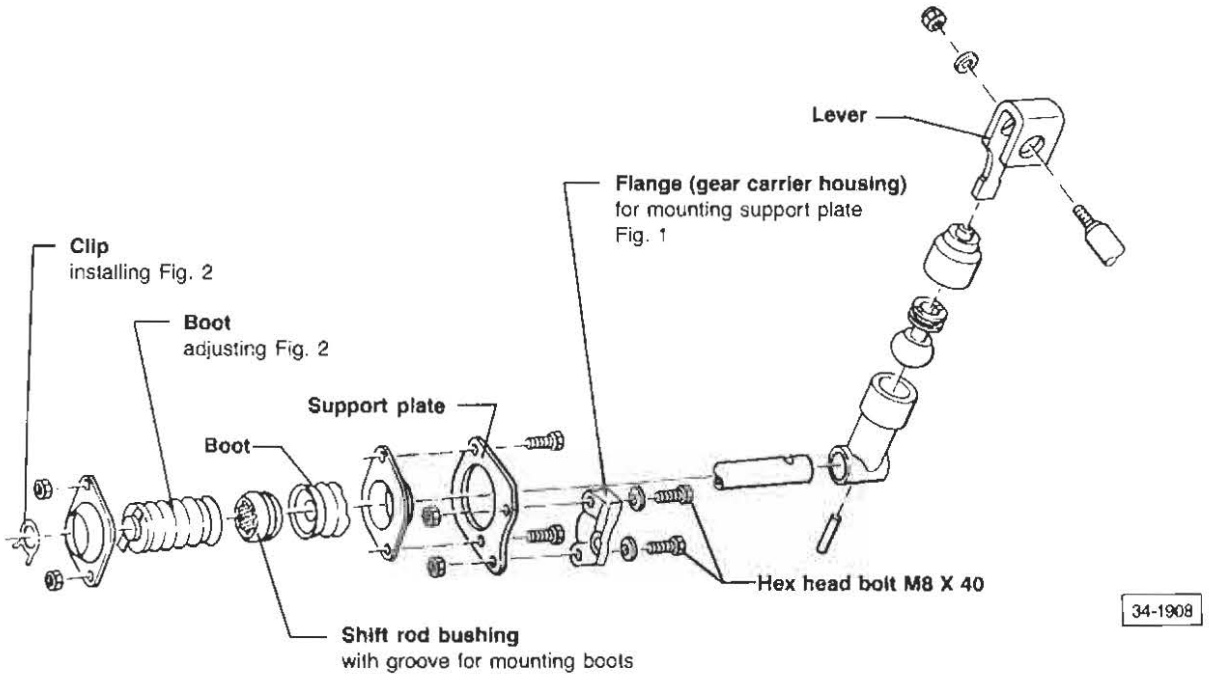

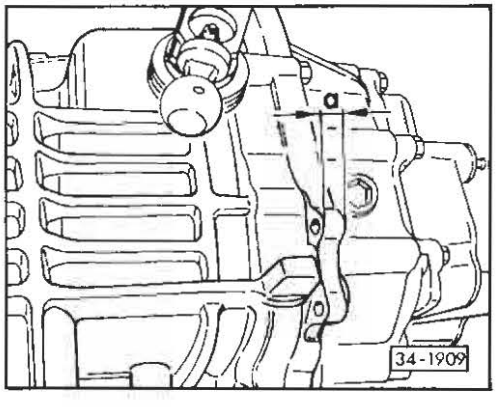

Fig. 1 Flange on gear carrier housing, dimensions

a = 14.5 mm (previous version)
a = 21.0 mm (revised version)

Note

The shift rod bushing is positioned 6.5 mm further forward on the revised flange. This prevents the rear boot from being compressed too far causing a shift out of gear.

During repairs, a gear carrier housing can be replaced with the revised housing on transmissions from 10/82 on.

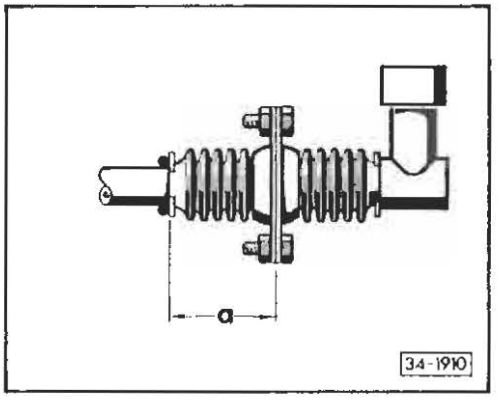

Fig. 2 Front boot, adjusting

a = 60.0 mm (in neutral position)

Note

The revised shift rod mounting can be installed with the previous gear carrier housing. Insert a nut, M8 x 6.5, Part No. **N 011 008 18**, between flange and support plate. Use M8 x 40 bolt, Part No. **N 010 340 4**.

Gearshift lever, adjusting

Note

A revised shift lever bearing is installed in vehicles beginning 06-88. In the revised bearing the bearing plate alignment holes are deleted. The revised shift lever bearing can be installed in vehicles manufactured from 10-82 to 06-88.

Work sequence

– shift into neutral position

With alignment holes (up to 06-88)

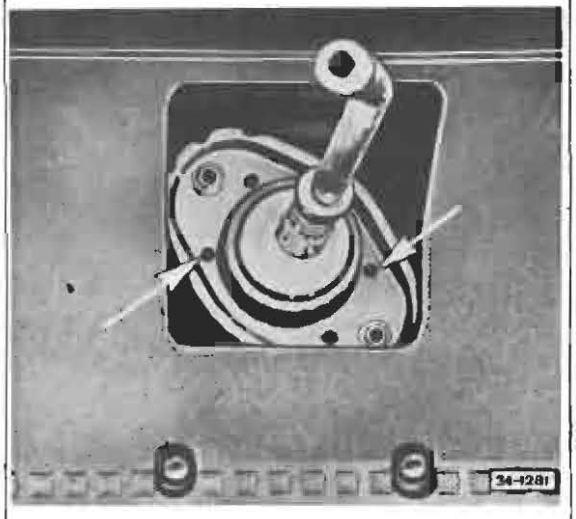

– align centering holes (arrows) of gearshift lever housing and gearshift lever bearing housing

Without alignment holes (beginning 06-88)

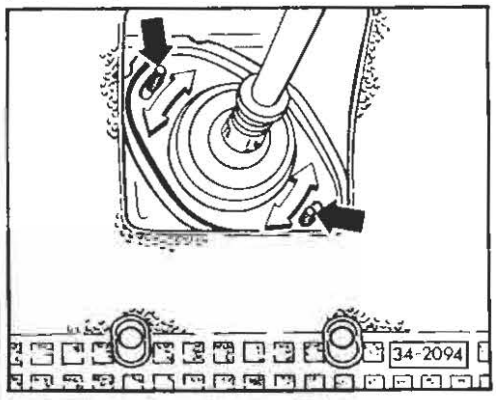

– rotate upper bearing plate so that the mounting studs (black arrows) contact opposite sides of the bearing plate slots
– tighten mounting nuts to 10 Nm (7 ft. lb.)

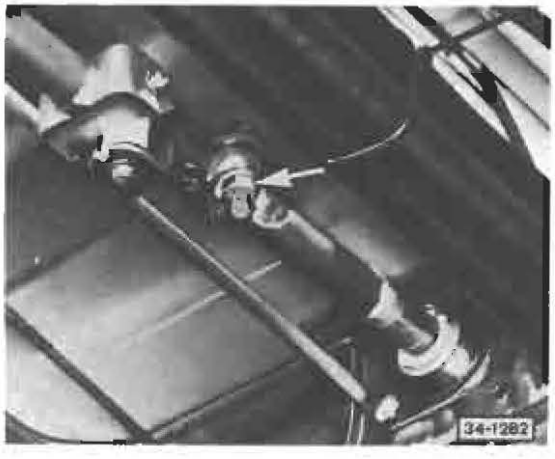

— loosen clamp nut (arrow)
— check that joints of shift rods slide freely
— remove spare wheel

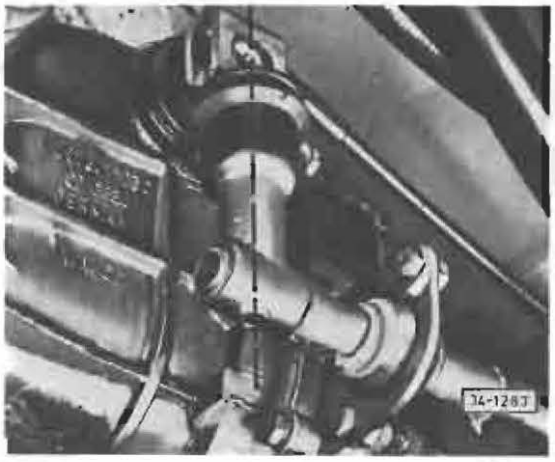

— set lever on transmission in vertical position, as shown



— move stop finger of front shift rod to center of shift mechanism housing
— adjust shift rod end
  • **a** = 23 mm (29/32 in.)
  (use strip of sheet metal to measure)

CAUTION

Transmission must be in neutral, lever on transmission in vertical position

— tighten shift rod clamp
— shift through all gears and check that they engage easily without jamming
— check reverse lock-out for proper operation

Note

Check that with 1st gear engaged, distance between shift lever and heater pipe insulation is min. 15 mm (19/32 in.)

4-speed manual transmission 091/1

(1985 MY Vanagons)

Gear Ratios	Trans. DU		
1st gear	34:9	=	3.78
2nd gear	33:16	=	2.06
3rd gear	63:50	=	1.26
4th gear	52:61	=	0 85
Reverse	33:9	=	3.67
Final drive	34:7	=	4.86

Gear Ratios	Trans. ABD		
1st gear	34:9	=	3.78
2nd gear	33:16	=	2.06
3rd gear	49:40	=	1.225
4th gear	41:48	=	0.85
Reverse	33:9	=	3.67
Final drive	29:6	=	4.83

Lubricant specifications

lubricant capacity (incl. differential)
091/l . . . . . 3.0 l (3.2 US qt)
viscosity . . . . SAE 80W, SAE 80W/90
type . . hypoid, MIL-L-2105; API/GL-4

Note

Lubricate all joints and moving parts with grease (part no. G 000 602) before installing. Linkage already lubricated with white grease or solid lubricant must first be cleaned thoroughly.

CAUTION

Apply grease to shifter components inside the vehicle with great care. MoS_2 grease cannot be removed from upholstery or carpets.

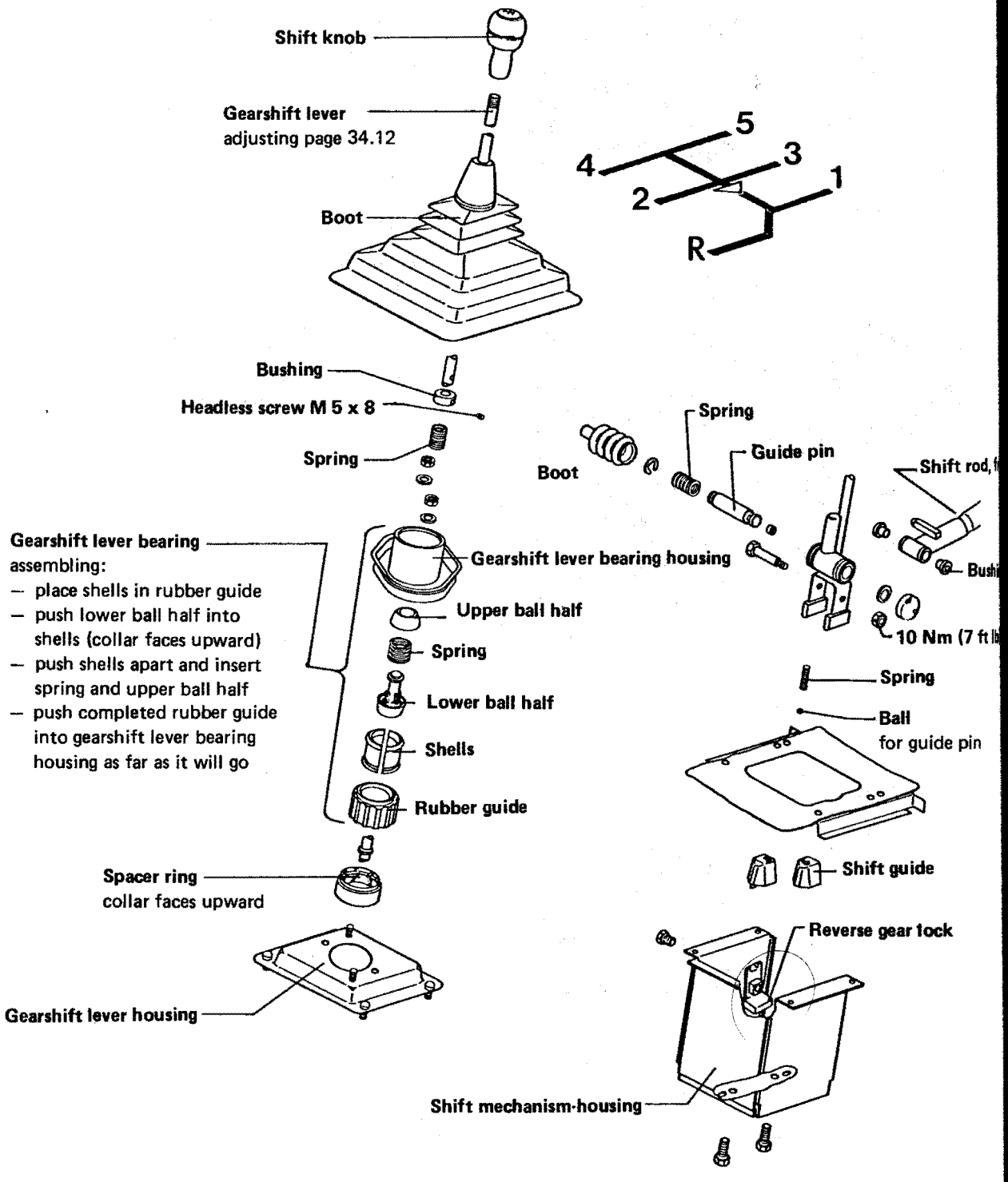

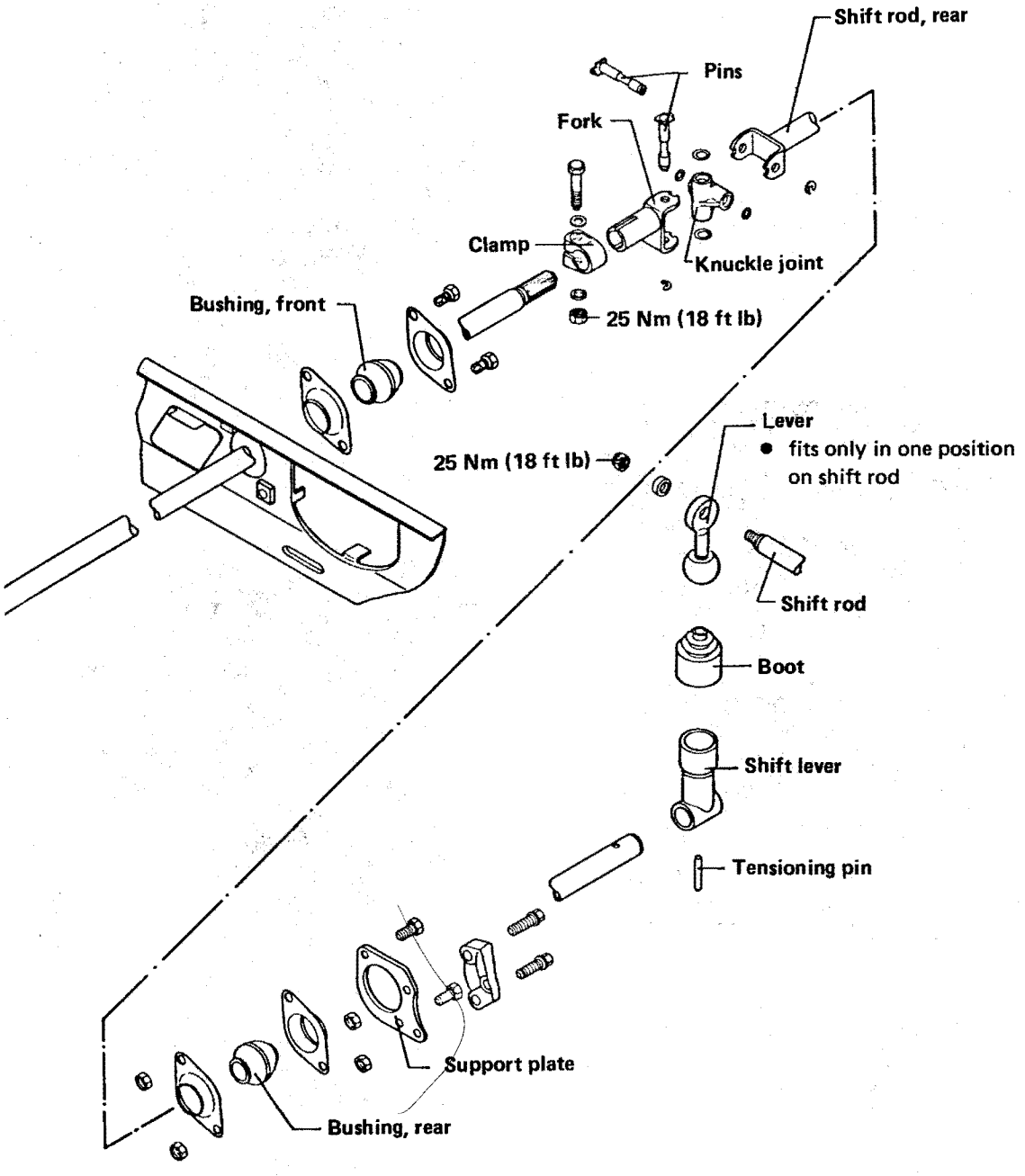
Shift rod, rear
Pins
Fork
Clamp
Knuckle joint
Bushing, front
25 Nm (18 ft lb)
25 Nm (18 ft lb)
Lever
• fits only in one position on shift rod
Shift rod
Boot
Shift lever
Tensioning pin
Support plate
Bushing, rear

34–1280

Gearshift lever, adjusting

Work sequence

– shift into neutral position

Note

A revised shift lever bearing is installed in vehicles beginning 06-88. In the revised bearing the bearing plate alignment holes are deleted. The revised shift lever bearing can be installed in vehicles manufactured from 10-82 to 6-88.

With alignment holes (up to 06-88)

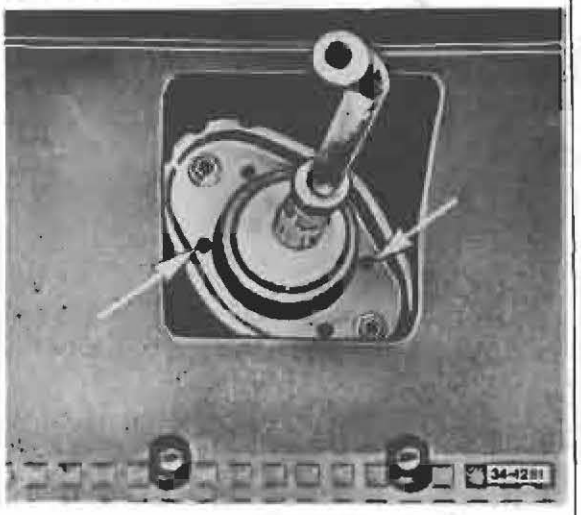

– align centering holes (arrows) of gearshift lever housing and gearshift lever bearing housing

Without alignment holes (beginning 06-88)

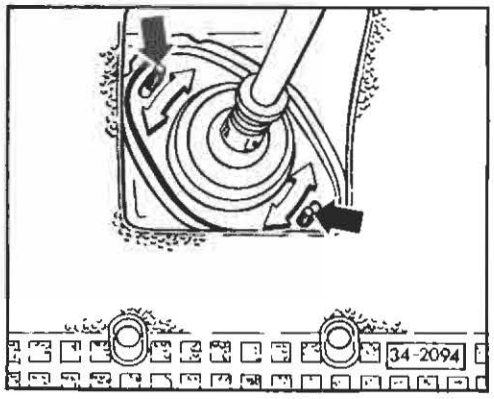

– rotate upper bearing plate so that the mounting studs (black arrows) contact opposite sides of the bearing plate
– tighten mounting nuts to 10 Nm (7 ft. lb.)

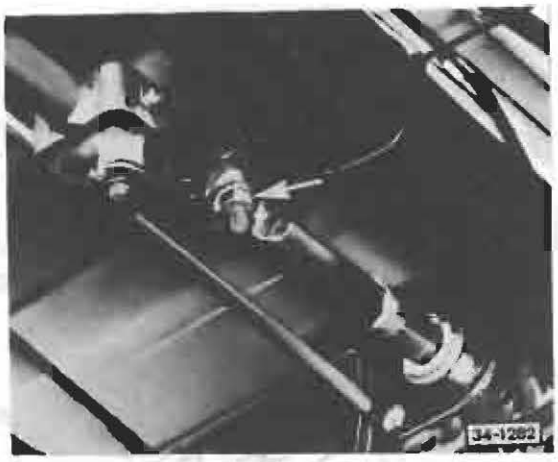

– loosen clamp nut (arrow)
– check that joints of shift rods slide freely
– remove spare wheel

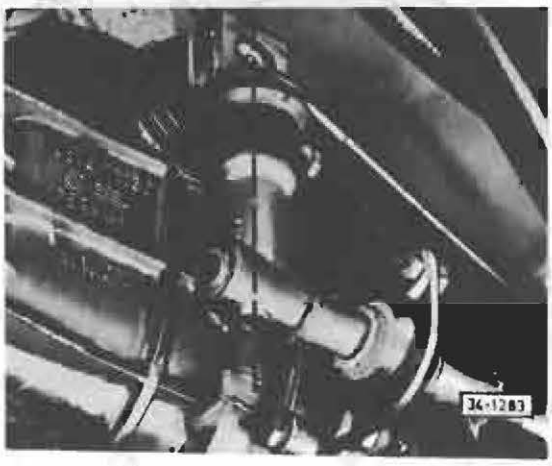

– set lever on transmission in vertical position, as shown
– push shift rod into transmission until spring tension is felt; keep shift rod in this position (shift position 2/3 gear)



– push shift rod to right (shift position for 1st/ reverse gear) and move in longitudinal direction
  - so that measurement a between reverse gear lock and stop of shift rod is **3mm (0.118 in.)**

Note
Use 90° sheet metal angle piece of 3mm (0.118 in.) thickness

CAUTION
Transmission must be in neutral, lever on transmission in vertical position

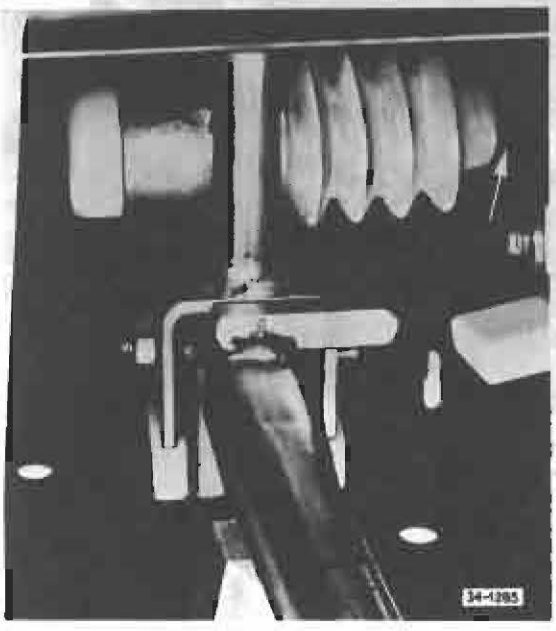

– let shift rod spring back to left into 2nd/3rd gear shift position and push rod slightly to right
  - boot must touch inside of shift mechanism housing (arrow)

CAUTION
Transmission must be in neutral, lever on transmission in vertical position

– tighten clamp nut in this position to 25 Nm (18 ft lb)

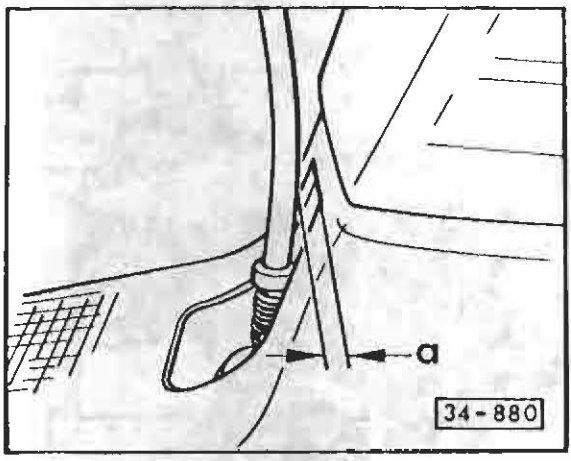

– with 2nd gear engaged, check distance between gear shift lever and heater covering
  - measurement a must be at minimum 15 mm (5/8 in.). If not, adjust gearshift lever bearing by pushing backward in slotted holes
– check that all gears engage easily without jamming. Particularly, check reverse gear lock out

Transmission, removing
(engine installed)

Work sequence

— disconnect battery ground strap
— remove right side upper engine/transmission bolt

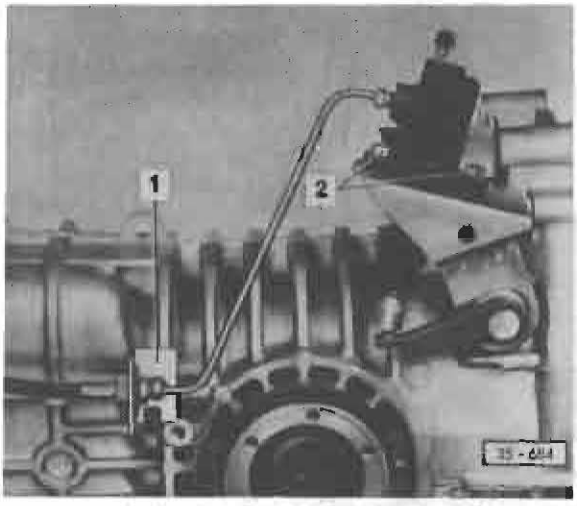

— remove hydraulic clutch line bracket **1** from transmission
  • do not disconnect hydraulic line
— remove clutch slave cylinder from bracket **2** and hang up cylinder with wire

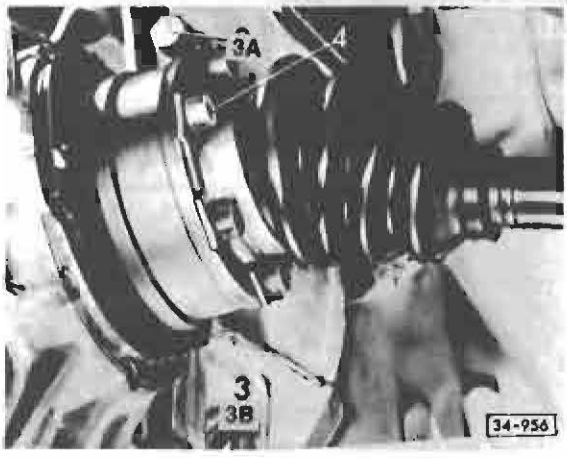

— remove left side upper engine/transmission bolt **3A**
— remove left side lower engine/transmission nut **3B**
— remove left side drive shaft bolts **4**
— remove shaft from transmission
— hang shaft up with wire



— disconnect starter cables **5**
— remove right side drive shaft bolts **6** and remove shaft from transmission
— hang shaft up with wire
— remove right side lower engine/transmission nut **7**

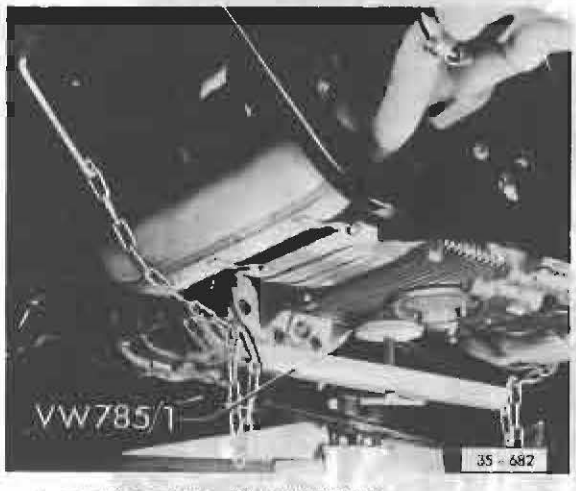

— support engine with VW 785/1
— go to next page



— disconnect back-up light wiring **8**
— remove shift linkage **9** from transmission
— disconnect ground strap **10**

— remove front transmission mount **11** from body
  • support transmission with US 618 together with US 618/5
— lower front part of transmission (loosen spindle of VW 785/1) until there is enough room to remove transmission
— separate transmission from engine and remove from vehicle

Transmission, installing
(engine installed)

Work sequence

Proceed in reverse order of removing and note following:

— install transmission with US 618 together with US 618/5
— clean splines of mainshaft and lubricate lightly with MoS_2
— note correct position of air deflector plates to body
— check engine compartment seals
— tighten front transmission mounts

Tightening torques:

• transmission to engine bolts/nuts	30 Nm (22 ft lb)
• drive shafts to transmission	45 Nm (33 ft lb)

Transmission, removing
(engine installed)

Work sequence

— disconnect battery ground strap
— remove upper engine/transmission bolt
— remove bracket for accelerator cable

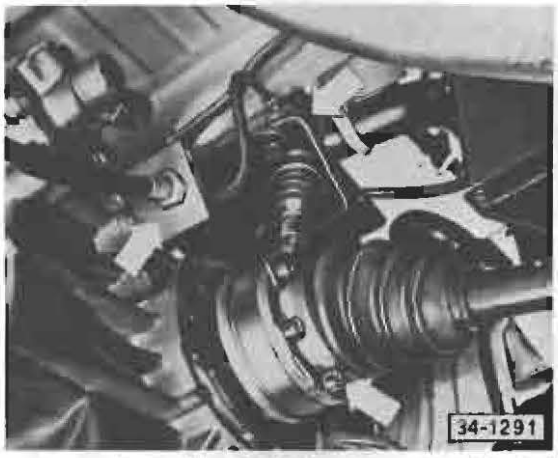

— remove left drive shaft from transmission and hang up with wire
— remove clutch cable bracket from transmission
— remove clutch slave cylinder from bracket and hang up with wire

Note

Hydraulic system must be closed

— disconnect backup light wiring

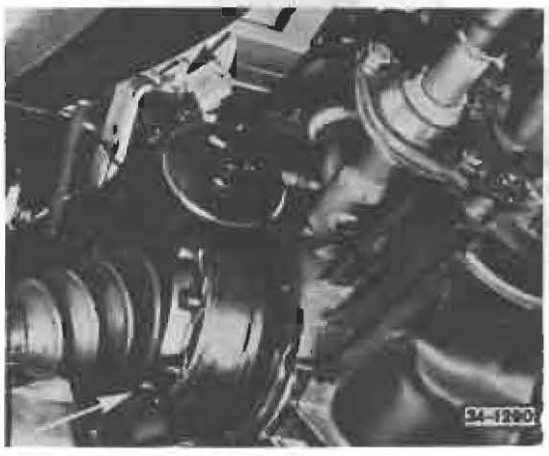

— disconnect starter wiring and remove starter complete

— remove right drive shaft from transmission and hang up with wire



— support engine with VW 785/1B
— remove rubber plugs from left wheel housing to hook in chain



— remove shift rod from transmission (arrows)
— support transmission with suitable tool

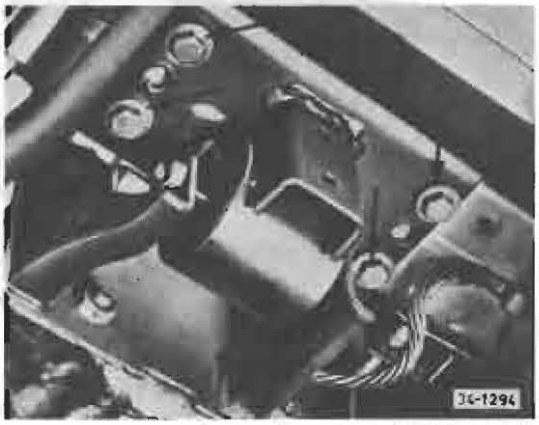

— remove ground strap from body (right arrow)
— remove front transmission mount from body (arrows)

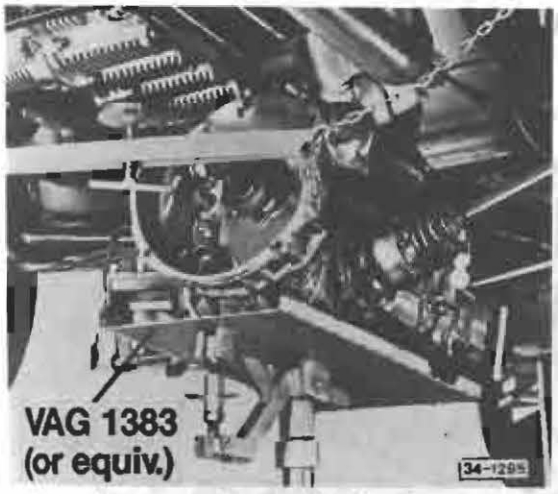

– lower front part of transmission (loosen spindle of VW 785/1) until there is enough room to remove transmission
– remove lower engine/transmission bolts
– pull transmission off engine guide bolts and remove from vehicle

Transmission, installing
(engine installed)

Proceed in reverse order of removing and note following:

– clean splines of mainshaft and lubricate lightly with MoS_2 grease
– finally tighten front transmission mounts

Tightening torques:

- transmission to engine (M 10) 30 Nm (22 ft lb)
- drive shafts to transmission 45 Nm (33 ft lb)

Drive flange oil seal, removing
(Transmission installed)

Note

A light film of oil on seal prevents seal lips from running dry.
Replacement of seal is necessary only if there is a large amount of oil on seal and transmission housing

Work sequence

— remove drive shaft bolts from transmission and detach shaft upward
  • hang up shaft with wire
— pierce cap in flange with screwdriver and pry out

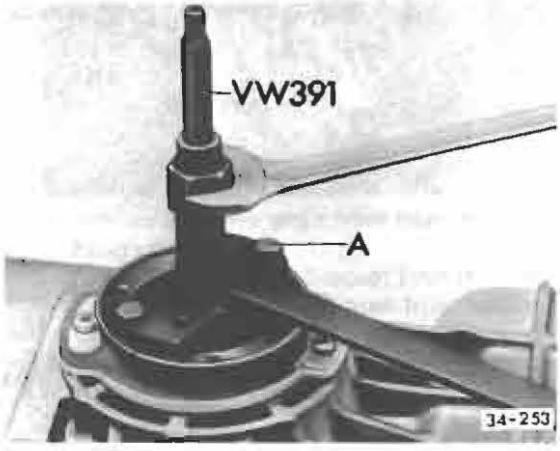

— remove circlip and pull out flange
— insert two bolts **A** (M 8 × 30) through slots in flange
— pull off flange with tool VW396

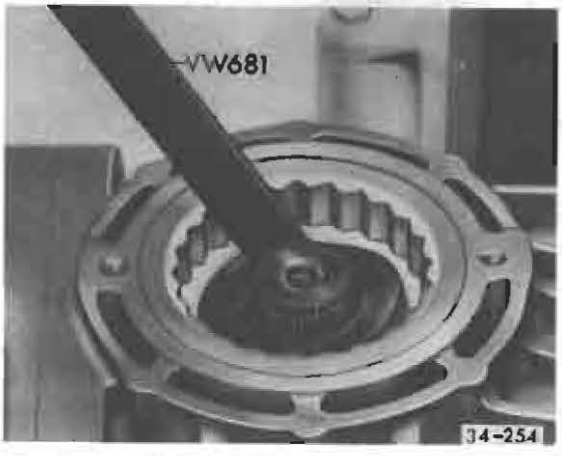

— pry out seal with tool VW681

Drive flange oil seal, installing
(Transmission installed)

Work sequence

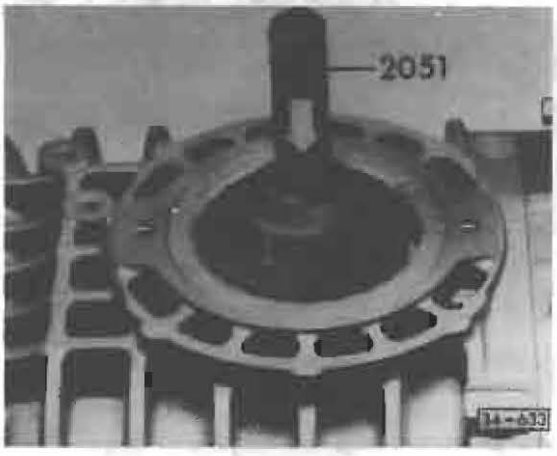

— drive in new seal until it contacts bearing race
— fill lips of seal with multi-purpose grease

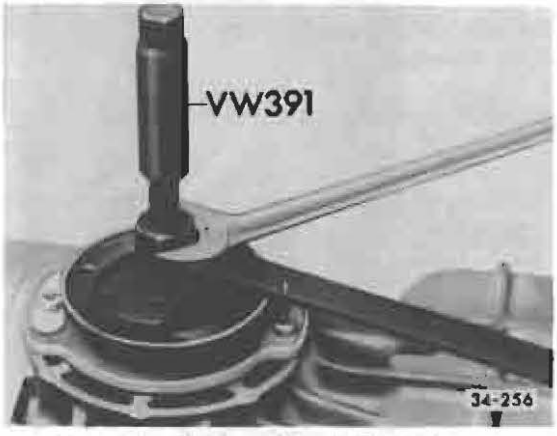

— install drive flange with tool VW391
— insert wavy spacer washer and circlip
— press circlip into groove with VW 244 b and at same time check that washer is centered

— press in new cap
— install drive shaft and tighten socket head bolts to 45 Nm (33 ft lb)
— check transmission oil level and add if necessary

Technical data

- code letters
- application
- gear ratios

Transmission code letters	AAK	AAN
date of manufacture from	10/85	10/85
to		
Application vehicle	Vanagon Syncro	
engine	2.1 Liter 95 bhp (net) SAE	
Gear ratios		
1st gear	34 : 9 = 3.78	
2nd gear	33 : 16 = 2.06	
3rd gear	49 : 40 = 1.225	
4th gear	41 : 48 = 0.85	
Low gear	31 : 9 x 28 : 16 = 6.03	
Reverse gear	31 : 9 x 28 : 16 = 6.03	
Final drive ratio	38 : 7 = 5.43	
Capacity	4.7 US qt (4.5 Liters)[1]	
Lubricant specification	Gear oil GL-4 SAE 80	
Clutch mechanism	hydraulic	
Clutch disc diameter	228 mm	
Driveshaft flange diameter	100 mm	
Overall ratio in 4th gear	4.15	
Speed in 4th gear per 1000 rpm	18 mph (29 km/h)	

1—When refilling only add 3.2 US qt (3.0 ltr) or fill to edge of filler hole as 1.5 quarts (liters) cannot be drained off.

Note

Lubricate all joints and moving parts with MoS_2 grease (part no. G 000 602) before installing. Linkages already lubricated with white grease or solid lubricant must first be cleaned thoroughly.

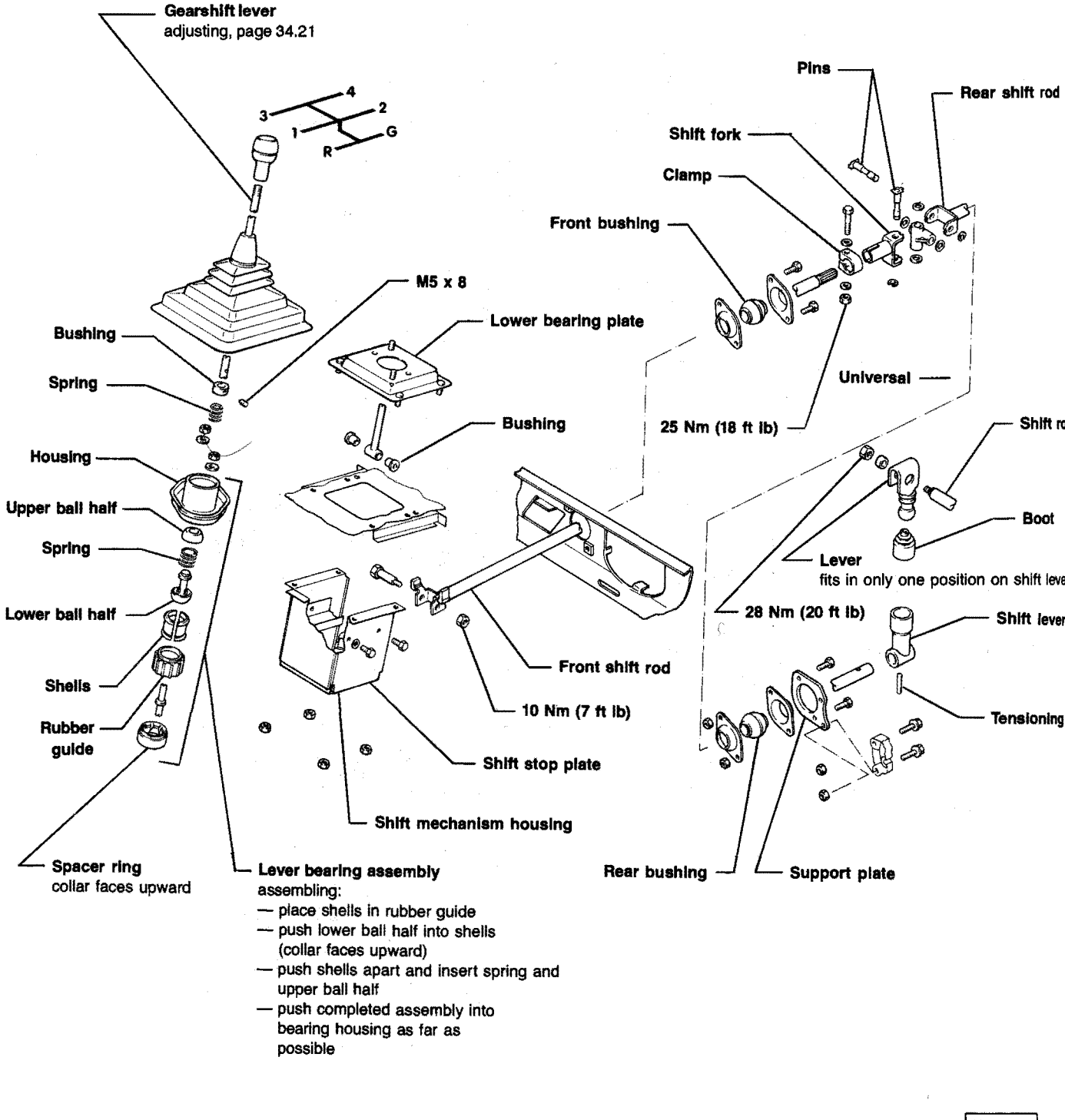

U34-1785

Shift linkage, adjusting

– place shift lever in neutral

Note

A revised shift lever bearing is installed in vehicles beginning 06-88. In the revised bearing the bearing plate alignment holes are deleted. The revised shift lever bearing can be installed in vehicles manufactured from 10-82 to 06-88.

With alignment holes (up to 06-88)

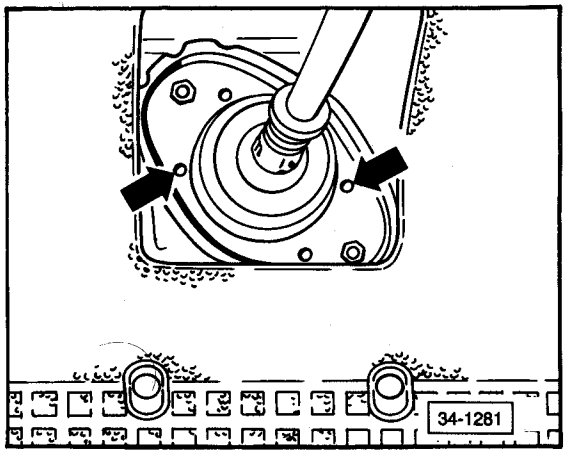

– align holes (**arrows**) of upper bearing plate with holes of lower bearing plate

Without alignment holes (beginning 06-88)

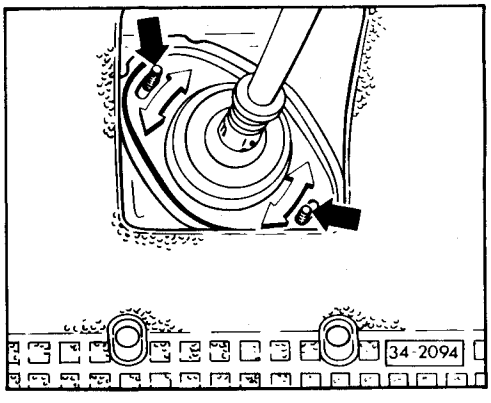

– rotate upper bearing plate so that the mounting studs (black arrows) contact opposite sides of the bearing plate
– tighten mounting nuts to 10 Nm (7 ft. lb.)

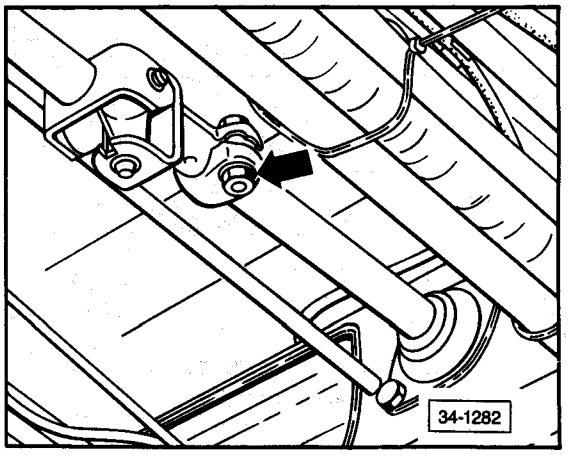

— loosen clamp (**arrow**)
- selector shaft connection must move freely

— remove skid plate

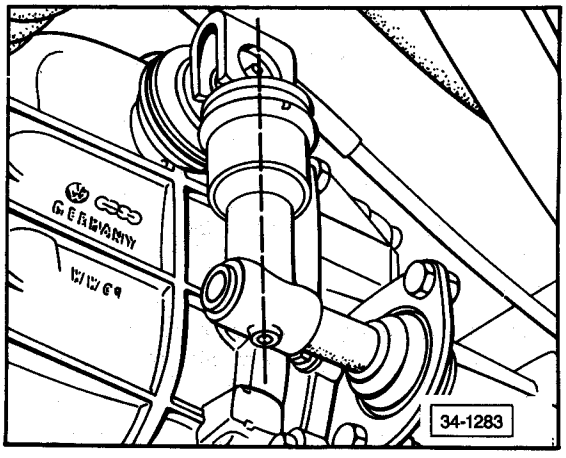

— set lever on transmission in vertical position
— move stop finger of front shift rod to center of shift mechanism housing

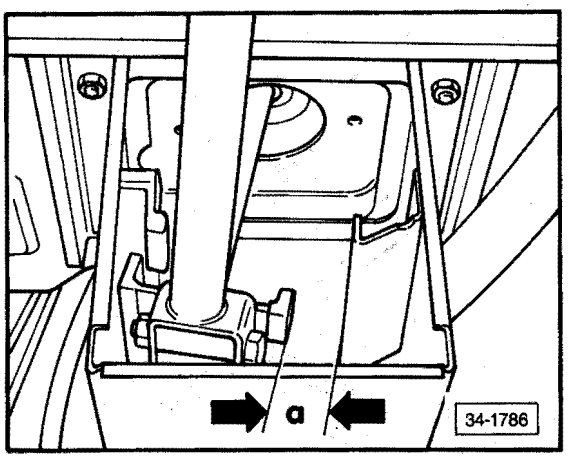

— adjust shift rod end **a** = 23 mm
  • use strip of sheet metal to measure

CAUTION

Transmission must be in neutral, lever on transmission in vertical position.

— tighten clamp in this position
— shift through all gears, they must engage smoothly without jamming
— check reverse lock-out operation

Note

With 1st gear engaged, the distance between the shift lever and heater pipe insulation must be at least 15 mm (19/32 in.).

Transmission, removing/installing

(engine remains in vehicle)

Work sequence

Removing

— disconnect battery ground strap
— remove bolts fastening top of transmission to engine
— remove rear skid plate (under engine and transmission)

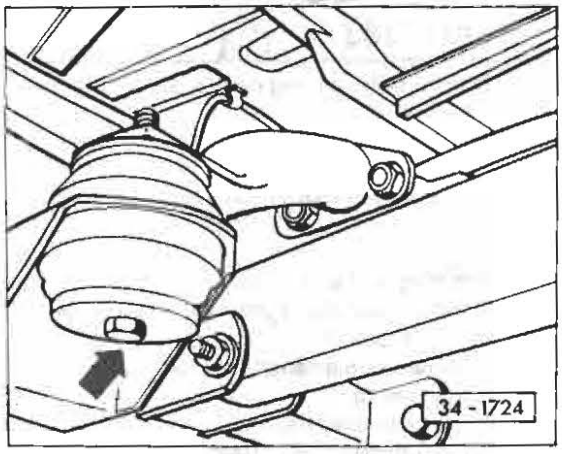

— loosen mounting bolt of front final drive (arrow) Do **NOT** remove bolt.

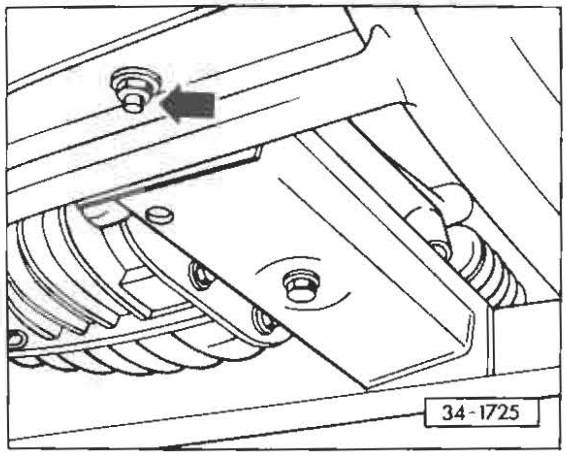

— loosen side bolts of front final drive mounting bracket (arrow) Do **NOT** remove bolts.
— remove bolts fastening driveshaft to transmission flange and tie driveshaft end to body

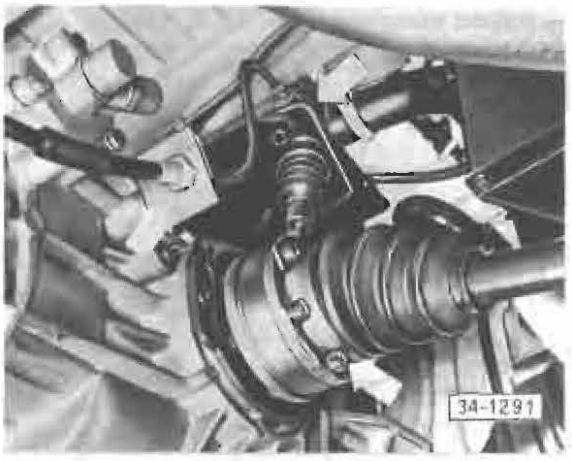

— remove left side axle shaft bolts (lower arrow) and remove shaft from transmission
— remove hydraulic clutch line bracket from transmission (center arrow) Do **NOT** disconnect hydraulic line.
— remove clutch slave cylinder from bracket on transmission (upper arrow) and hang cylinder from body with wire

— disconnect back-up light wiring
— remove right side axle shaft from transmission

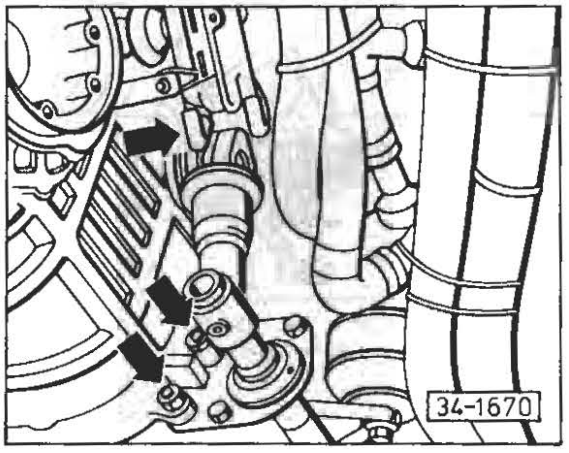

— remove shift linkage from transmission (arrows)

Vehicles with rear differential lock:
— remove vacuum hoses from lock servo and disconnect indicator light switch wiring

— remove ground cable from body

— support transmission with V.A.G. 1383

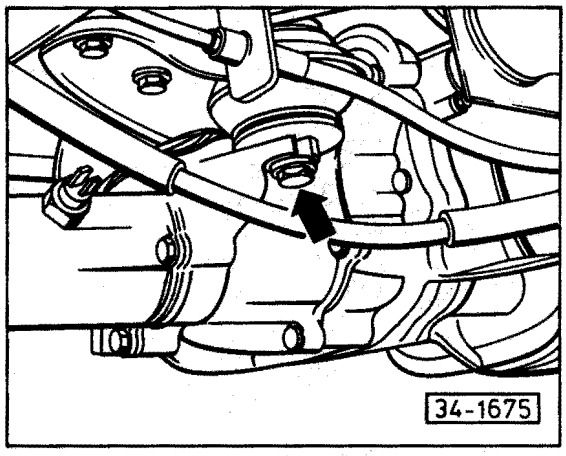

— remove front transmission bracket (arrow) and lower front of transmission approx. 15 cm (6 in.) at driveshaft flange
— disconnect starter cables
— remove vent hose

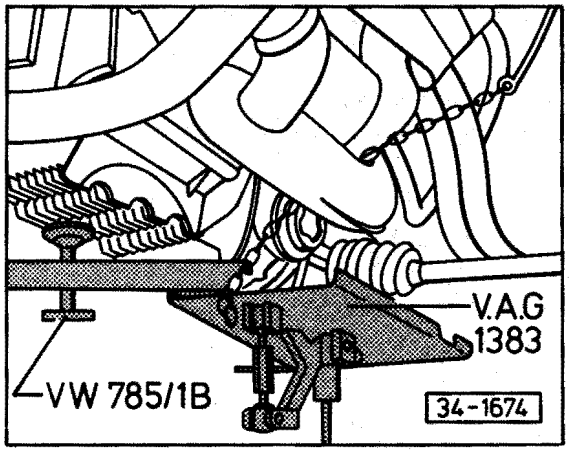

— support engine with VW 785/1B
— remove bolts fastening bottom of transmission to engine

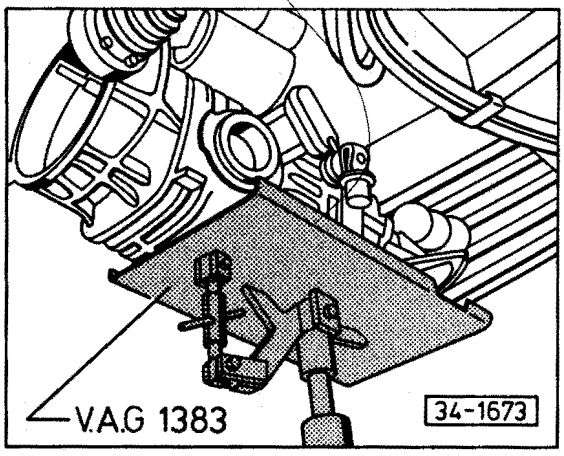

— pull transmission off engine guides and remove

Installing

Proceed in reverse order of removing and note following:

— clean mating surfaces of engine and transmission and coat lightly with silicone sealer, Part No. 176 005 05
— clean splines of mainshaft and lubricate lightly with MoS grease.
— grease needle roller bearing in crankshaft
— tighten mounting bolts of front final drive last

Tightening torques

Transmission to engine	30 Nm (22 ft lb)
Axle shaft to transmission	35 Nm (26 ft lb)
Driveshaft to transmission	35 Nm (26 ft lb)

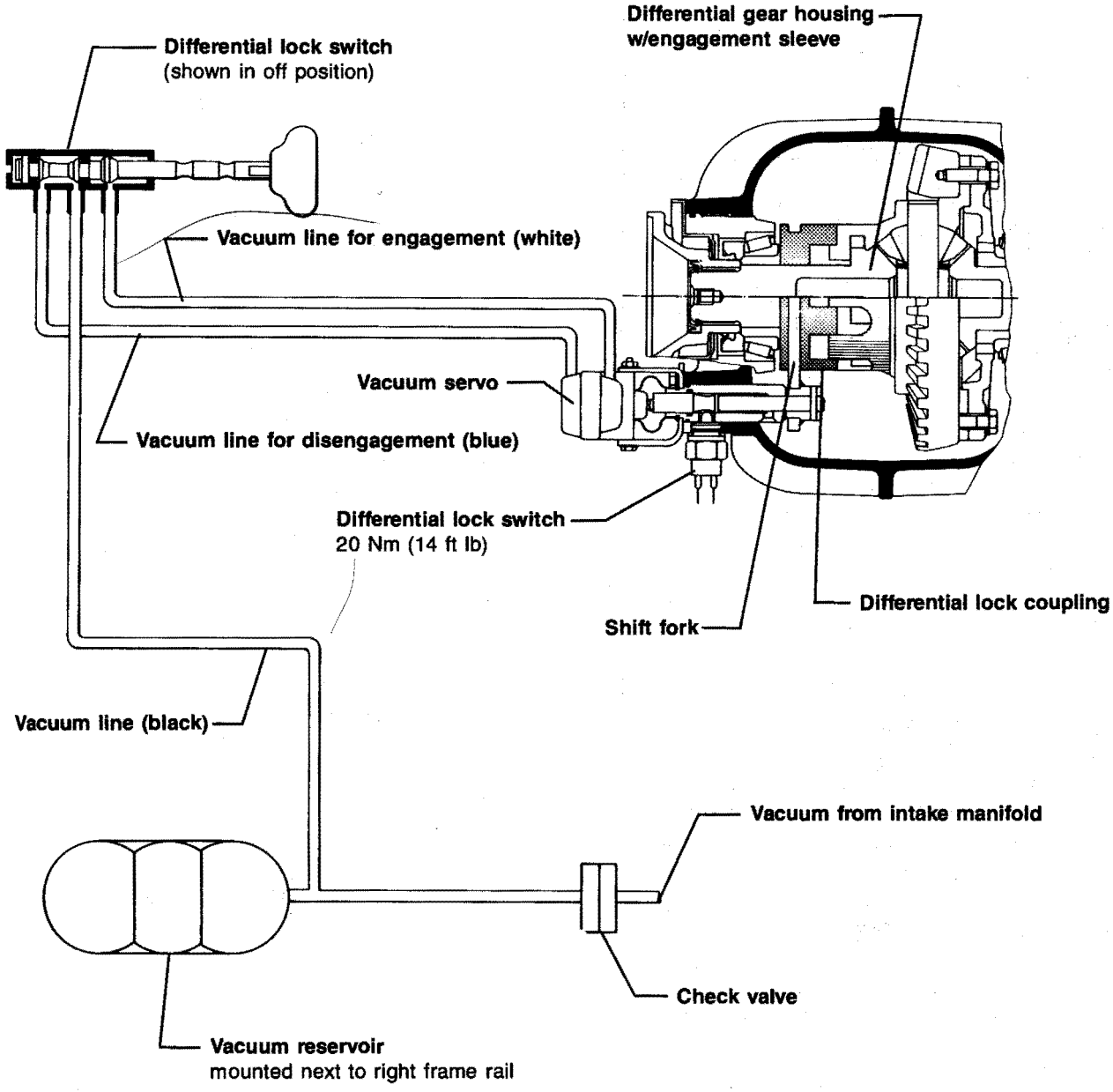
Differential gear housing w/engagement sleeve
Differential lock switch (shown in off position)
Vacuum line for engagement (white)
Vacuum servo
Vacuum line for disengagement (blue)
Differential lock switch 20 Nm (14 ft lb)
Differential lock coupling
Shift fork
Vacuum line (black)
Vacuum from intake manifold
Check valve
Vacuum reservoir mounted next to right frame rail
34-1658

Differential lock servo, removing

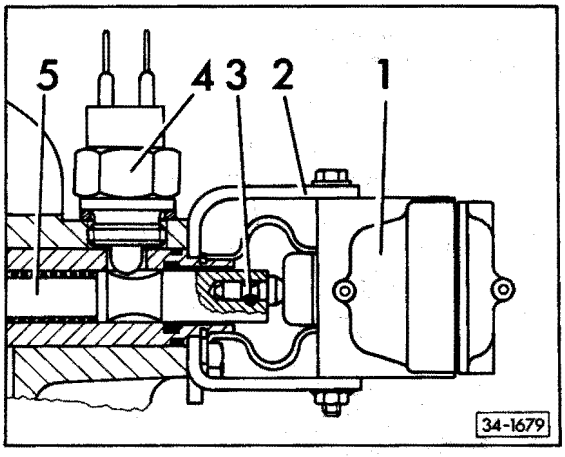

1 servo
2 bracket
3 spring pin
4 switch for lock indicator light
5 operating rod

Work sequence

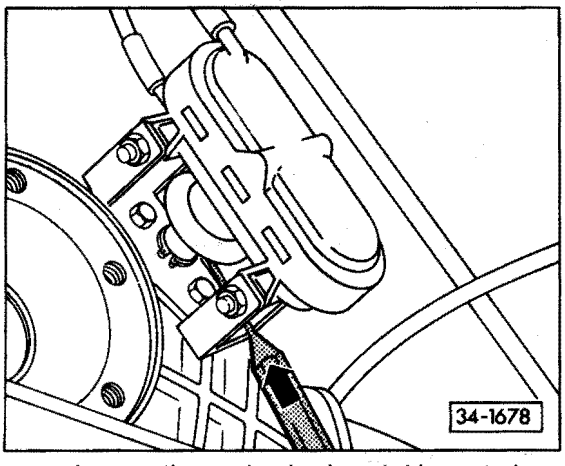

— push protective casing back and drive out pin (arrow)
— remove vacuum lines
— remove bolts attaching servo to bracket

Note

Only white vacuum hoses are supplied as spare parts (Part No. N 20 139.1). When replacing hose, cut to proper length and mark with tape of appropriate color.

Differential lock control, repairing

Switch, removing/installing

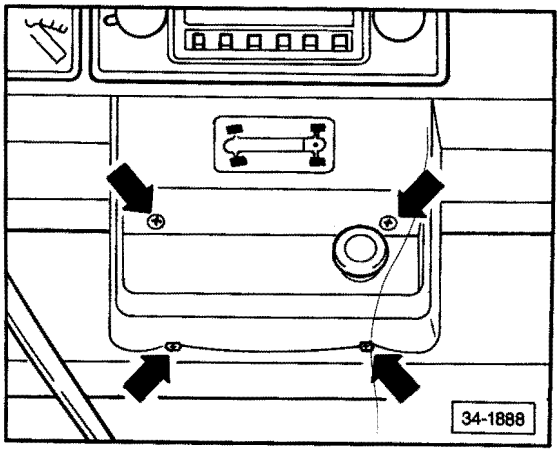

— unscrew knob, if necessary hold switch piston with needle nose pliers
— remove trim plate (**arrows**)

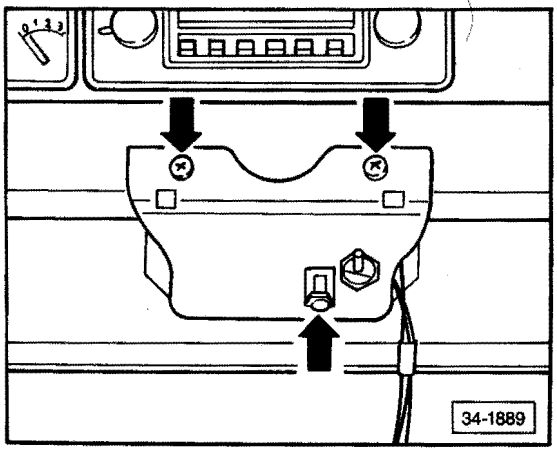

— remove bracket

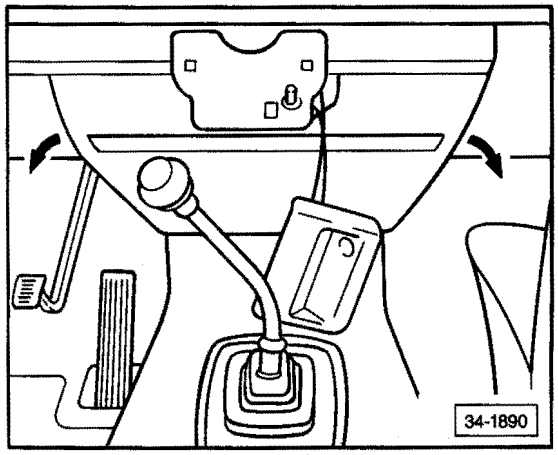

— remove trim

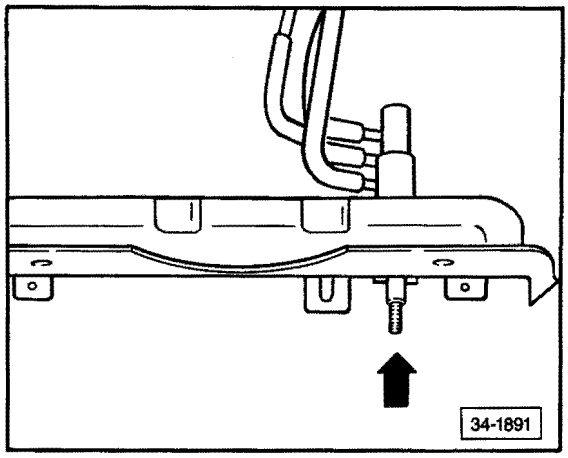

— press switch out of guide bushing

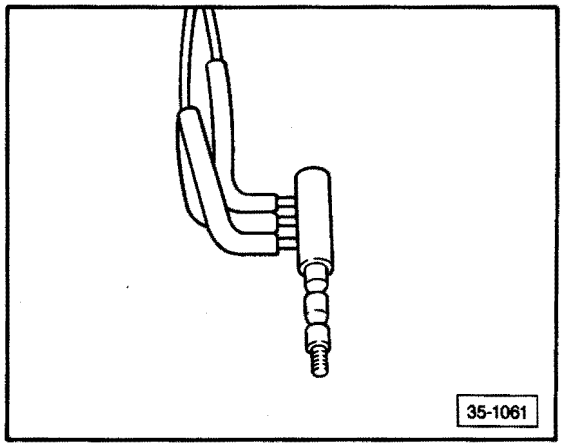

— detach vacuum hose
— note hose locations

4-Speed 091 Manual Transmission Case, Gears, Shafts

Quick Data

Index

— Adjusting rings 35.3, 35.4
— Assembly 35.2
— Clutch housing/mechanism 35.12
— Differential 35.4
— Drive flange 35.3, 35.4
  oil seal 34.18, 35.15
— Gear
  1st gear needle bearing 35.27
  3rd gear end play 35.29
— Gear carrier/Gearshift housing 35.6, 35.7, 35.18
— Gear carrier housing assembly 35.8, 35.16
— Gearshift lever 34.3
— Gearshift linkage 34.2, 34.3
— Interlock/Detent plungers 35.17
— Installing 34.15
— Lever bearing plate 34.4
— Main shaft assembly 35.9, 35.20
  ball bearing 35.23
  oil seal 35.13
— Pinion needle bearing 35.23, 35.29
— Pinion shaft assembly 35.9, 35.24, 35.25
— Rear main shaft 35.5
— Release shaft bushing 35.13
— Removing 34.14, 34.15
— Retaining ring 35.7
— Reverse gear 35.14
  end play 35.17
  shaft circlip 35.15
— Rocker lever shaft 35.19
— Selector shaft 35.19
— Shift forks 35.10, 35.11
— Shift rod 34.3
— Starter bushing 35.13
— Synchronizers
  1st/2nd gear 35.26, 35.28
  3rd/4th gear 35.21, 35.22
  circlips 3rd/4th gear 35.21, 35.26
  ring identification 35.30
— Tapered roller bearing 35.26, 35.27
— Transmission housing 35.14

4-Speed 091/1
—See page 35.31

5-Speed 094
—See page 35.61

094-4WD Syncro
—See page 35.93

Transmission/Final drive lubricant:
Hypoid oil API/GL-4; MIL-L2105
SAE 80W, SAE 80W/90
Capacity: 3.5 ltr (3.7 US qt)

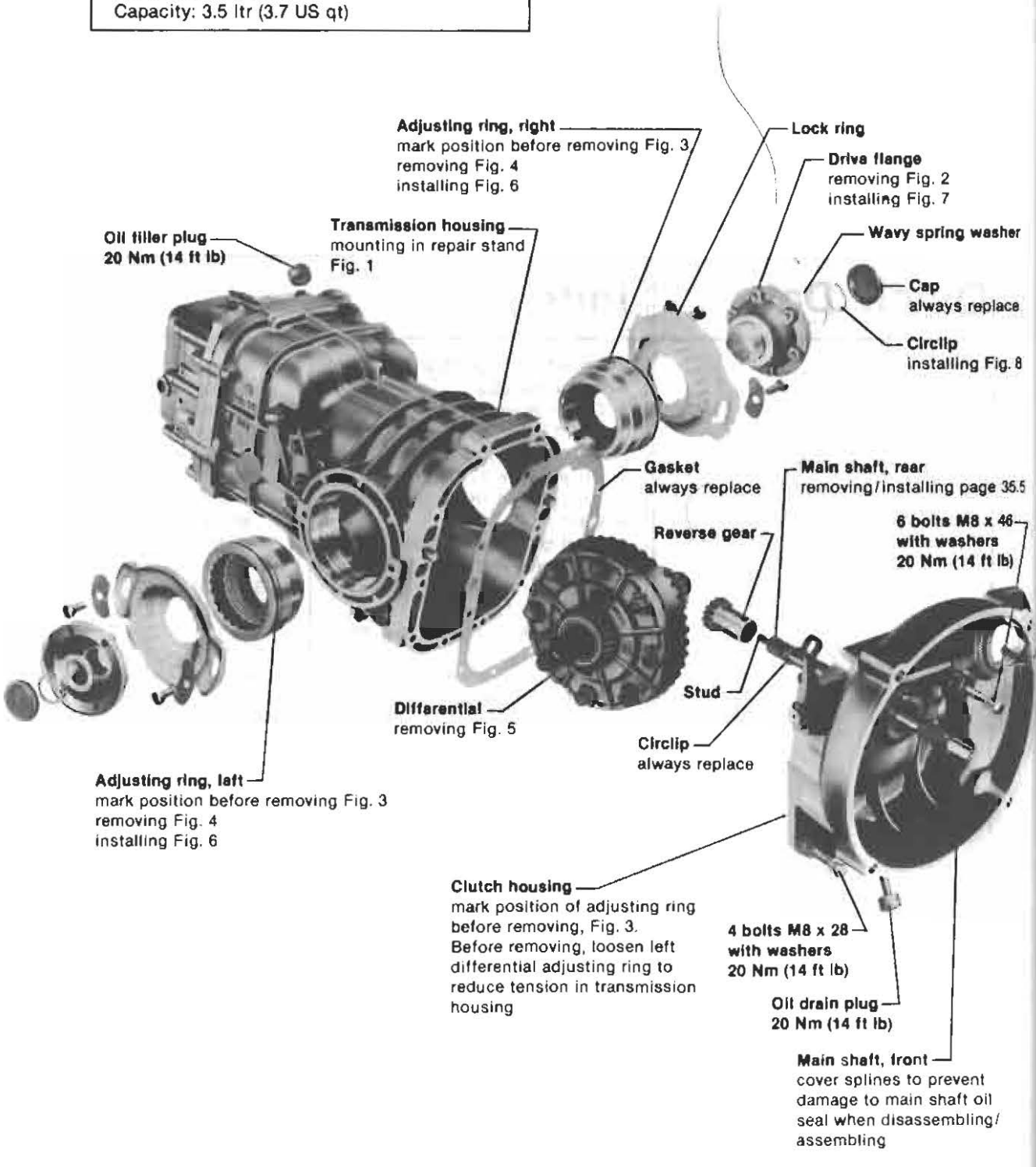



Fig. 1 **Transmission housing, mounting in repair stand**

— mount transmission in repair stand
— drain transmission oil

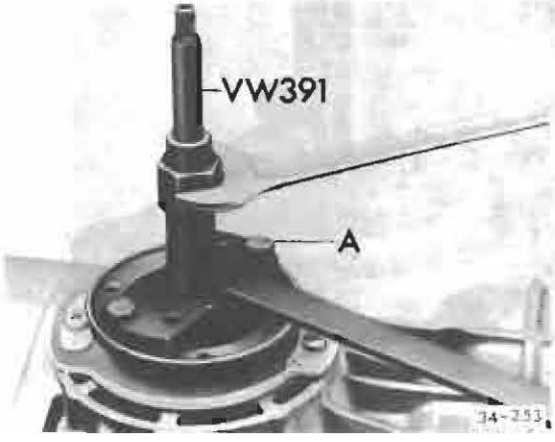

Fig. 2 **Drive flange, removing**

— remove circlip and wave washer
— attach VW391 to flange with 2 bolts
• A = M8 x 30 bolts
— pull drive flange out



Fig. 3 **Adjusting ring, marking position**

Note

Before starting repair work (which does not require final drive to be adjusted) mark position of adjusting rings on transmission housing. Measure depth to which they are installed with VW 382/7 and write down readings

— scribe left side (ring gear side) with one mark (arrow)
— scribe right side with two marks

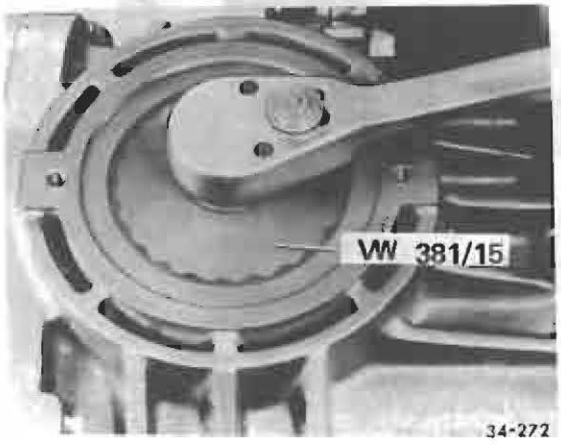

Fig. 4 **Adjusting rings, removing**



Fig. 5 Differential, removing

— remove adjusting rings and rear main shaft
— lift out differential

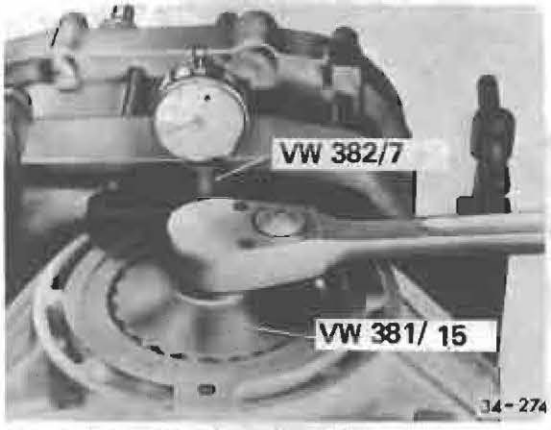

Fig. 6 Adjusting rings, installing

— install left and right adjusting rings and align marks at depth previously measured
— lubricate threads with MoS_2 grease

CAUTION

Do not tighten left side adjusting ring until clutch housing has been installed and bolts torqued

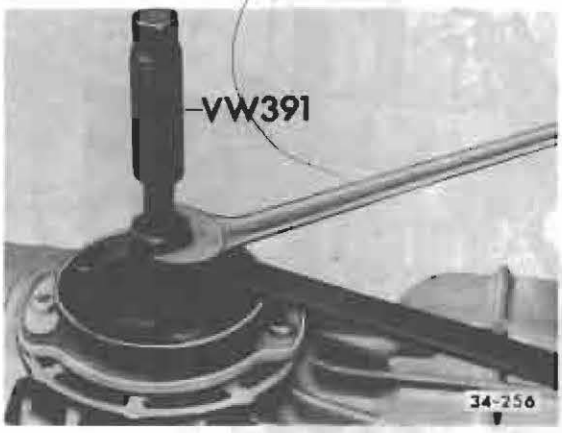

Fig. 7 Drive flange, installing



Fig. 8 Circlip for drive flange, installing

— insert wave washer
— press circlip into groove with VW 244b and at same time check that washer is centered

Rear main shaft, removing/installing

Work sequence

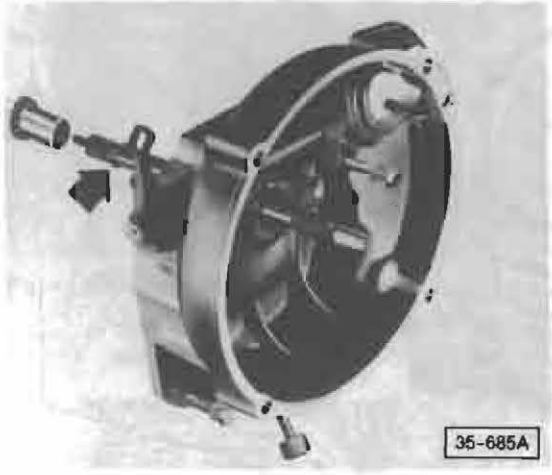

Removing

– remove circlip (arrow)
– push reverse gear backward and screw out main shaft

Installing

– screw front and rear main shafts together, then back off one spline
– push reverse gear on and install new circlip

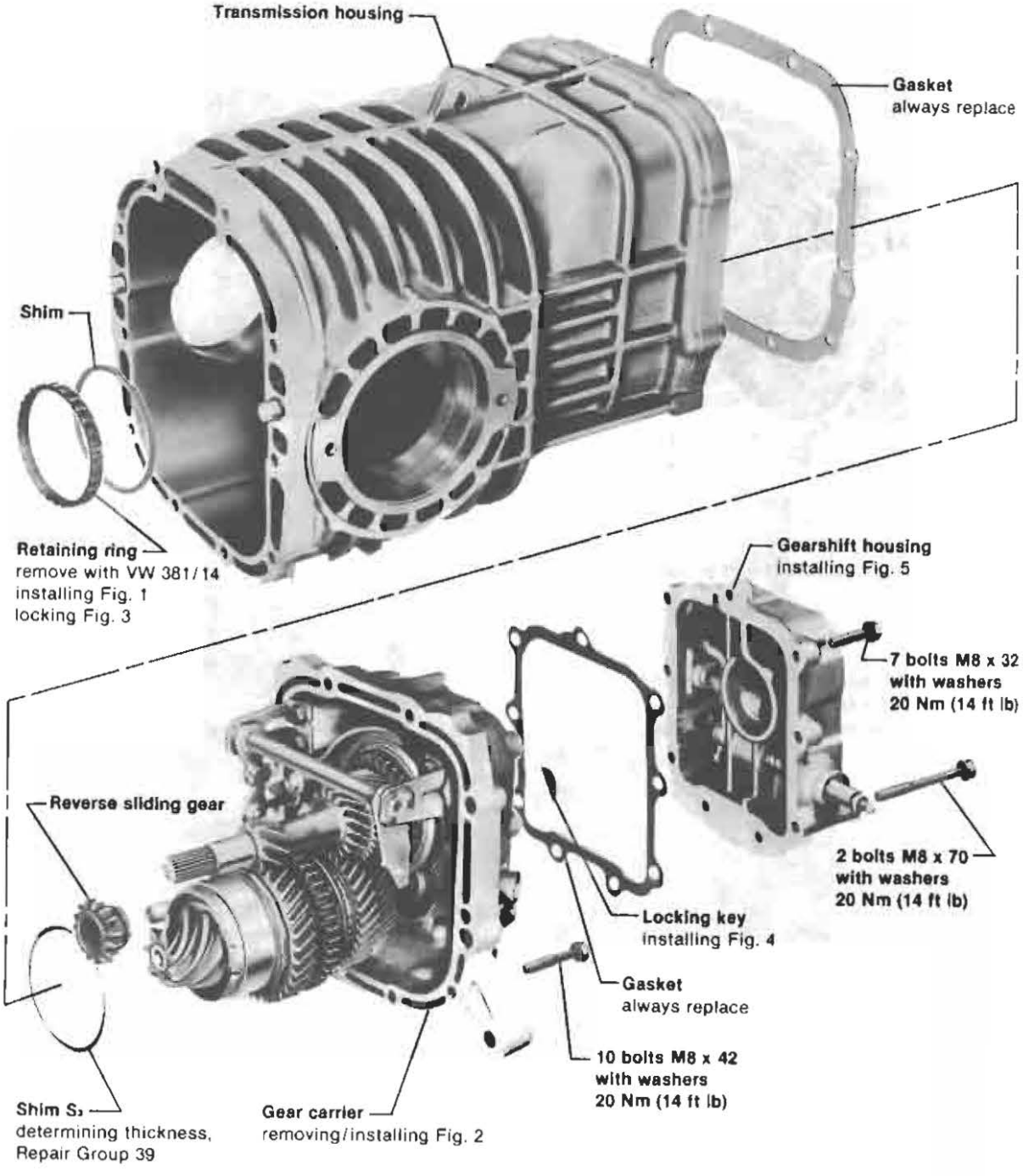

Note

Differential must be removed before gear carrier can be removed, see page 35.4

35-689



Fig. 1 **Retaining ring, installing**

— tighten to 225 Nm (162 ft lb), then back off and retighten to 225 Nm (162 ft lb)

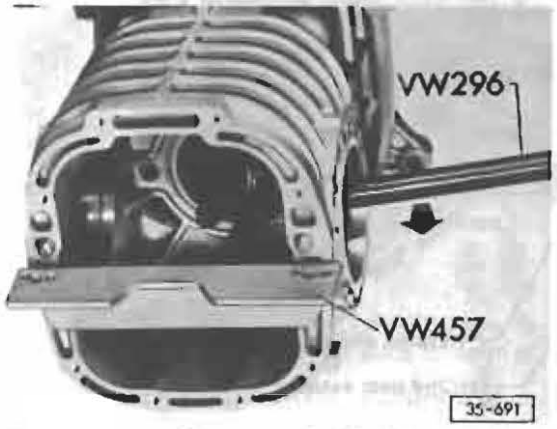

Fig. 2 **Gear carrier, removing/installing**

Note

If bearing and/or transmission housing are replaced, and dimension **r** is not marked on ring gear, pinion depth must be measured and noted **before** gear carrier is removed. This is dimension **r**. See Repair Group 39. When assembling, parts must be installed in same position. See Ring gear/pinion, adjusting, Repair Group 39

Work sequence

Removing

- use two M8 x 20 bolts to attach VW 457

– press gear carrier out with VW 296

Installing

– tap on pinion with plastic hammer to install
– turn reverse shaft so that reverse sliding gear slips onto splines properly
– align flat on bearing with recess in housing

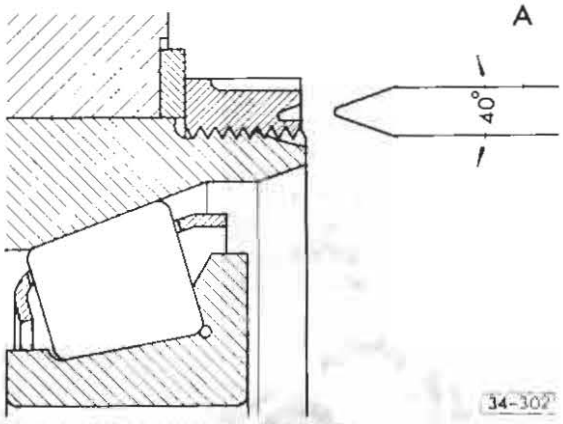

Fig. 3 **Retaining ring, locking**

— lock ring by peening twice with tool **A**

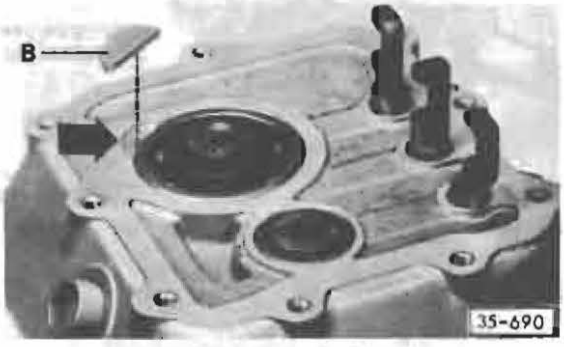

Fig. 4 **Main shaft bearing locking key B, installing**

— press locking key **B** into recess (arrow)

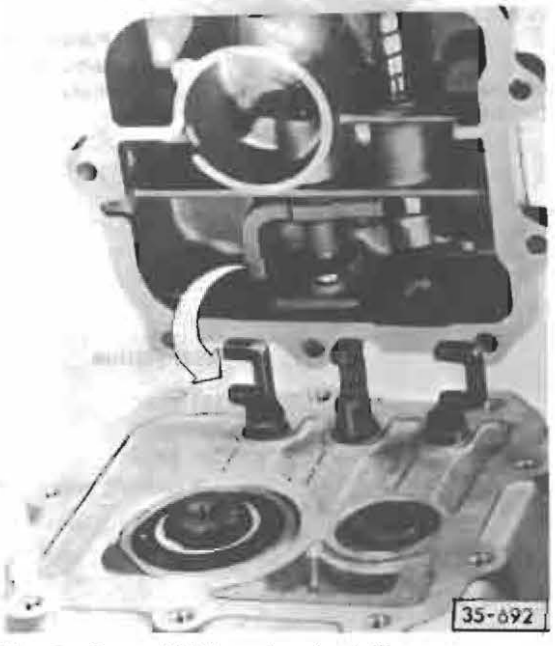

Fig. 5 **Gear shift housing, installing**

— guide inner shift lever into 3rd/4th gear selector shaft (arrow) when installing

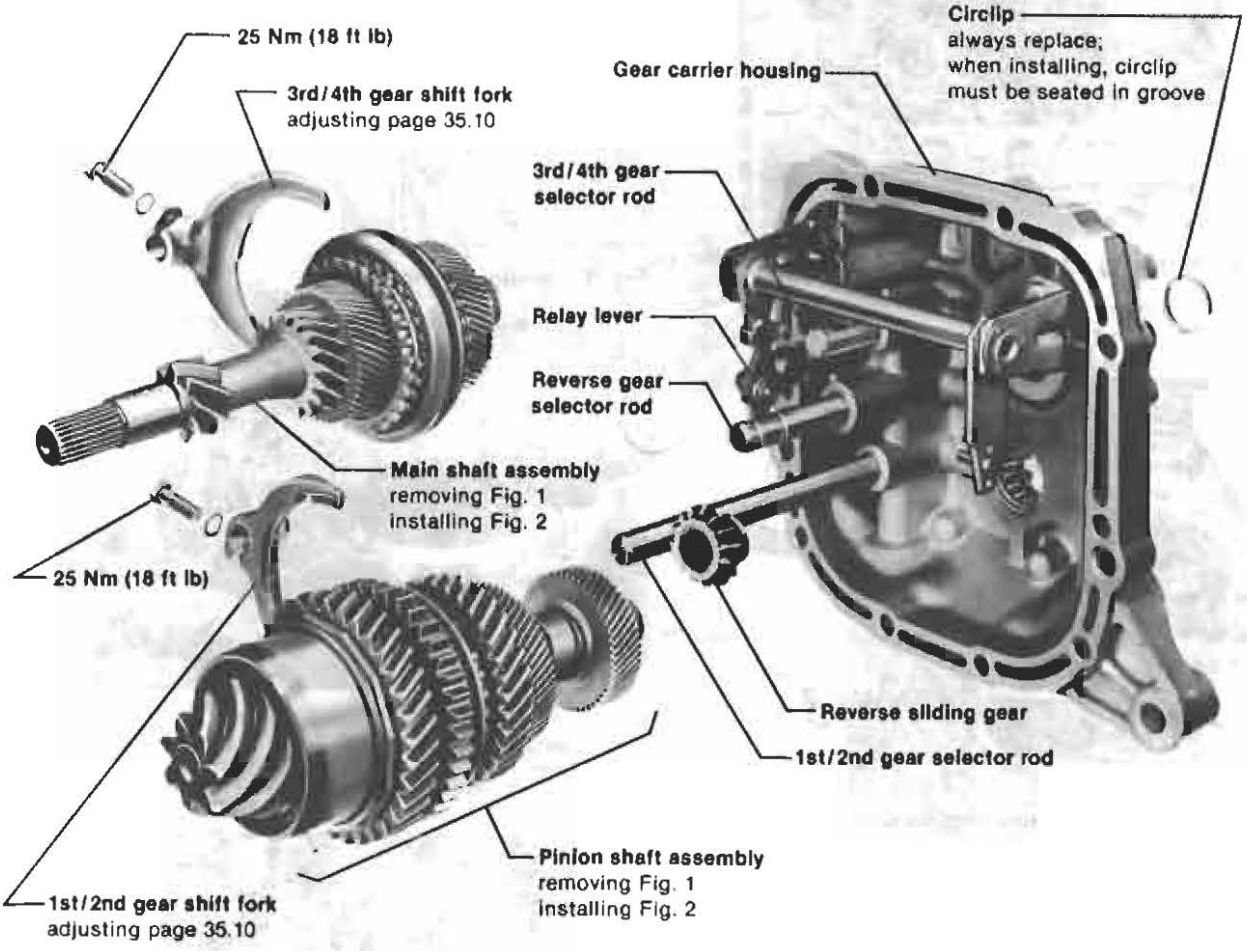

35-700

Gear Ratios

1st gear	3.78(9:34)
2nd gear	2.06(17:35)
3rd gear	1.26(50:63)
4th gear	0.852(61:52)
Reverse	3.28(13:16 x 15:40)
Final drive	4.57(7:32)



Fig. 1 **Main shaft/pinion shaft assemblies, removing**

— remove circlip
— remove shift fork for 1st/2nd gear
— move selector shaft back to neutral

— remove clamp bolt for 3rd/4th gear shift fork
— engage 3rd gear, pull selector shaft back until shift fork is free
— engage 4th gear

— loosen union nut on relay lever support
— lift pinion shaft when pressing out and guide it carefully so that gears and needle bearings do not jam and get damaged
— check 3rd/4th gear for free movement

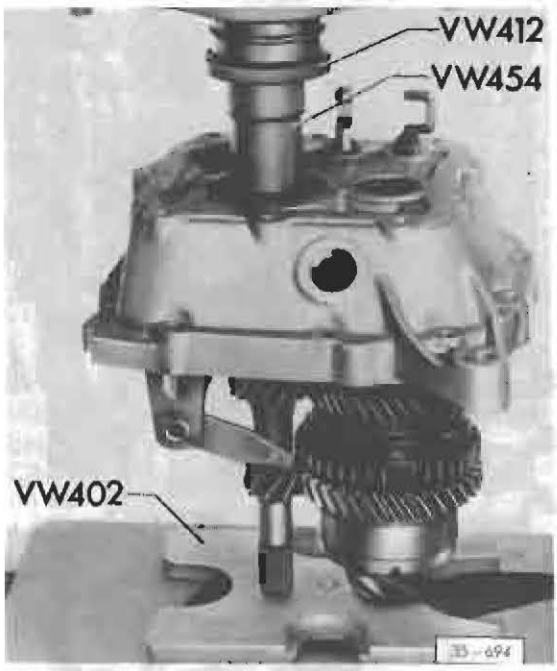

Fig. 2 **Main shaft/pinion shaft assemblies, installing**

— insert 3rd/4th gear shift fork and check for free movement when pressing in shafts
— lift pinion shaft and guide carefully when pressing in
— after installing shafts, adjust shift forks, see page 35.10

Shift forks, adjusting

Work sequence

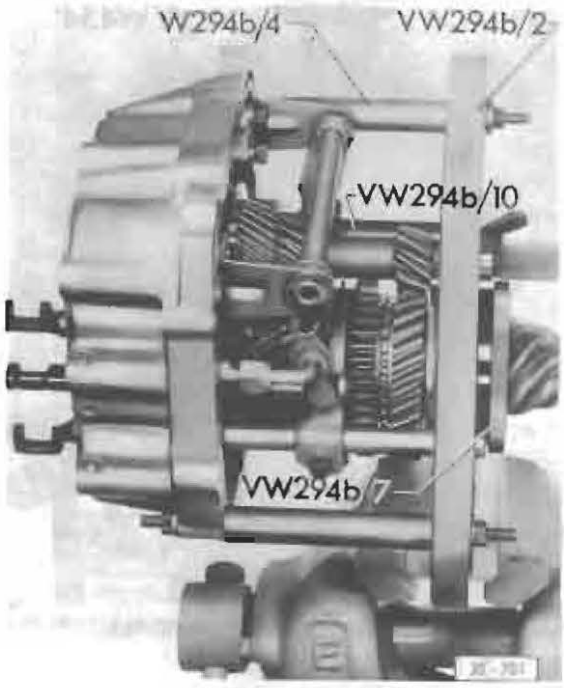

— position gear carrier, with shim S_3 (see Repair Group 39), in tool VW 294b **without** gasket for gear carrier
  • length of bolts VW 294b = 106 mm (4-3/16 in.)
— tighten retaining ring VW 294b/7 by hand
— install shift forks for 1st/2nd and 3rd/4th gears

CAUTION

Shift fork for 1st/2nd gear (wider fork, marking: No. 551 A) is installed with flat side **away** from gear carrier.

Shift fork for 3rd/4th gear (thinner fork, marking: No. 561 A) is installed with flat side **toward** gear carrier.

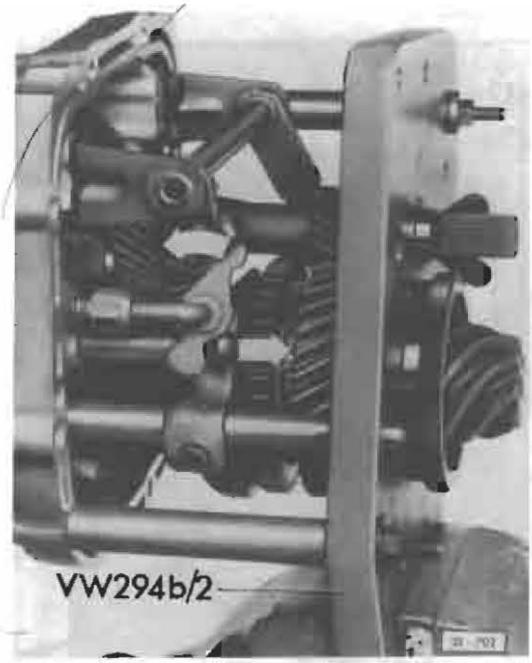

— install relay lever support together with relay lever

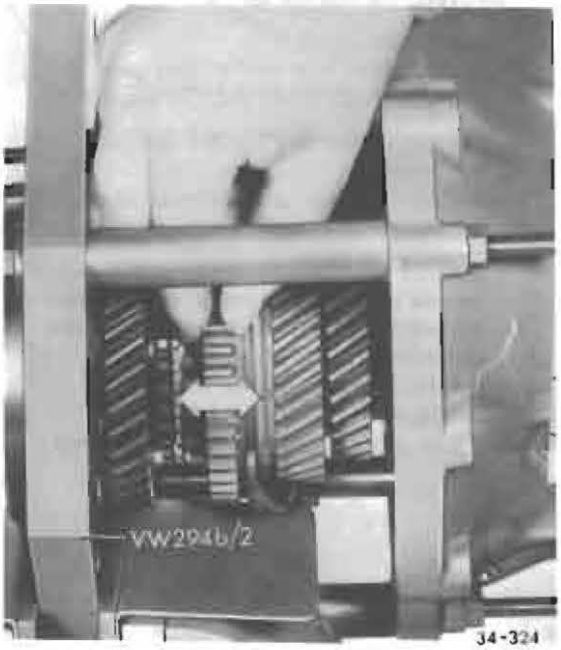

— put 1st/2nd gear selector shaft in 2nd gear position
— slide operating sleeve with fork over synchronizing teeth until it is against 2nd gear
— center shift fork in groove of operating sleeve and tighten clamp screw

CAUTION

Shift fork must not rub or exert pressure on sides of groove in operating sleeve when in neutral position or when gear is engaged. **There must always be clearance**

– select 1st and 2nd gears several times while turning main shaft and check clearance of shift fork in operating sleeve in each position
  • if necessary, alter shift fork position until there is same amount of clearance on selector shaft in both end positions
– tighten clamp screw to 25 Nm (18 ft lb)
– put 3rd/4th gear selector shaft in 3rd gear position
– adjust 3rd/4th gear shift fork in same way as 1st/2nd gear shift fork

CAUTION

For correct adjustment of 3rd/4th gears, main shaft ball bearing must be pressed fully into gear carrier housing

– press reverse gear selector shaft into reverse gear position

Note

After repair work on gear carrier housing, adjust axial play in reverse sliding gear before adjusting reverse gear

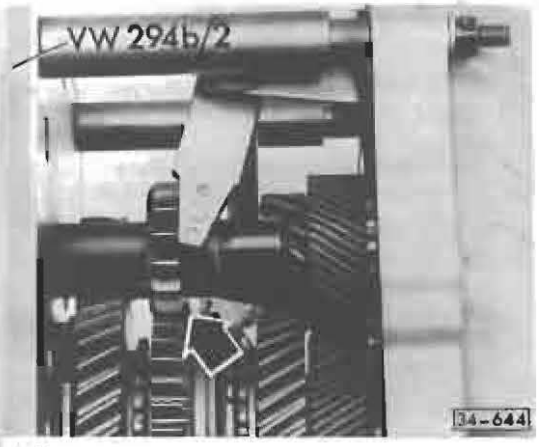

– adjust reverse gear so that sliding gear is fully in mesh with teeth on operating sleeve for 1st/2nd gear (arrow)
– tighten union nut on relay lever support

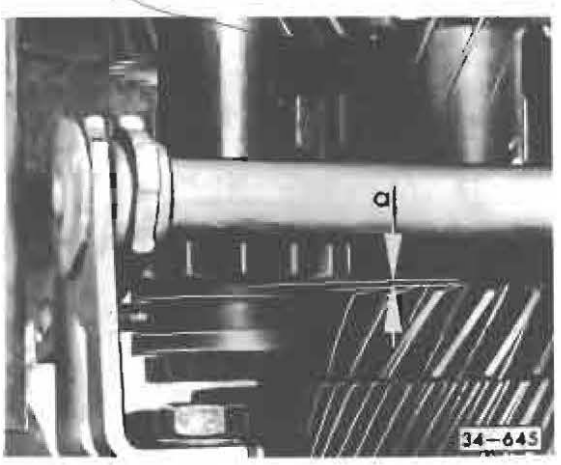

— shift out of reverse gear and press sliding gear lightly toward gear carrier housing. Clearance between reverse gear and 2nd gear on main shaft must be
  • **a** = min. 0.5 mm (0.020 in.)

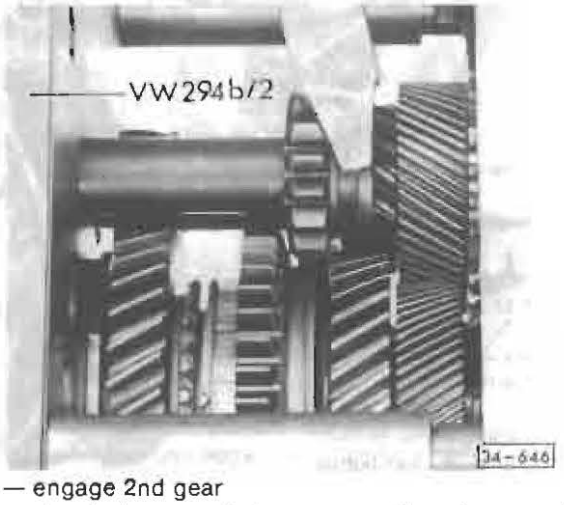

— engage 2nd gear
— check clearance between operating sleeve and reverse sliding gear in this position and adjust if necessary
— check interlock mechanism
  • **when gear is engaged it must not be possible to engage any other gear**

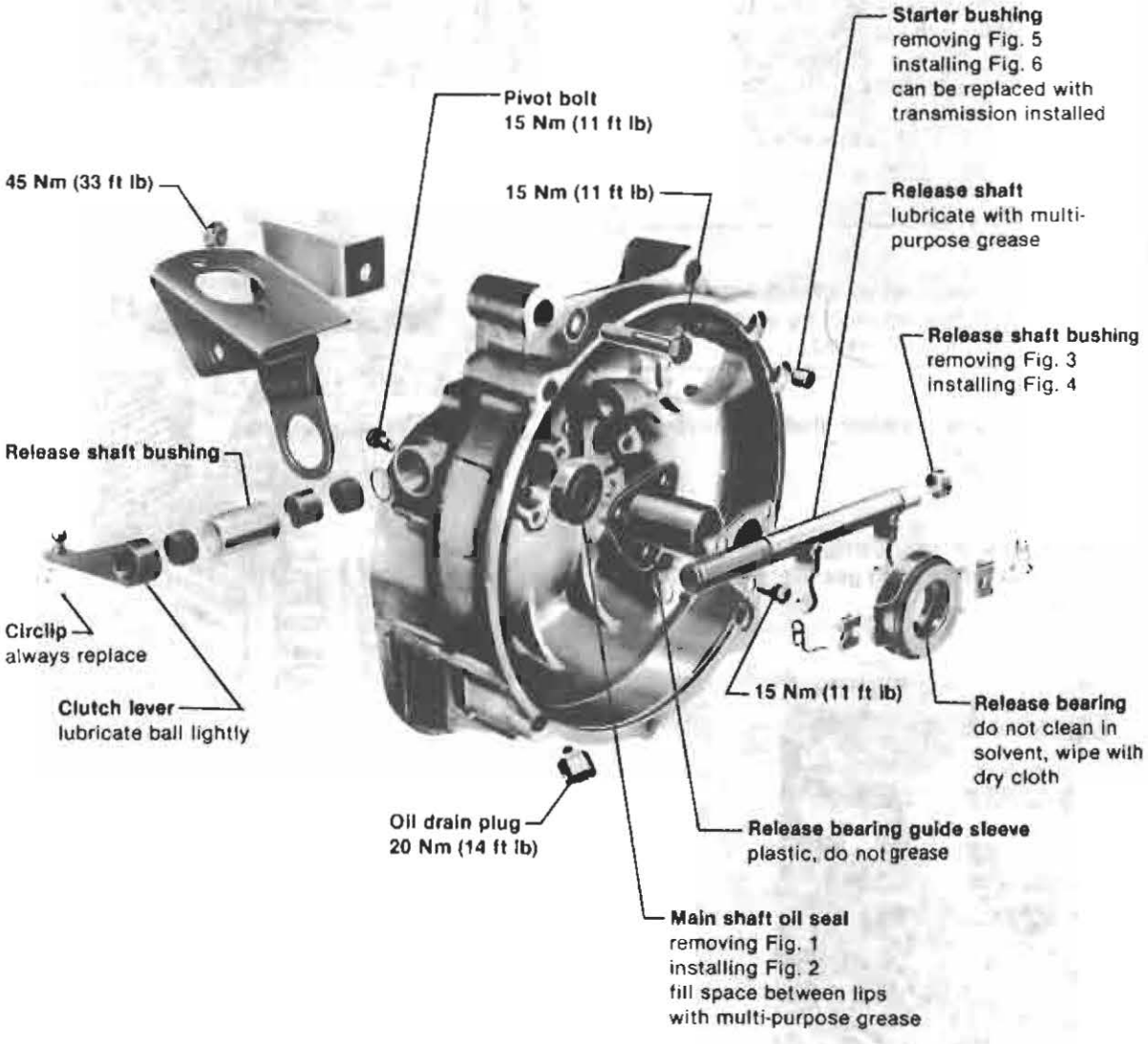
Starter bushing
removing Fig. 5
installing Fig. 6
can be replaced with
transmission installed
Pivot bolt
15 Nm (11 ft lb)
45 Nm (33 ft lb)
15 Nm (11 ft lb)
Release shaft
lubricate with multi-
purpose grease
Release shaft bushing
removing Fig. 3
installing Fig. 4
Release shaft bushing
Circlip
always replace
Clutch lever
lubricate ball lightly
15 Nm (11 ft lb)
Release bearing
do not clean in
solvent, wipe with
dry cloth
Oil drain plug
20 Nm (14 ft lb)
Release bearing guide sleeve
plastic, do not grease
Main shaft oil seal
removing Fig. 1
installing Fig. 2
fill space between lips
with multi-purpose grease

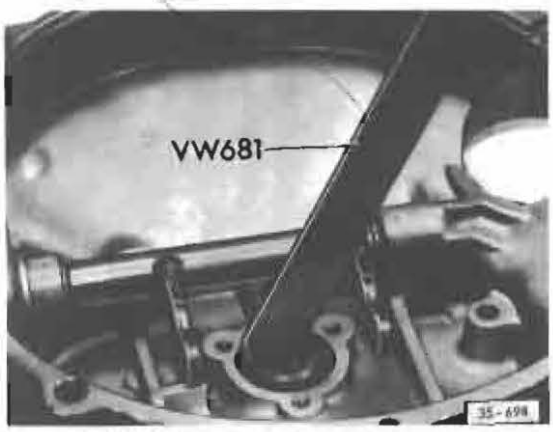

Fig. 1 **Main shaft oil seal, removing**

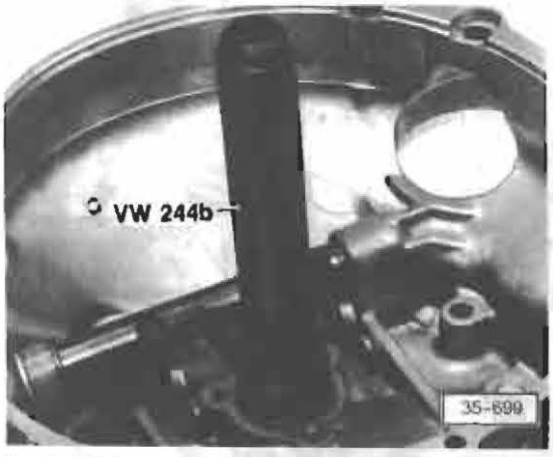

Fig. 2 **Main shaft oil seal, installing**

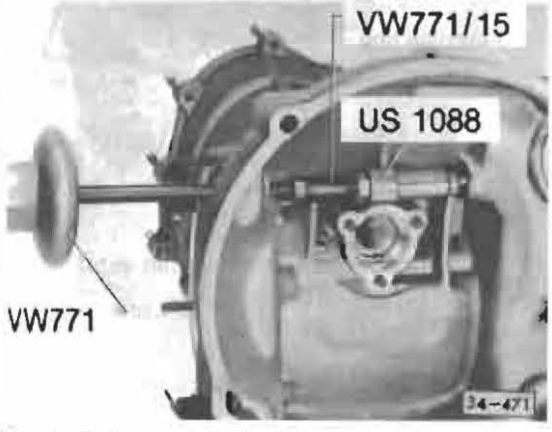

Fig. 3 **Release shaft bushing, removing**

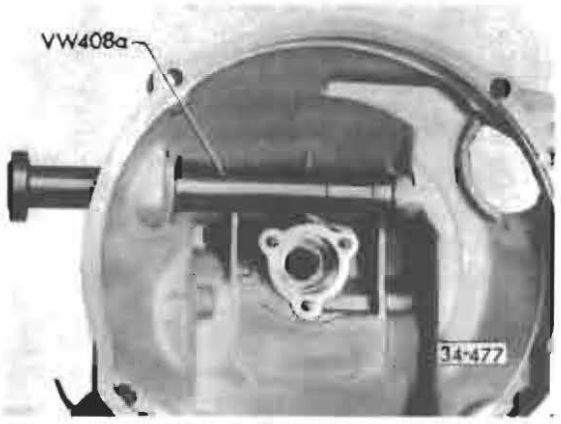

Fig. 4 **Release shaft bushing, installing**

— drive in flush

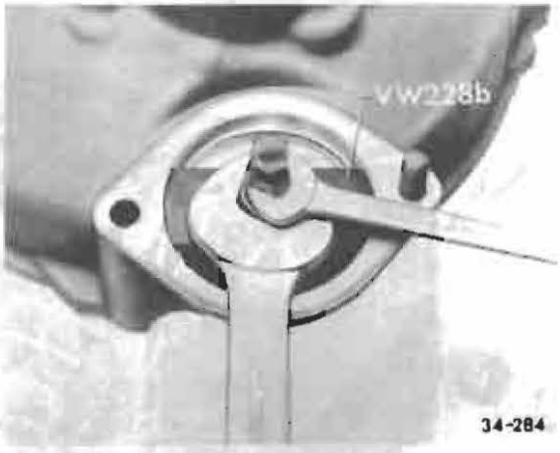

Fig. 5 **Starter bushing, removing (transmission installed)**

• when transmission is removed, use drift VW 222a



Fig. 6 **Starter bushing, installing**

— lubricate bushing and drive in flush

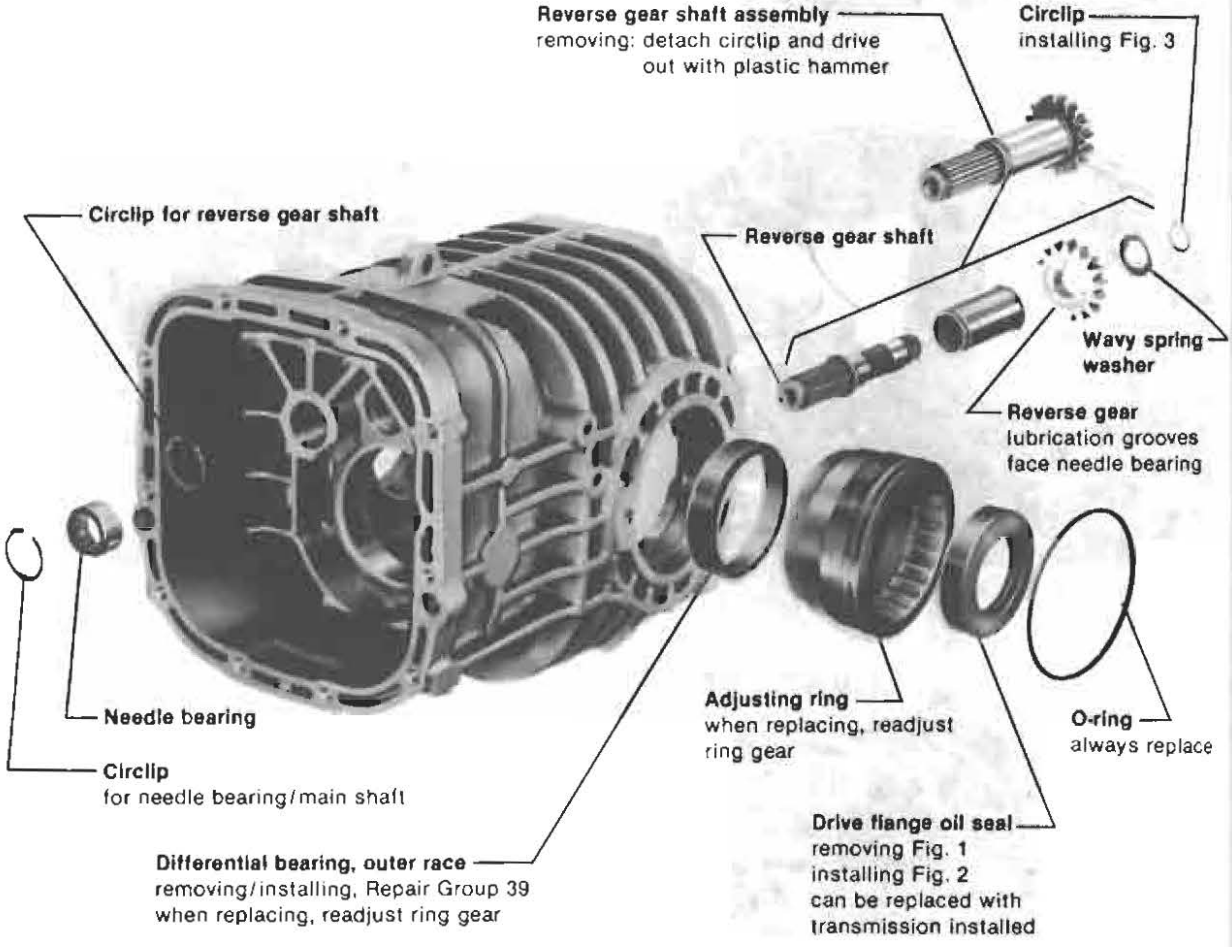
Reverse gear shaft assembly
removing: detach circlip and drive out with plastic hammer
Circlip
installing Fig. 3
Circlip for reverse gear shaft
Reverse gear shaft
Wavy spring washer
Reverse gear
lubrication grooves face needle bearing
Needle bearing
Circlip
for needle bearing/main shaft
Adjusting ring
when replacing, readjust ring gear
O-ring
always replace
Drive flange oil seal
removing Fig. 1
installing Fig. 2
can be replaced with transmission installed
Differential bearing, outer race
removing/installing, Repair Group 39
when replacing, readjust ring gear

35-695



Fig. 1 **Drive flange oil seal, removing**



Fig. 2 **Drive flange oil seal, installing**

— press in flush

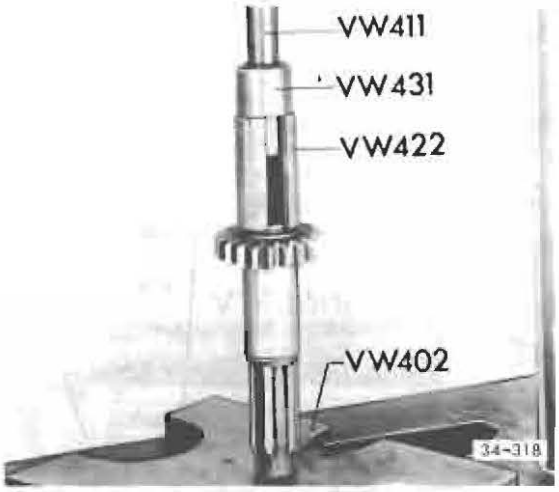

Fig. 3 **Reverse gear shaft circlip, installing**

— press circlip into groove
— squeeze into groove with waterpump pliers

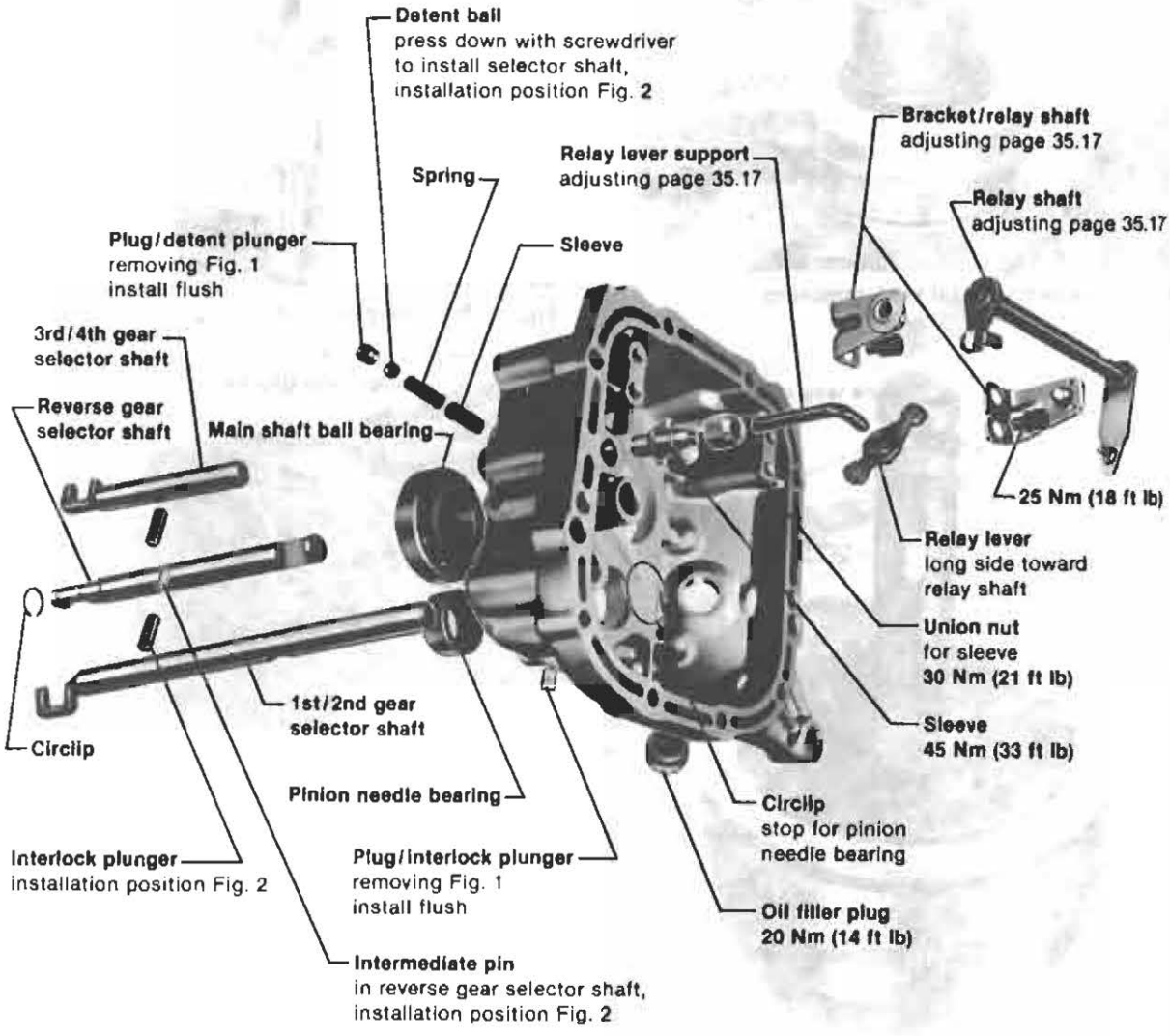
Detent ball
press down with screwdriver
to install selector shaft,
installation position Fig. 2
Spring
Relay lever support
adjusting page 35.17
Bracket/relay shaft
adjusting page 35.17
Relay shaft
adjusting page 35.17
Plug/detent plunger
removing Fig. 1
install flush
Sleeve
3rd/4th gear
selector shaft
Reverse gear
selector shaft
Main shaft ball bearing
25 Nm (18 ft lb)
Relay lever
long side toward
relay shaft
Union nut
for sleeve
30 Nm (21 ft lb)
Sleeve
45 Nm (33 ft lb)
1st/2nd gear
selector shaft
Circlip
Pinion needle bearing
Circlip
stop for pinion
needle bearing
Interlock plunger
installation position Fig. 2
Plug/interlock plunger
removing Fig. 1
install flush
Oil filler plug
20 Nm (14 ft lb)
Intermediate pin
in reverse gear selector shaft,
installation position Fig. 2

35-703



Fig. 1 **Plug for interlock/detent plunger, removing**

— tap 6 mm thread in plug and pull out with bolt (always use new plug)

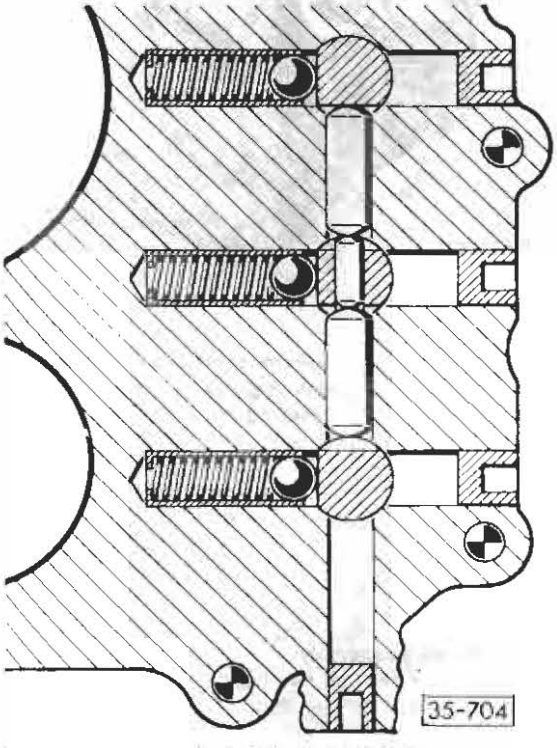

Fig. 2 **Interlock plungers, positioning**

— check that when gear is engaged it is not possible to engage any other gear

Reverse gear clearance, adjusting

Note

When reverse relay shaft and brackets have been removed, play between reverse gear and pin (arrow) on relay shaft must be adjusted by moving shaft and brackets vertically (as shown)

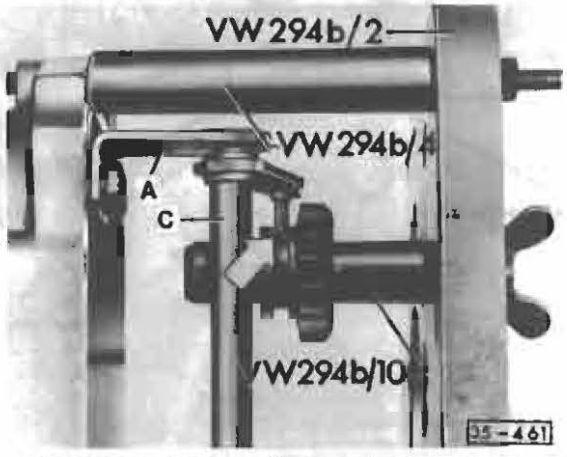

— install gear carrier with reverse gear in setting tool VW 294b
— loosen bolts on both brackets
— slide bracket **A** down against shaft **C** until pin (arrow) on relay shaft is firmly against reverse gear
— pull bracket back slightly until there is clearance between pin and reverse gear
— tighten bolts on bracket **A**

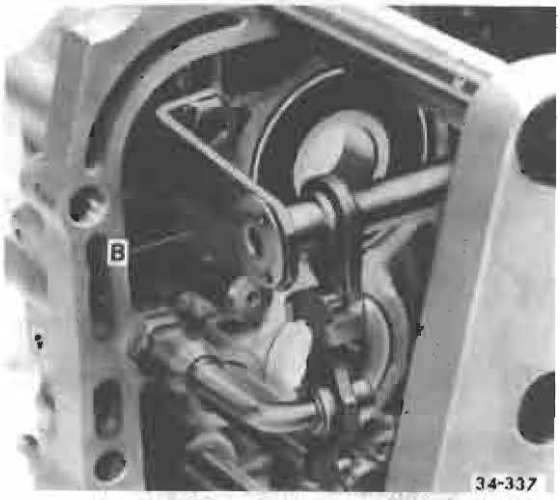

— press bracket **B** against relay shaft until relay shaft is installed firmly and without play
— tighten bolts on bracket **B**

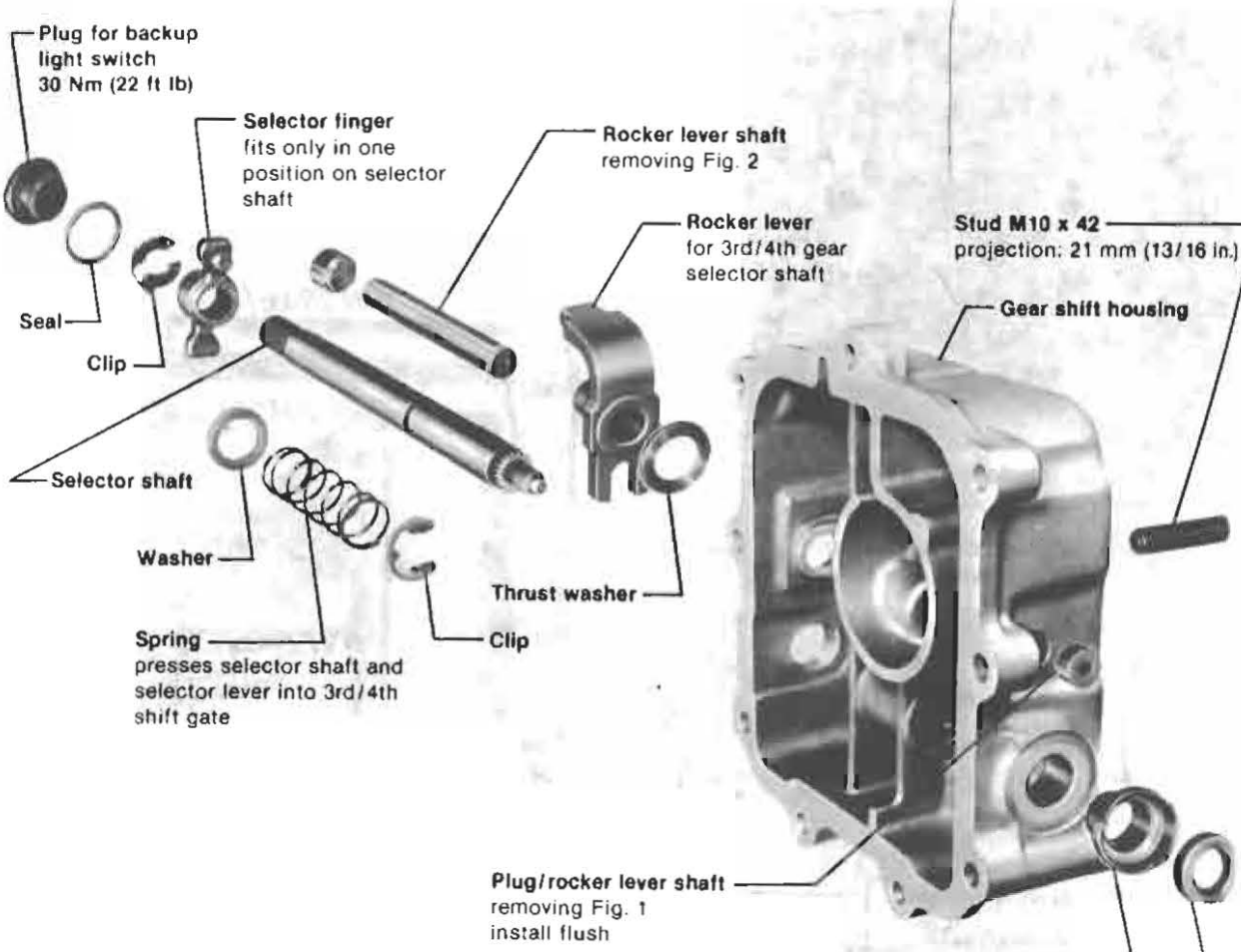

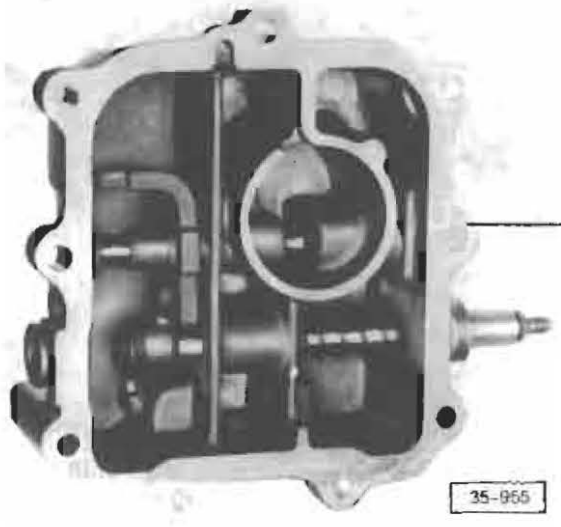

Gear shift housing assembly
shows position of selector shaft and rocker shaft parts when installed

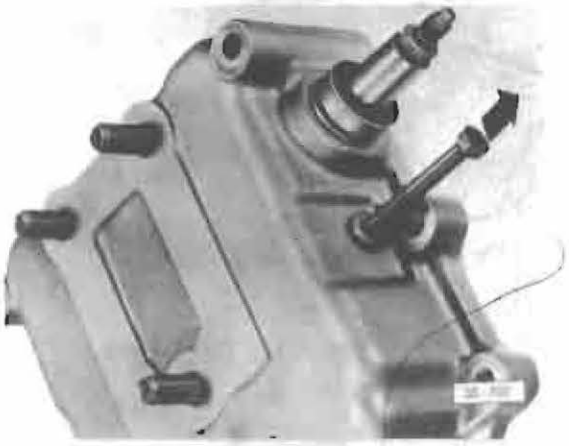

Fig. 1 **Plug for rocker lever shaft, removing**

— tap 6 mm thread in plug and pull out with bolt (always use new plug)

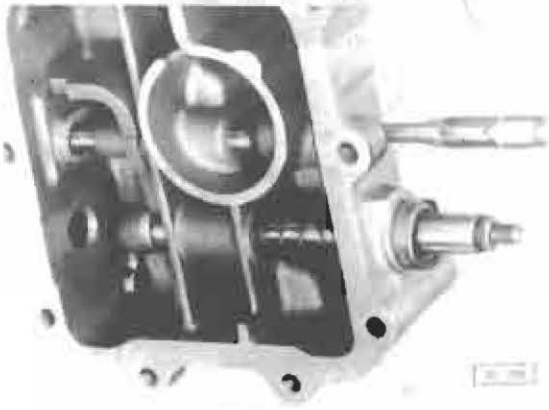

Fig. 2 **Rocker lever shaft, removing**

— first remove plug, see Fig. 1

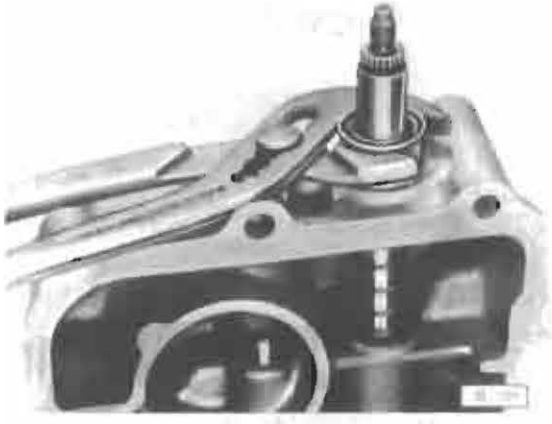

Fig. 3 **Selector shaft bushing, removing**

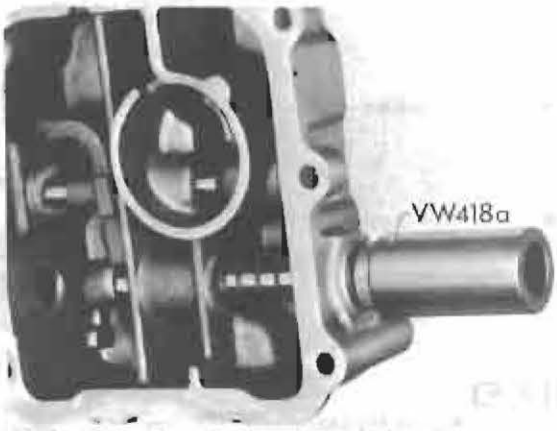

Fig. 4 **Selector shaft bushing, installing**

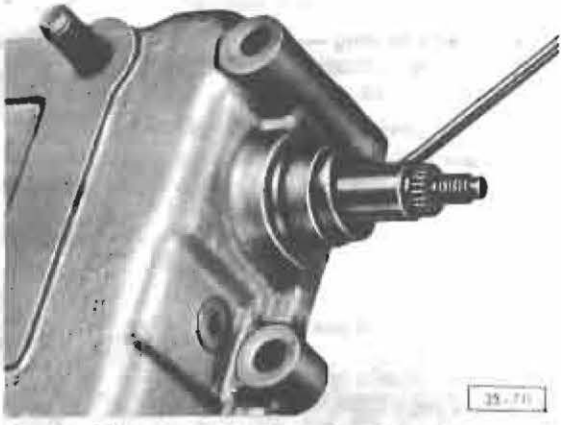

Fig. 5 **Selector shaft oil seal, removing**

— pull out with screwdriver



Fig. 6 **Selector shaft oil seal, installing**

— fill space between lips with multi-purpose grease

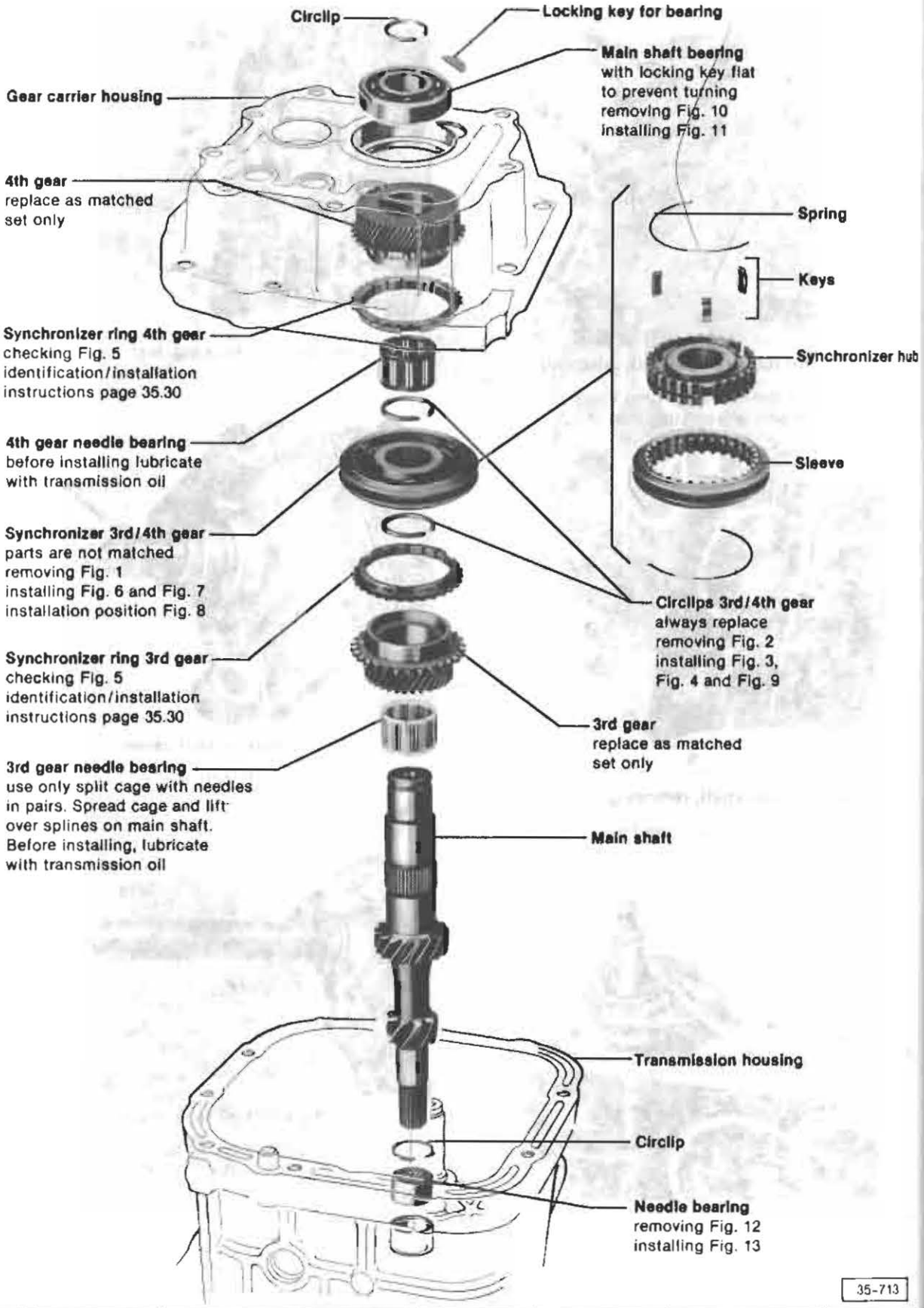
Circlip
Locking key for bearing
Main shaft bearing
with locking key flat
to prevent turning
removing Fig. 10
installing Fig. 11
Gear carrier housing
4th gear
replace as matched
set only
Spring
Keys
Synchronizer hub
Sleeve
Synchronizer ring 4th gear
checking Fig. 5
identification/installation
instructions page 35.30
4th gear needle bearing
before installing lubricate
with transmission oil
Synchronizer 3rd/4th gear
parts are not matched
removing Fig. 1
installing Fig. 6 and Fig. 7
installation position Fig. 8
Circlips 3rd/4th gear
always replace
removing Fig. 2
installing Fig. 3,
Fig. 4 and Fig. 9
Synchronizer ring 3rd gear
checking Fig. 5
identification/installation
instructions page 35.30
3rd gear
replace as matched
set only
3rd gear needle bearing
use only split cage with needles
in pairs. Spread cage and lift
over splines on main shaft.
Before installing, lubricate
with transmission oil
Main shaft
Transmission housing
Circlip
Needle bearing
removing Fig. 12
installing Fig. 13
35-713

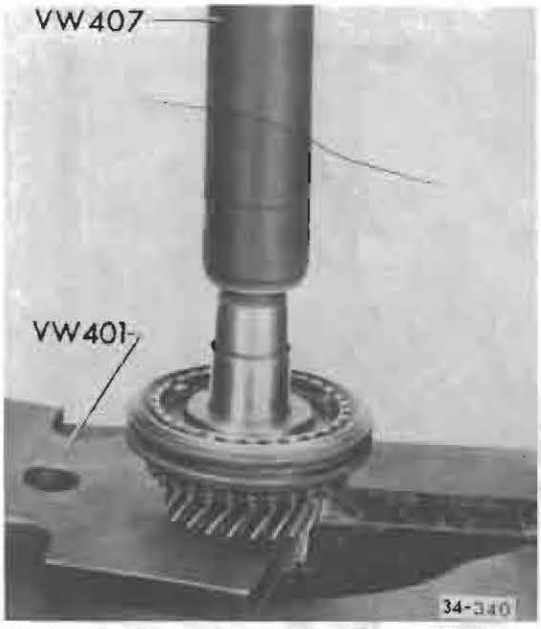

Fig. 1 **Synchronizer 3rd/4th gear, removing**

— press off together with 3rd gear

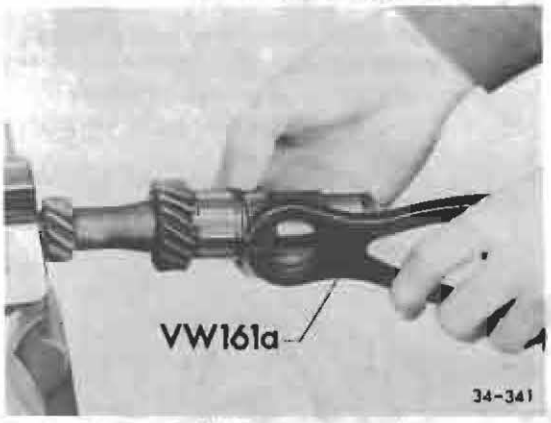

Fig. 2 **Circlips 3rd/4th gear, removing**



Fig. 3 **Circlip 3rd/4th gear, installing**

— slide sleeve over shaft until it contacts splines for hub (arrow). It may be necessary to back out knurled screw

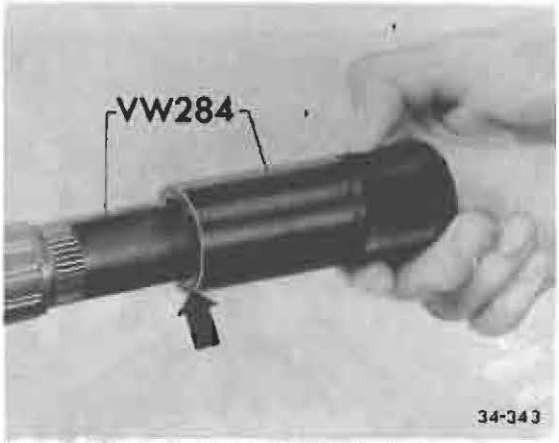

Fig. 4 **Circlip 3rd/4th gear, installing**

— place new circlip (arrow) on sleeve and push over splines with tube until circlip snaps into groove

CAUTION

Circlip must be located inside relieved part of installing tool while it is being pushed on so that it expands uniformly over complete circumference

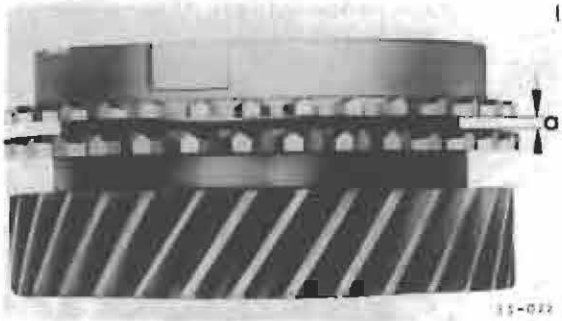

Fig. 5 **Synchronizer rings 3rd/4th gear, checking**

— press synchronizer rings onto gear by hand and measure gap a with feeler gauge

	New Part mm (in.)	Wear limit mm (in.)
Gap a	1.0–1.7 (0.039–0.067)	0.5 (0.020)

Note

Synchronizer ring identification marks and installation instructions, page 35.30



Fig. 6 Synchronizer 3rd/4th gear, assembling

- identification grooves (arrows) of sleeve and hub are on opposite sides. Groove on sleeve (white arrow) faces 4th gear
- sleeve and hub are not matched and can be replaced separately

— assemble parts at several positions before installing to determine position of smoothest operation with minimum backlash

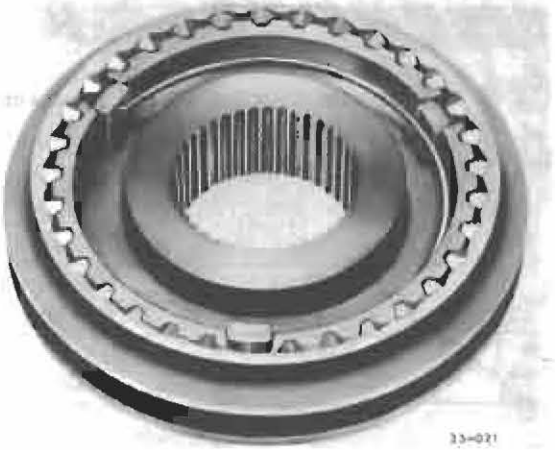

Fig. 7 Synchronizer 3rd/4th gear, assembling

— slide sleeve over synchronizer hub. Matched position is not necessary
— insert keys and install springs with ends offset 120°. Angled ends of springs must fit into keys

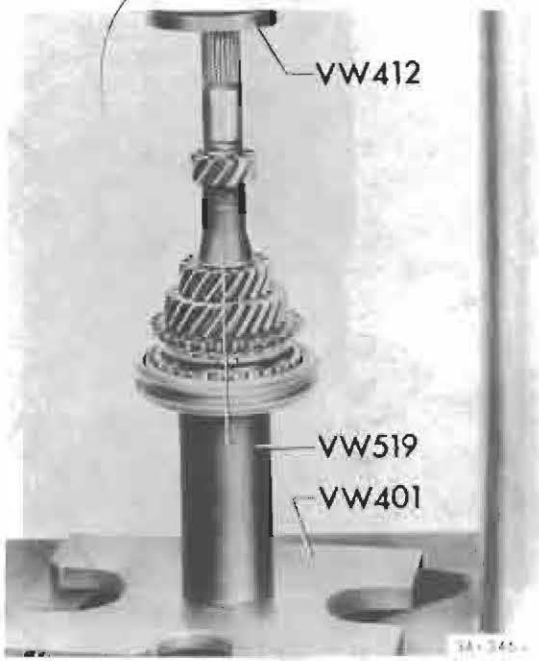

Fig. 8 Synchronizer 3rd/4th gear, installing

— turn synchronizer ring until grooves are in line with keys
- identification groove on sleeve (Fig. 6, white arrow) faces 4th gear

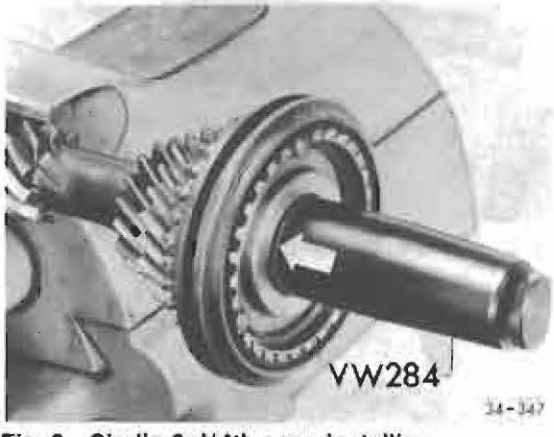

Fig. 9 Circlip 3rd/4th gear, installing

— slide sleeve over shaft and turn knurled screw in until groove (arrow) is exposed. If necessary, use M6 x 60 bolt instead of knurled screw
— push circlip on until it snaps into groove

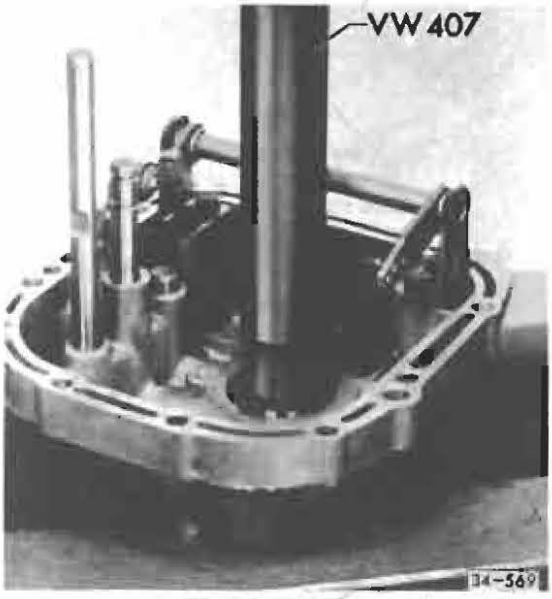

Fig. 10 **Main shaft ball bearing, removing**

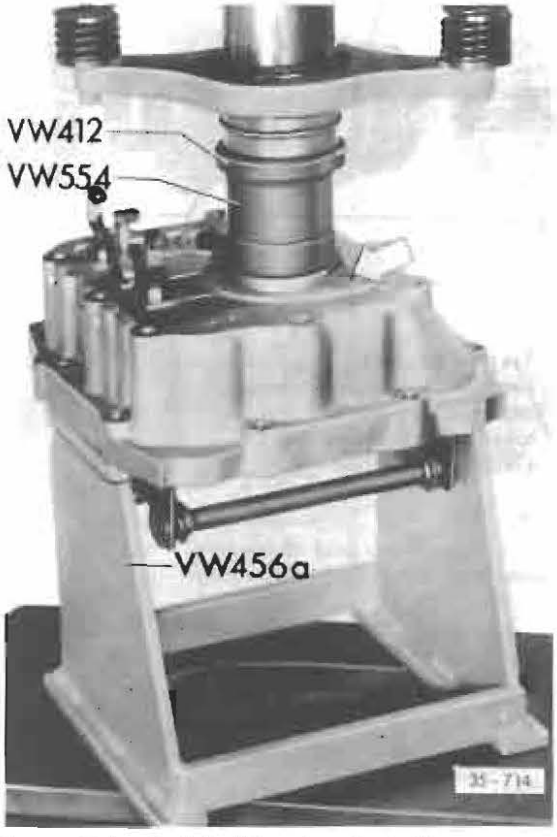

Fig. 11 **Main shaft ball bearing, installing**

— press in so that recess in bearing is aligned with recess (arrow) in housing
— install locking key to prevent bearing from turning



Fig. 12 **Pinion needle bearing in housing, removing**

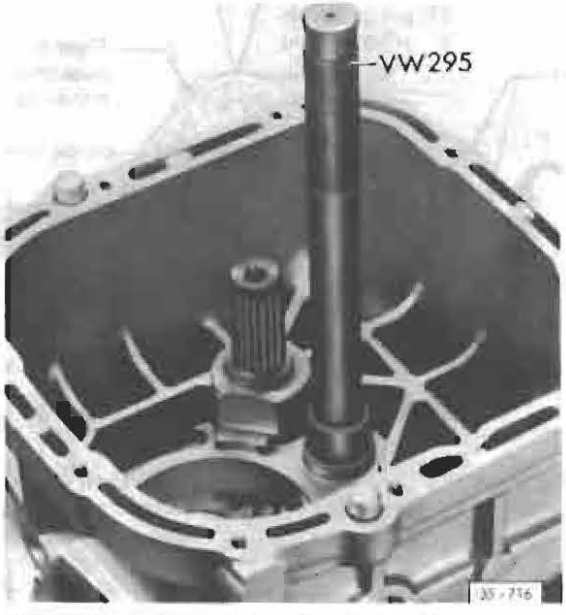

Fig. 13 **Pinion needle bearing in housing, installing**

— press in flush

CAUTION

When installing, lettered side of bearing (thicker material) must face installing tool

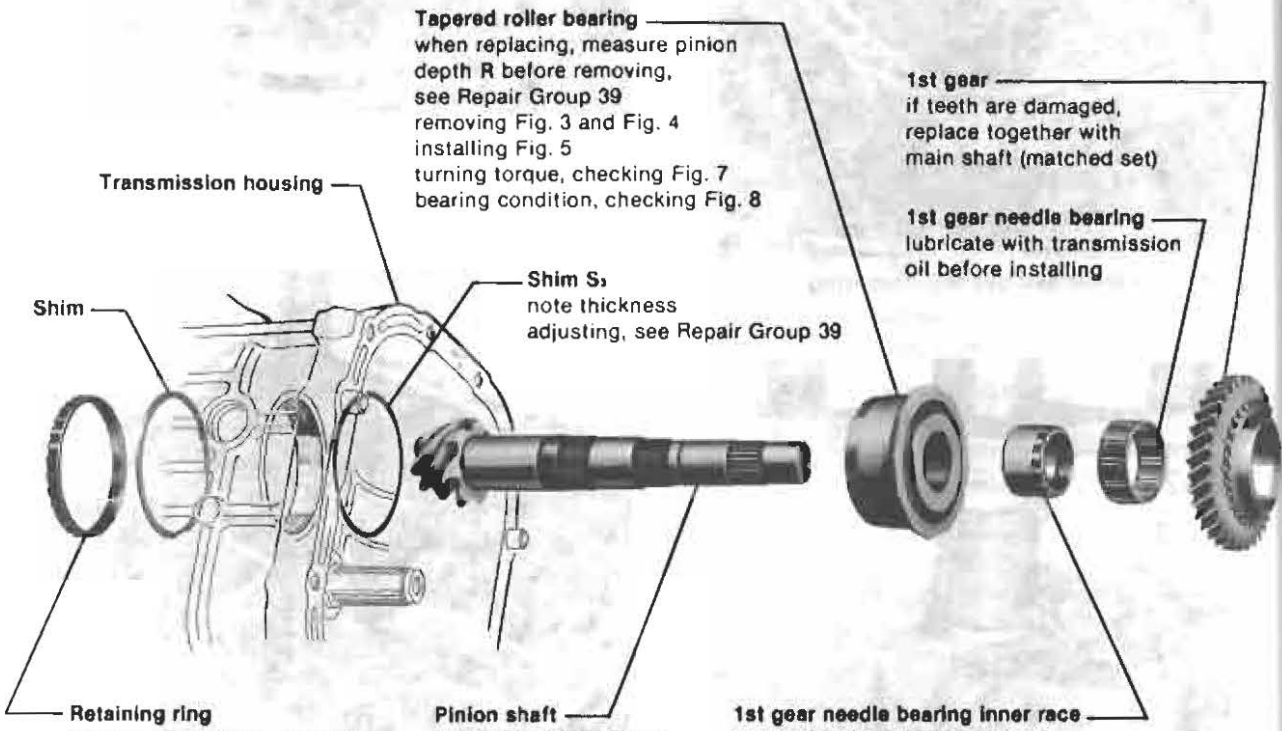
Tapered roller bearing
when replacing, measure pinion depth R before removing, see Repair Group 39
removing Fig. 3 and Fig. 4
installing Fig. 5
turning torque, checking Fig. 7
bearing condition, checking Fig. 8
1st gear
if teeth are damaged, replace together with main shaft (matched set)
Transmission housing
1st gear needle bearing
lubricate with transmission oil before installing
Shim S1
note thickness adjusting, see Repair Group 39
Shim
Retaining ring
removing/installing page 35.7
Pinion shaft
matched with ring gear, when replacing adjust ring gear/pinion, see Repair Group 39
1st gear needle bearing inner race
secured by long collar pressed onto synchronizer hub
loosening/tightening Fig. 6
installation position Fig. 12

35-717

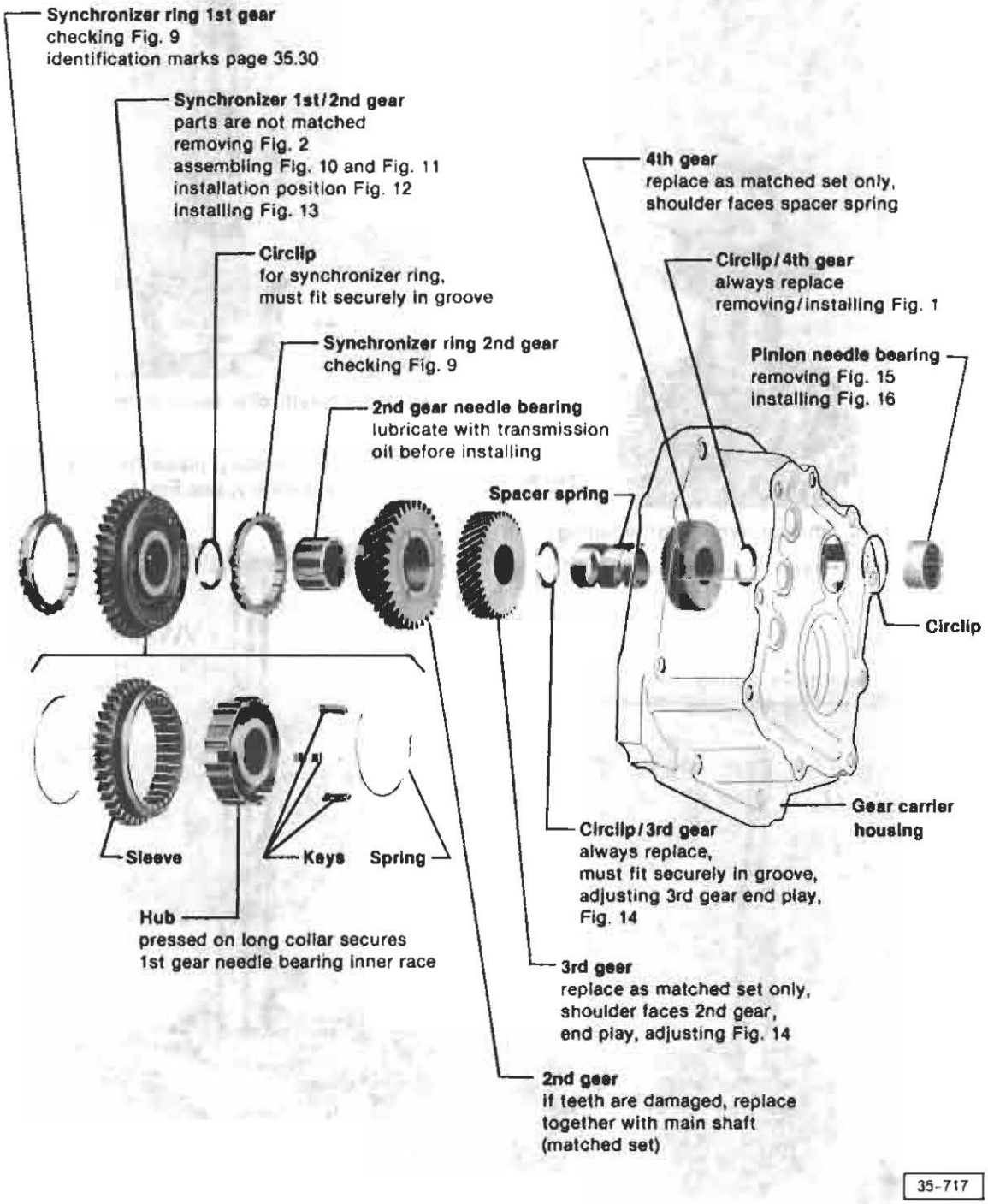
Synchronizer ring 1st gear
checking Fig. 9
identification marks page 35.30
Synchronizer 1st/2nd gear
parts are not matched
removing Fig. 2
assembling Fig. 10 and Fig. 11
installation position Fig. 12
installing Fig. 13
Circlip
for synchronizer ring,
must fit securely in groove
Synchronizer ring 2nd gear
checking Fig. 9
2nd gear needle bearing
lubricate with transmission
oil before installing
4th gear
replace as matched set only,
shoulder faces spacer spring
Circlip/4th gear
always replace
removing/installing Fig. 1
Pinion needle bearing
removing Fig. 15
installing Fig. 16
Spacer spring
Circlip
Gear carrier
housing
Sleeve
Keys
Spring
Hub
pressed on long collar secures
1st gear needle bearing inner race
Circlip/3rd gear
always replace,
must fit securely in groove,
adjusting 3rd gear end play,
Fig. 14
3rd gear
replace as matched set only,
shoulder faces 2nd gear,
end play, adjusting Fig. 14
2nd gear
if teeth are damaged, replace
together with main shaft
(matched set)
35-717

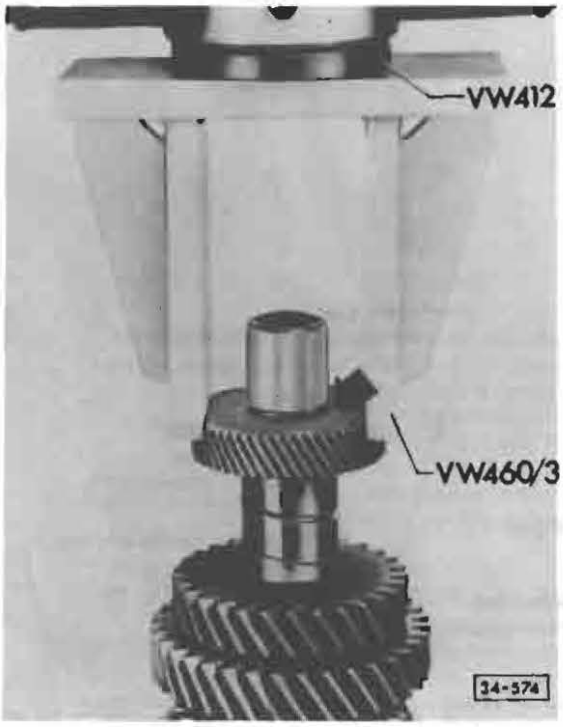

Fig. 1 Circlip/4th gear, removing/installing

- must fit securely in groove (arrow)

CAUTION

Hold 4th gear down (spring under tension)

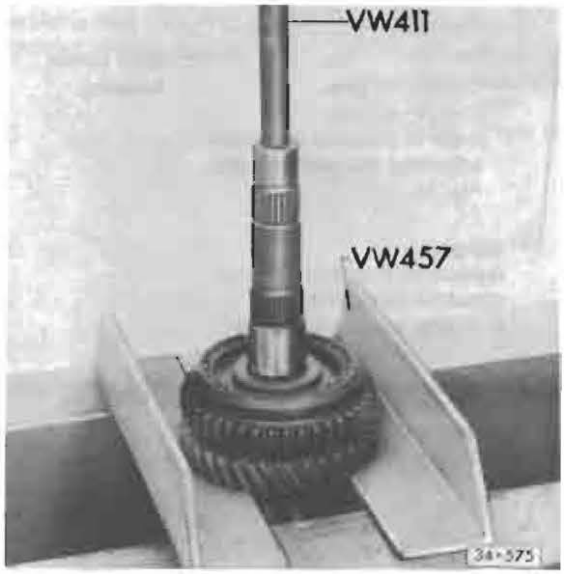

Fig. 2 Synchronizer sleeve/hub and 1st gear, removing

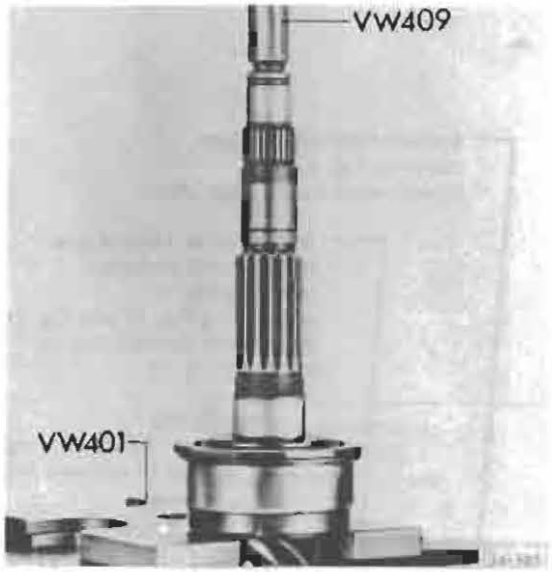

Fig. 3 Tapered roller bearing, removing

— press off by supporting outer race
— if necessary, press 2nd inner race off separately, see Fig. 4

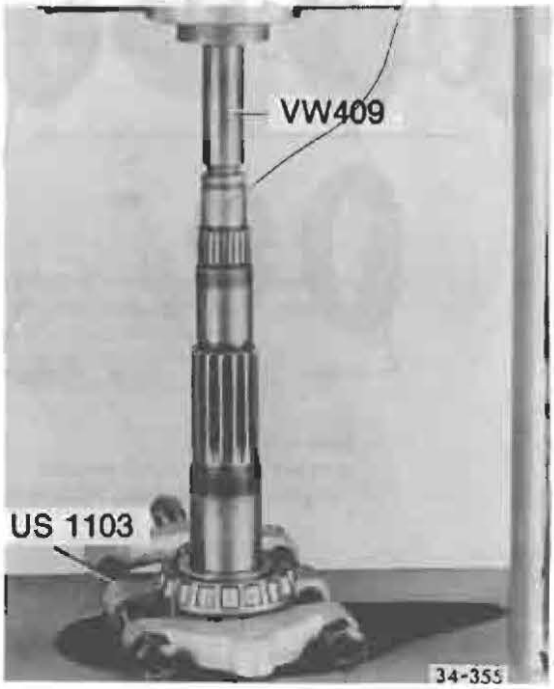

Fig. 4 Tapered roller bearing 2nd inner race, removing

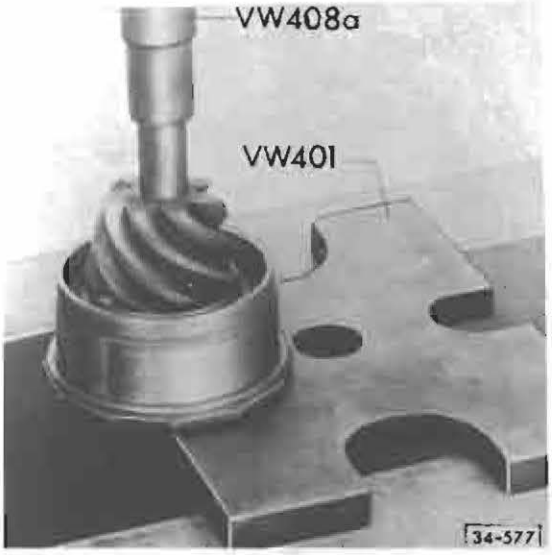

Fig. 5 **Tapered roller bearing, installing**

— heat inner races to about 100 °C (212 °F) and press on
— before tightening needle bearing inner race, let tapered roller bearing cool to room temperature

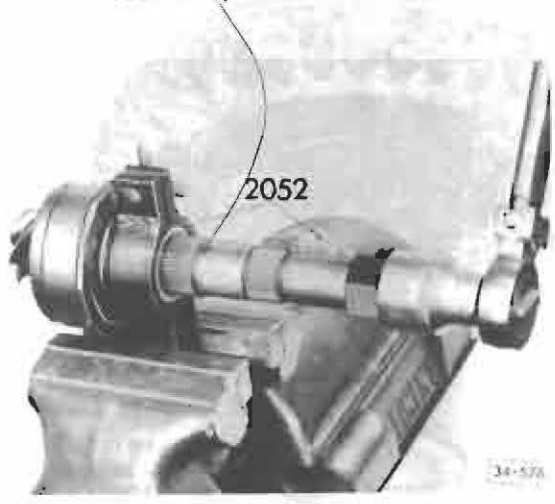

Fig. 6 **1st gear needle bearing inner race, loosening/tightening**

— heat inner race to about 60 °C (140 °F) and screw on as far as possible by hand

CAUTION

Inner race is **hot.** Do not touch with bare hand

— place pinion shaft in tool 2052 and tighten wing nut lightly
— tighten inner race to 210 Nm (152 ft lb)
— check turning torque of tapered roller bearing, see Fig. 7

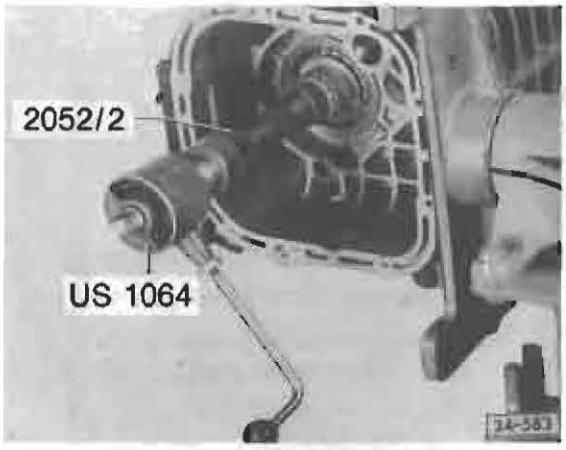

Fig. 7 **Tapered roller bearing, checking turning torque**

— lubricate bearings with transmission oil and tighten retaining ring, see page 35.7
— turn pinion shaft in both directions about 15–20 times
— turn further and read turning torque
  • new bearings:
  up to 210 Ncm (**180 in. lb**)
  • used bearings*:
  up to 70 Ncm (**61 in. lb**)
  (*after running at least 30 miles)
  • if no turning torque can be measured, see Fig. 8

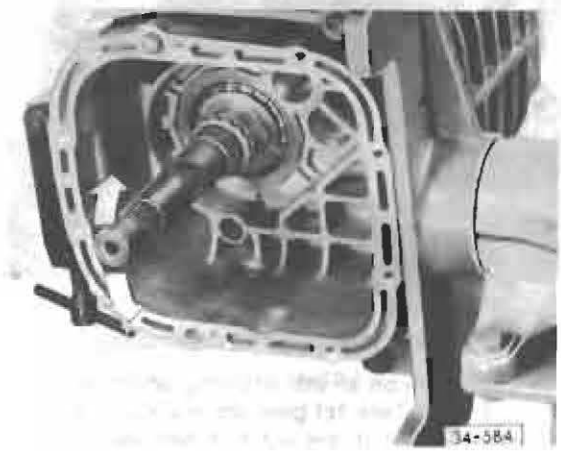

Fig. 8 **Bearing condition, checking**

— check for rock at end of pinion. There must not be any detectable movement

if **YES**, replace tapered roller bearing

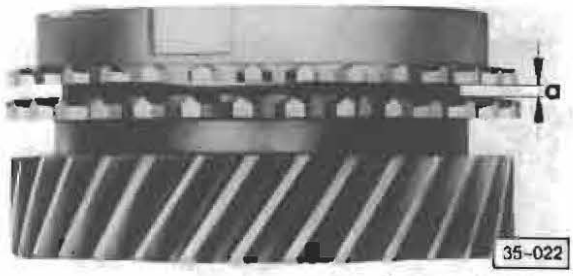

Fig. 9 Synchronizer ring 1st/2nd gear, checking

— press synchronizer rings onto gear by hand and measure gap **a** with feeler gauge

	New Part mm (in.)	Wear limit mm (in.)
Gap a	1.0–1.7 (0.039–0.067)	0.5 (0.020)

Note

Synchronizer ring identification marks and installation instructions, page 35.30

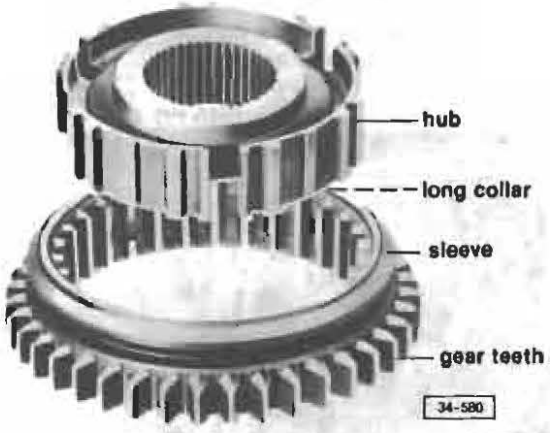

Fig. 10 Synchronizer 1st/2nd gear, assembling

- gear teeth on sleeve and long collar on hub must face 1st gear when installing
- sleeve and hub are not matched and can be replaced separately

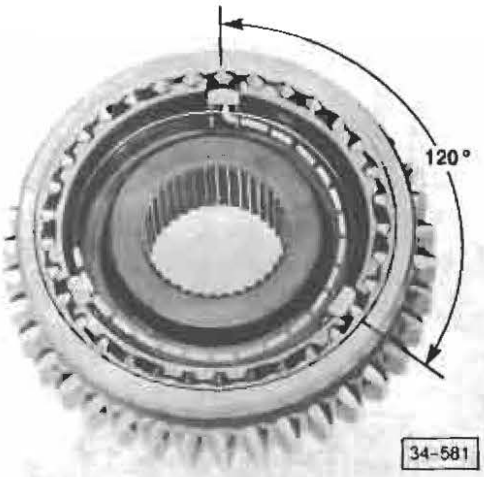

Fig. 11 Synchronizer 1st/2nd gear, assembling

— slide sleeve over sychronizer hub. Matched position is not necessary
— insert keys and install springs with ends offset 120°. Angled ends of springs must fit into keys



Fig. 12 Synchronizer assembly 1st/2nd gear and 1st gear needle bearing inner race, installation position

— position synchronizer assembly on needle bearing inner race so that old marks on long collar of synchronizer hub (from lugs on needle bearing inner race) are now opposite gaps on needle bearing inner race
- sleeve and hub are not matched and can be replaced separately

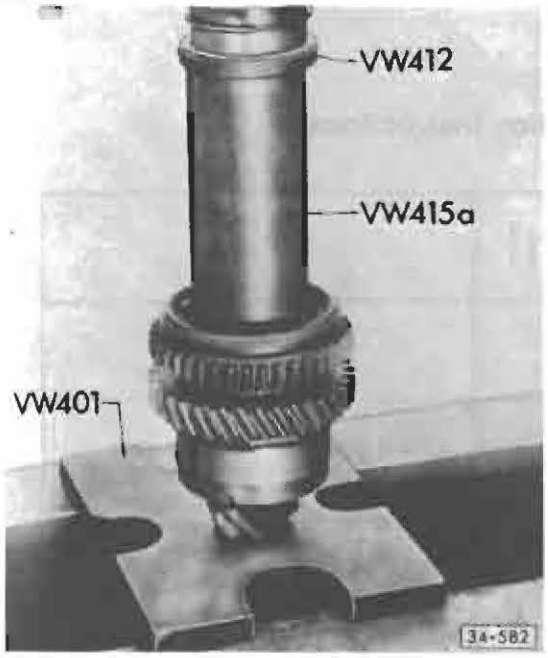

Fig. 13 Synchronizer 1st/2nd gear, installing

— turn synchronizer ring until grooves are in line with keys (installation position, see Fig. 10 and Fig. 11)

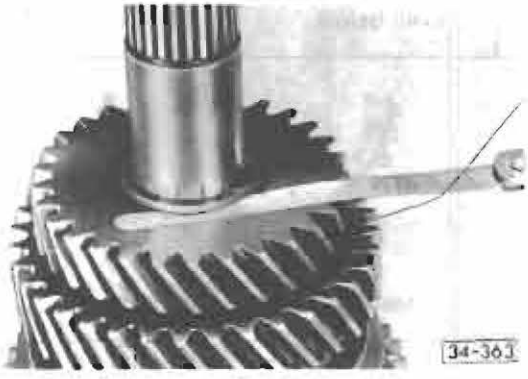

Fig. 14 3rd gear end play, adjusting

— measure end play with feeler gauge
— adjust by selecting suitable circlip
• play should be 0.05 mm-0.20 mm (try to keep lower limit)

Circlips **available:**

Thickness mm	Color	Part No.
1.60	black	113 311 382
1.75	blue	113 311 383
1.90	brown	113 311 384
2.05	gray	113 311 385
2.20	copper	113 311 386
2.30	brass	113 311 387
2.40	silver	113 311 388

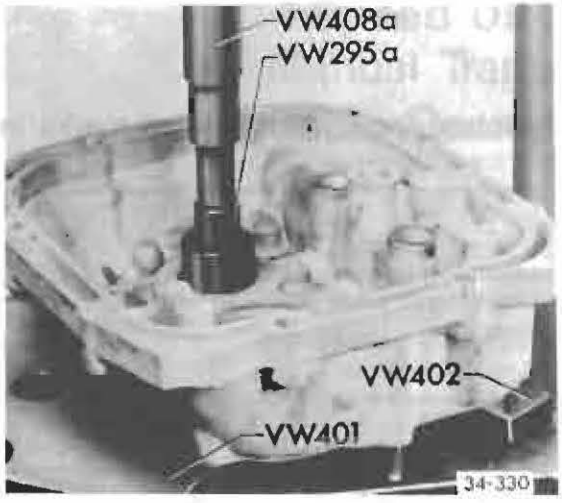

Fig. 15 Pinion needle bearing in gear carrier housing, removing

— press out without damaging circlip



Fig. 16 Pinion needle bearing in gear carrier housing, installing

— press in until seated

Synchronizer rings, identification marks/installation instructions

Note

When assembling transmission, install synchronizer ring to same gear from which it was removed

Synchronizer ring	1st gear	2nd gear	3rd gear	4th gear
markings	 without notches		 3 notches (arrow)	
production	brass ring coated with molybdenum, Part No. 091 311 247 B	brass ring coated with molybdenum	special brass ring coated with molybdenum, Part No. 091 311 295 A, shown below	brass ring
spare part	brass ring coated with molybdenum, Part No. 091 311 247 B	special brass ring coated with molybdenum, Part No. 091 311 295 A, marked as shown on right	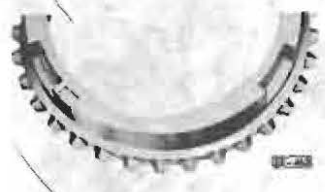 teeth all around circumference	

4-Speed 091/1 Manual Transmission Case, Gears, Shafts

Index

—Adjusting rings 35.32
  installing 35.35
  marking/removing 35.34
—Assembly 35.32, 35.33, 35.36, 35.37
  mounting in repair stand 35.34
—Clutch housing assembly 35.42
—Differential 35.35
—Drive flange 35.32
  circlip, installing 35.35
  installing 35.35
  oil seal 34.18
  removing 35.34
—Gear carrier 35.44
  assembly 35.36, 35.37
  assembling 35.40, 35.41
  cover 35.44
  installing 35.39
  removing 35.38
—Gear ratios 35.60
—Gears
  1st/2nd, removing 35.56
  3rd,
  end play 35.59
  installing 35.59
  removing 35.56
—Gearshift lever 34.6
—Gearshift linkage 34.6, 34.7
—Installing 34.17
—Lever bearing plate 34.6
—Lubricant specifications 35.60
—Main shaft 35.49
  assembly 35.48, 35.49
  ball bearing 35.51
  lock ring 35.52
  needle bearing 35.51
  oil seal 35.43
  rear, removing/installing 35.35a
—Pinion shaft 35.55
  assembly 35.54, 35.55
  needle bearings 35.57, 35.59
  roller bearings 35.56, 35.57
—Removing 34.16, 34.17
—Retaining ring 35.37
  installing 35.40
  removing 35.38
—Selector shaft
  modifications 35.60a
  parts for 35.60d
—Shift forks/synchronizers
  modifications 35.60b–35.60c
  parts for 35.60d
—Shift shaft oil seal 35.46
—Shift rod bushing 35.46
—Starter bushing 35.43
—Synchronizers
  1st/2nd gear 35.58
  3rd/4th gear 35,50, 35.51
  ring indentification 35.52
—Transmission, housing 35.45
  assembling 35.39
  disassembling 35.38, 35.39

4-Speed 091
— See page 35.1

5-Speed 094
— See page 35.61

094-4WD Syncro
— See page 35.93

35 Manual Transmission–Case, Gears, Shafts

Transmission/Final drive lubricant:
Hypoid oil API/GL-4; MIL-L2105
SAE 80W, SAE 80W/90
Capacities:
Vehicles with gasoline engines 3.0 L (3.2 US qt)
Vehicles with Diesel engines 4.0 L (4.2 US qt)

Note
To reduce shifting effort, transmission oil capacity has been reduced. For production reasons, the oil filler hole remains at the same location
Oil should only be poured into a level approximately 15 mm (9/16 in) below filler hole.

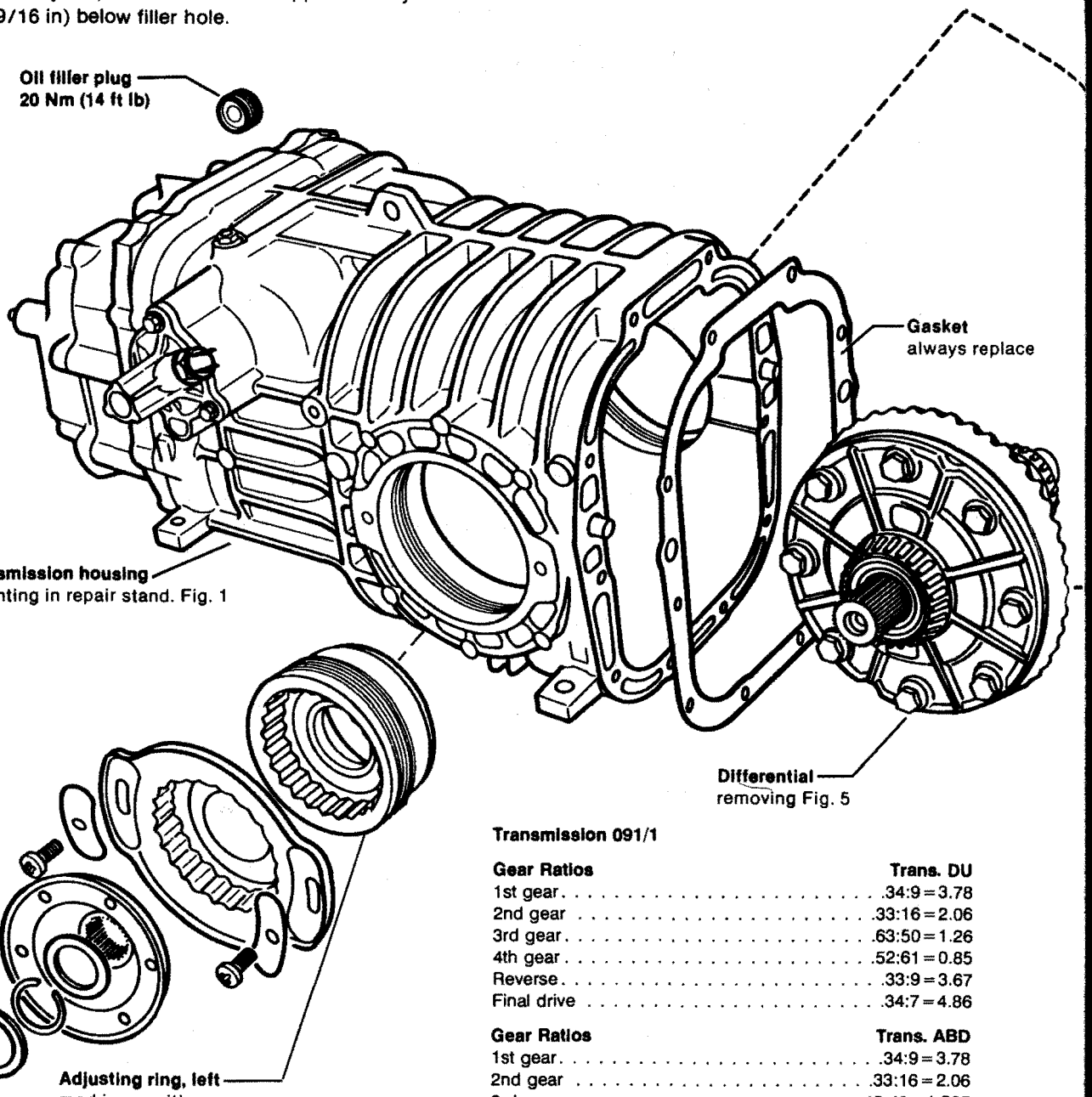

Transmission 091/1

Gear Ratios	Trans. DU
1st gear	.34:9 = 3.78
2nd gear	.33:16 = 2.06
3rd gear	.63:50 = 1.26
4th gear	.52:61 = 0.85
Reverse	.33:9 = 3.67
Final drive	.34:7 = 4.86

Gear Ratios	Trans. ABD
1st gear	.34:9 = 3.78
2nd gear	.33:16 = 2.06
3rd gear	.49:40 = 1.225
4th gear	.41:48 = 0.85
Reverse	.33.9 = 3.67
Final drive	.29:6 = 4.83

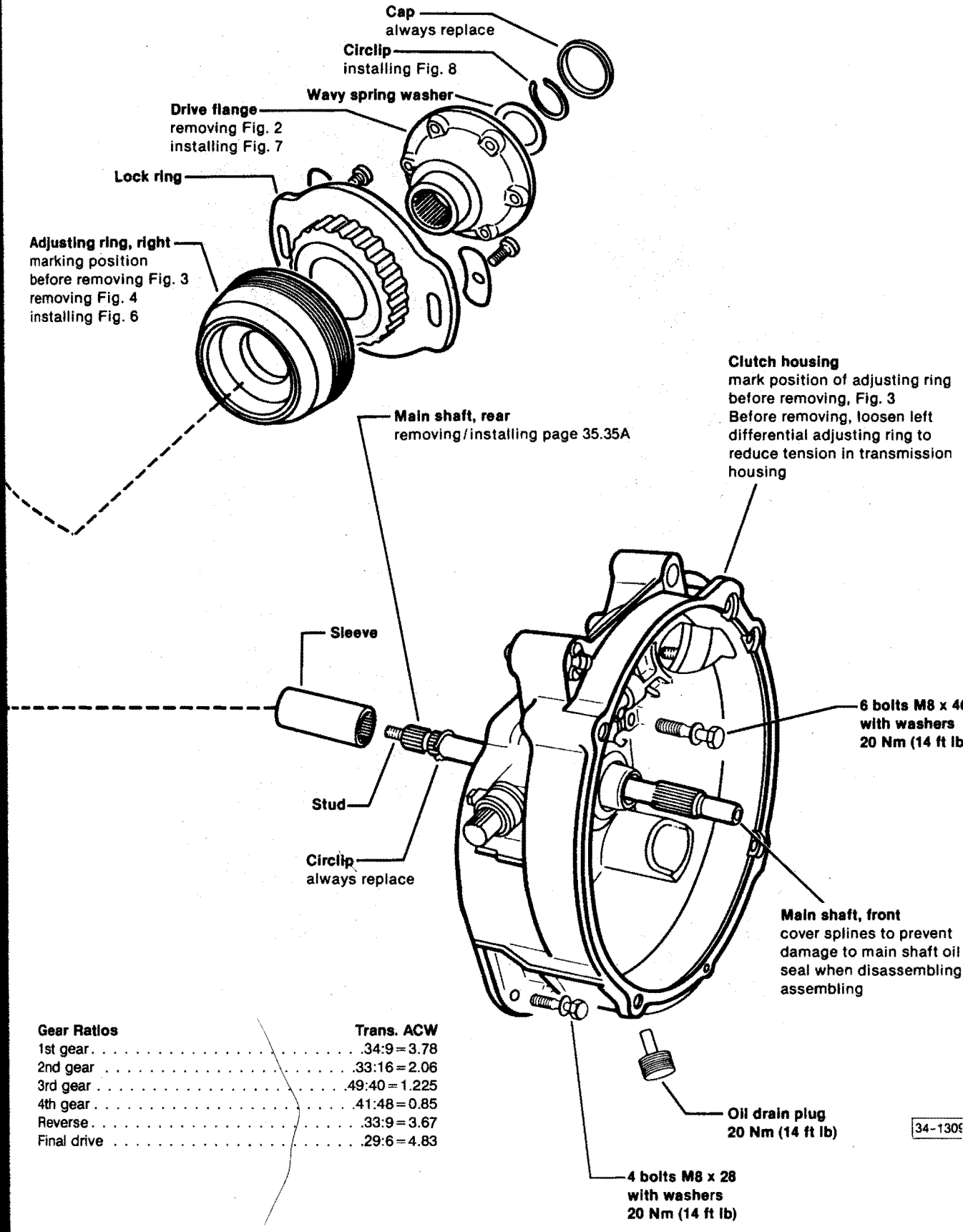

Gear Ratios	Trans. ACW
1st gear	34:9 = 3.78
2nd gear	33:16 = 2.06
3rd gear	49:40 = 1.225
4th gear	41:48 = 0.85
Reverse	33:9 = 3.67
Final drive	29:6 = 4.83

34-1309

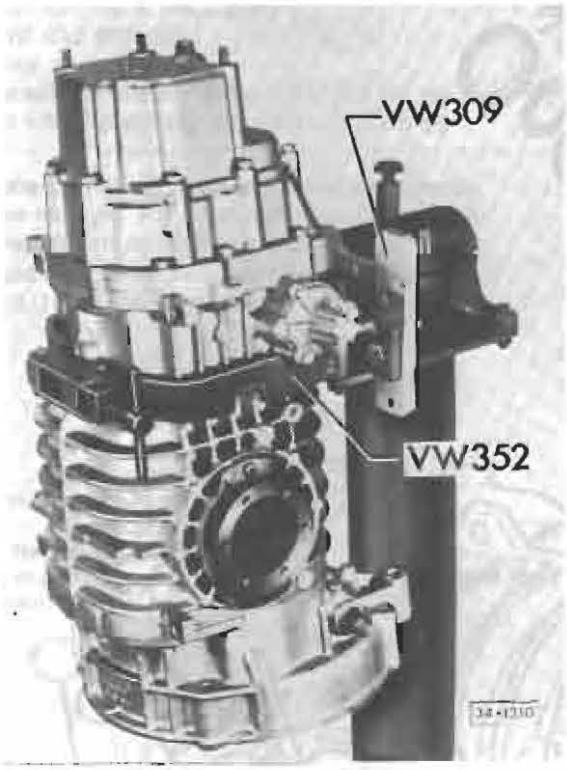

Fig. 1 Transmission assembly, mounting in repair stand

—drain transmission oil
—mount transmission in repair stand

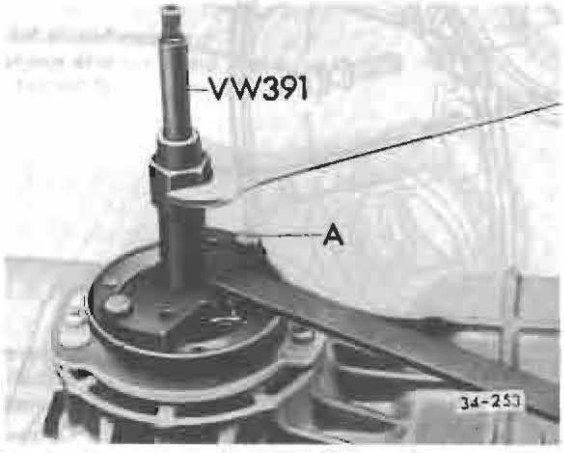

Fig. 2 Drive flange, removing

—remove circlip and wavy spring washer
—attach VW391 to flange with 2 bolts
• A = M8 x 30 bolts
—pull drive flange out



Fig. 3 Adjusting ring, marking position

Note

Before starting repair work (which does not require final drive to be adjusted) mark position of adjusting rings on transmission housing. Measure depth to which they are installed with VW 382/7 and write down readings

—scribe left side (ring gear side) with one mark (arrow)
—scribe right side with two marks

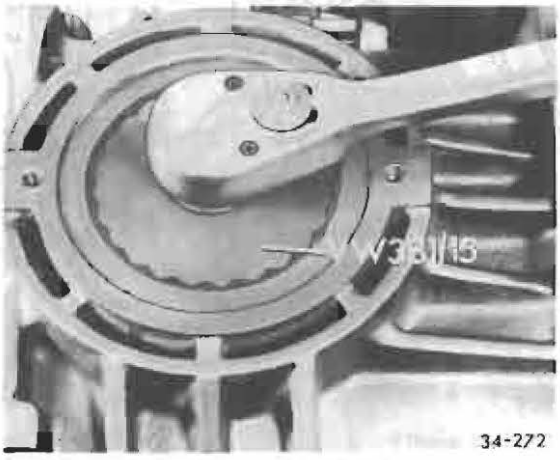

Fig. 4 Adjusting rings, removing



Fig. 5 **Differential, removing**

—remove adjusting rings and rear main shaft
—lift out differential

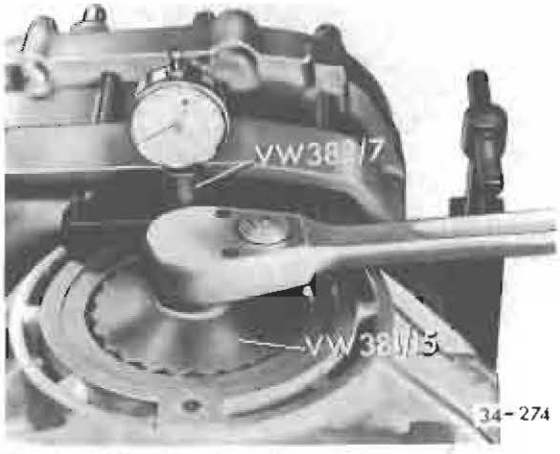

Fig. 6 **Adjusting rings, installing**

—install left and right adjusting rings and align marks at depth previously measured
—lubricate threads with MoS_2 grease

CAUTION

Do not tighten left side adjusting ring until clutch housing has been installed and bolts torqued

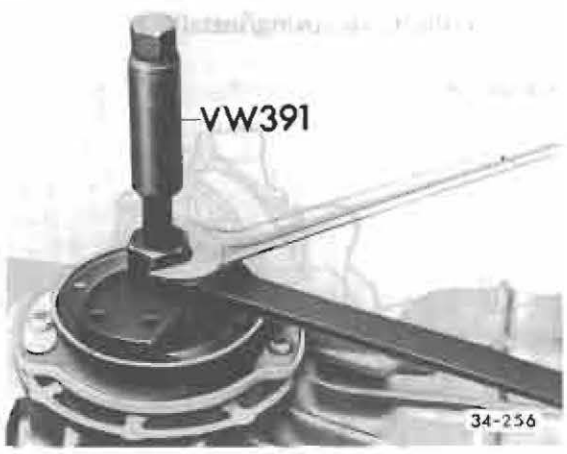

Fig. 7 **Drive flange, installing**



Fig. 8 **Circlip for drive flange, installing**

—insert wavy spring washer and circlip
—press circlip into groove with VW 244b and at same time check that washer is centered

Rear main shaft, removing/installing

Work sequence

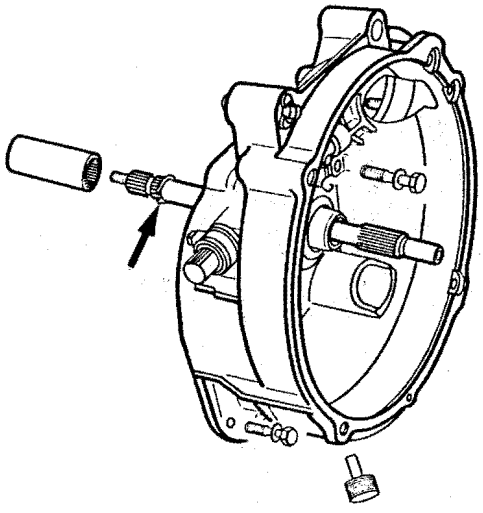

34-1309 A

Removing

- remove circlip (arrow)
- push sleeve backward and screw out main shaft

Installing

- screw front and rear main shafts together, then back off one spline
- push sleeve on and install new circlip

Note

Differential must be removed
before gear carrier can be removed,
see page 35.35

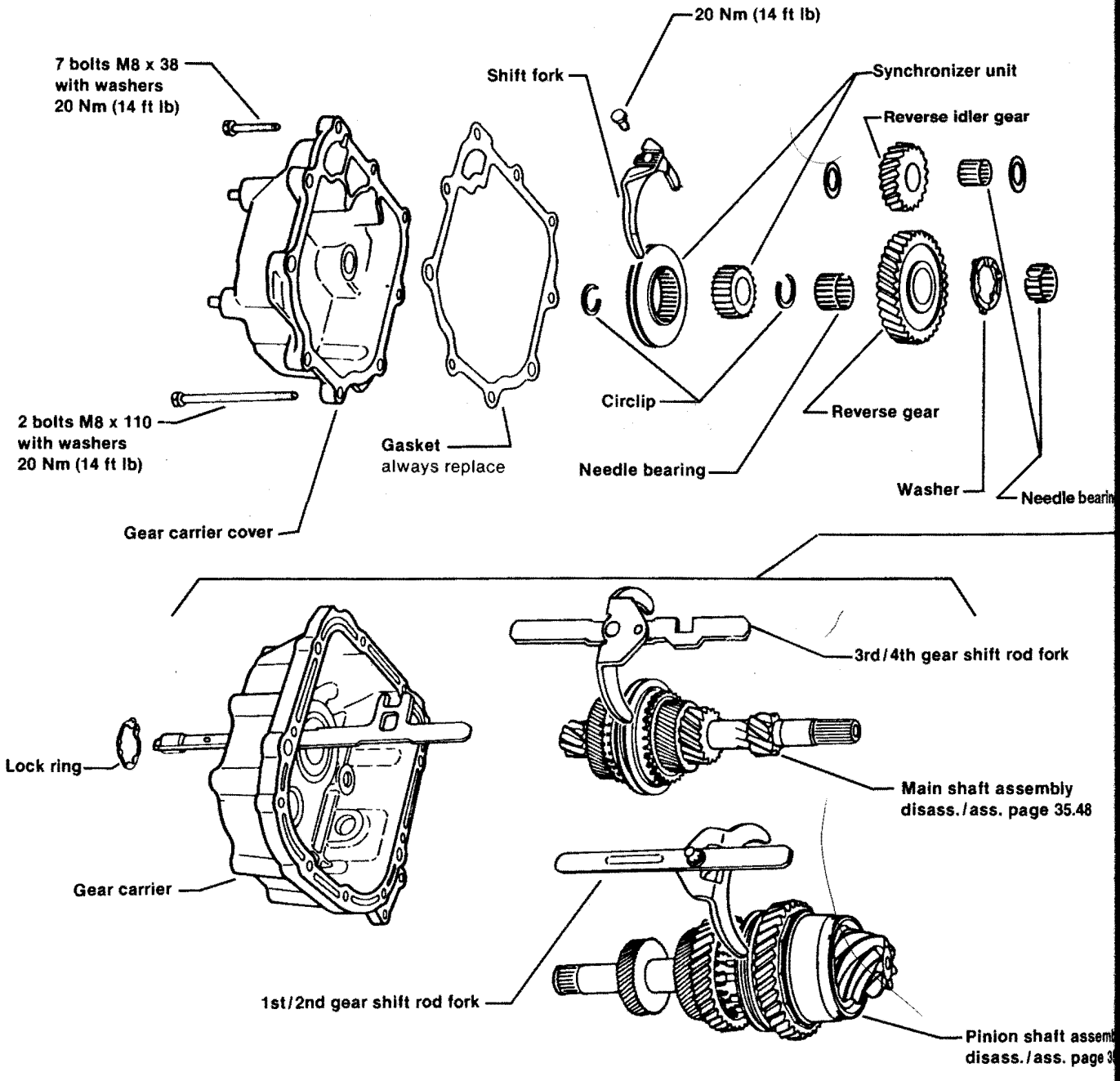

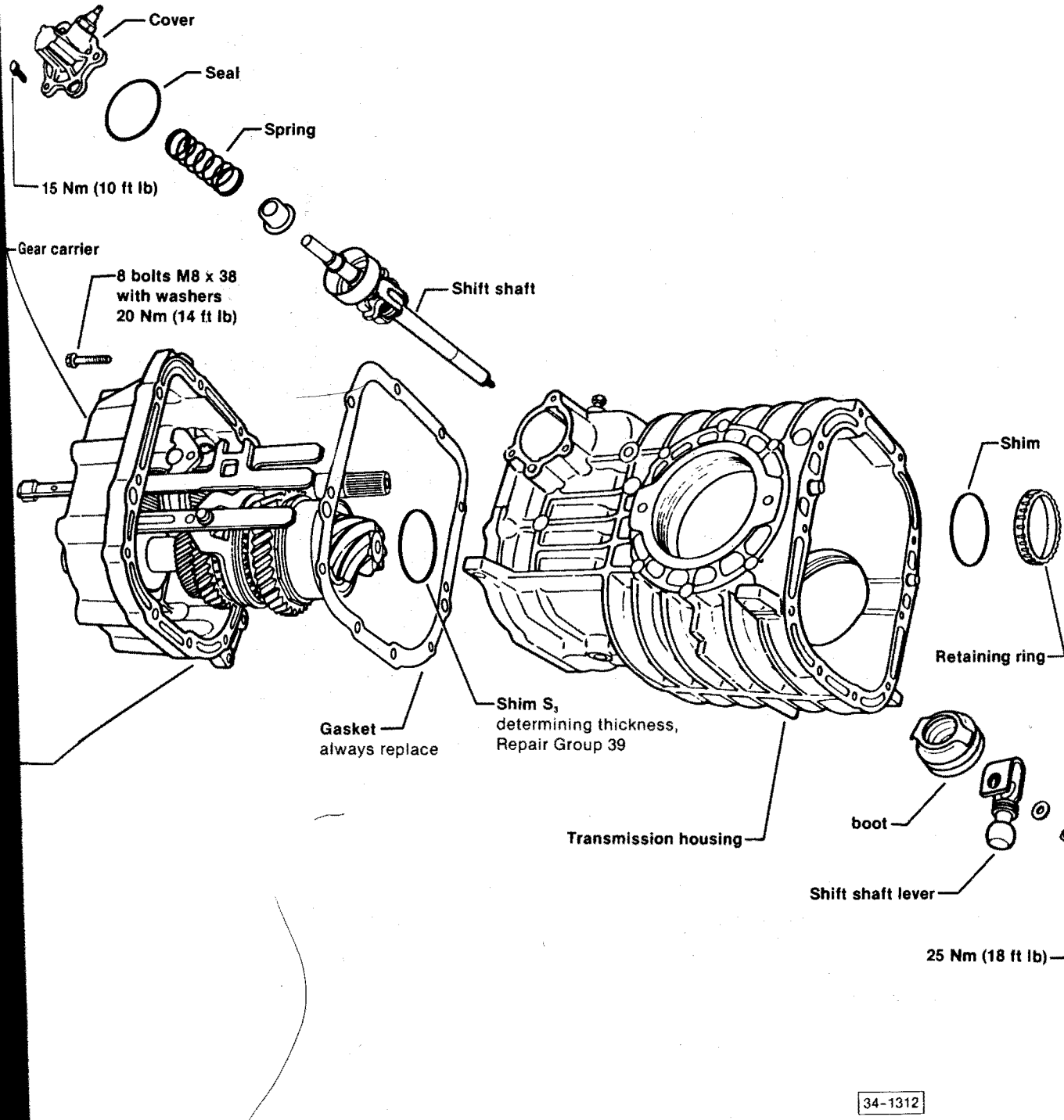
Cover
Seal
Spring
15 Nm (10 ft lb)
Gear carrier
8 bolts M8 x 38
with washers
20 Nm (14 ft lb)
Shift shaft
Shim
Retaining ring
Gasket
always replace
Shim S3
determining thickness,
Repair Group 39
boot
Transmission housing
Shift shaft lever
25 Nm (18 ft lb)
34-1312

Transmission
Disassembling

Work sequence

—remove coverplate
—remove shift shaft

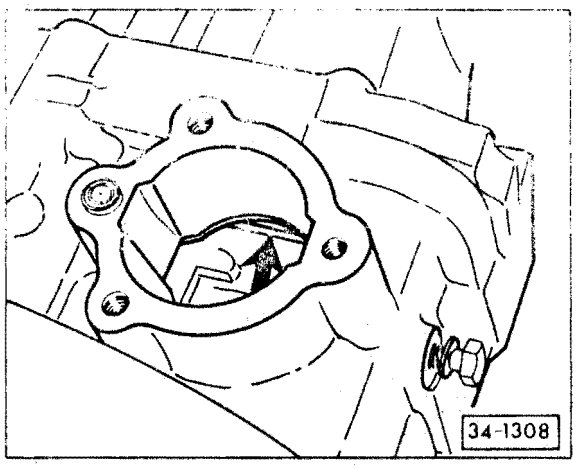

—loosen bolt until relay lever (arrow) can be pulled against housing
—tighten bolt to lock lever in that position

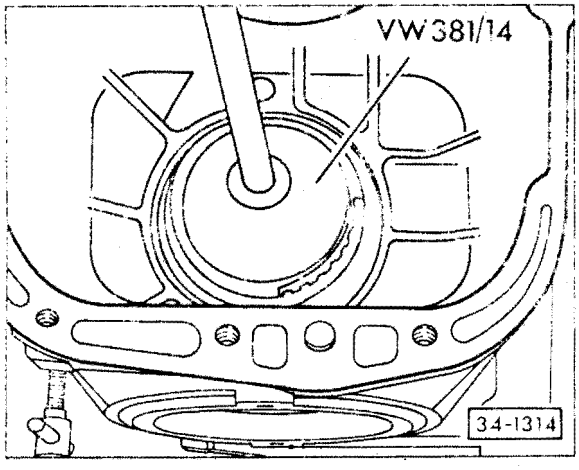

— remove retaining ring
— remove gear shift housing
— remove reverse gear shift fork and hub
— remove outer circlip

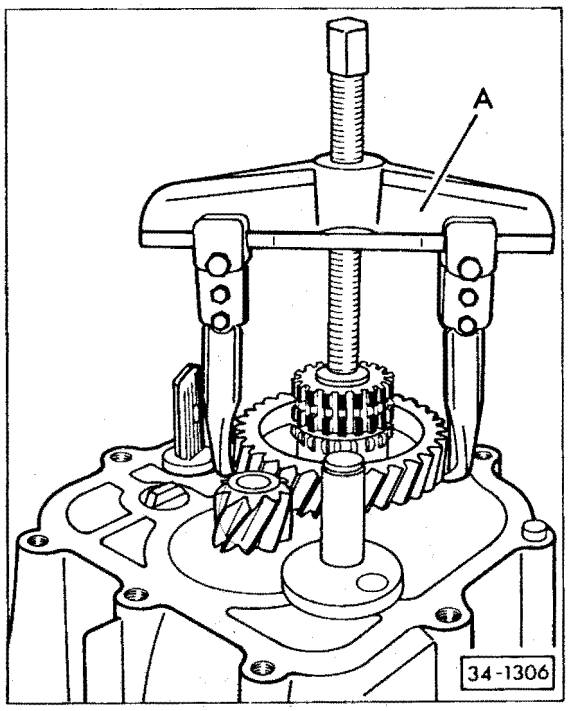

—pull off synchronizer hub and reverse gear
A—Puller US 1078
—remove inner circlip, washer and needle bearing
—remove reverse gear together with needle bearing and washer
—remove gear carrier housing bolts

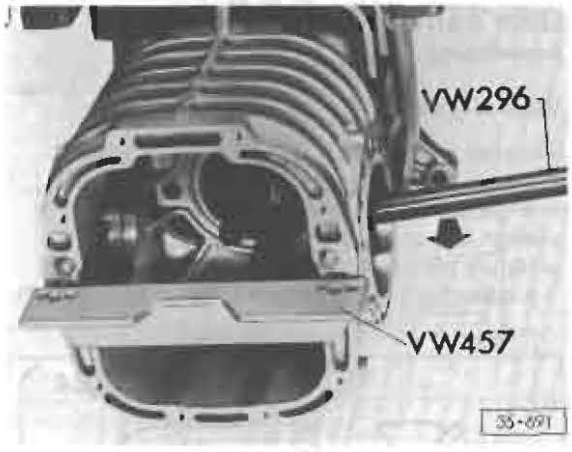

—to remove gear carrier attach VW 457 with two M8 x 20 bolts
—press gear carrier out with VW 296
—remove shim S_3 and note thickness

Note

If bearing and/or transmission housing are replaced, and dimension r is not marked on ring gear, pinion depth must be measured and noted **before** gear carrier is removed. This is dimension r. See Repair Group 39. When assembling, parts must be installed in same position. See Ring gear/pinion, adjusting, Repair Group 39

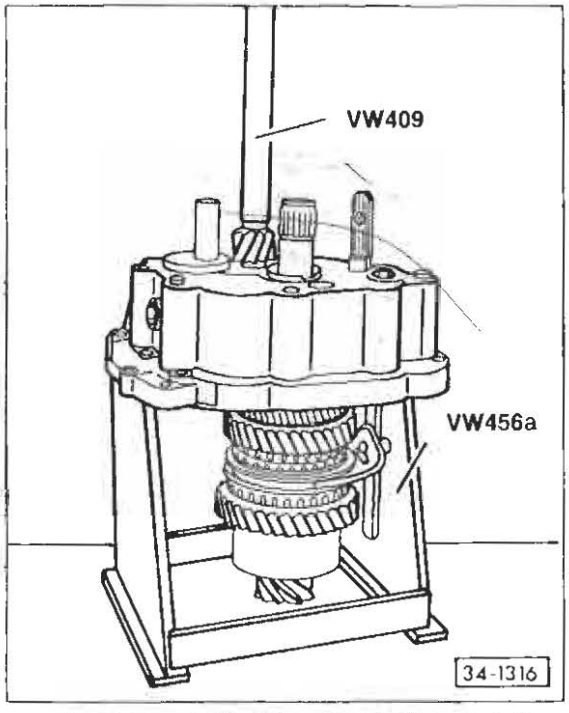

—press pinion shaft with main shaft and shift rod out of gear carrier

Assembling

Work sequence

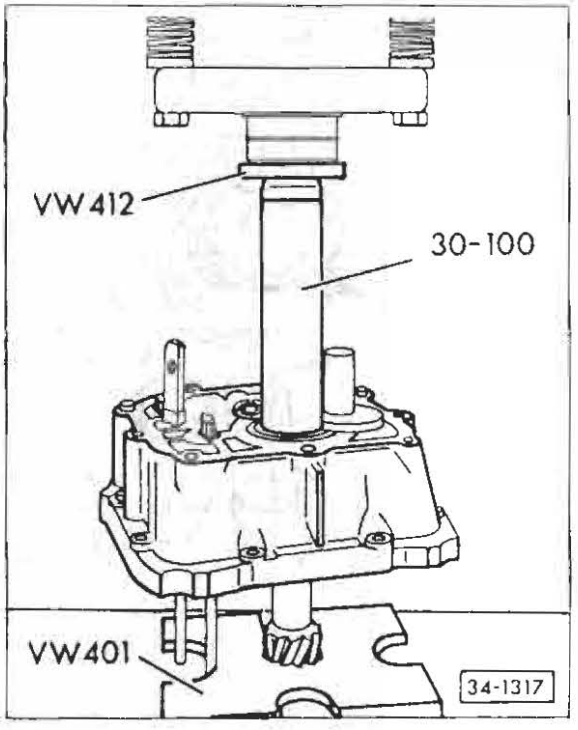

—press main shaft with shift rod into gear carrier

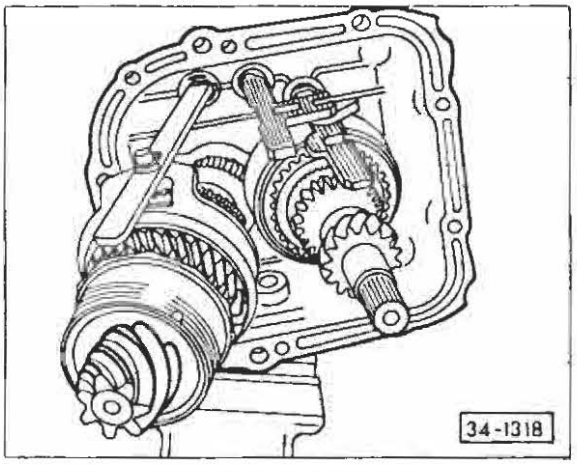

—install pinion shaft with shift rod
• shift into 3rd gear
—shift into neutral
—install pinion shaft needle bearing

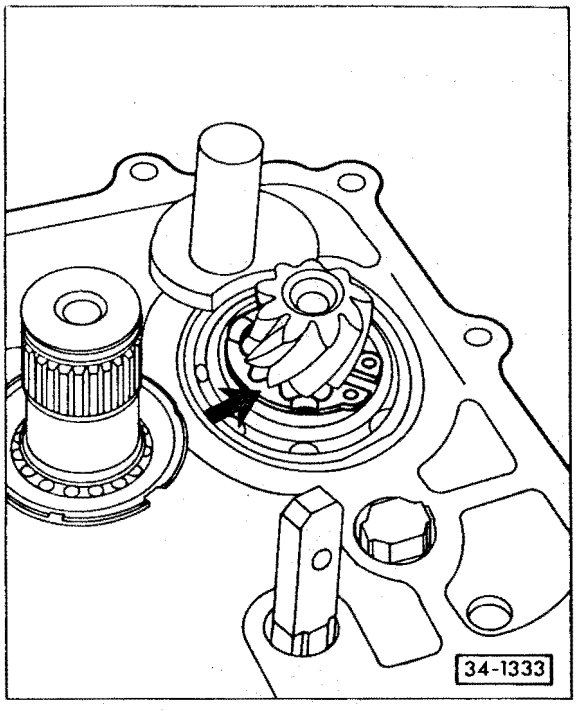

—install circlip
- make sure lugs of circlip are below teeth of pinion head (arrow)

Gear carrier
Assembling

Work sequence

—install shim S_3
—install new gasket
—align shift rod
—align flat on piston with recess in housing
—tap on pinion with plastic hammer to install
- make sure teeth of gears match properly

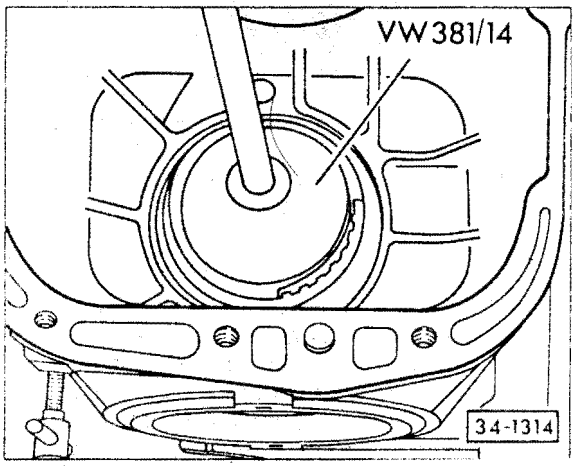

—install retaining ring and tighten to 225 Nm (162 ft lb), then loosen and retighten to 225 Nm (162 ft lb)

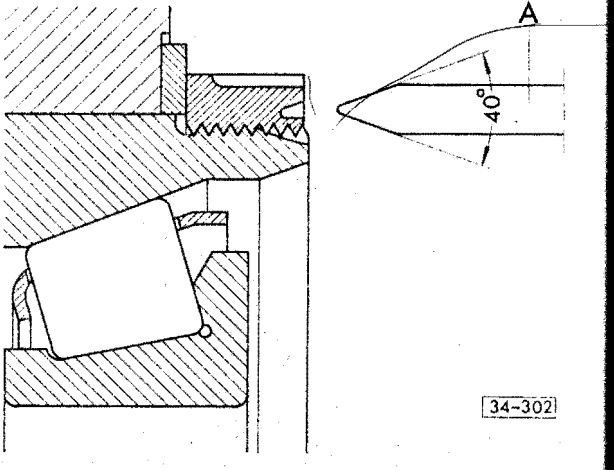

—peen retaining ring twice with suitable tool **A** (local manufacture)
—attach gear carrier to transmission housing and tighten bolts to 20 Nm (14 ft lb)

determining thickness of spacer for reverse gear

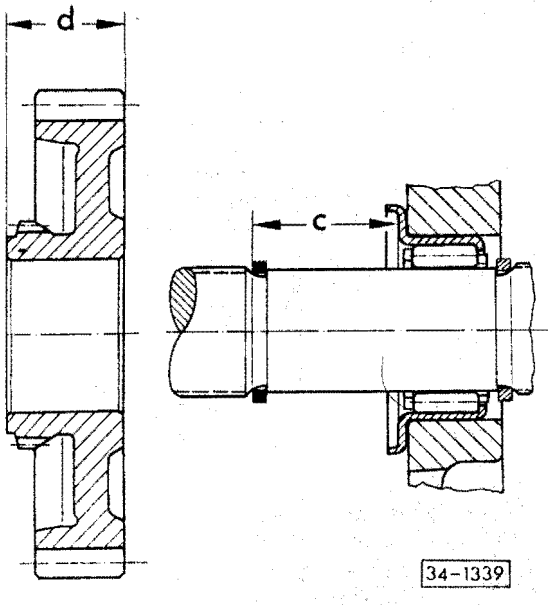

—install circlip
—measure distance **C**

Example

measurement **c**	29.1 mm
measurement **d**	– 24.7 mm
thickness of spacer	4.4 mm

thickness of spacers available

gap to be adjusted (mm)	Spare part no.	color
3.97–4.19	091 311 379	white
4.20–4.39	091 311 379 A	black
4.40–4.59	091 311 379 B	green
4.60–4.90	091 311 379 C	red

—install selected spacer, reverse gear, needle bearing and circlip

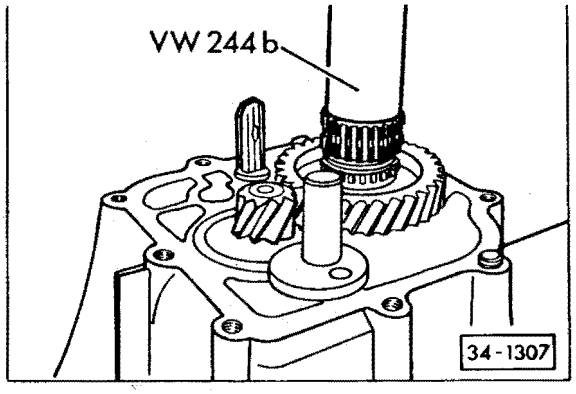

—install synchronizer
—install circlip
—install reverse gear
• groove in gear must face cover
—install needle bearing and washers
—install shift rod/fork bolt and tighten to 20 Nm (14 ft lb)
• before installing coat thread of bolt with D6-locking compound
—install new gasket
—install cover
• align shaft and bore in cover
—tighten bolts to 20 Nm (14 ft lb)
—install shift shaft
• slotted side toward differential housing
—install new gasket
—install spring
—install cover and tighten bolts to 15 Nm (10 ft lb)
—install back-up light switch
—install shift shaft lever

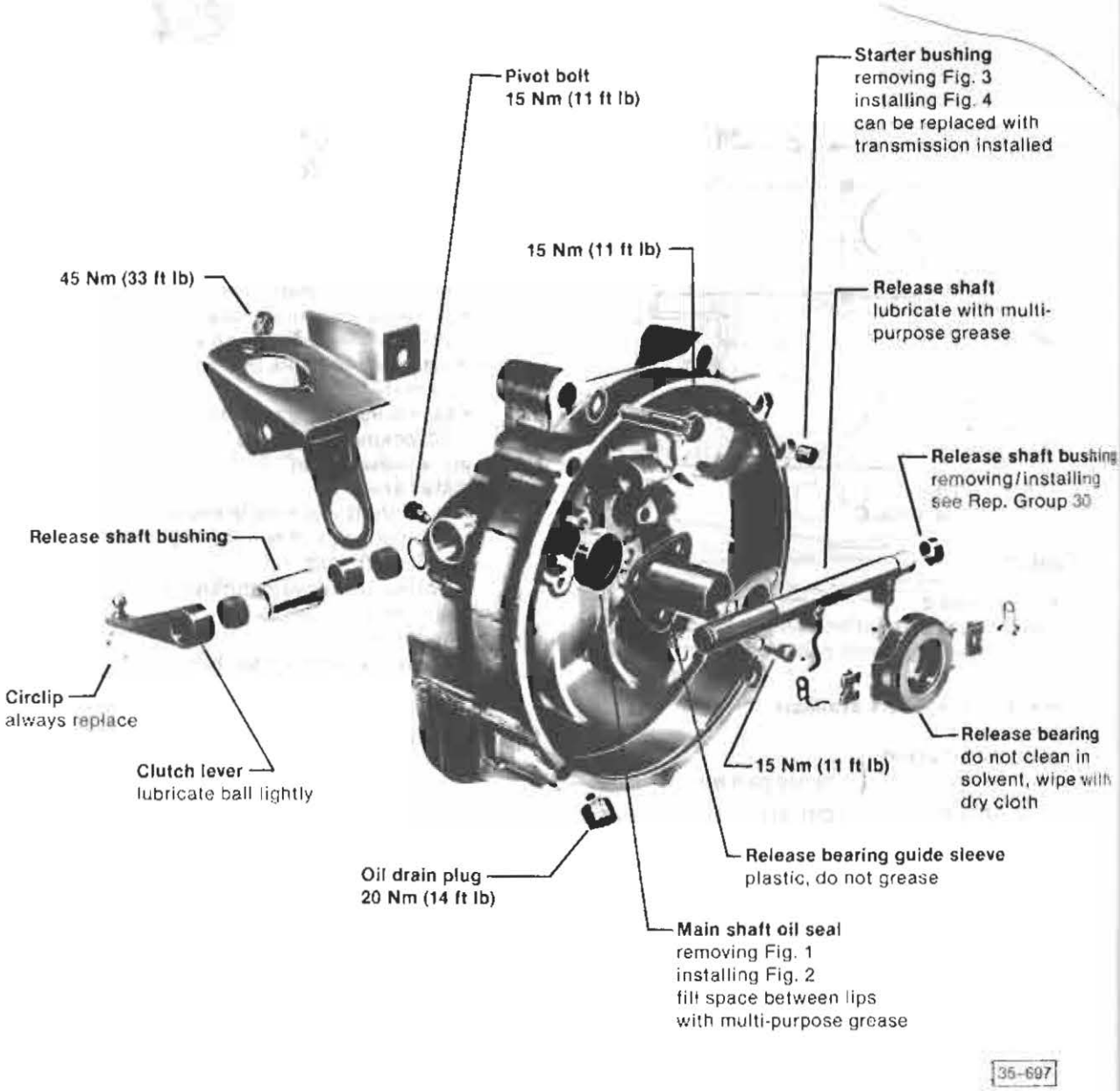
Pivot bolt
15 Nm (11 ft lb)
Starter bushing
removing Fig. 3
installing Fig. 4
can be replaced with
transmission installed
15 Nm (11 ft lb)
45 Nm (33 ft lb)
Release shaft
lubricate with multi-
purpose grease
Release shaft bushing
removing/installing
see Rep. Group 30
Release shaft bushing
Circlip
always replace
Clutch lever
lubricate ball lightly
15 Nm (11 ft lb)
Release bearing
do not clean in
solvent, wipe with
dry cloth
Release bearing guide sleeve
plastic, do not grease
Oil drain plug
20 Nm (14 ft lb)
Main shaft oil seal
removing Fig. 1
installing Fig. 2
fill space between lips
with multi-purpose grease
35-697

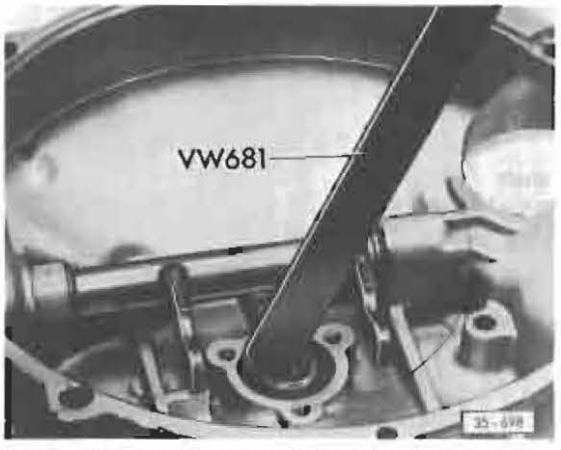

Fig. 1 Main shaft oil seal, removing

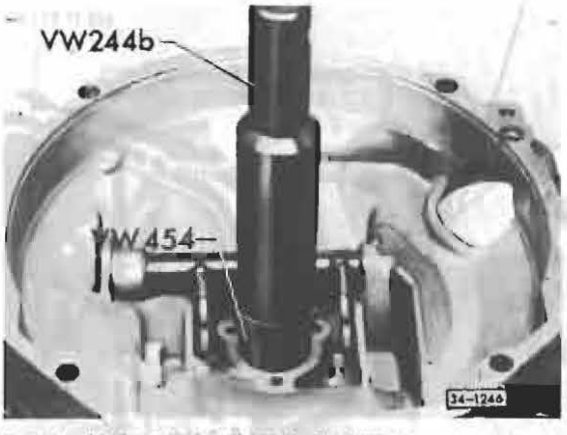

Fig. 2 Main shaft oil seal, installing

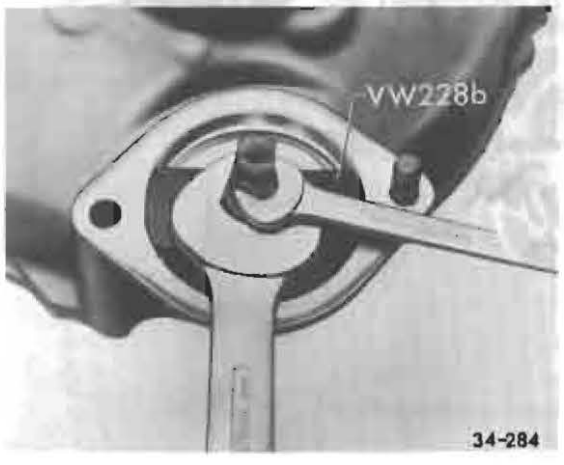

Fig. 3 Starter bushing, removing (transmission installed)

- when transmission is removed, use drift VW 222a

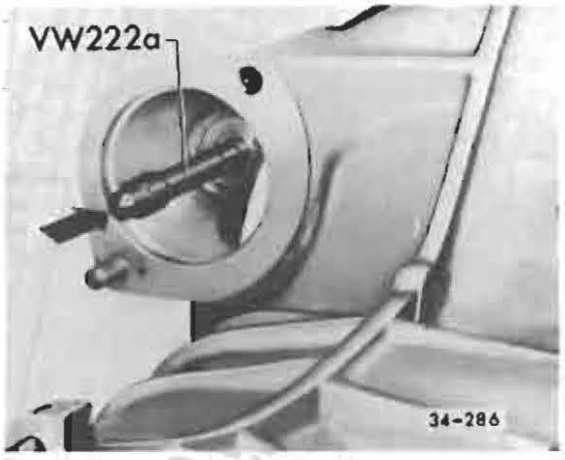

Fig. 4 Starter bushing, installing

—lubricate bushing and drive in flush

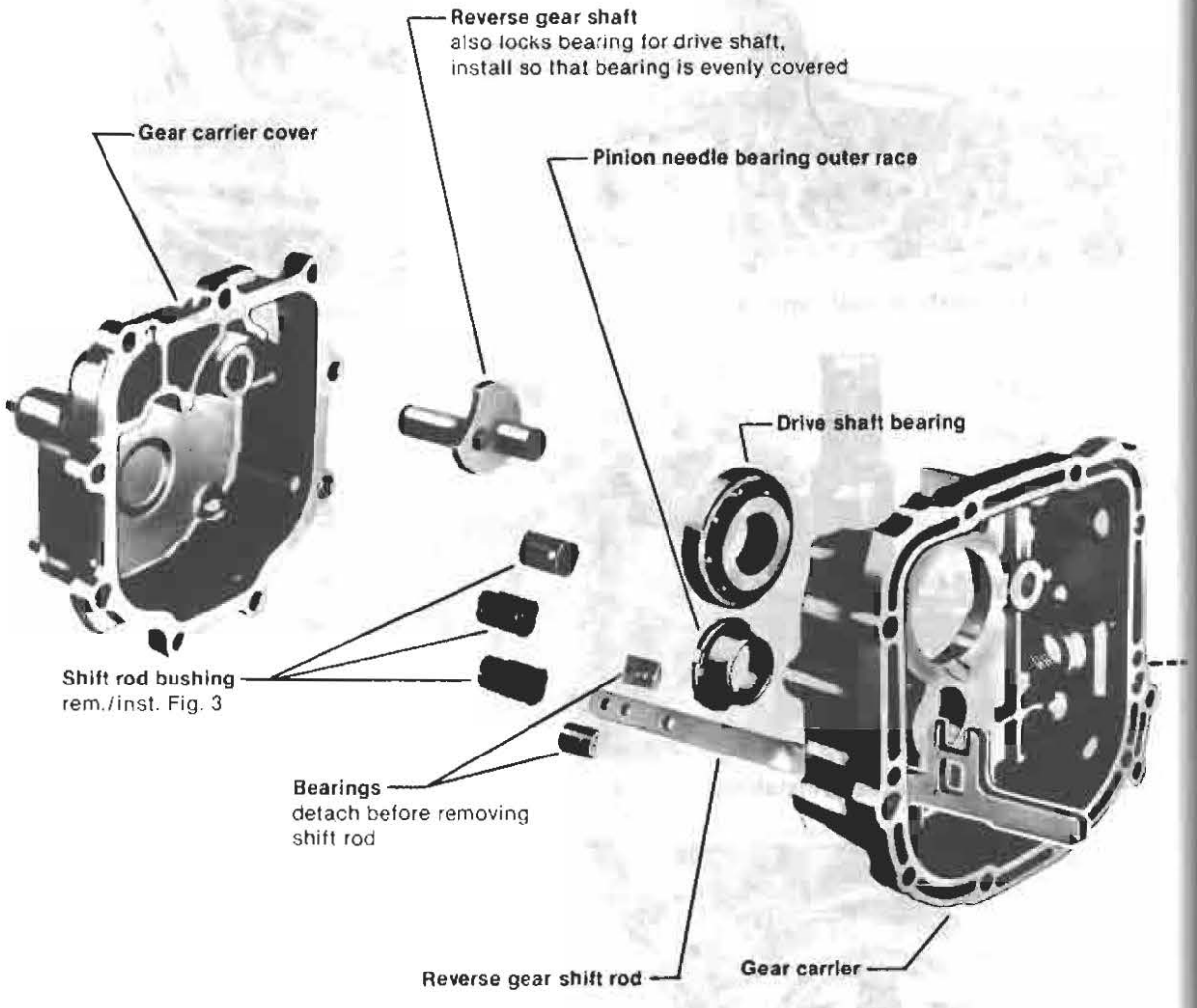
Reverse gear shaft
also locks bearing for drive shaft,
install so that bearing is evenly covered
Gear carrier cover
Pinion needle bearing outer race
Drive shaft bearing
Shift rod bushing
rem./inst. Fig. 3
Bearings
detach before removing
shift rod
Reverse gear shift rod
Gear carrier

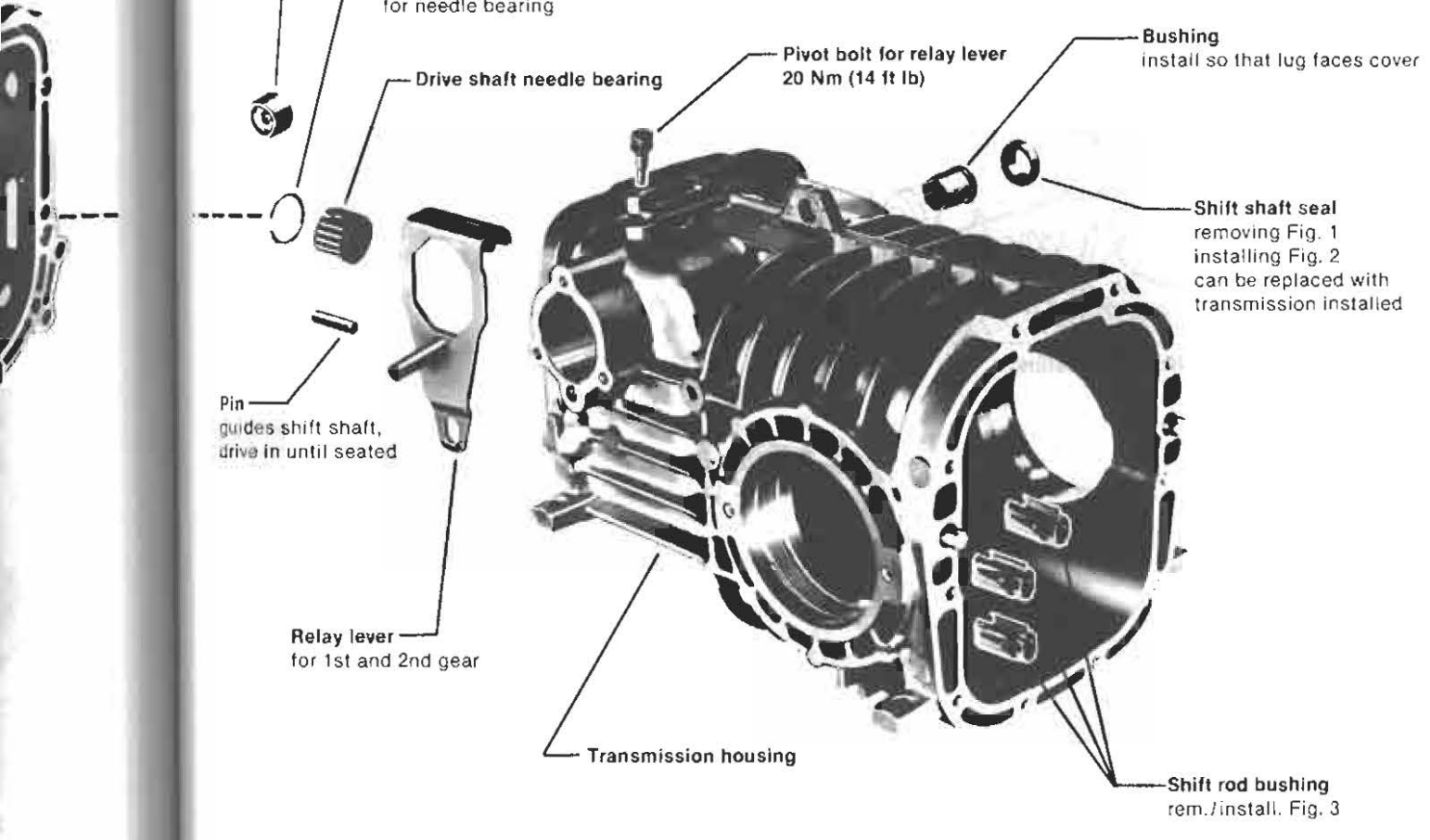
Oil filler plug
20 Nm (14 ft lb)
Circlip
for needle bearing
Drive shaft needle bearing
Pivot bolt for relay lever
20 Nm (14 ft lb)
Bushing
install so that lug faces cover
Shift shaft seal
removing Fig. 1
installing Fig. 2
can be replaced with
transmission installed
Pin
guides shift shaft,
drive in until seated
Relay lever
for 1st and 2nd gear
Transmission housing
Shift rod bushing
rem./install. Fig. 3
34-1319

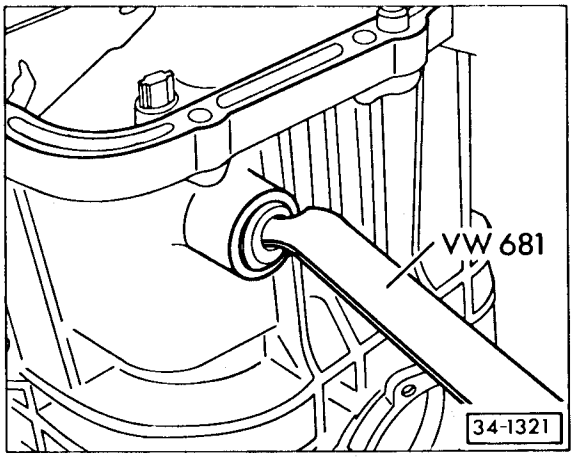

Fig. 1 Shift shaft oil seal, removing

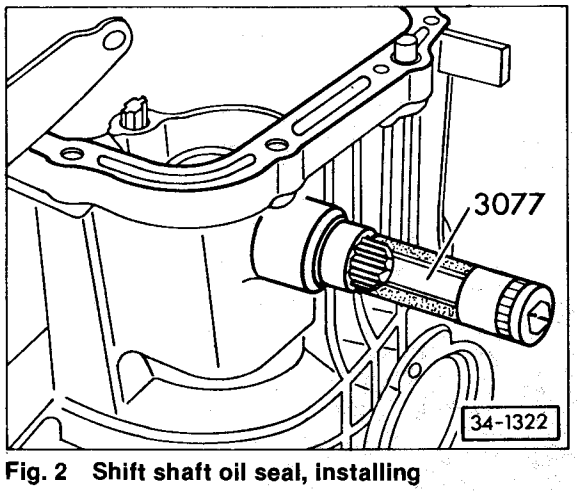

Fig. 2 Shift shaft oil seal, installing

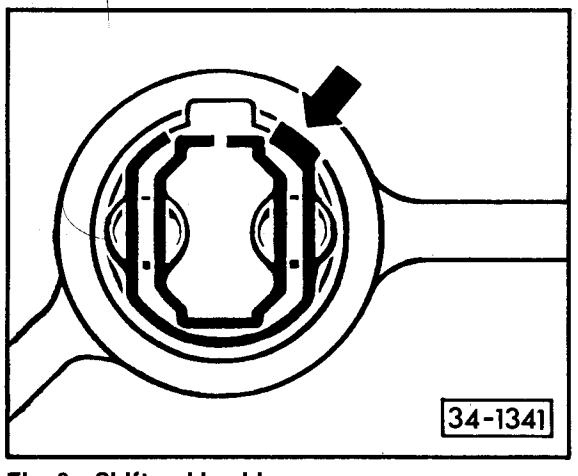

Fig. 3 Shift rod bushing

—removing
- turn bushing so that lug (arrow) is in recess of housing and press out

—installing
- align bushing and rod

THIS PAGE INTENTIONALLY
LEFT BLANK

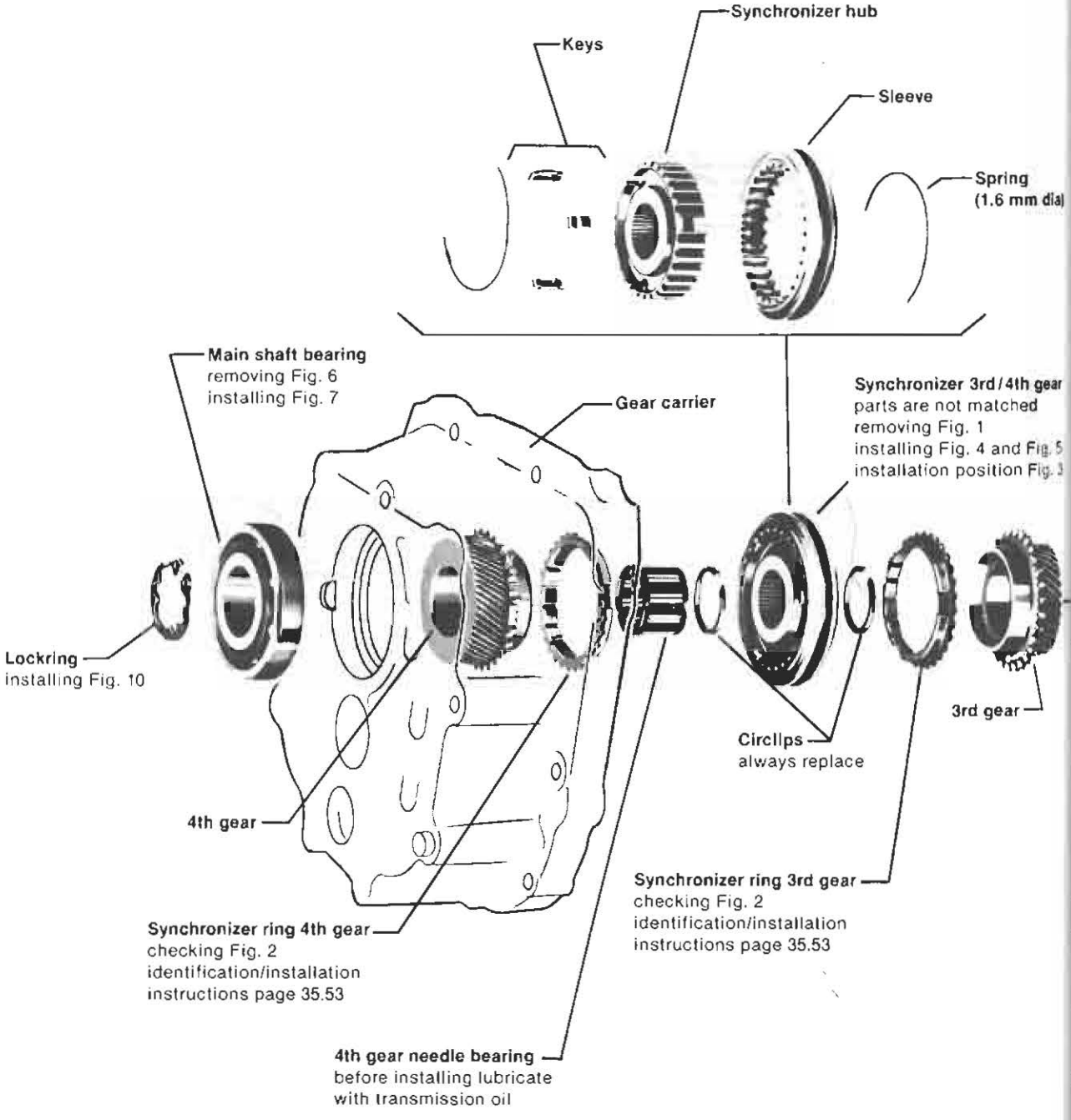
Synchronizer hub
Keys
Sleeve
Spring
(1.6 mm dia)
Main shaft bearing
removing Fig. 6
installing Fig. 7
Gear carrier
Synchronizer 3rd/4th gear
parts are not matched
removing Fig. 1
installing Fig. 4 and Fig. 5
installation position Fig. 3
Lockring
installing Fig. 10
3rd gear
CircIips
always replace
4th gear
Synchronizer ring 3rd gear
checking Fig. 2
identification/installation
instructions page 35.53
Synchronizer ring 4th gear
checking Fig. 2
identification/installation
instructions page 35.53
4th gear needle bearing
before installing lubricate
with transmission oil

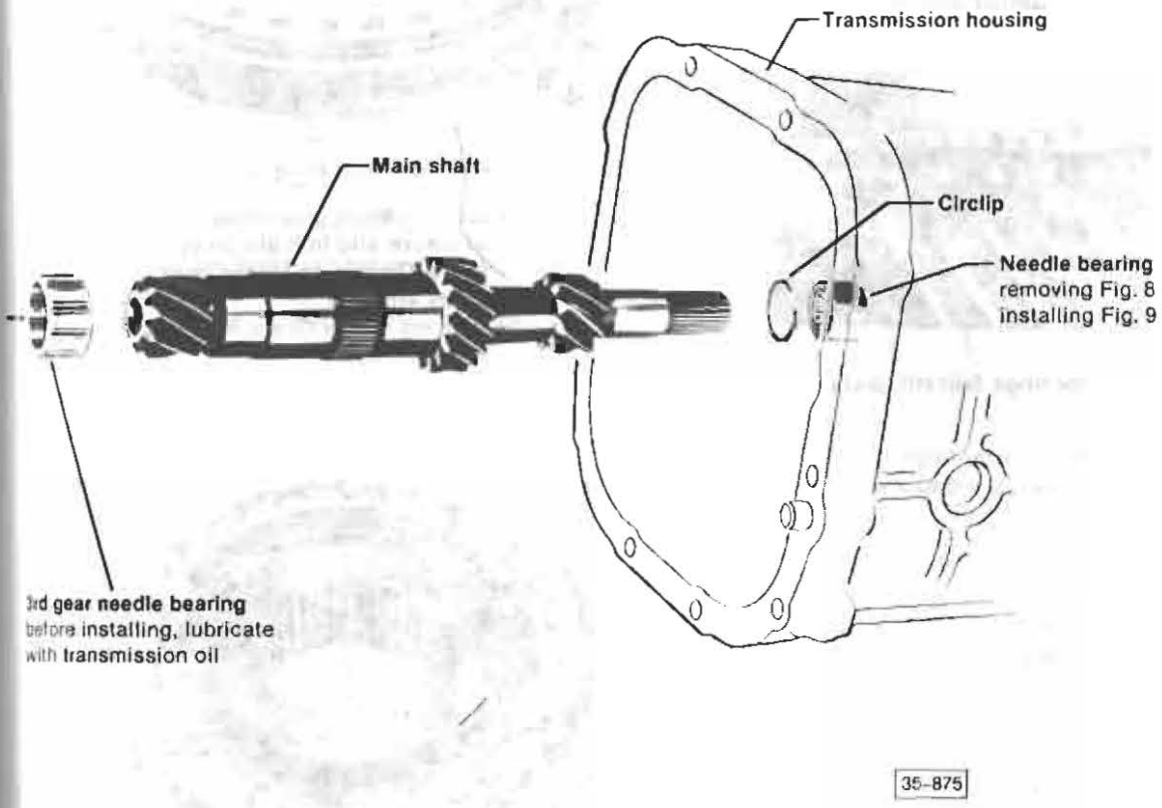
Transmission housing
Main shaft
Circlip
Needle bearing
removing Fig. 8
installing Fig. 9
3rd gear needle bearing
before installing, lubricate
with transmission oil
35-875

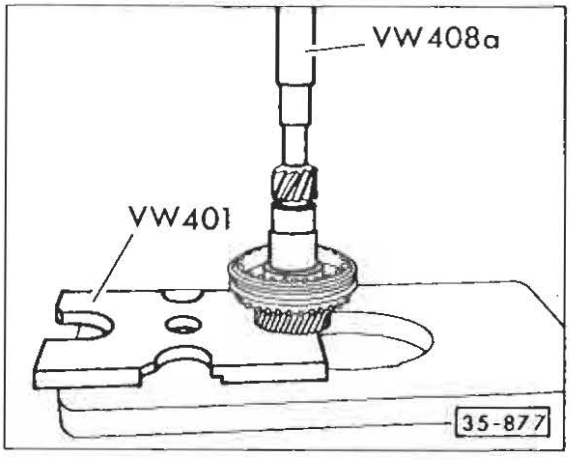

Fig. 1 **Synchronizer 3rd/4th gears, removing**

—press off together with 3rd gear

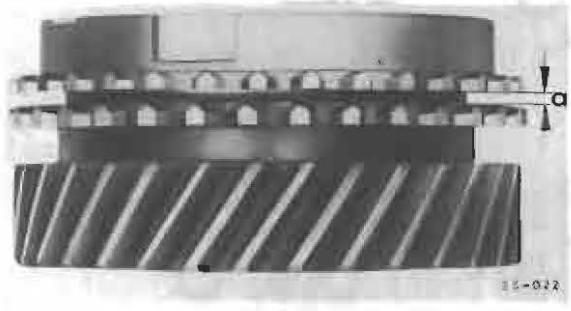

Fig. 2 **Synchronizer rings 3rd/4th gears, checking**

—press synchronizer rings onto gear by hand and measure gap **a** with feeler gauge

Gap a

Gear	New Part mm (in.)	Wear limit mm (in.)
3rd	1.25–1.95 (0.049–0.077)	0.5 (0.020)
4th	1.0–1.7 (0.039–0.067)	0.5 (0.020)

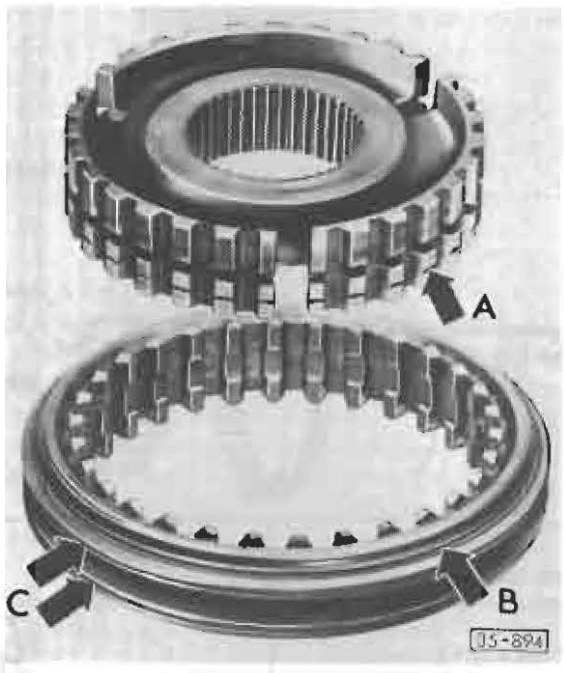

Fig. 3 **Synchronizer 3rd/4th gear, assembling**

- identification grooves (arrows A & B of sleeve and hub are on opposite sides. Groove on sleeve (arrow B) faces 4th gear
- grooves (arrow C) are for identification:
  1st & 2nd gear = 1 groove
  3rd & 4th gear = 2 grooves

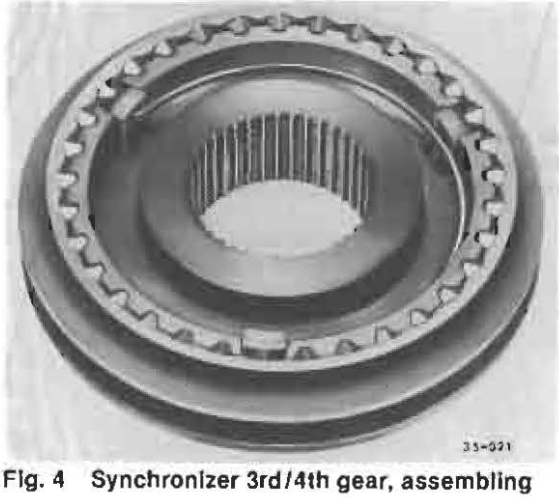

Fig. 4 **Synchronizer 3rd/4th gear, assembling**

—slide sleeve over synchronizer hub. Matched position is not necessary

—insert keys and install springs with ends offset 120°. Angled ends of springs must fit into keys

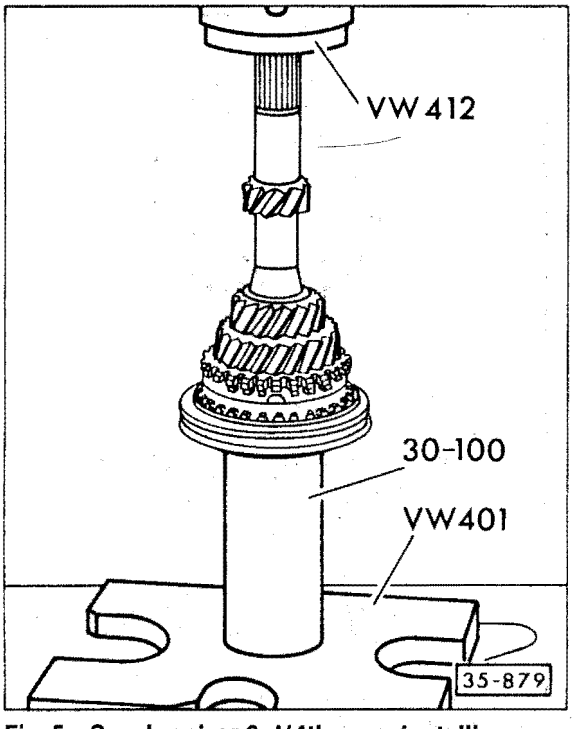

Fig. 5 Synchronizer 3rd/4th gear, installing

—turn synchronizer ring until grooves are in line with keys
- identification groove on sleeve (Fig. 3, arrow B) faces 4th gear

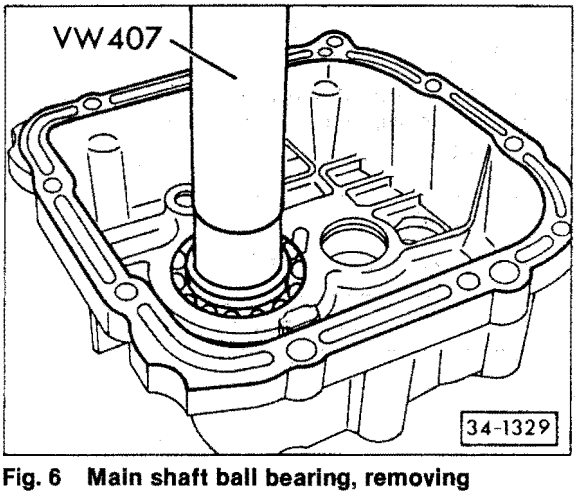

Fig. 6 Main shaft ball bearing, removing

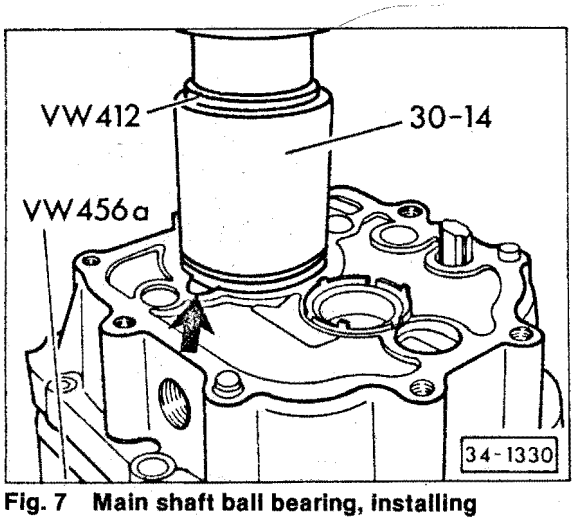

Fig. 7 Main shaft ball bearing, installing

—press in so that recess in bearing is aligned with recess (arrow) in housing

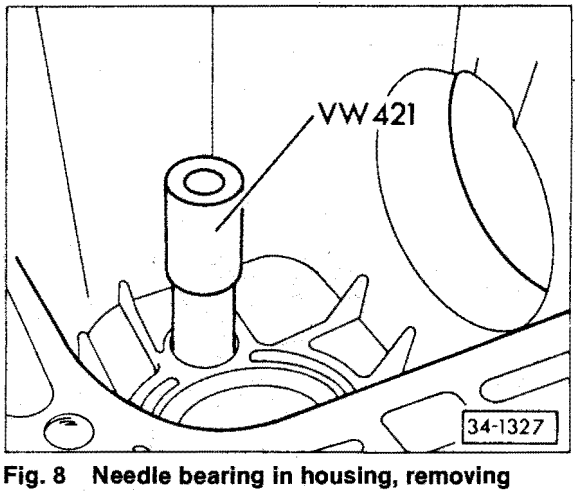

Fig. 8 Needle bearing in housing, removing

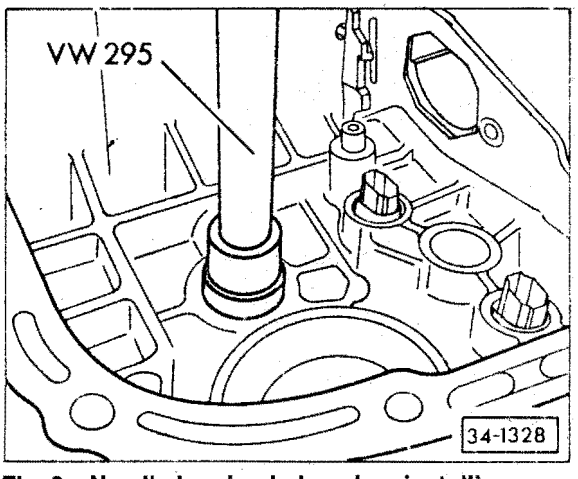

Fig. 9 Needle bearing in housing, installing

- lettered side of bearing (thicker material) must face installing tool

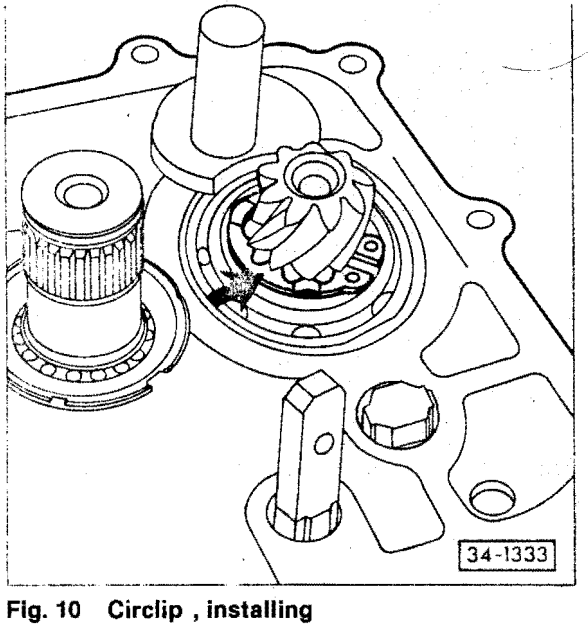

Fig. 10 Circlip , installing

- make sure ring is seated correctly (arrow)

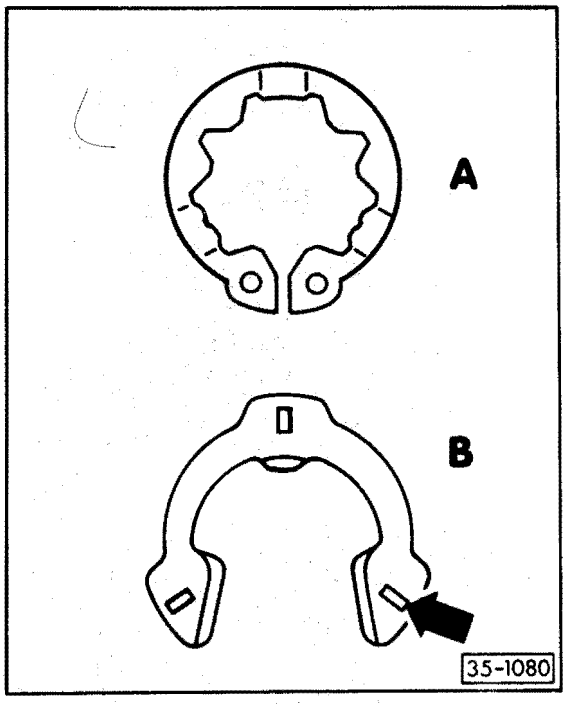

Fig. 11 Circlip, two types

A = previous circlip
Part No. 091 311 381

B = new circlip
Part No. 091 311 381 A

Note

Use either type of circlip during repairs. The previous circlip will be discontinued when stock is used up.

CAUTION

Always replace the circlip during repairs.

Identifying marks on a new circlip (arrow) must face reverse gear splines.

Synchronizer rings, identification

Note

When assembling transmission, install synchronizer ring to same gear from which it was removed

production

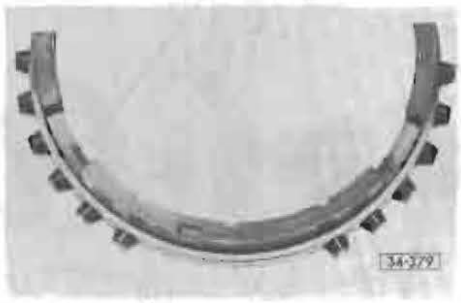

1st gear: brass ring,
molybdenum coated,
3 x 6 teeth,
without notches

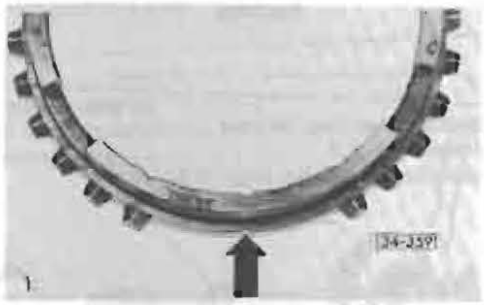

2nd gear: brass ring,
molybdenum coated,
3 x 8 teeth,
with 3 notches (arrow)

4th gear: brass ring,
3 x 8 teeth,
with 3 notches (arrow)

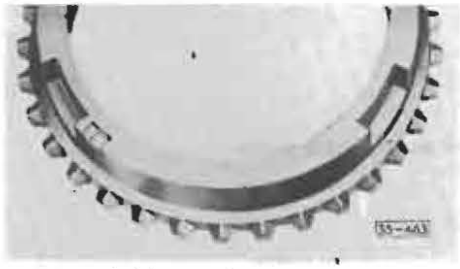

3rd gear: special brass ring,
molybdenum coated,
teeth all around circumference

spare part

For all gears install ring off 3rd gear which is supplied under Spare Part No.: 091 311 295 **A**

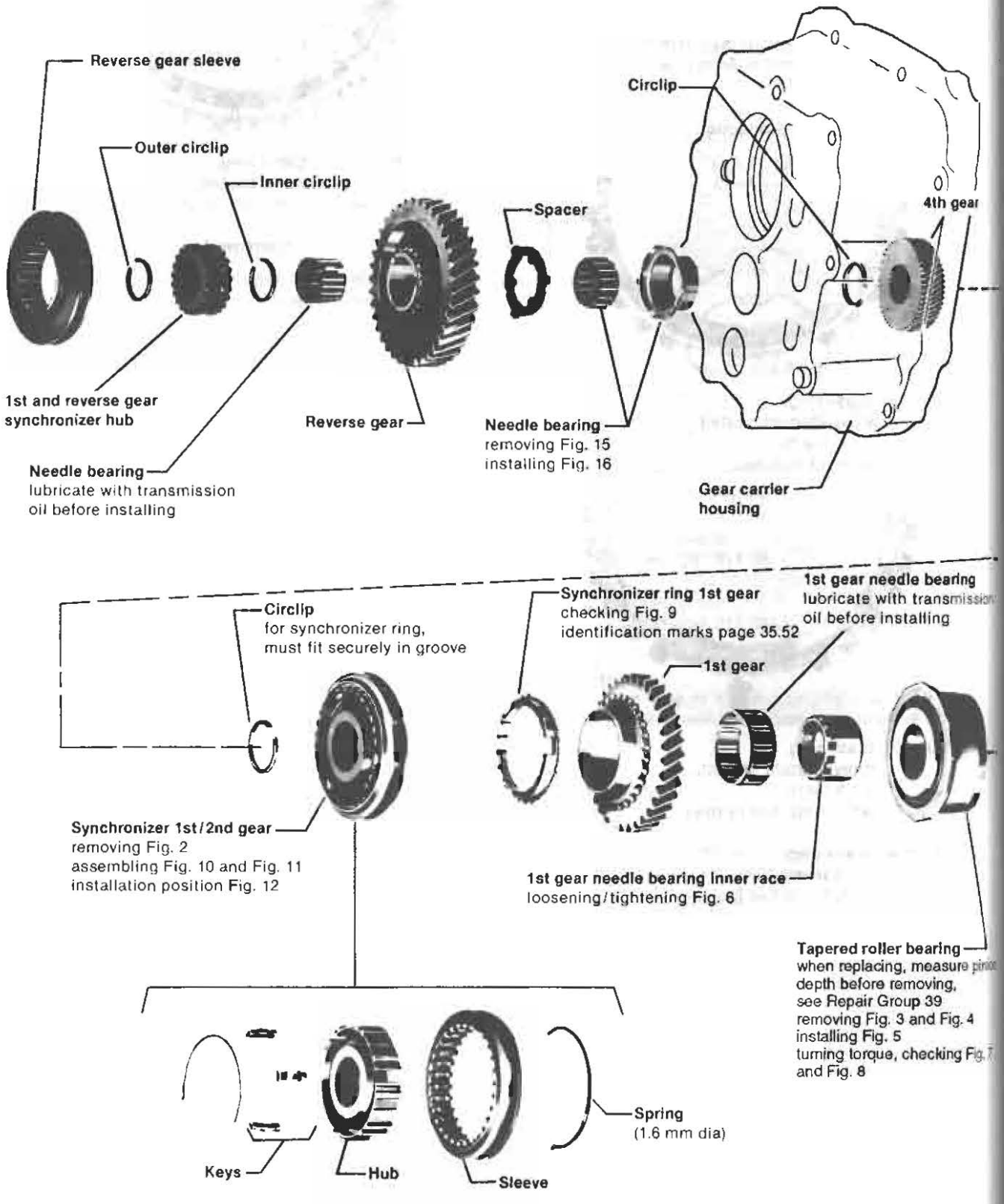
Reverse gear sleeve
Outer circlip
Inner circlip
1st and reverse gear synchronizer hub
Needle bearing
lubricate with transmission oil before installing
Reverse gear
Spacer
Needle bearing
removing Fig. 15
installing Fig. 16
Circlip
4th gear
Gear carrier housing
Circlip
for synchronizer ring, must fit securely in groove
Synchronizer 1st/2nd gear
removing Fig. 2
assembling Fig. 10 and Fig. 11
installation position Fig. 12
Synchronizer ring 1st gear
checking Fig. 9
identification marks page 35.52
1st gear
1st gear needle bearing
lubricate with transmission oil before installing
1st gear needle bearing inner race
loosening/tightening Fig. 6
Tapered roller bearing
when replacing, measure pinion depth before removing, see Repair Group 39
removing Fig. 3 and Fig. 4
installing Fig. 5
turning torque, checking Fig. 7 and Fig. 8
Keys
Hub
Sleeve
Spring
(1.6 mm dia)

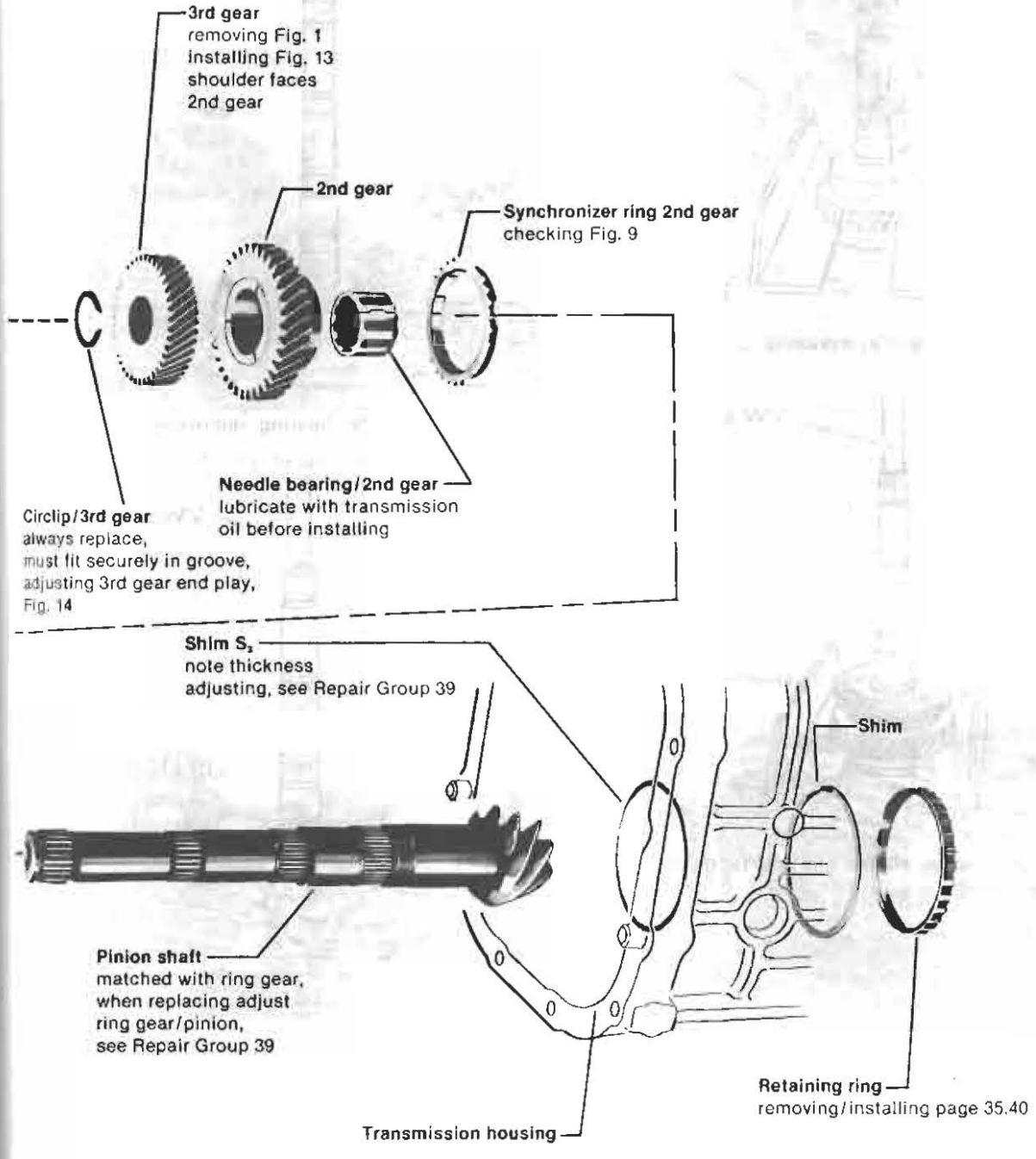
3rd gear
removing Fig. 1
installing Fig. 13
shoulder faces
2nd gear
2nd gear
Synchronizer ring 2nd gear
checking Fig. 9
Needle bearing/2nd gear
lubricate with transmission
oil before installing
Circlip/3rd gear
always replace,
must fit securely in groove,
adjusting 3rd gear end play,
Fig. 14
Shim S_3
note thickness
adjusting, see Repair Group 39
Shim
Pinion shaft
matched with ring gear,
when replacing adjust
ring gear/pinion,
see Repair Group 39
Retaining ring
removing/installing page 35.40
Transmission housing
35-880

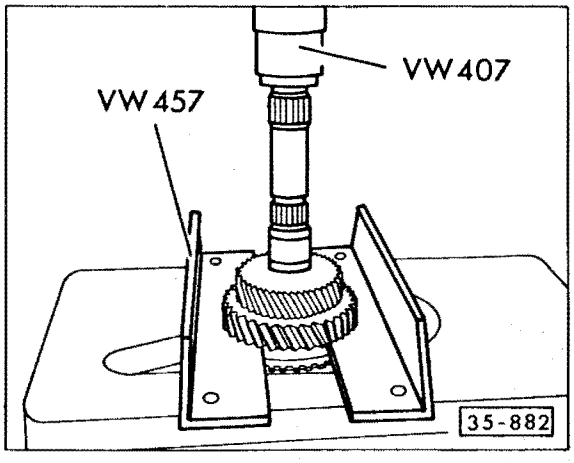

Fig. 1 3rd and 2nd gears, removing

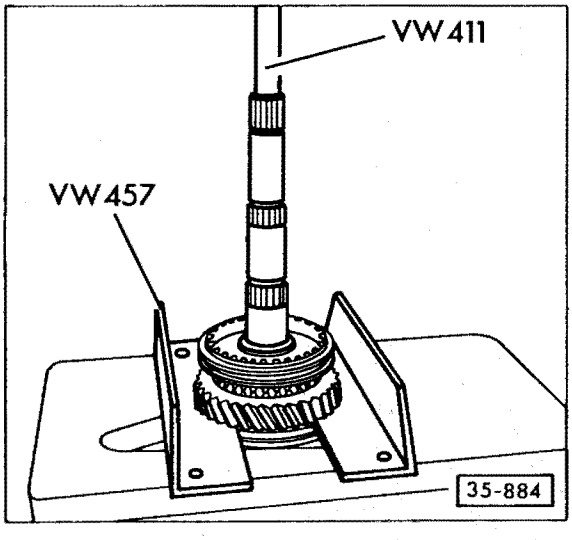

Fig. 2 Synchronizer sleeve/hub and 1st gear, removing

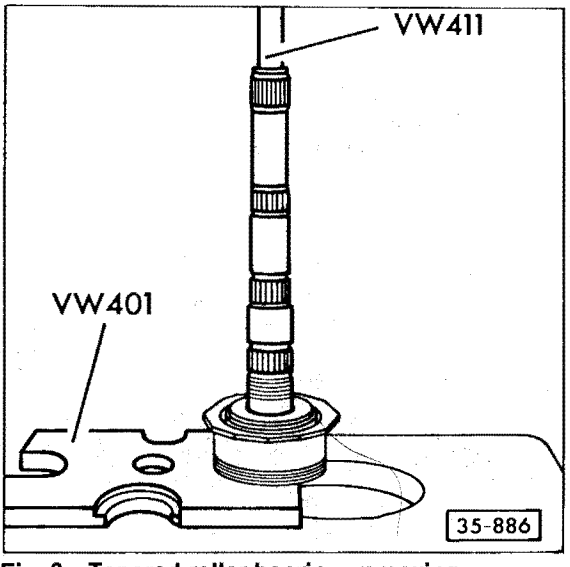

Fig. 3 Tapered roller bearing, removing

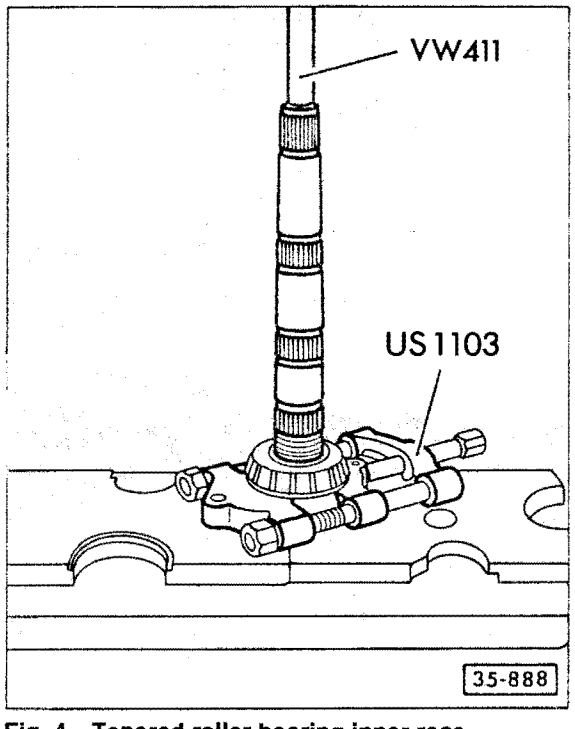

Fig. 4 Tapered roller bearing inner race, removing

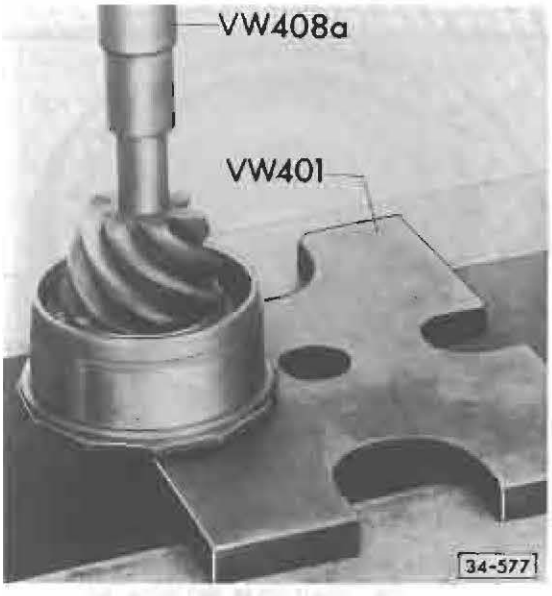

Fig. 5 Tapered roller bearing, installing

—heat inner race to about 100°C (212°F) and press on
—before tightening needle bearing inner race, let tapered roller bearing cool to room temperature

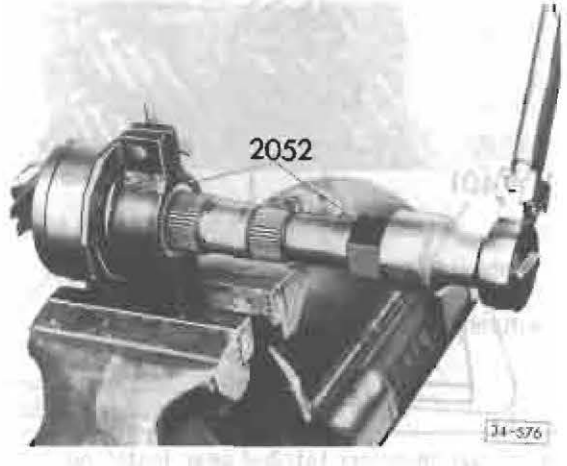

Fig. 6 Needle bearing, loosening/tightening

—heat inner race to about 60°C (140°F) and screw on as far as possible by hand
—place pinion shaft in tool 2052 and tighten wing nut lightly
—tighten inner race to 210 Nm (**152 ft lb**)
—check turning torque of tapered roller bearing, see Fig. 7

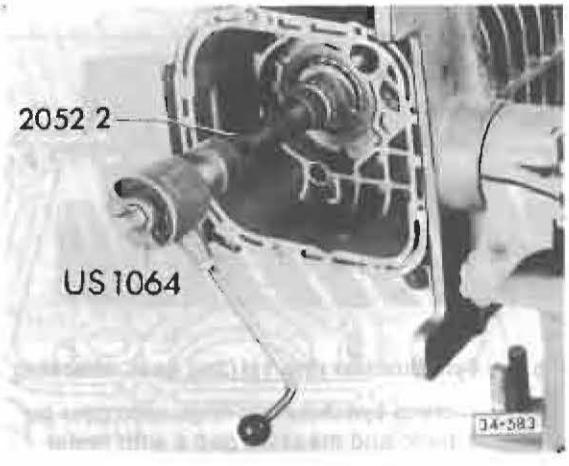

Fig. 7 Tapered roller bearing, checking turning torque

—lubricate bearings with transmission oil and tighten retaining ring
—turn pinion shaft in both directions about 15-20 times
—turn further and read turning torque
- new bearings: up to 210 Ncm (**180 in. lb**)
- used bearings*: up to 70 Ncm (**61 in. lb**) (*after running at least 30 miles)
- if no turning torque can be measured, see Fig. 8

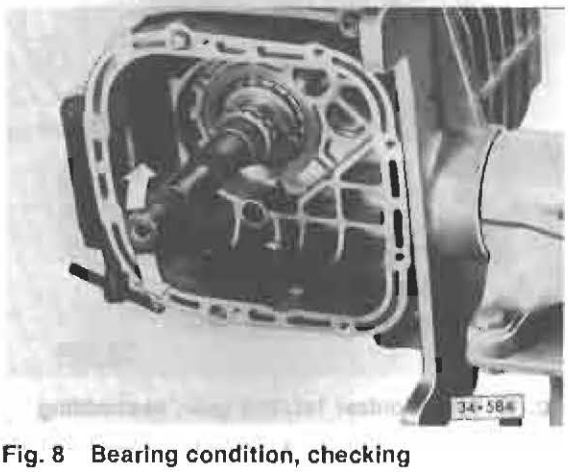

Fig. 8 Bearing condition, checking

—check for rock at end of pinion. There must not be any detectable movement
if **YES,** replace tapered roller bearing

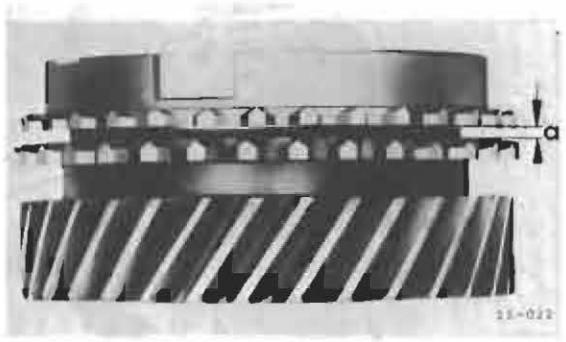

Fig. 9 Synchronizer ring 1st/2nd gear, checking

—press synchronizer rings onto gear by hand and measure gap **a** with feeler gauge

	New Part mm (In.)	Wear limit mm (In.)
Gap a	1.3-1.9 (0.051-0.075)	0.5 (0.020)

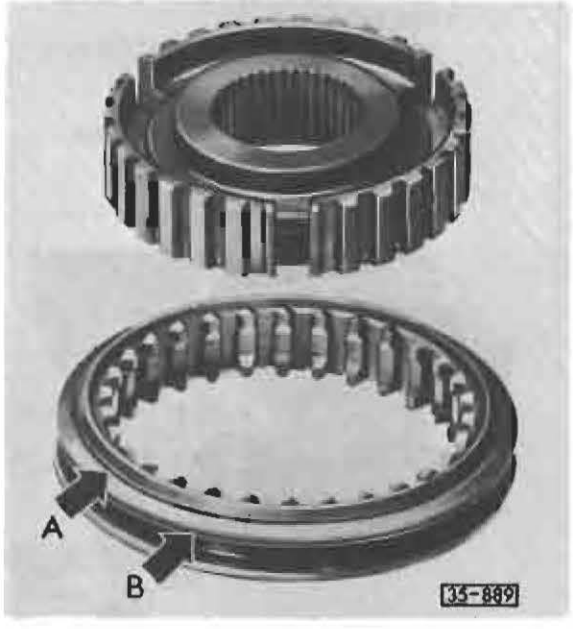

Fig. 10 Synchronizer 1st/2nd gear, assembling

—groove (arrow A) must face 2nd gear
—collar on hub must face 1st gear
—grooves (arrow B) are for identification:
- 1st gear & 2nd gear = 1 groove
- 3rd gear & 4th gear = 2 grooves

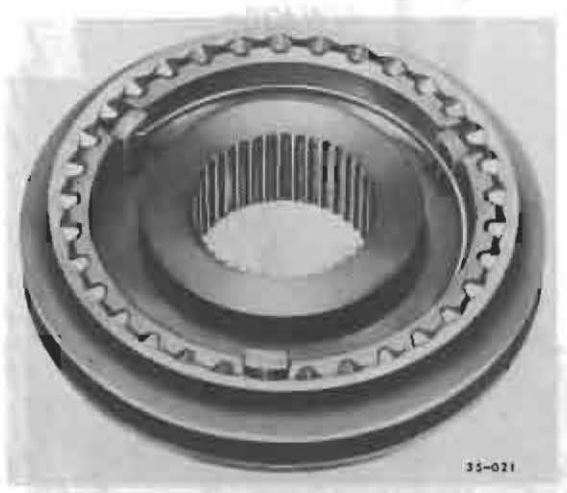

Fig. 11 Synchronizer 1st/2nd gear, assembling

—slide sleeve over sychronizer hub. Matched position is not necessary
—insert keys and install springs with ends offset 120°. Angled ends of springs must fit into keys

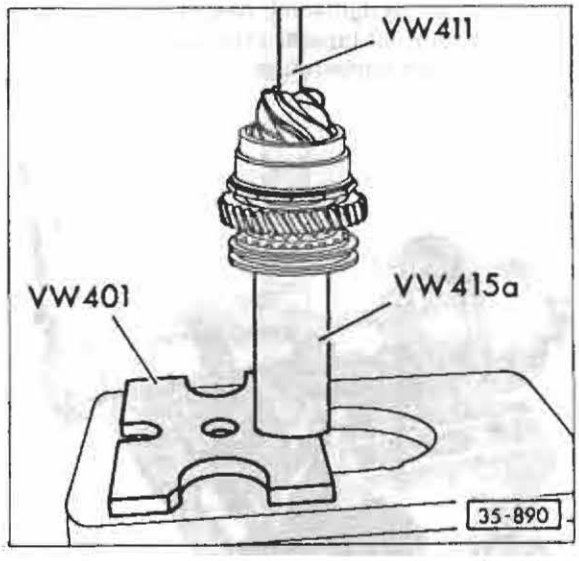

Fig. 12 Synchronizer 1st/2nd gear, installing

—turn synchronizer ring until grooves are in line with keys (installation position, see Fig. 10)

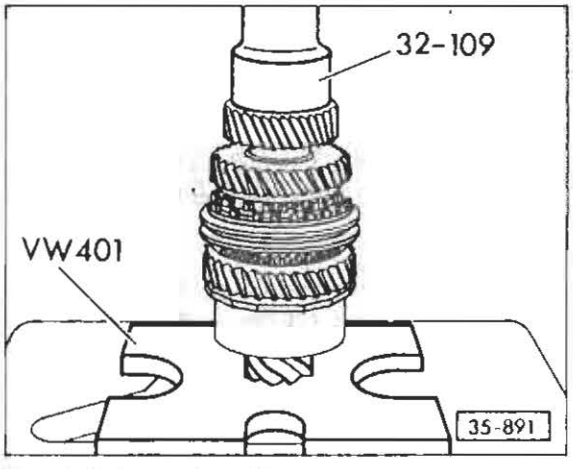

Fig. 13 3rd gear, installing

—collar must face 2nd gear

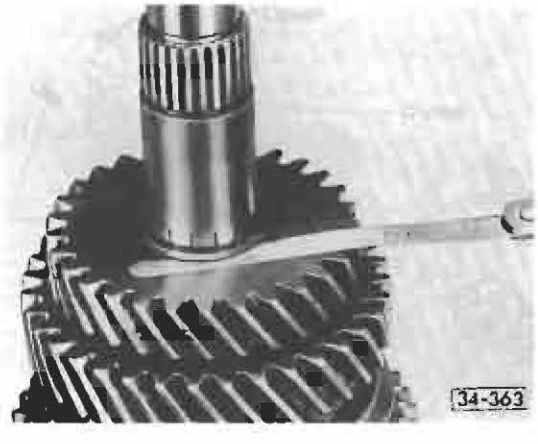

Fig. 14 3rd gear end play, adjusting

—measure end play with feeler gauge
—adjust by selecting suitable circlip
• play should be 0.05 mm-0.20 mm (try to keep lower limit)

Circlips available:

Thickness mm	Color	Part No.
1.60	black	113 311 382
1.75	blue	113 311 383
1.90	brown	113 311 384
2.05	gray	113 311 385
2.20	copper	113 311 386
2.30	brass	113 311 387
2.40	silver	113 311 388

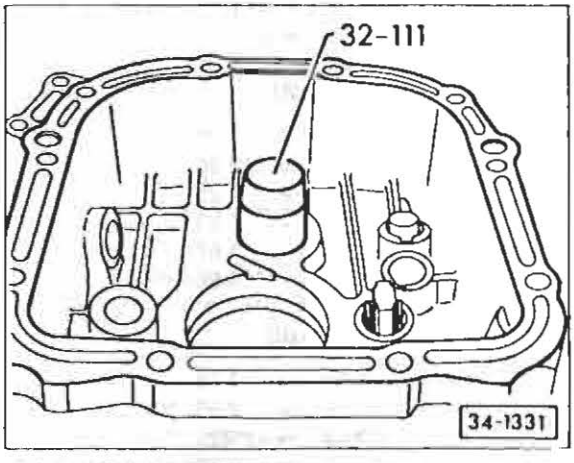

Fig. 15 Pinion needle bearing in gear carrier housing, removing

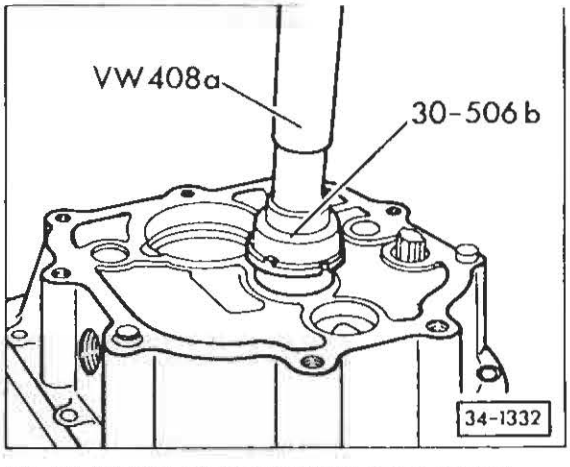

Fig. 16 Pinion needle bearing in gear carrier housing, installing

Listed below are gear ratios and lubricant specifications for 1985 MY Vanagons equipped with 4-speed manual transmission 091/l:

Gear Ratios	Trans. DU		
1st gear	34:9	=	3.78
2nd gear	33:16	=	2.06
3rd gear	63:50	=	1.26
4th gear	52:61	=	0.85
Reverse	33:9	=	3.67
Final drive	34:7	=	4.86

Gear Ratios	Trans. ABD		
1st gear	34:9	=	3.78
2nd gear	33:16	=	2.06
3rd gear	49:40	=	1.225
4th gear	41:48	=	0.85
Reverse	33:9	=	3.67
Final drive	29:6	=	4.83

lubricant capacity (incl. differential)
091/l ..... 3.0 l (3.2 US qt)
viscosity .. SAE 80W, SAE 80W/90
type .. hypoid, MIL-L-2105; API/GL-4

To reduce shifting effort, transmission oil capacity has been reduced.

For production reasons, the oil filler hole remains at the same location.

Oil should only be poured in to a level approximately 15 mm (9/16 in.) below the filler hole.

Transmission filling capacities:
Vehicles with gasoline engines 3.0 liters (3.2 qt)
Vehicles with Diesel engines 4.0 liters (4.2 qt)

Transmissions installed in vehicles produced before May, 1984 are subject to refinements currently used in production. Transmissions needing repair should be inspected and repaired as necessary according to following procedures with parts required according to transmission date of manufacture (see transmission housing code).

Selector shaft, modifications

- external repairs performed with transmission installed

Note

Only latest version parts will be supplied as spare parts.

CAUTION

Part numbers are for reference only. Always check with your Parts Department for latest parts information.

A — Selector shaft
— replace complete shaft with new version

B — Selector shaft cover
- provided with shoulder for spring to maintain proper position when assembling

— replace cover and O-ring

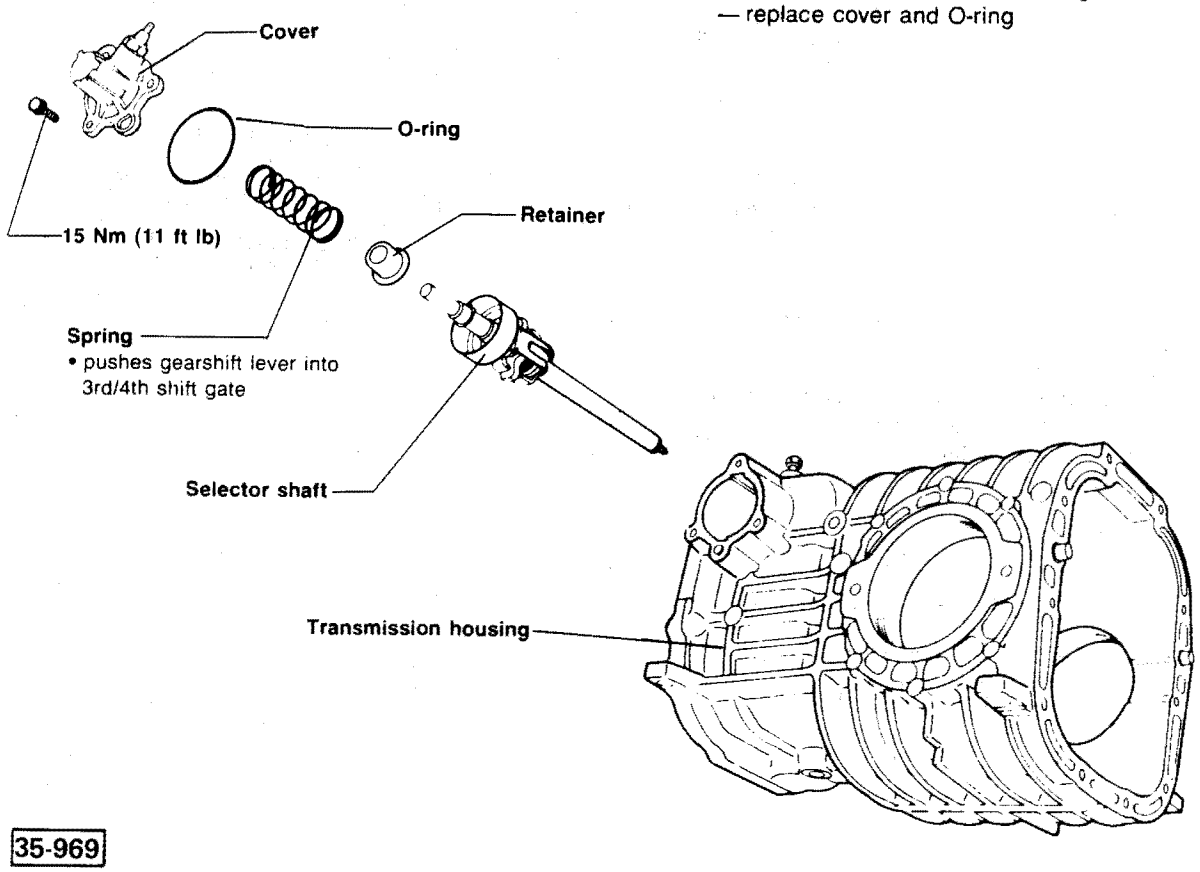

35-969

Internal repairs (requiring disassembly of transmission)

Shift forks/synchronizers, modifications

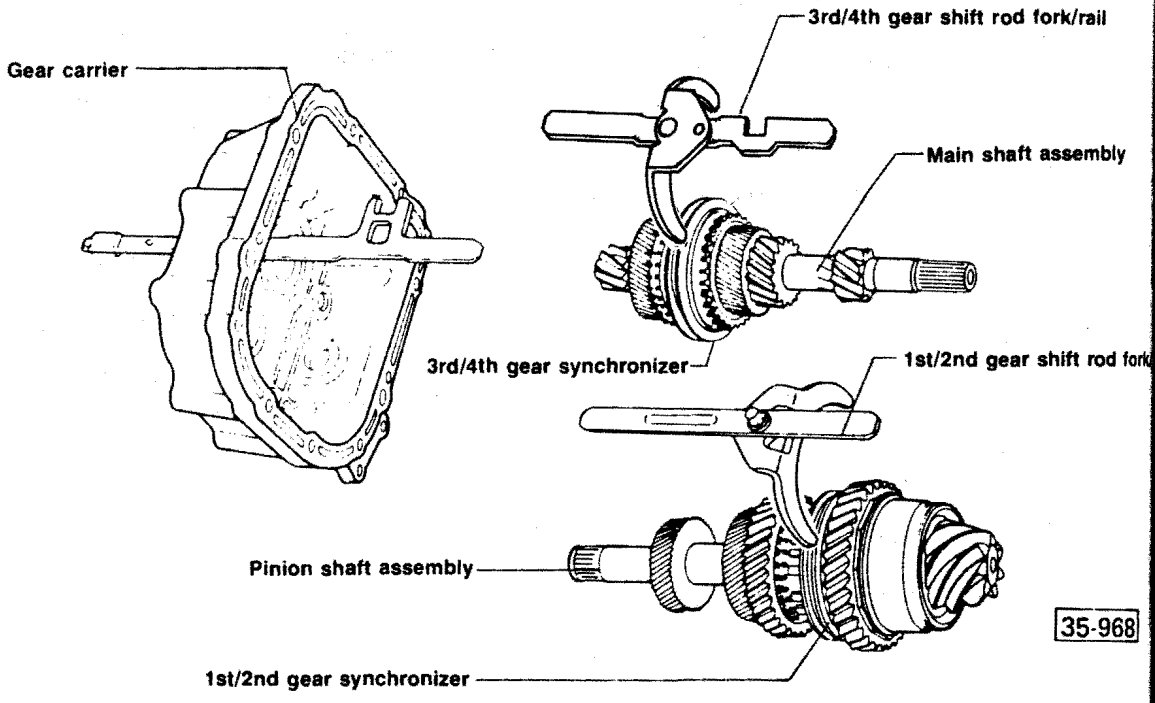

C — Shift forks/rails
- 1st/2nd and 3rd/4th gear shift forks/rails are rivited and welded to maintain proper alignment to each other
  — replace with new shift forks/rails

D — Synchronizers
- 1st/2nd and 3rd/4th gear synchronizers have been changed to prevent jumping out of gear
- changes cannot be detected visually
  — replace with new version synchronizers

Reverse shift fork/rail, modifications

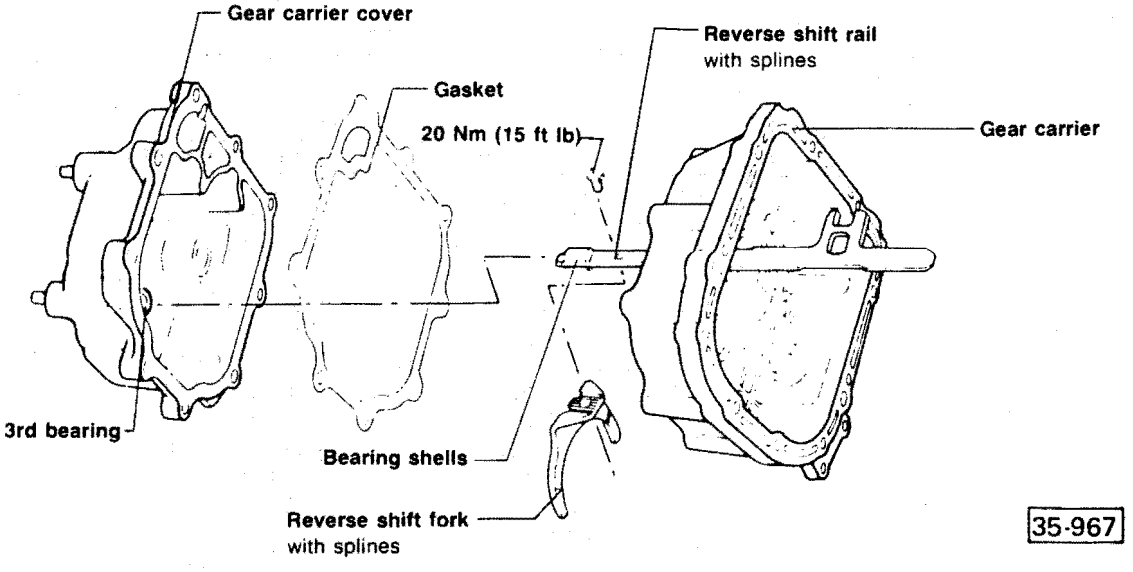

E — Reverse shift fork/rail
- mating surfaces of fork/rail have splines to properly align to each other
- reverse shift rail is lengthened and has two bearing shells which ride in 3rd bearing which is housed in boss provided in gear carrier cover

— replace with all new version parts

Reverse gear/shaft, modifications

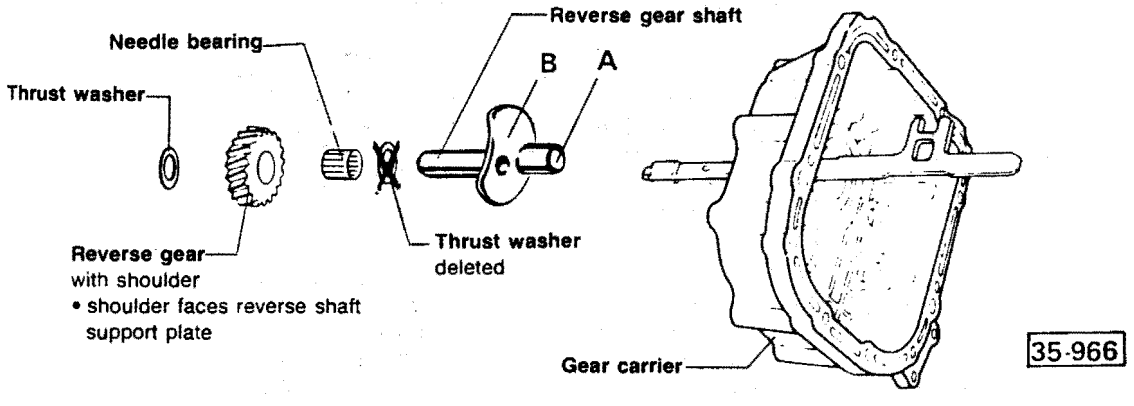

F — Reverse gear/shaft
- diameter of reverse gear shaft bearing pin **A** increased from 12 to 18 mm
- bearing carrier hole increased to fit
- thickness of support plate **B** increased from 5 to 6 mm and thrust washer between plate and reverse gear is deleted
- reverse gear provided with shoulder

— replace with all new version parts **only** if reverse shaft pin **A** is loose in bearing carrier

Note

Thrust washer between support plate and reverse gear must be removed if new version reverse shaft is installed.

Parts requirements (based on transmission date of manufacture)

Note

Previous version parts are not available and must be replaced by latest version listed below

CAUTION

Part numbers are for reference only. Always consult your Parts Department for latest parts information

Transmission date of manufacture	Parts Required	
	Description	Part number (Quantity)
Prior to 09 08 2	Selector shaft**	091-311-534B**
	Selector shaft cover	091-301-232A
	Selector shaft cover O-ring	091-301-278A
	Shift fork (1/2)	091-311-549A
	Shift fork (3/4)	091-311-559A
	Synchronizer (1/2)	091-311-241B
	Synchronizer (3/4)	091-311-301B
	Reverse shift fork	091-311-571A
	Reverse shift rail	091-311-577C
	Reverse shift rail bearing shells	091-301-146(2)
	Bearing carrier cover	091-301-205E
	Reverse gear shaft*	091-311-514A
	Bearing carrier*	091-301-173C
	Reverse gear*	091-311-507A
	*Only to be replaced if reverse shaft is loose in bearing carrier	
from 10 08 2 to 25 08 2	Selector shaft**	091-311-534B**
	Selector shaft cover	091-301-232A
	Selector shaft cover O-ring	091-301-278A
	Shift fork (1/2)	091-311-549A
	Shift fork (3/4)	091-311-559A
	Synchronizer (1/2)	091-311-241B
	Synchronizer (3/4)	091-311-301B
	Reverse shift fork	091-311-571A
	Reverse shift fork rail	091-311-577C
	Reverse shift rail bearing shells	091-301-146(2)
	Bearing carrier cover	091-301-205E
from 26 08 2 to 18 11 2	Selector shaft**	091-311-534B**
	Selector shaft cover	091-301-232A
	Selector shaft cover O-ring	091-301-278A
	Shift fork (1/2)	091-311-549A
	Shift fork (3/4)	091-311-559A
	Synchronizer (1/2)	091-311-241B
	Synchronizer (3/4)	091-311-301B
from 19 11 2 to 24 11 2	Selector shaft**	091-311-534B**
	Selector shaft cover	091-301-232A
	Selector shaft cover O-ring	091-301-278A
	Shift fork (1/2)	091-311-549A
	Shift fork (3/4)	091-311-559A
from 25 11 2 to 02 12 2	Selector shaft**	091-311-534B**
	Selector shaft cover	091-301-232A
	Selector Shaft cover O-ring	091-301-278A
from 03 12 2 to **vehicles** produced up to May, 1984	Selector shaft**	091-311-534B**

** See page 35.60a

5-Speed 094 Manual Transmission Case, Gears, Shafts

Quick Data

Index

—Adjusting rings 35.62
  installing 35.65
  marking/removing 35.64
—Assembly 35.62, 35.63, 35.66, 35.67
  mounting in repair stand 35.64
—Clutch housing assembly 35.74
—Differential 35.65
—Drive flange 35.62
  circlip, installing 35.65
  installing 35.65
  oil seal 34.18
  removing 35.64
—Gear carrier 35.76
  assembly 35.66, 35.67
  assembling 35.70, 35.71
  cover 35.76
  installing 35.69
  removing 35.68
—Gears
  1st, shim 35.72, 35.73
  2nd, removing 35.88
  3rd/4th, removing 35.88
  4th, end play 35.91
  installing 35.91
—Gearshift lever 34.10
—Gearshift linkage 34.10, 34.11
—Installing 34.17
—Lever bearing plate 34.10
—Main shaft 35.81
  assembly 35.80, 35.81
  ball bearing 35.83
  lock ring 35.84
  needle bearings 35.83, 35.84
  oil seal 35.75
  rear, removing/installing 35.65a
—Modifications to trans. manufactured prior to Dec. 15, 1982 35.65b–35.65d
—Pinion shaft 35.87
  assembly 35.86, 35.87
  needle bearings 35.89, 35.91, 35.92
  roller bearings 35.88, 35.89
—Removing 34.16, 34.17
—Retaining rings 35.67
  installing 35.70
  removing 35.68
—Shift rod bushing 35.78
—Shift shaft oil seal 35.78
—Starter bushing 35.75
—Synchronizers
  assembling 35.90
  checking 35.82
  installing 35.90
  removing 35.82, 35.88
  ring, checking 35.90
  identification 35.92
  2nd/3rd gear 35.90
  4th/5th gear 35.82, 35.83
—Transmission, housing 35.77
  assembling 35.69
  disassembling 35.68, 35.69

4-Speed 091
— See page 35.1

4-Speed 091/1
— See page 35.31

094-4WD Syncro
— See page 35.93

Transmission/Final drive lubricant:
Hypoid oil API/GL-4; MIL-L2105
SAE 80W, SAE 80W/90
Capacity: 4.0 ltr (4.2 US qt)

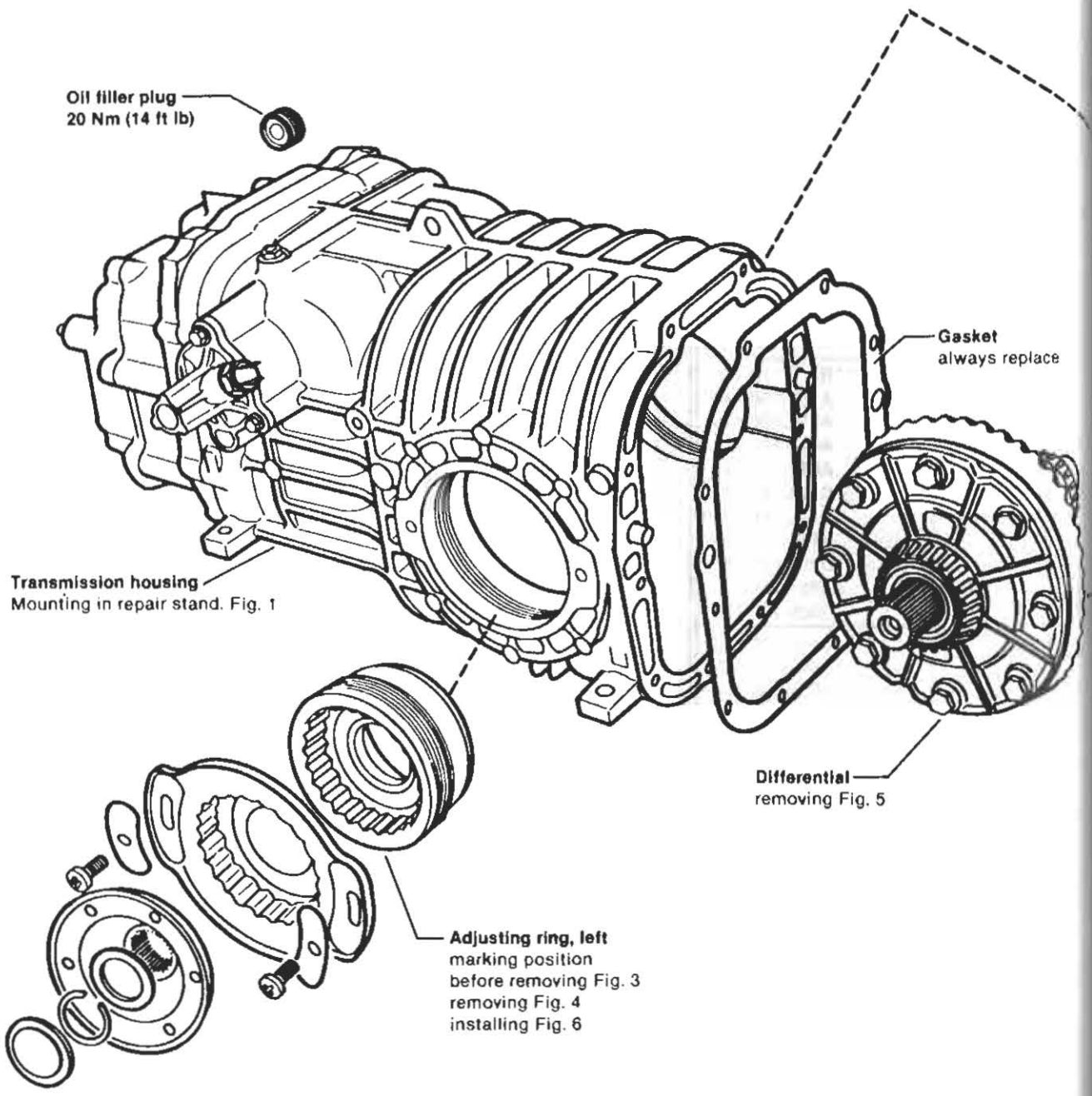

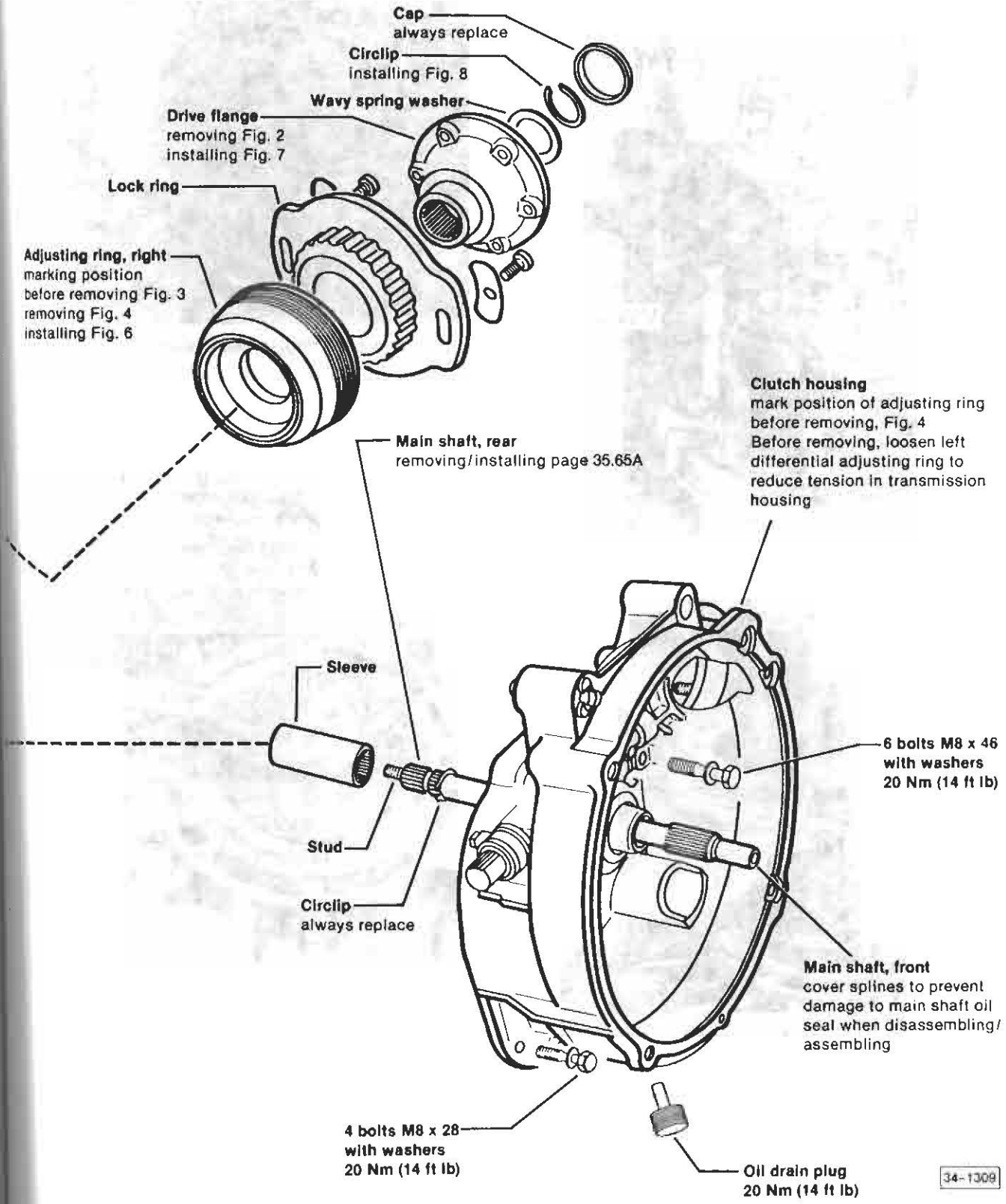
Cap
always replace
Circlip
installing Fig. 8
Wavy spring washer
Drive flange
removing Fig. 2
installing Fig. 7
Lock ring
Adjusting ring, right
marking position
before removing Fig. 3
removing Fig. 4
installing Fig. 6
Main shaft, rear
removing/installing page 35.65A
Clutch housing
mark position of adjusting ring
before removing, Fig. 4
Before removing, loosen left
differential adjusting ring to
reduce tension in transmission
housing
Sleeve
6 bolts M8 x 46
with washers
20 Nm (14 ft lb)
Stud
Circlip
always replace
Main shaft, front
cover splines to prevent
damage to main shaft oil
seal when disassembling/
assembling
4 bolts M8 x 28
with washers
20 Nm (14 ft lb)
Oil drain plug
20 Nm (14 ft lb)
34-1309

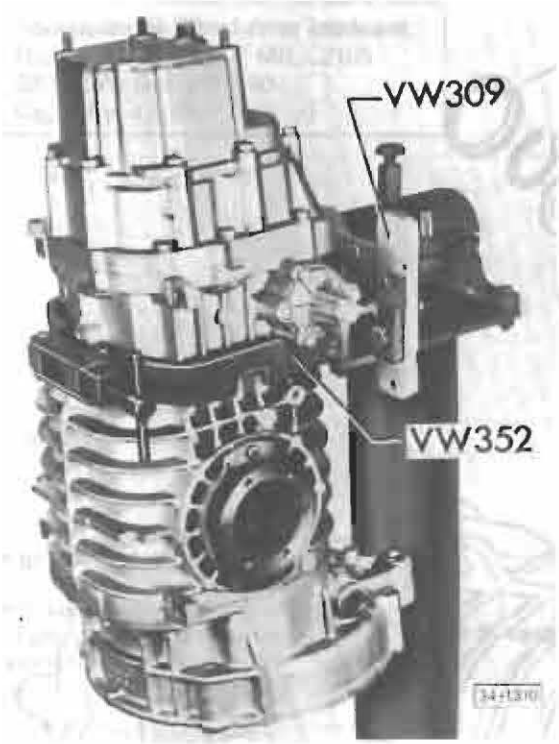

Fig. 1 Transmission assembly, mounting in repair stand

—drain transmission oil
—mount transmission in repair stand

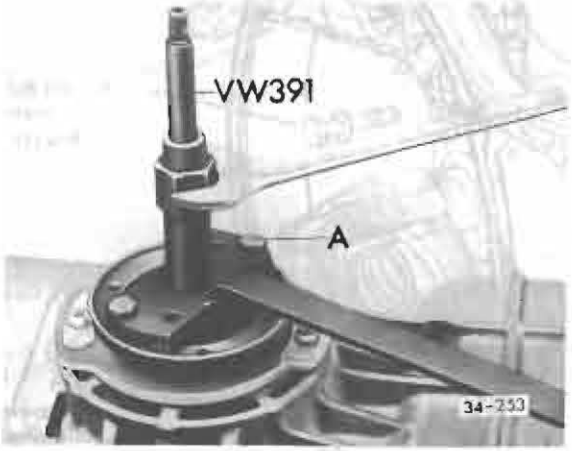

Fig. 2 Drive flange, removing

—remove circlip and wavy spring washer
—attach VW391 to flange with 2 bolts
• A = M8 x 30 bolts
—pull drive flange out

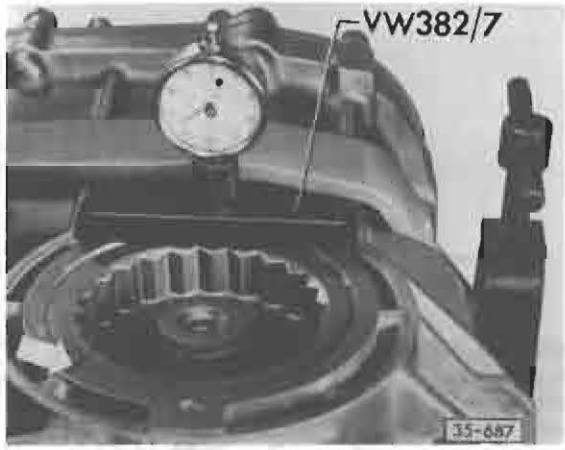

Fig. 3 Adjusting ring, marking position

Note

Before starting repair work (which does not require final drive to be adjusted) mark position of adjusting rings on transmission housing. Measure depth to which they are installed with VW 382/7 and write down readings

—scribe left side (ring gear side) with one mark (arrow)
—scribe right side with two marks

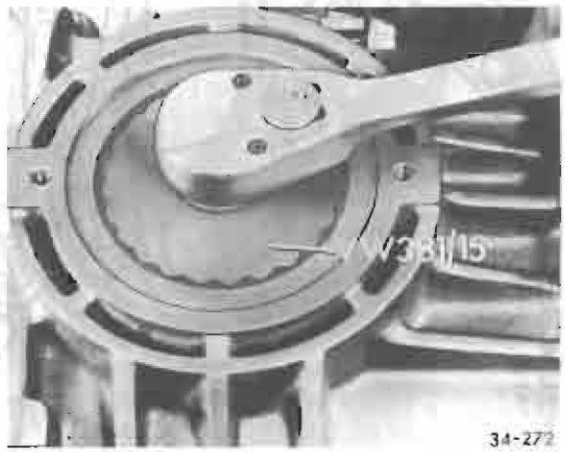

Fig. 4 Adjusting rings, removing



Fig. 5 **Differential, removing**

—remove adjusting rings and rear main shaft
—lift out differential

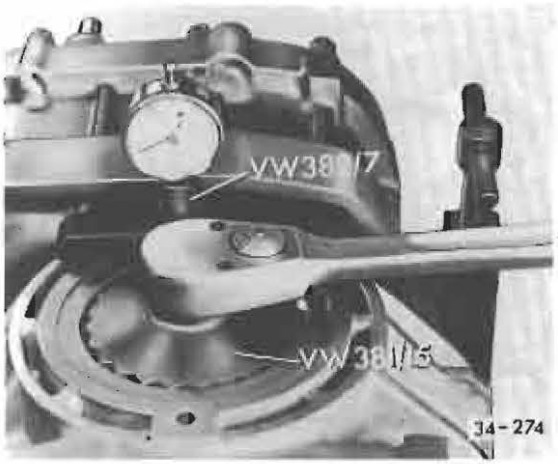

Fig. 6 **Adjusting rings, installing**

—install left and right adjusting rings and align marks at depth previously measured
—lubricate threads with MoS_2 grease

CAUTION

Do not tighten left side adjusting ring until clutch housing has been installed and bolts torqued

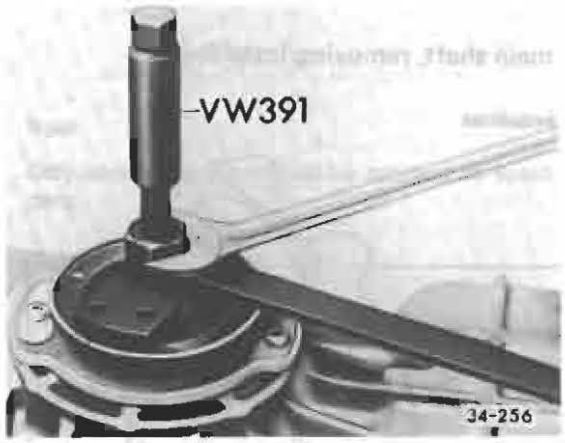

Fig. 7 **Drive flange, installing**



Fig. 8 **Circlip for drive flange, installing**

—insert wavy spring washer and circlip
—press circlip into groove with VW 244b and at same time check that washer is centered

Rear main shaft, removing/installing

Work sequence

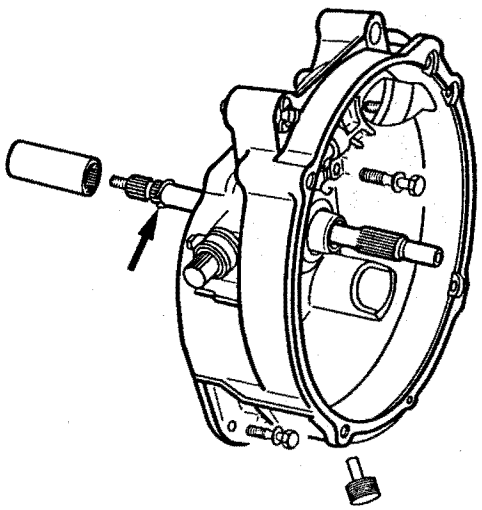

34-1309 A

Removing

- remove circlip (arrow)
- push sleeve backward and screw out main shaft

Installing

- screw front and rear main shafts together, then back off one spline
- push sleeve on and install new circlip

Transmission modifications
(manufactured prior to Dec. 15, 1982)

Transmissions with date of manufacture (see transmission housing code) prior to 15 12 2 (December 15, 1982) are subject to refinements currently used in production. Transmissions needing repair should be inspected and repaired as necessary according to following two groups of procedures with required parts according to dates of manufacture.

Note

Only latest version parts will be supplied as spare parts.

CAUTION

Part numbers are for reference only. Always check with your Parts Department for latest parts information.

Selector shaft, modifications
- external repairs performed without removing transmission

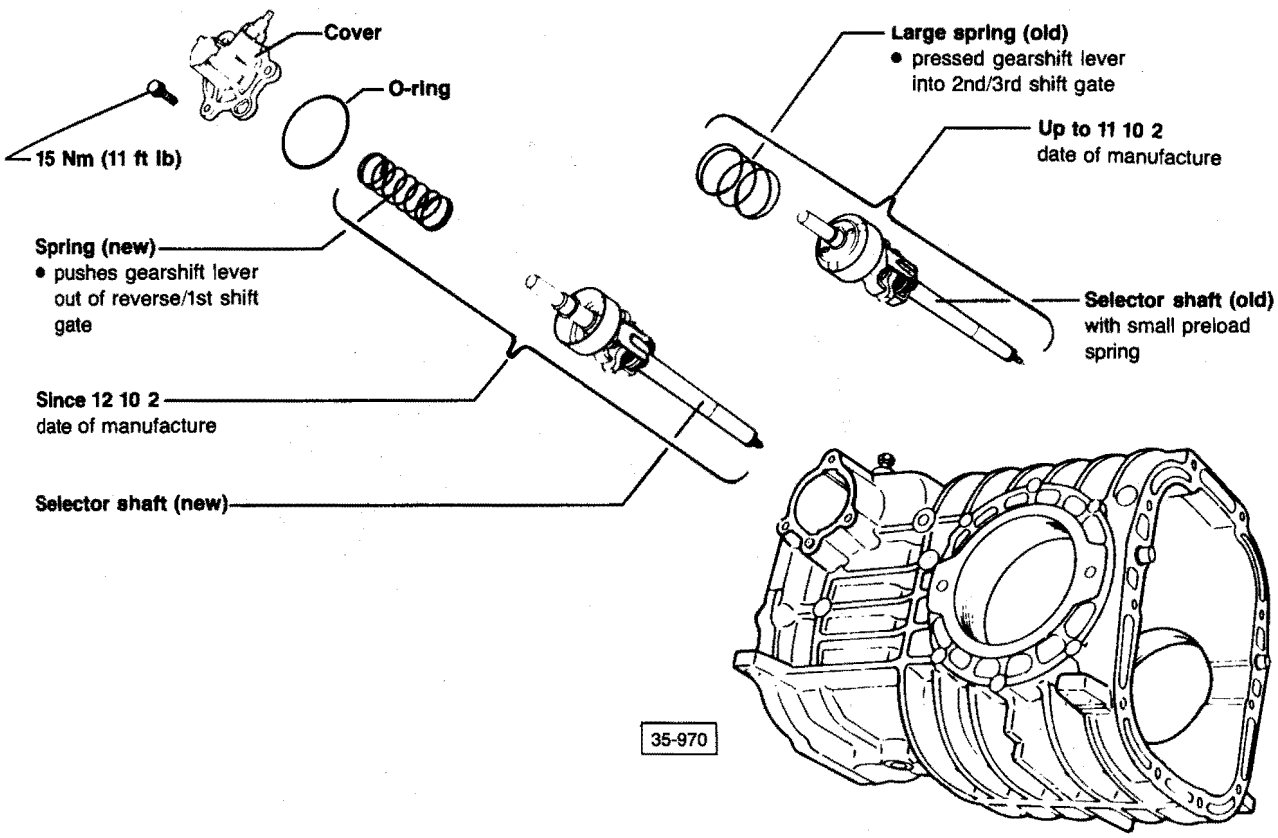

A — Selector shaft
— replace complete shaft with new version

B — Selector shaft spring
Gearshift lever is now moved by spring pressure out of reverse/1st shift gate rather than into 2nd/3rd shift gate
— install new selector shaft spring

Note

Large spring may be left in transmissions in which originally installed to accommodate driver's current shifting habits.

C — Selector shaft cover
- provided with shoulder for spring to maintain proper position when assembling
— replace cover and o-ring

Shift forks/synchronizers, modifications
- internal repairs requiring disassembly of transmission

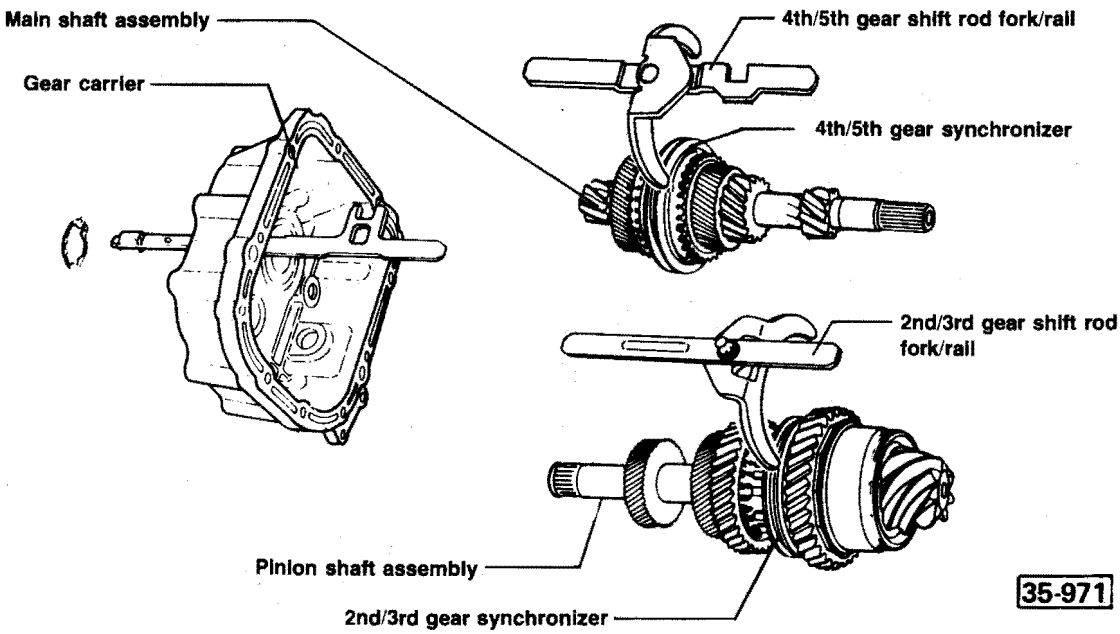

D — Shift forks/rails
- 2nd/3rd and 4th/5th gear shift forks/rails are riveted and welded to maintain proper alignment to each other
— replace with new shift forks/rails

E — Synchronizers
- 2nd/3rd and 4th/5th gear synchronizers have been changed to prevent jumping out of gear
- changes cannot be detected visually
— replace with new version synchronizers

Parts requirements (based on transmission date of manufacture)

Note

Previous version parts are not available and must be replaced by latest version listed below.

CAUTION

Part numbers are for reference only. Always check with your Parts Department for latest parts information.

Transmission date of manufacture	Parts required	
	Description	Part Number
Prior to 11 10 2	Selector shaft Selector shaft spring Selector shaft cover Selector shaft cover o-ring Synchronizer (2/3) Synchronizer (4/5) Shift fork (2/3) Shift fork (4/5)	091-311-534B 091-311-548B 091-301-232A 094-301-278A 091-311-241B 091-311-301B 091-311-549A 091-311-559A
From 12 10 2 to 18 11 2	Selector shaft Selector shaft cover Selector shaft cover o-ring Synchronizer (2/3) Synchronizer (4/5) Shift fork (2/3) Shift fork (4/5)	091-311-534B 091-301-232A 094-301-278A 091-311-241B 091-311-301B 091-311-549A 091-311-559A
From 19 11 2 to 24 11 2	Selector shaft Selector shaft cover Selector shaft cover o-ring Shift fork (2/3) Shift fork (4/5)	091-311-534B 091-301-232A 094-301-278A 091-311-549A 091-311-559A
From 25 11 2 to 02 12 2	Selector shaft Selector shaft cover Selector shaft cover o-ring	091-311-534B 091-301-232A 094-301-278A
From 03 12 2 to 14 12 2	Selector shaft	091-311-534B

Note

Differential must be removed before gear carrier can be removed, see page 35.65

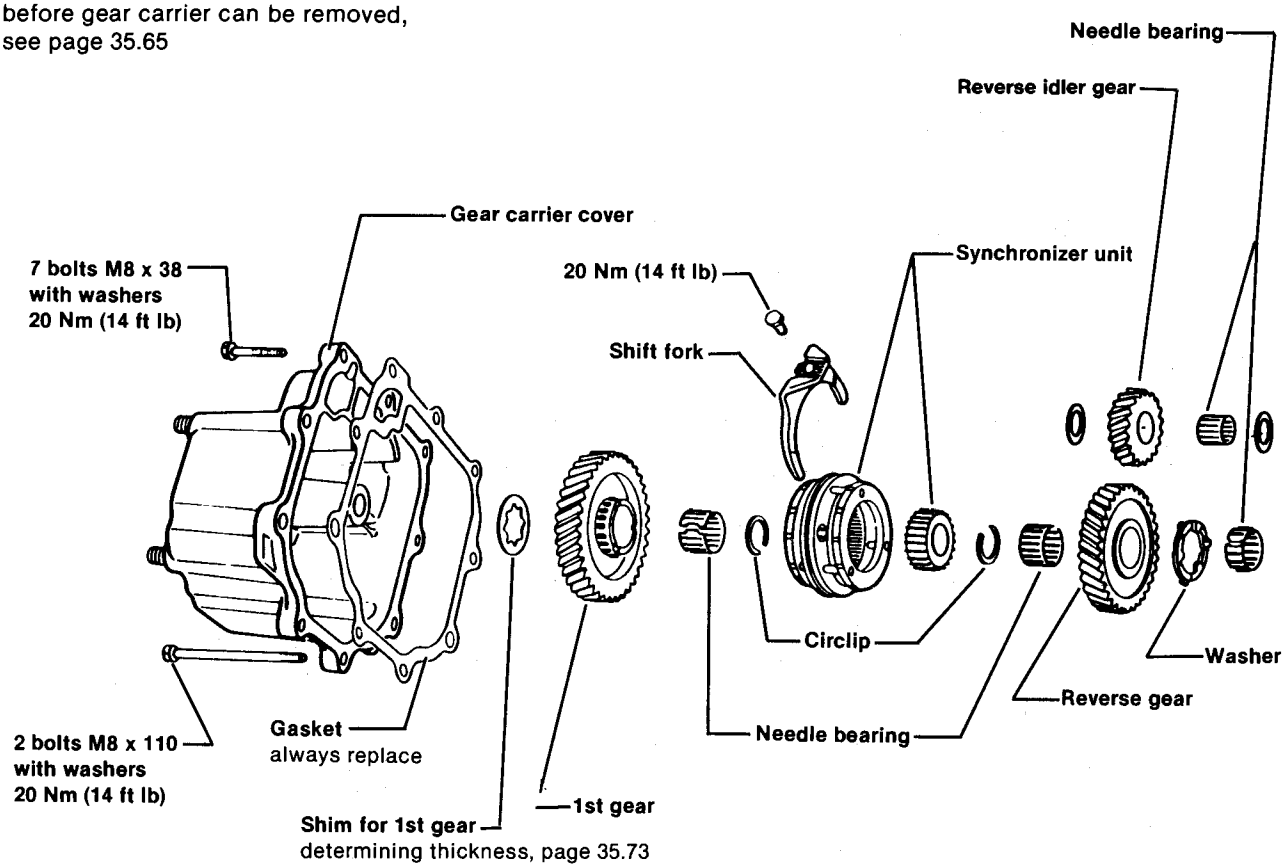

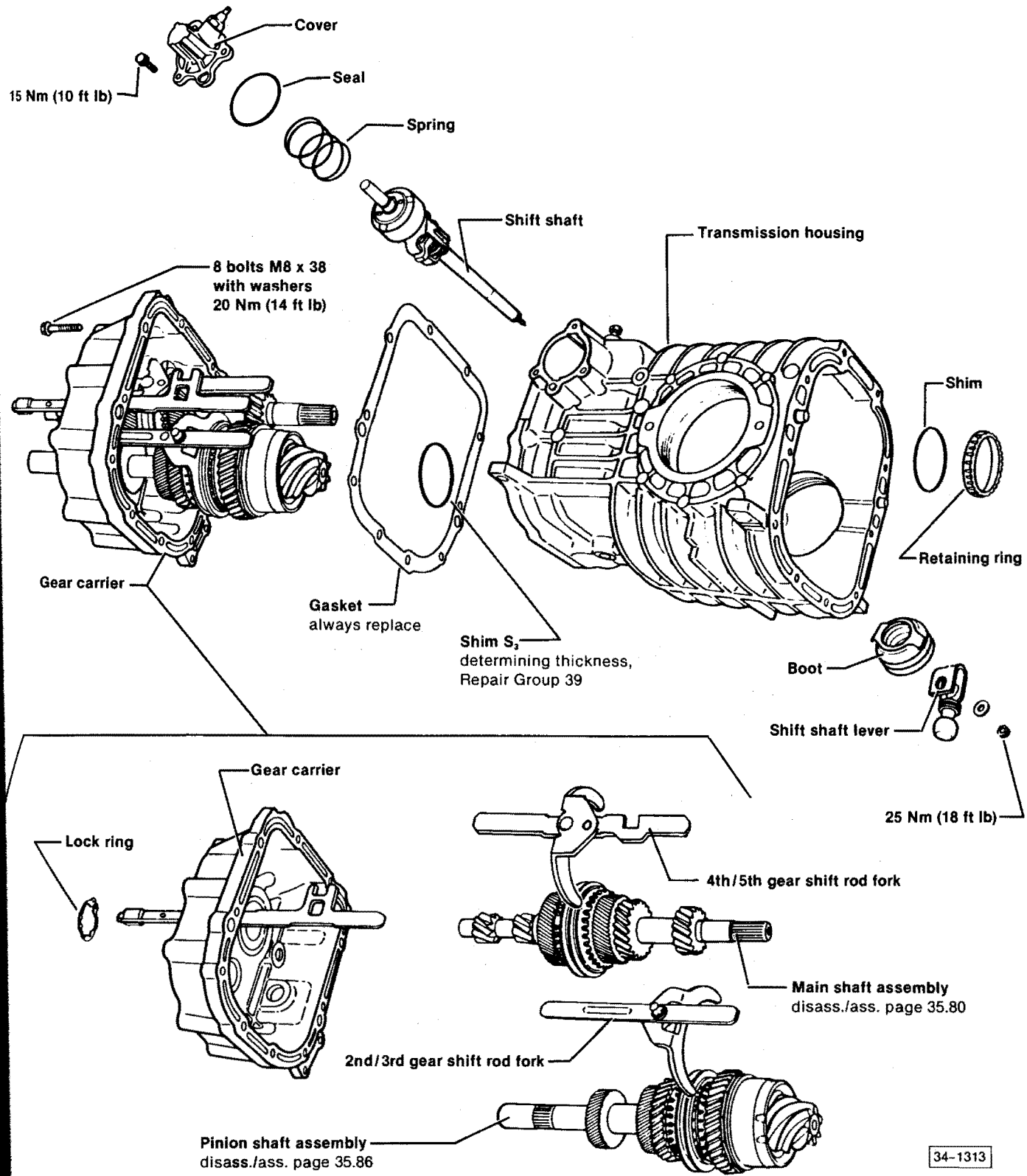
Cover
15 Nm (10 ft lb)
Seal
Spring
Shift shaft
Transmission housing
8 bolts M8 x 38
with washers
20 Nm (14 ft lb)
Shim
Retaining ring
Gear carrier
Gasket
always replace
Shim S3
determining thickness,
Repair Group 39
Boot
Shift shaft lever
25 Nm (18 ft lb)
Gear carrier
Lock ring
4th/5th gear shift rod fork
Main shaft assembly
disass./ass. page 35.80
2nd/3rd gear shift rod fork
Pinion shaft assembly
disass./ass. page 35.86
34-1313

Transmission

Disassembling

Work sequence

—remove coverplate
—remove shift shaft

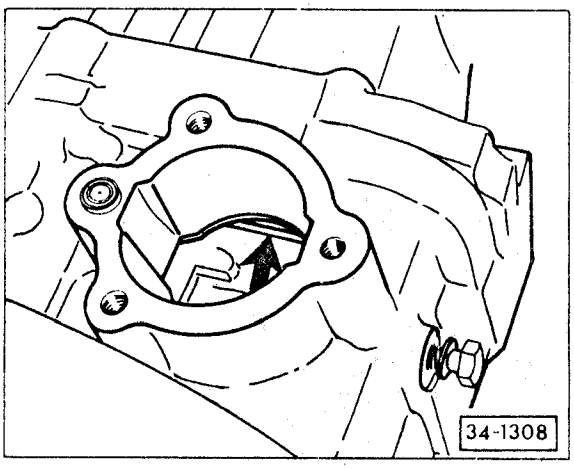

—loosen bolt until relay lever (arrow) can be pulled against housing
—tighten bolt to lock lever in that position

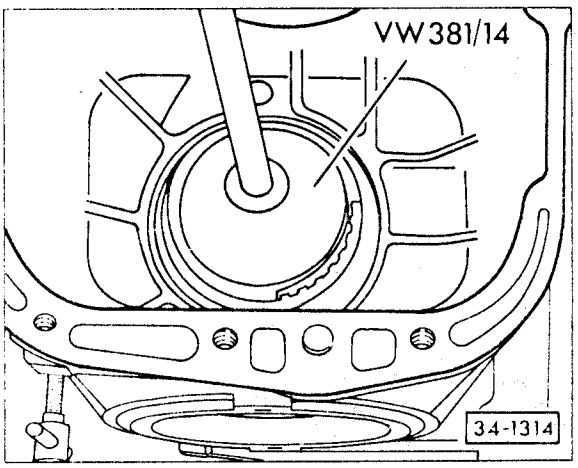

—remove retaining ring
—remove gear shift housing
—remove reverse gear shift rod and hub
—remove outer circlip

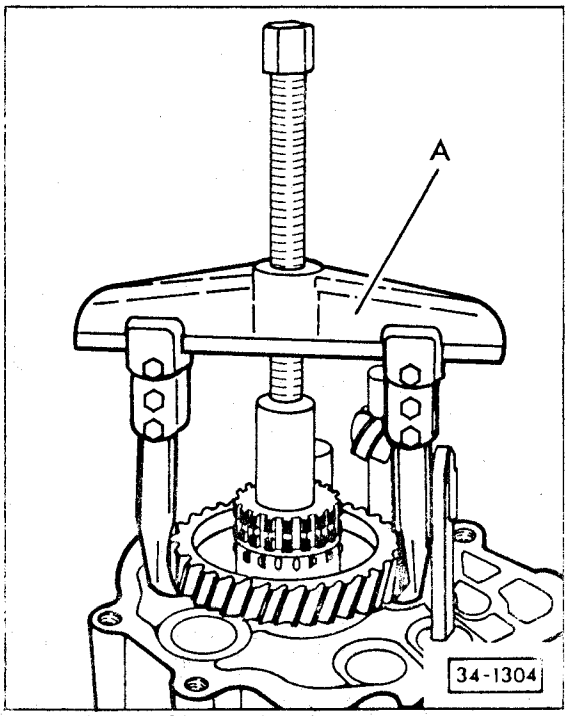

—pull off synchronizer hub and reverse gear
• **A**-puller US 1078
—remove inner circlip, washer and needle bearing
—remove reverse gear together with needle bearing and washer
—remove gear carrier housing bolts

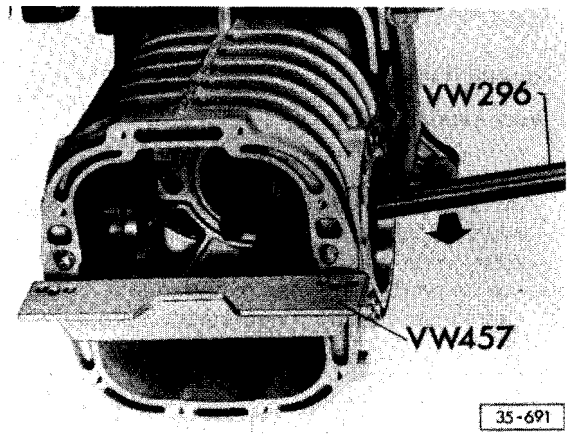

—to remove gear carrier attach VW 457 with two M8 x 20 bolts
—press gear carrier out with VW 296
—remove shim S_3 and note thickness

Note

If bearing and/or transmission housing are replaced, and dimension **r** is not marked on ring gear, pinion depth must be measured and noted **before** gear carrier is removed. This is dimension **r**. See Repair Group 39. When assembling, parts must be installed in same position. See Ring gear/pinion, adjusting, Repair Group 39

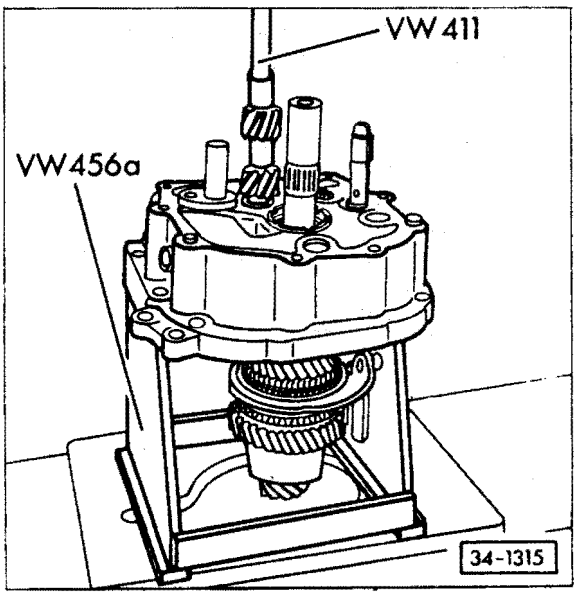

—press pinion shaft with main shaft and shift rod out of gear carrier

Assembling

Work sequence

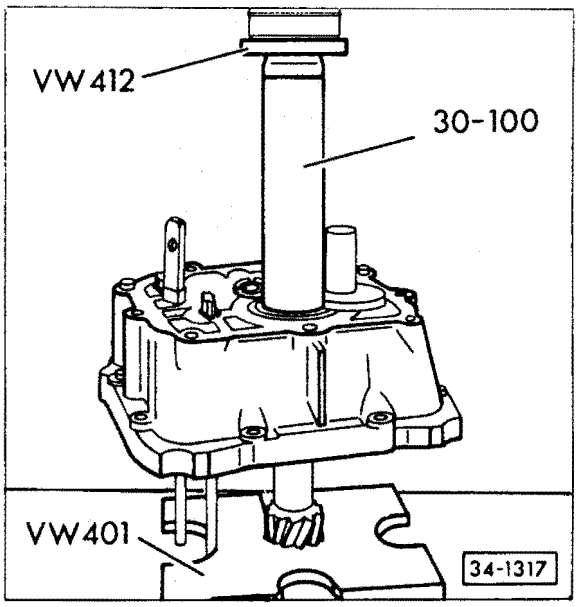

—press main shaft with shift rod into gear carrier

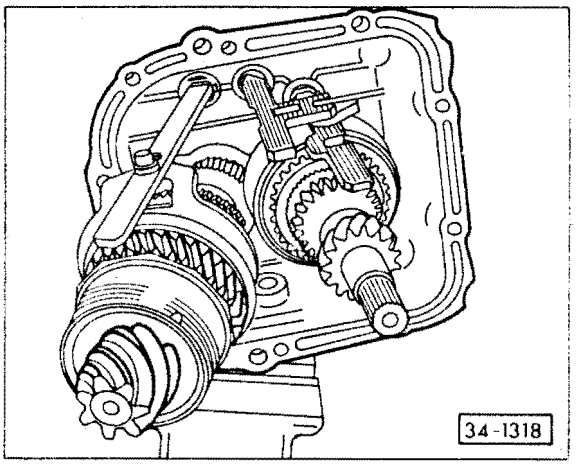

—install pinion shaft with shift rod
• shift into 4th gear
—shift into neutral
—install pinion shaft needle bearing

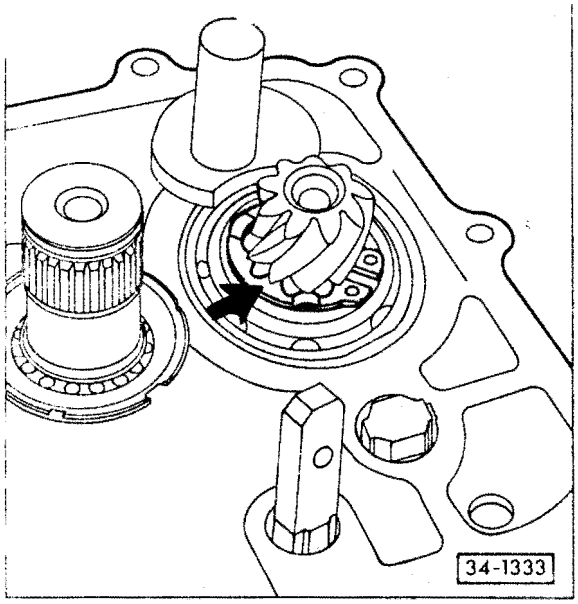

—install circlip
- make sure lugs of circlip are below teeth of pinion head (arrow)

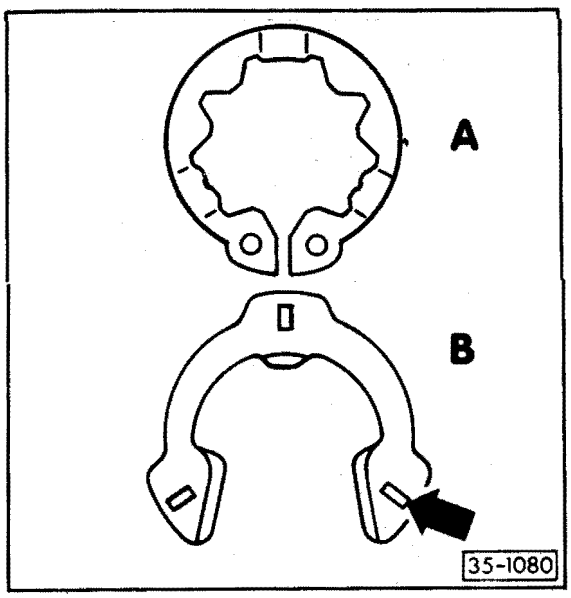

A = previous circlip
Part No. 091 311 381

B = new circlip
Part No. 091 311 381 A

Note

Use either type of circlip during repairs. The previous circlip will be discontinued when stock is used up.

CAUTION

Always replace the circlip during repairs.

Identifying marks on a new circlip (arrow) must face reverse gear splines.

Gear carrier

Assembling

Work sequence

—install shim S_3
—install new gasket
—align shift rod
—align flat on piston with recess in housing
—tap on pinion with plastic hammer to install
- make sure teeth of gears match properly

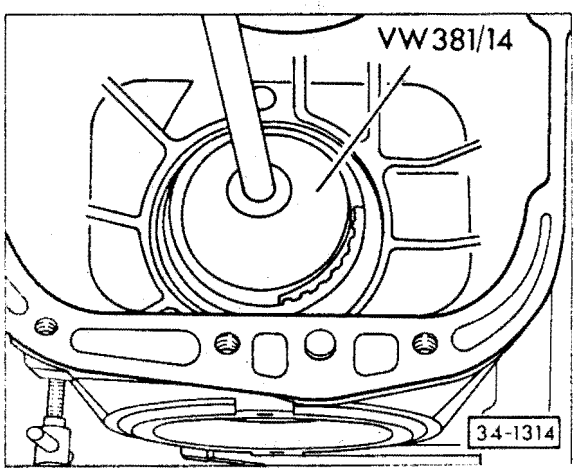

—install retaining ring and tighten to 225 Nm (162 ft lb), then loosen and retighten to 225 Nm (162 ft lb)

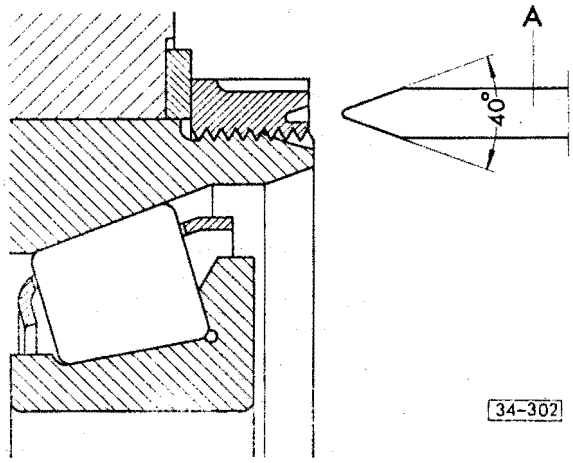

—peen retaining ring twice with suitable tool **A** (local manufacture)
—attach gear carrier to transmission housing and tighten bolts to 20 Nm (14 ft lb)

determining thickness of spacer for reverse gear

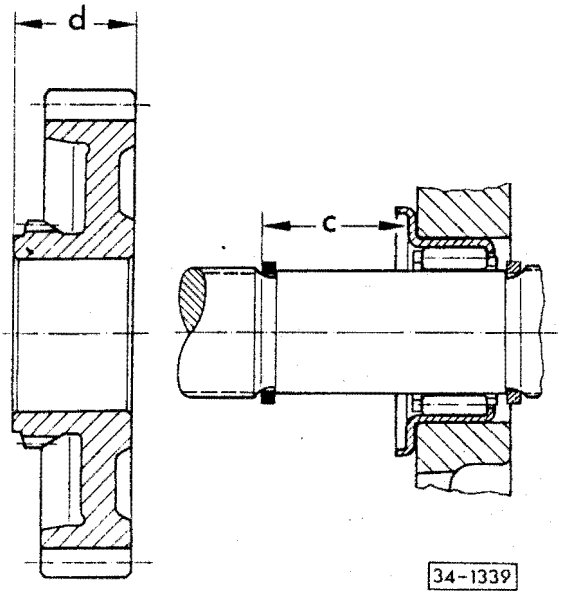

—install circlip
—measure distance **C**

Example

measurement **c**	29.1 mm
measurement **d**	– 24.7 mm
thickness of spacer	4.4 mm

thickness of spacers available

gap to be adjusted (mm)	Spare part no.	color
3.97–4.19	091 311 379	white
4.20–4.39	091 311 379 A	black
4.40–4.59	091 311 379 B	green
4.60–4.90	091 311 379 C	red

—install selected spacer, reverse gear, needle bearing and circlip

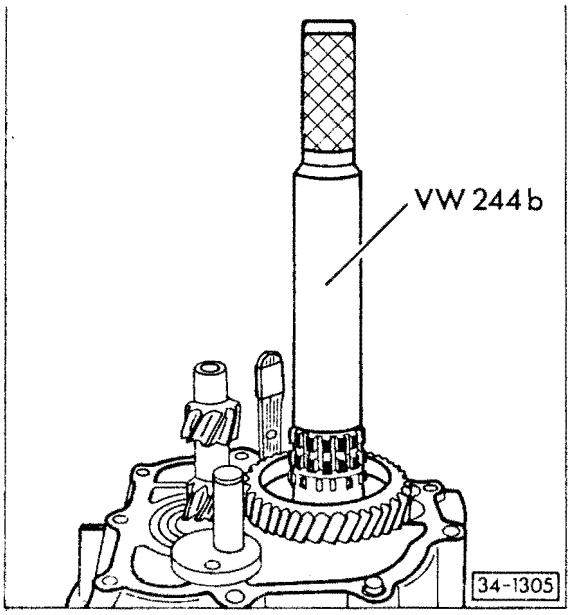

—install synchronizer
—install circlip
—install reverse gear
• groove in gear must face cover
—install needle bearing and washers
—install synchronizer for 1st/reverse gear and shift fork
• molybdenum coated side of synchronizer ring faces 1st gear
—install shift rod/fork bolt and tighten to 20 Nm (14 ft lb)
• before installing coat thread of bolt with D6-locking compound
—install 1st gear
—install needle bearing

Shim for 1st gear

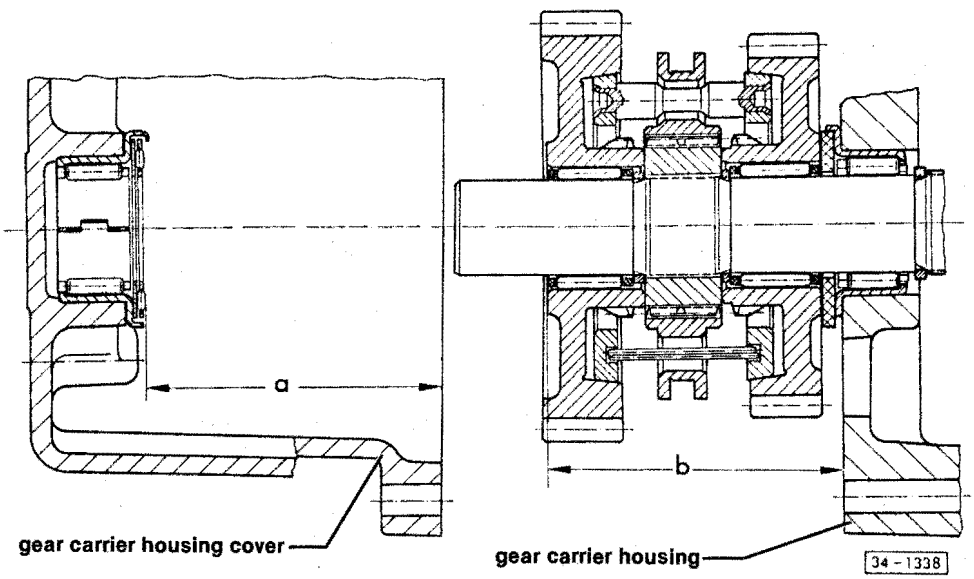

Determining thickness

Work sequence

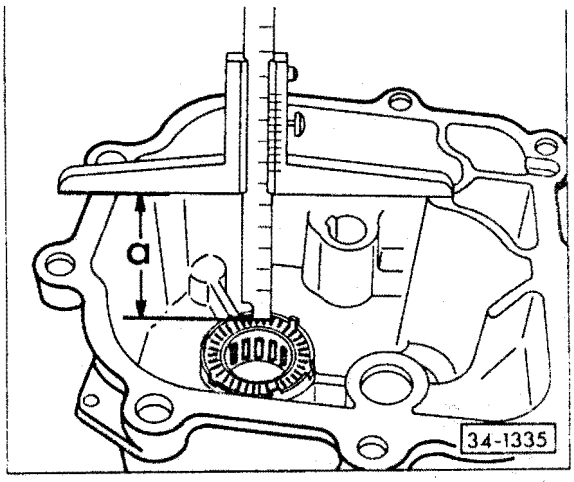

—measure depth **a**
Example: a = 77.8 mm

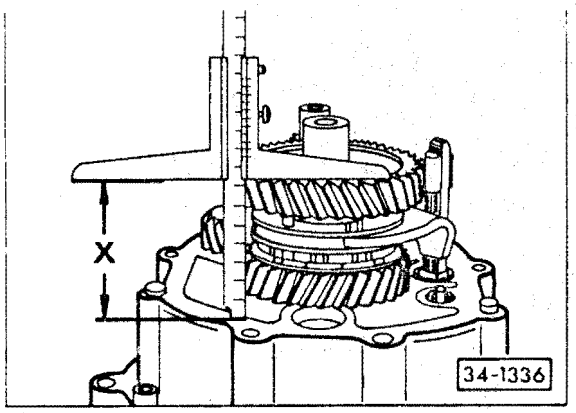

—measure distance **x**
Example: x = 77.6 mm

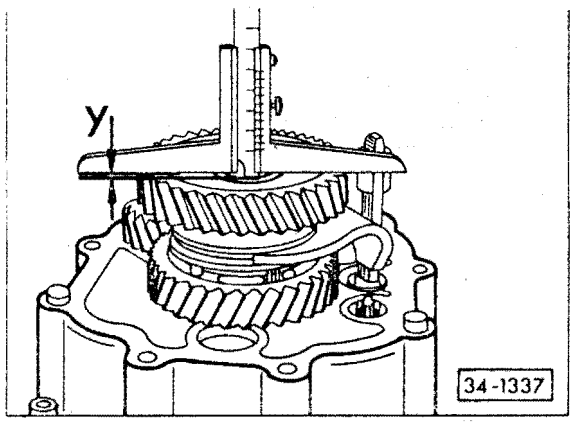

—measure distance **y**
Example y = 1.0 mm

b = x – y

Example:

b = 77.6 mm
– 1.0 mm
76.6 mm

Measurement = a – b

= 77.8 mm
– 76.6 mm
1.2 mm

Following shims are available:

Measurement (mm)	Shim thickness (mm)	Spare Part No.
0.95...1.14	0.6	094 311 379
1.15...1.34	0.8	094 311 379 A
1.35...1.54	1.0	094 311 379 B
1.55...1.74	1.2	094 311 379 C
1.75...1.94	1.4	094 311 379 D
1.95...2.14	1.6	094 311 379 E
2.15...2.47	1.8	094 311 379 F

—select correct shim
—install new gasket
—install cover
• align shaft and bore in cover
—tighten bolts to 20 Nm (14 ft lb)
—loosen relay lever bolt
—push lever into position and tighten bolt to 15 Nm (14 ft lb)
—install shift shaft
• slotted side toward differential housing
—install new gasket
—install spring
—install cover and tighten bolts to 15 Nm (10 ft lb)
—install back-up light switch
—install shift shaft lever

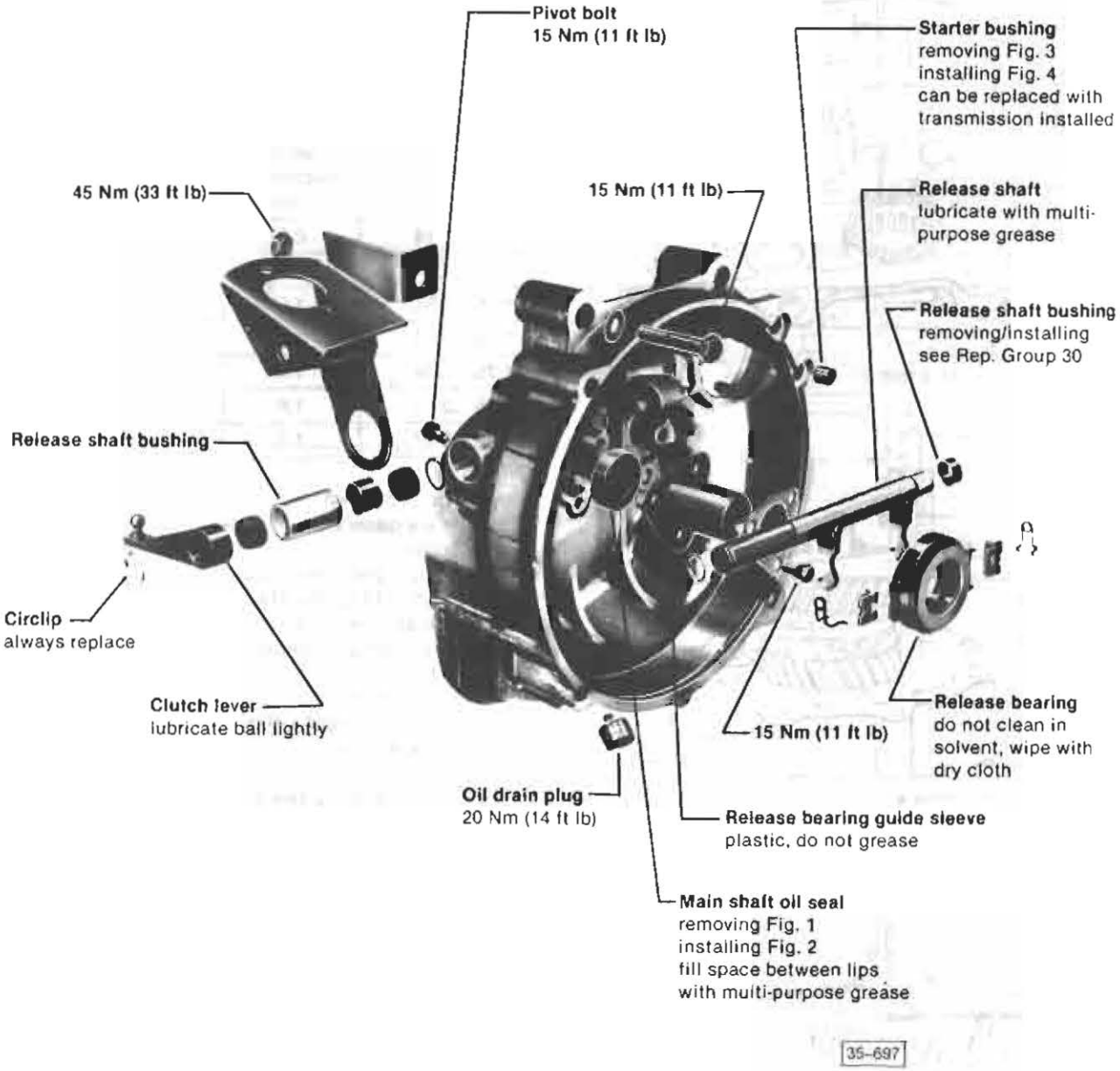
Pivot bolt
15 Nm (11 ft lb)
Starter bushing
removing Fig. 3
installing Fig. 4
can be replaced with
transmission installed
45 Nm (33 ft lb)
15 Nm (11 ft lb)
Release shaft
lubricate with multi-
purpose grease
Release shaft bushing
removing/installing
see Rep. Group 30
Release shaft bushing
Circlip
always replace
Clutch lever
lubricate ball lightly
15 Nm (11 ft lb)
Release bearing
do not clean in
solvent, wipe with
dry cloth
Oil drain plug
20 Nm (14 ft lb)
Release bearing guide sleeve
plastic, do not grease
Main shaft oil seal
removing Fig. 1
installing Fig. 2
fill space between lips
with multi-purpose grease
35-697

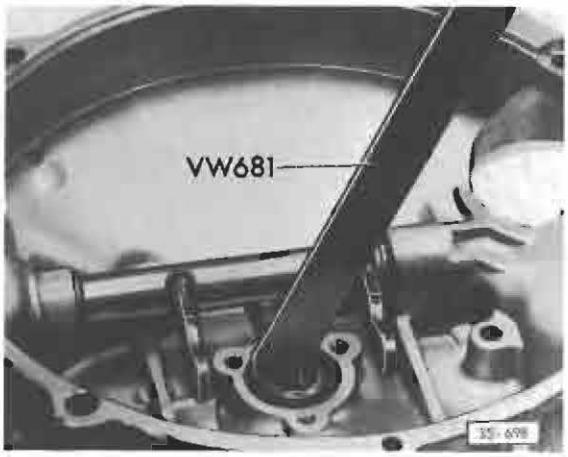

Fig. 1 Main shaft oil seal, removing

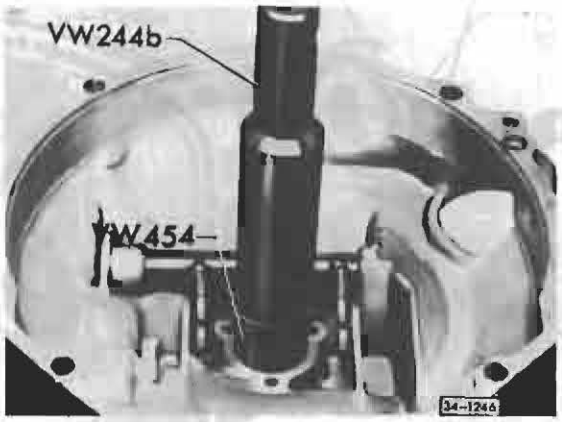

Fig. 2 Main shaft oil seal, installing

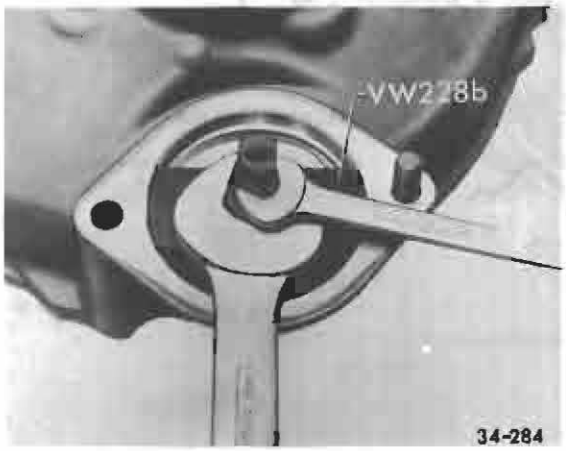

Fig. 3 Starter bushing, removing (transmission installed)

- when transmission is removed, use drift VW 222a



Fig. 4 Starter bushing, installing

—lubricate bushing and drive in flush

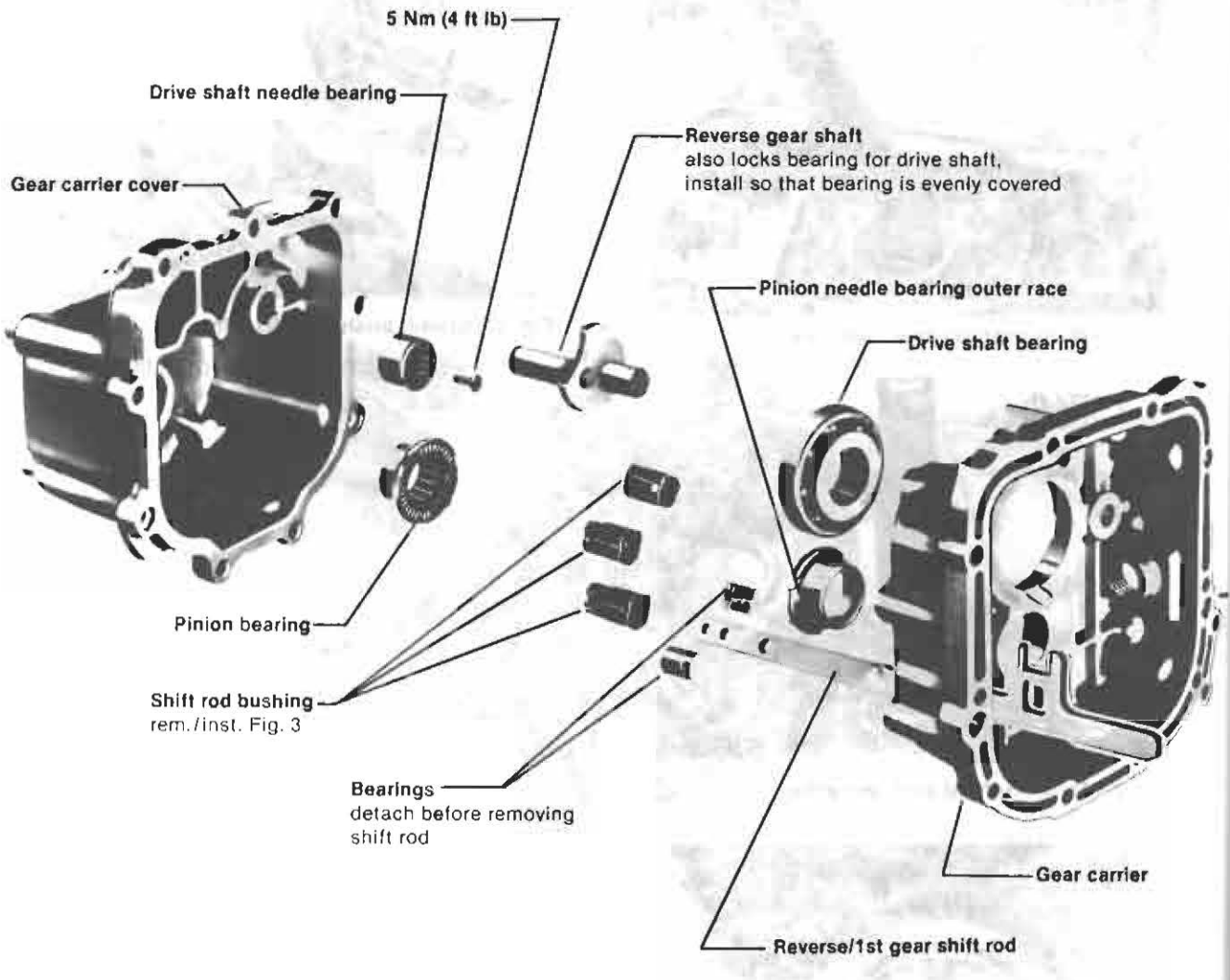
5 Nm (4 ft lb)
Drive shaft needle bearing
Reverse gear shaft
also locks bearing for drive shaft,
install so that bearing is evenly covered
Gear carrier cover
Pinion needle bearing outer race
Drive shaft bearing
Pinion bearing
Shift rod bushing
rem./inst. Fig. 3
Bearings
detach before removing
shift rod
Gear carrier
Reverse/1st gear shift rod

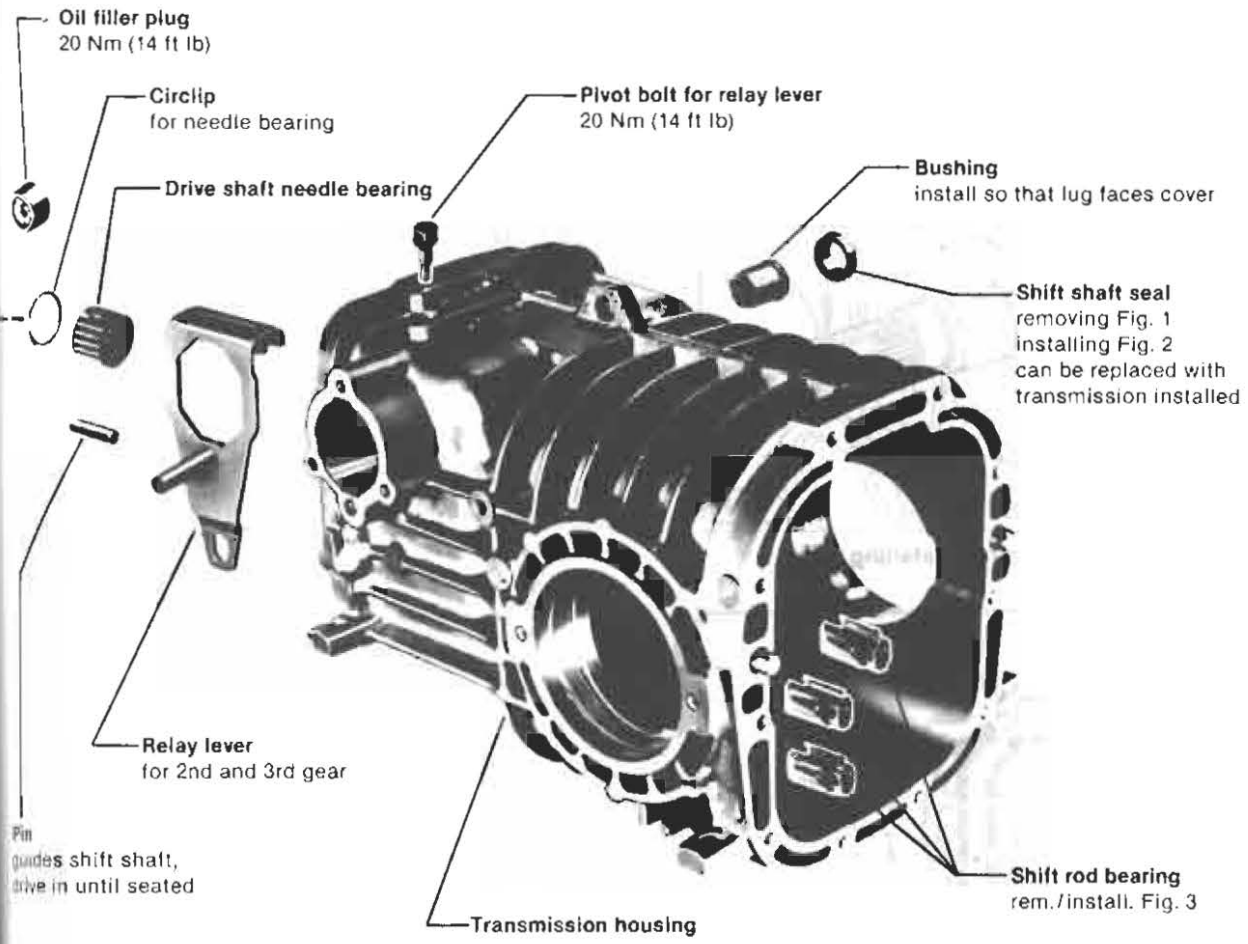
Oil filler plug
20 Nm (14 ft lb)
Circlip
for needle bearing
Drive shaft needle bearing
Pivot bolt for relay lever
20 Nm (14 ft lb)
Bushing
install so that lug faces cover
Shift shaft seal
removing Fig. 1
installing Fig. 2
can be replaced with
transmission installed
Relay lever
for 2nd and 3rd gear
Pin
guides shift shaft,
drive in until seated
Transmission housing
Shift rod bearing
rem./install. Fig. 3

34-1320

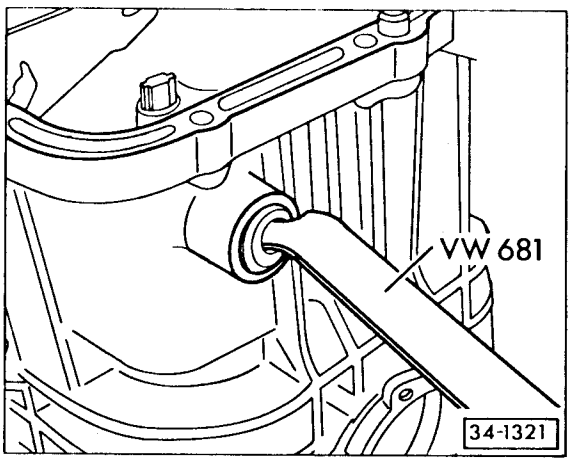

Fig. 1 Shift shaft oil seal, removing

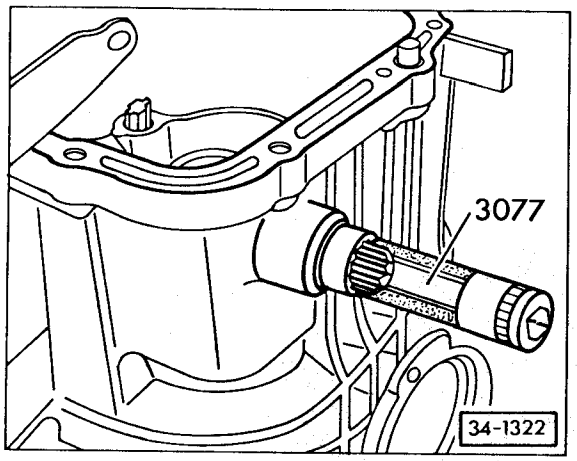

Fig. 2 Shift shaft oil seal, installing

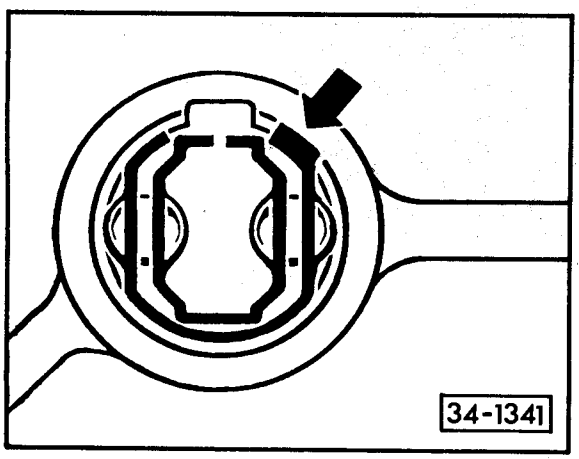

Fig. 3 Shift rod bushing

—removing
- turn bearing so that lug (arrow) is in recess of housing and press out

—installing
- align bearing and rod

THIS PAGE INTENTIONALLY
LEFT BLANK

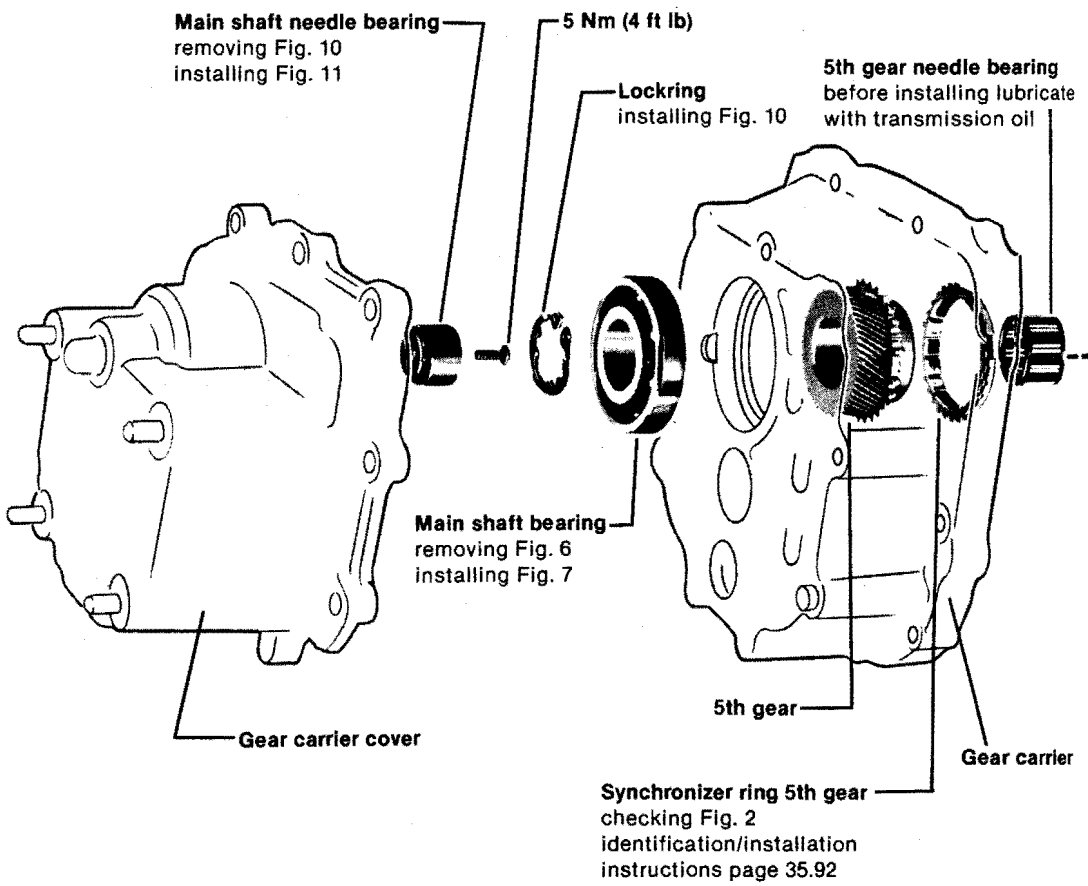
Main shaft needle bearing
removing Fig. 10
installing Fig. 11
5 Nm (4 ft lb)
Lockring
installing Fig. 10
5th gear needle bearing
before installing lubricate
with transmission oil
Main shaft bearing
removing Fig. 6
installing Fig. 7
Gear carrier cover
5th gear
Gear carrier
Synchronizer ring 5th gear
checking Fig. 2
identification/installation
instructions page 35.92

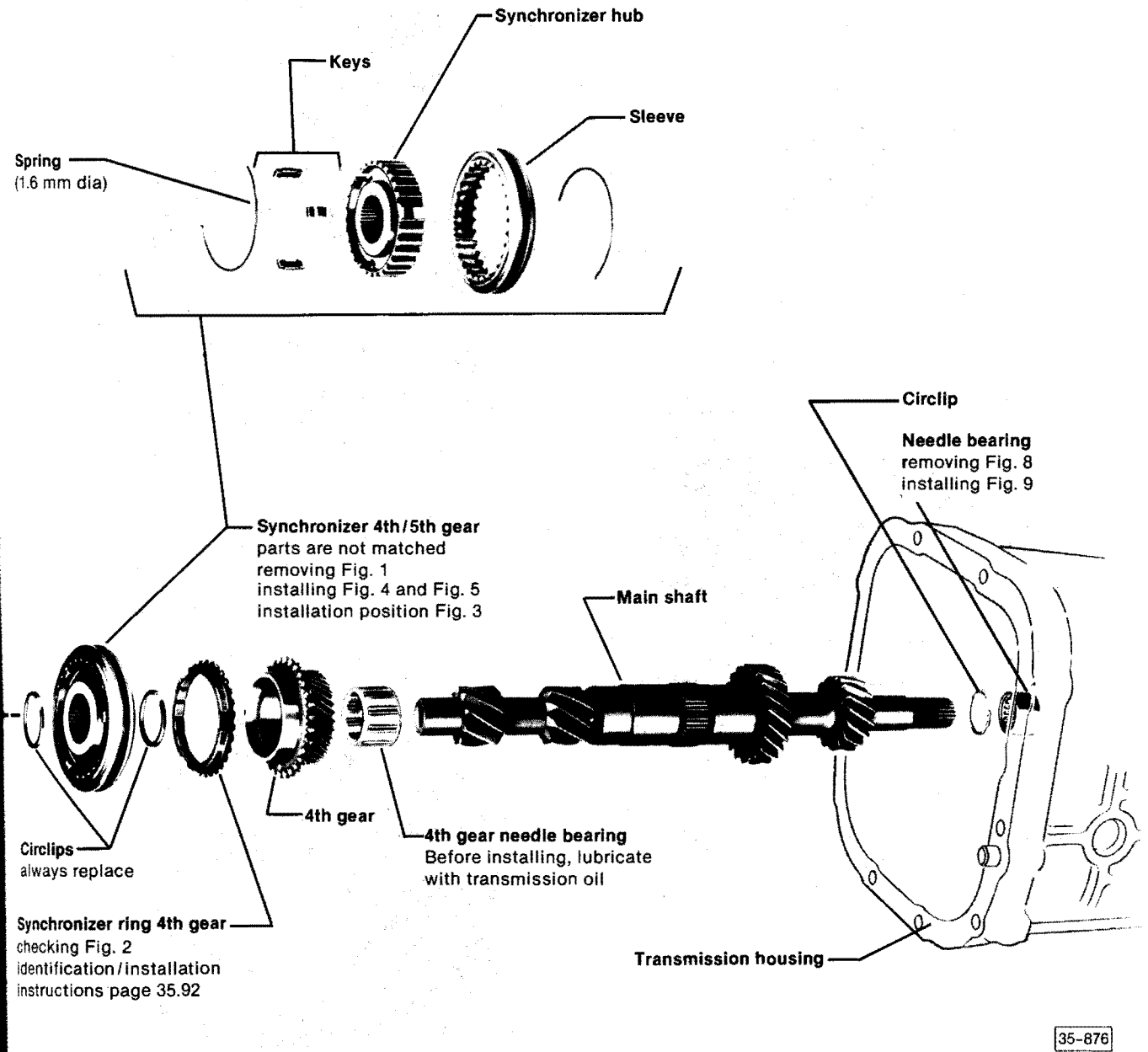
Synchronizer hub
Keys
Sleeve
Spring
(1.6 mm dia)
Circlip
Needle bearing
removing Fig. 8
installing Fig. 9
Synchronizer 4th/5th gear
parts are not matched
removing Fig. 1
installing Fig. 4 and Fig. 5
installation position Fig. 3
Main shaft
4th gear
4th gear needle bearing
Before installing, lubricate
with transmission oil
Circlips
always replace
Synchronizer ring 4th gear
checking Fig. 2
identification/installation
instructions page 35.92
Transmission housing
35-876

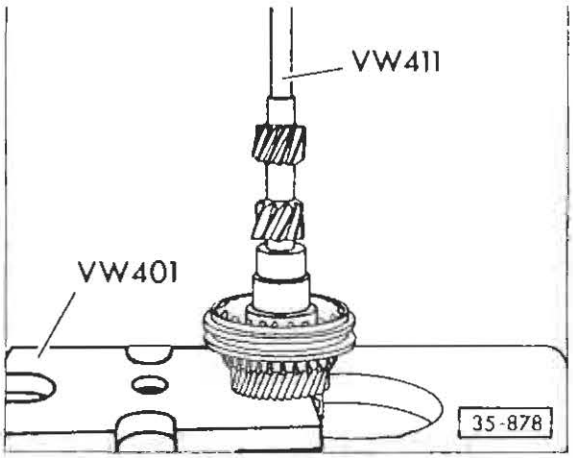

Fig. 1 Synchronizer, removing

—press off together with gear

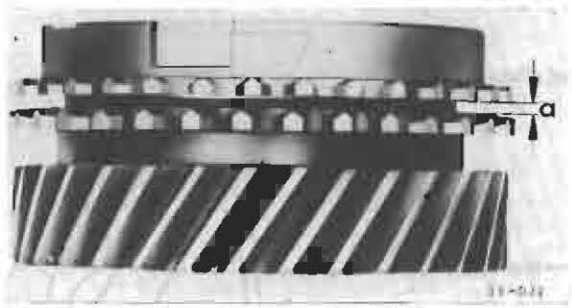

Fig. 2 Synchronizer rings, checking

—press synchronizer rings onto gear by hand and measure gap a with feeler gauge

Gap a

Gear	New Part mm (in.)	Wear limit mm (in.)
4th/5th	1.0–1.7 (0.039–0.067)	0.5 (0.020)

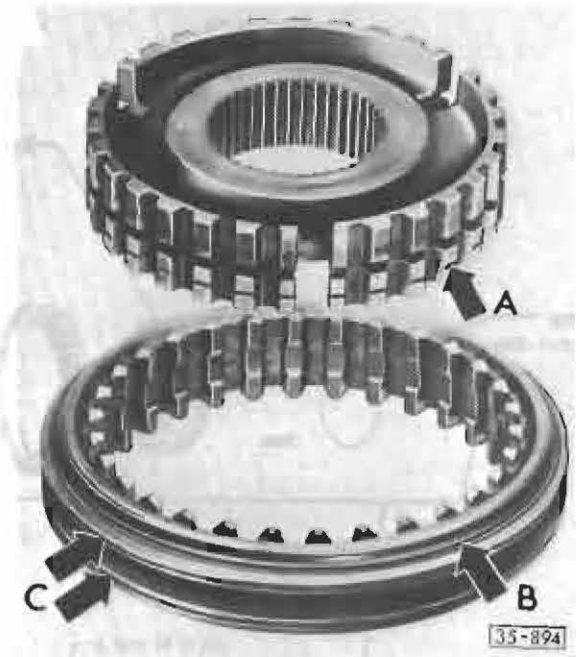

Fig. 3 Synchronizer 4th/5th gear, assembling

- identification grooves (arrows A & B) of sleeve and hub are on opposite sides. Groove on sleeve (arrow B) faces 4th gear
- grooves (arrow C) are for identification: 2nd & 3rd gear = 1 groove 4th & 5th gear = 2 grooves

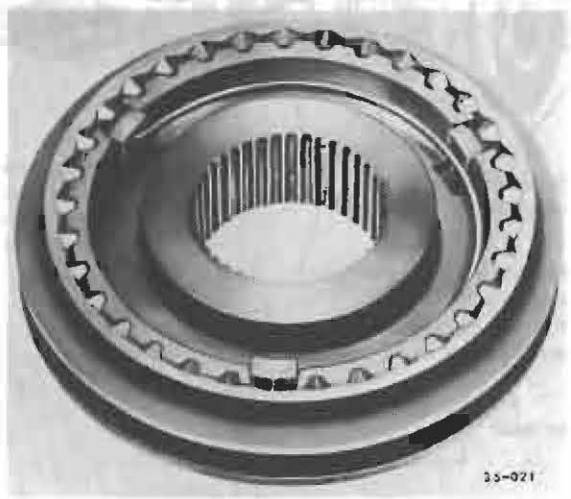

Fig. 4 Synchronizer 4th/5th gear, assembling

—slide sleeve over synchronizer hub. Matched position is not necessary

—insert keys and install springs with ends offset 120°. Angled ends of springs must fit into keys

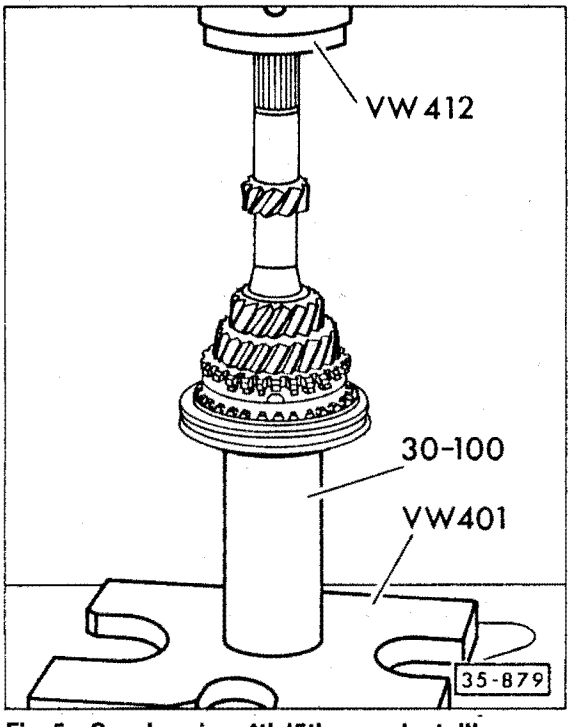

Fig. 5 Synchronizer 4th/5th gear, installing

—turn synchronizer ring until grooves are in line with keys
- identification groove on sleeve (Fig. 3, arrow B) faces 4th gear

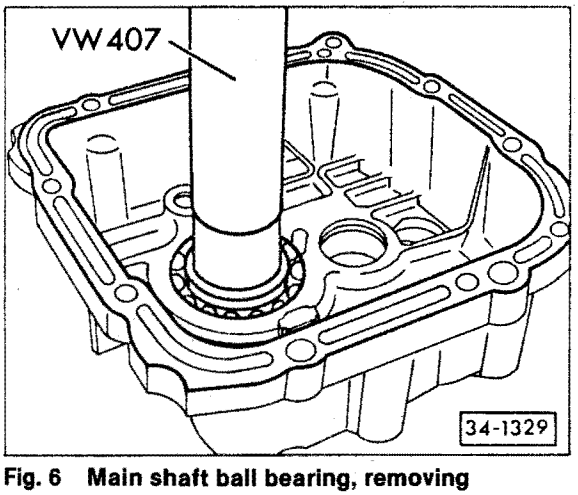

Fig. 6 Main shaft ball bearing, removing

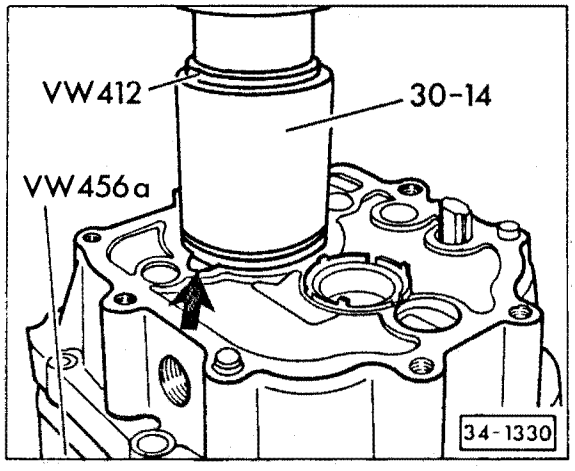

Fig. 7 Main shaft ball bearing, installing

—press in so that recess in bearing is aligned with recess (arrow) in housing

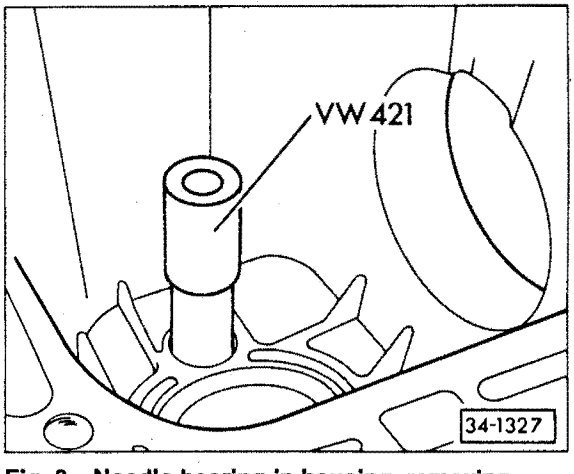

Fig. 8 Needle bearing in housing, removing

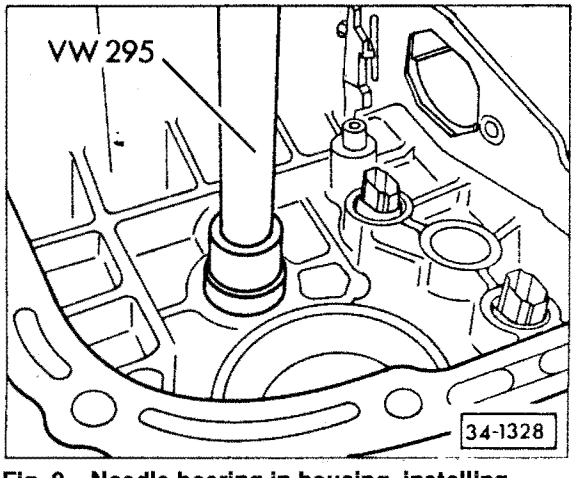

Fig. 9 Needle bearing in housing, installing

- lettered side of bearing (thicker material) must face installing tool

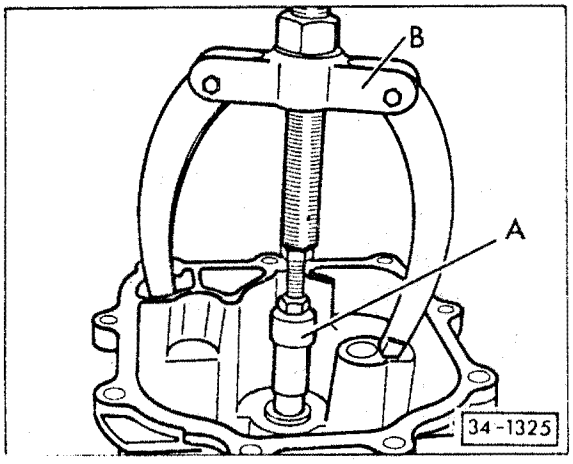

Fig. 10 Main shaft needle bearing in gear carrier housing cover, removing

—remove screw
—pull bearing out with
A—extractor US 1088
B—puller US 1039

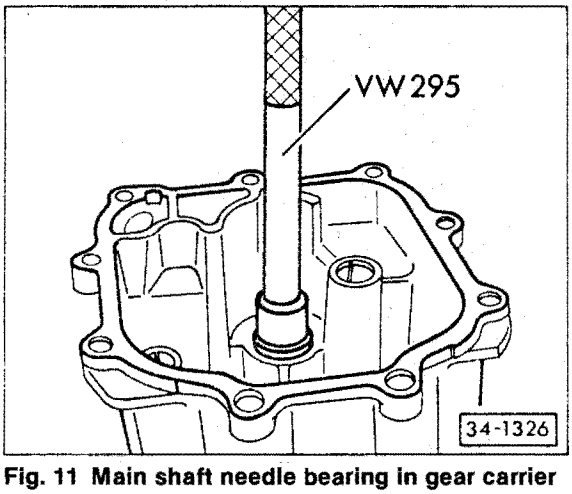

Fig. 11 Main shaft needle bearing in gear carrier housing cover, installing

—tighten screw to 5 Nm (4 ft lb)

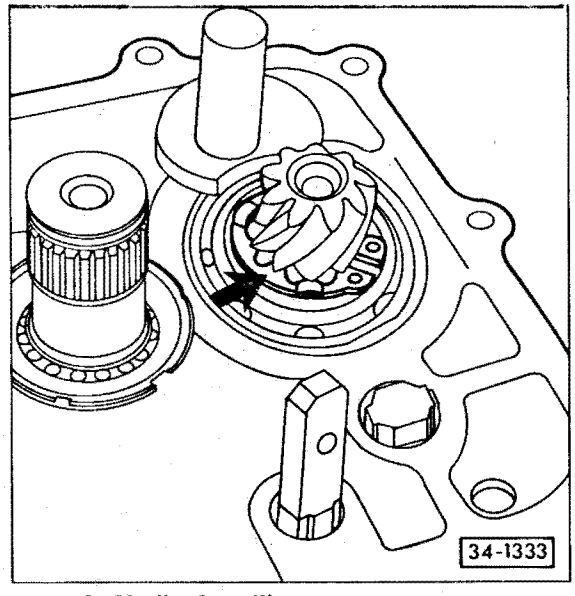

Fig. 12 Circlip, installing

• make sure ring is seated correctly (arrow)

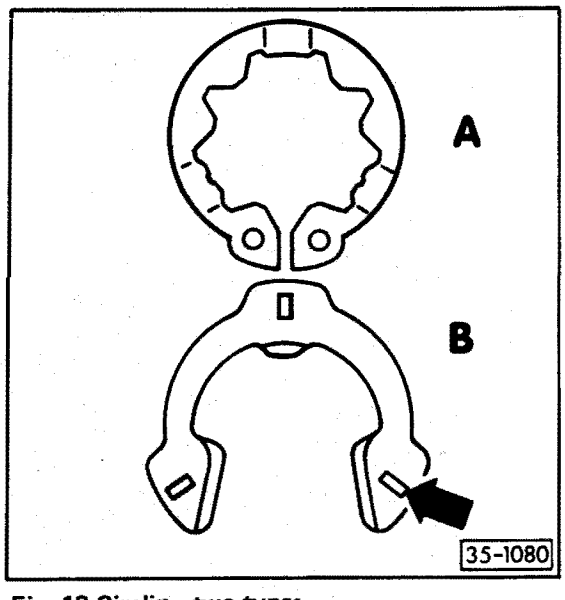

Fig. 13 Circlip, two types

A = previous circlip
Part No. 091 311 381

B = new circlip
Part No. 091 311 38

CAUTION

Always replace the circlip during repairs.

Identifying marks on a new circlip (arrow) must face reverse gear splines.



rectly

A

B

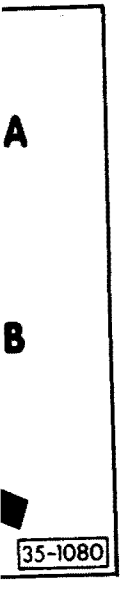

circlip
No. 091 311 38

rs.
row)

THIS PAGE INTENTIONALLY
LEFT BLANK

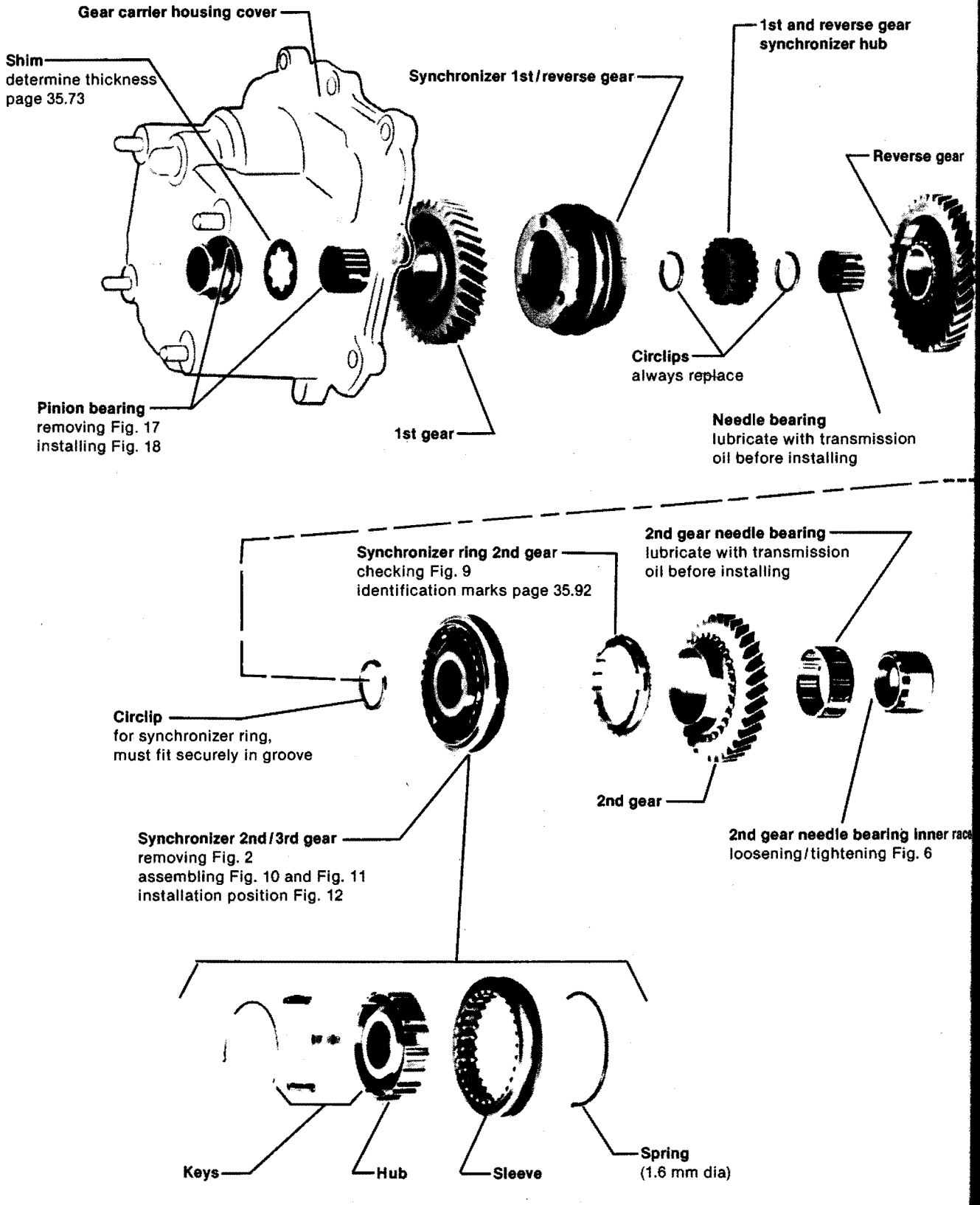
Gear carrier housing cover
Shim
determine thickness
page 35.73
Synchronizer 1st/reverse gear
1st and reverse gear
synchronizer hub
Reverse gear
Circlips
always replace
Pinion bearing
removing Fig. 17
installing Fig. 18
1st gear
Needle bearing
lubricate with transmission
oil before installing
Synchronizer ring 2nd gear
checking Fig. 9
identification marks page 35.92
2nd gear needle bearing
lubricate with transmission
oil before installing
Circlip
for synchronizer ring,
must fit securely in groove
2nd gear
Synchronizer 2nd/3rd gear
removing Fig. 2
assembling Fig. 10 and Fig. 11
installation position Fig. 12
2nd gear needle bearing inner race
loosening/tightening Fig. 6
Keys
Hub
Sleeve
Spring
(1.6 mm dia)

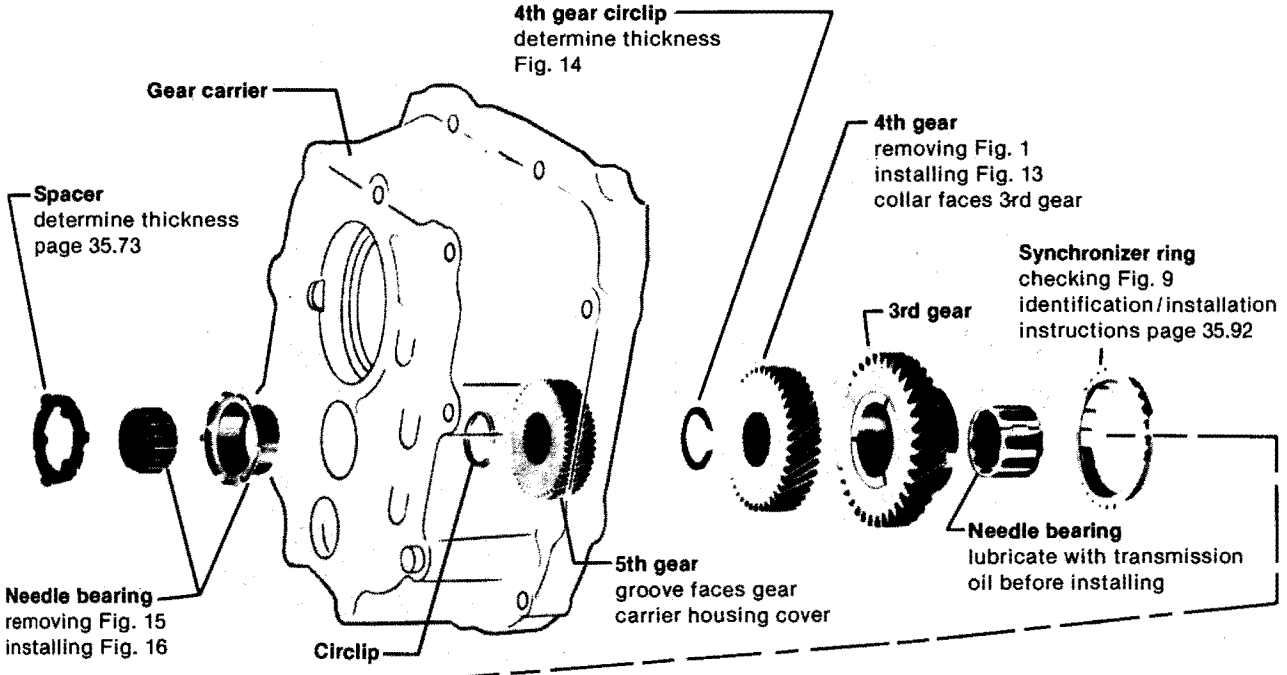
4th gear circlip
determine thickness
Fig. 14
Gear carrier
Spacer
determine thickness
page 35.73
4th gear
removing Fig. 1
installing Fig. 13
collar faces 3rd gear
Synchronizer ring
checking Fig. 9
identification/installation
instructions page 35.92
3rd gear
Needle bearing
lubricate with transmission
oil before installing
Needle bearing
removing Fig. 15
installing Fig. 16
Circlip
5th gear
groove faces gear
carrier housing cover

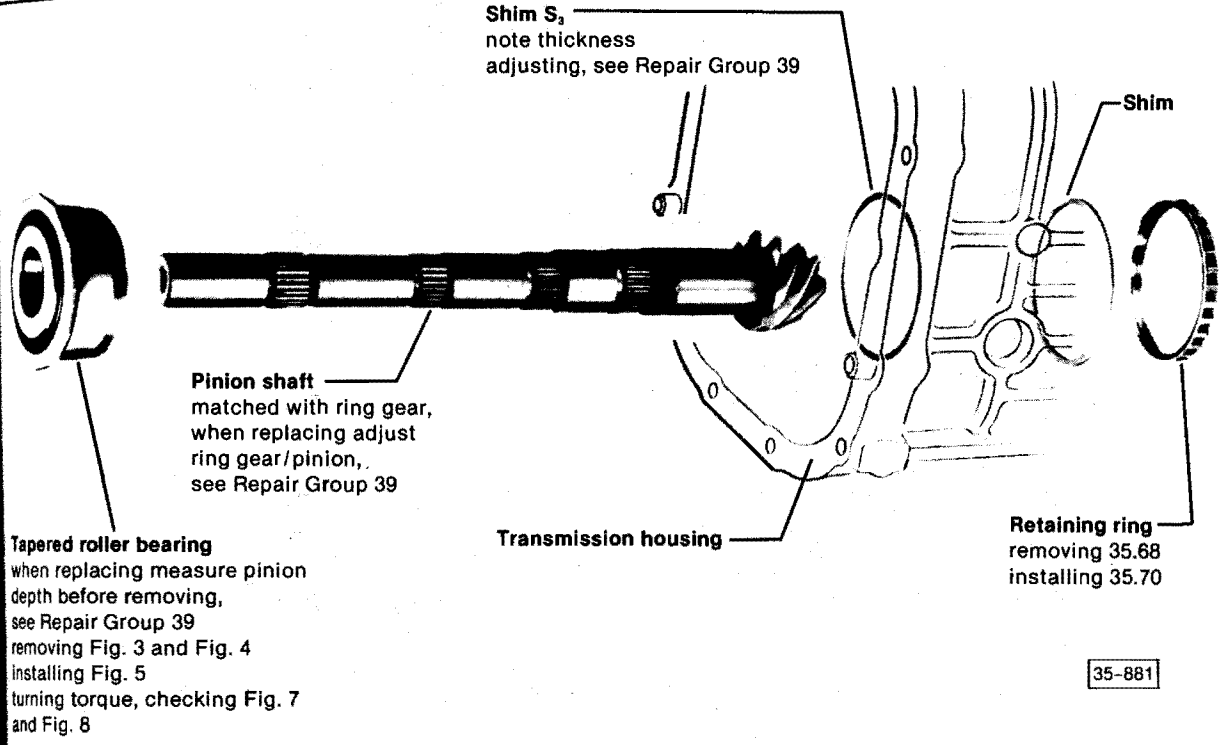
Shim S_3
note thickness
adjusting, see Repair Group 39
Shim
Pinion shaft
matched with ring gear,
when replacing adjust
ring gear/pinion,
see Repair Group 39
Tapered roller bearing
when replacing measure pinion
depth before removing,
see Repair Group 39
removing Fig. 3 and Fig. 4
installing Fig. 5
turning torque, checking Fig. 7
and Fig. 8
Transmission housing
Retaining ring
removing 35.68
installing 35.70

35-881

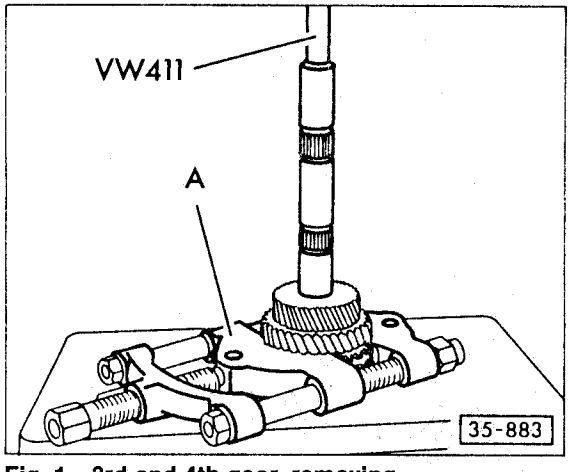

Fig. 1 3rd and 4th gear, removing

A—US 1103

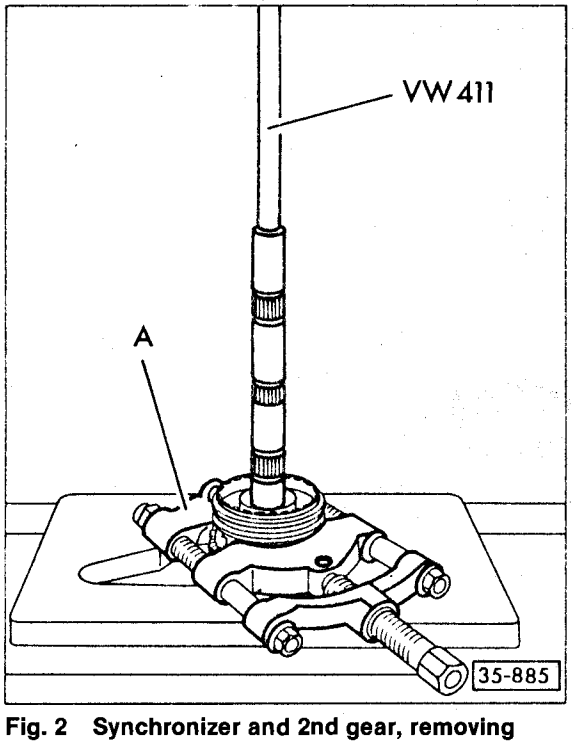

Fig. 2 Synchronizer and 2nd gear, removing

A—US 1103

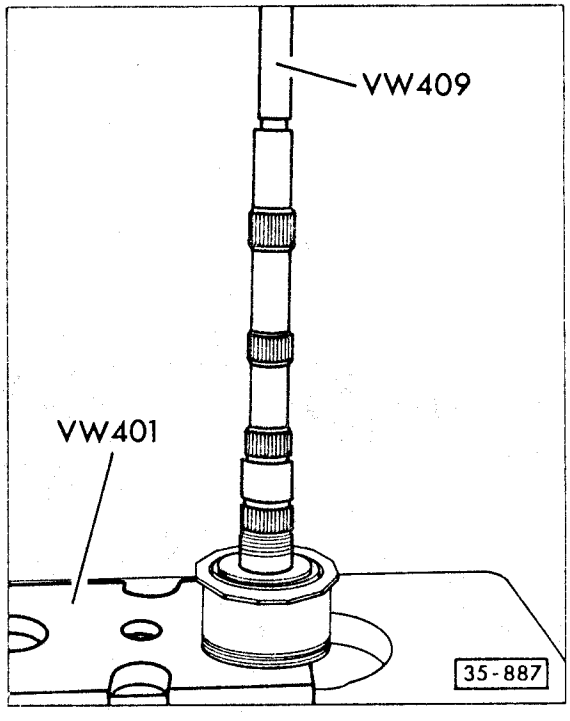

Fig. 3 Tapered roller bearing, removing

—remove retaining ring first

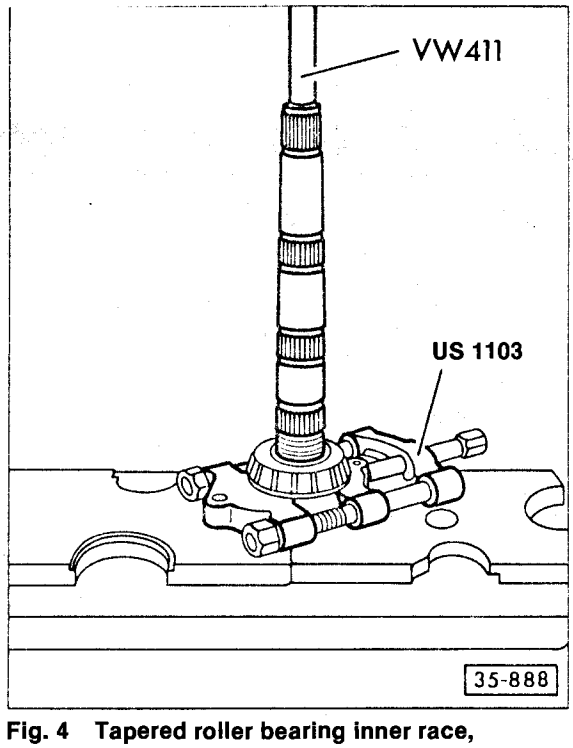

Fig. 4 Tapered roller bearing inner race, removing

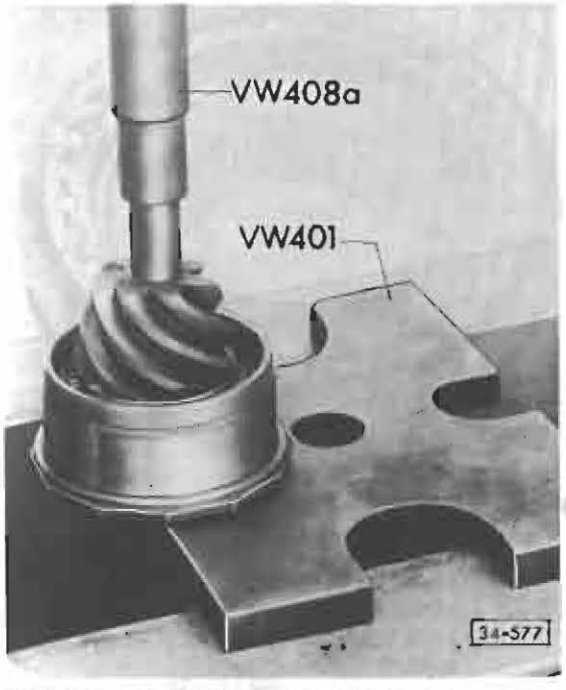

Fig. 5 Tapered roller bearing, installing

—heat inner race to about 100°C (212°F) and press on
—before tightening needle bearing inner race, let tapered roller bearing cool to room temperature

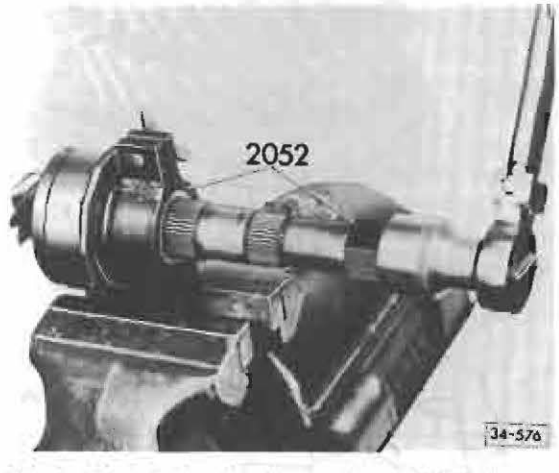

Fig. 6 Needle bearing, loosening/tightening

—heat inner race to about 60°C (140°F) and screw on as far as possible by hand
—place pinion shaft in tool 2052 and tighten wing nut lightly
—tighten inner race to 210 Nm (152 ft lb)

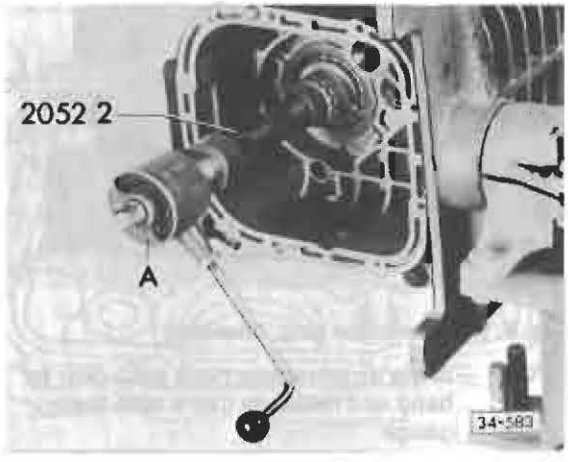

Fig. 7 Tapered roller bearing, checking turning torque

—lubricate bearings with transmission oil and tighten retaining ring,
—turn pinion shaft in both directions about 15–20 times
—turn further and read turning torque
- new bearings: up to 210 Ncm **(180 in. lb)**
- used bearings*: up to 70 Ncm **(61 in. lb)** (*after running at least 30 miles)
- if no turning torque can be measured, see Fig. 8

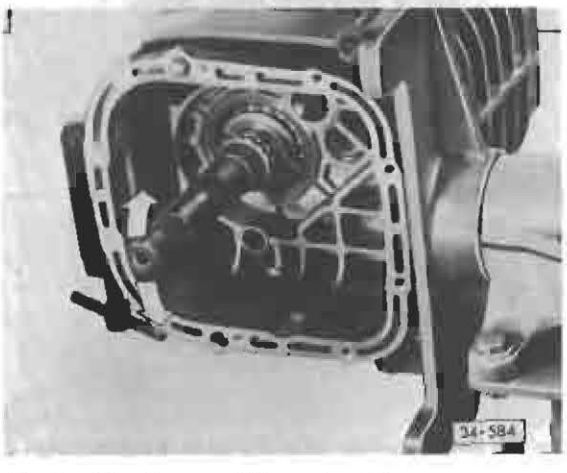

Fig. 8 Bearing condition, checking

—check for rock at end of pinion. There must not be any detectable movement
if **YES**, replace tapered roller bearing

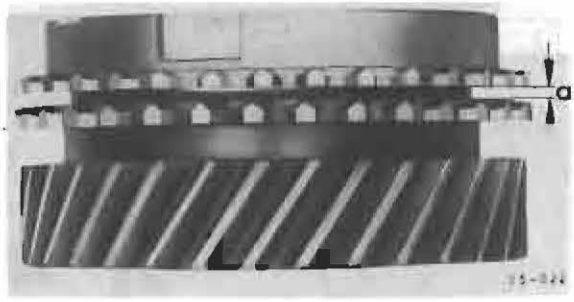

Fig. 9 Synchronizer ring, checking

—press synchronizer rings onto gear by hand and measure gap **a** with feeler gauge

	New Part mm (in.)	Wear limit mm (in.)
Gap **a**	1.3–1.9 (0.051–0.075)	0.5 (0.020)

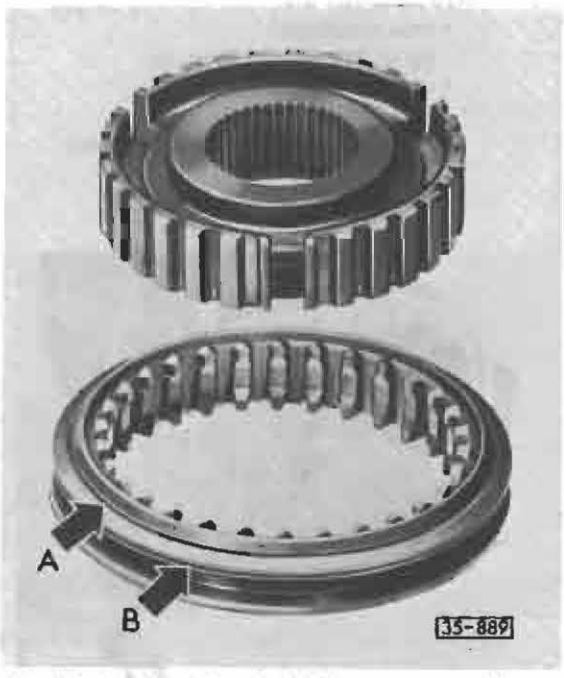

Fig. 10 Synchronizer 2nd/3rd gear, assembling

—groove (arrow A) must face 3rd gear
—collar on hub must face 2nd gear
—grooves (arrow B) are for identification:
- 2nd gear & 3rd gear = 1 groove
- 4th gear & 5th gear = 2 grooves

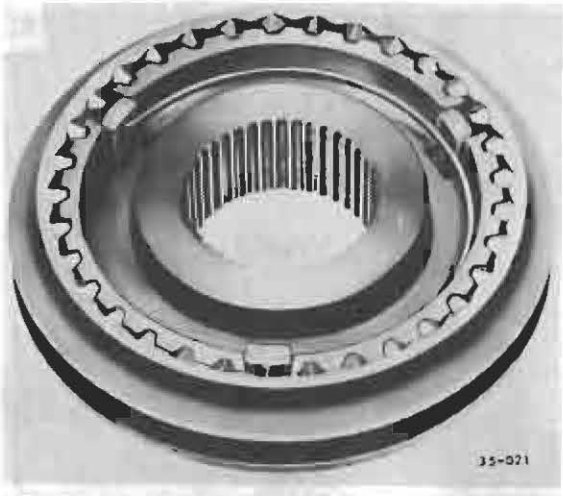

Fig. 11 Synchronizer, assembling

—slide sleeve over synchronizer hub. Matched position is not necessary
—insert keys and install springs with ends offset 120°. Angled ends of springs must fit into keys

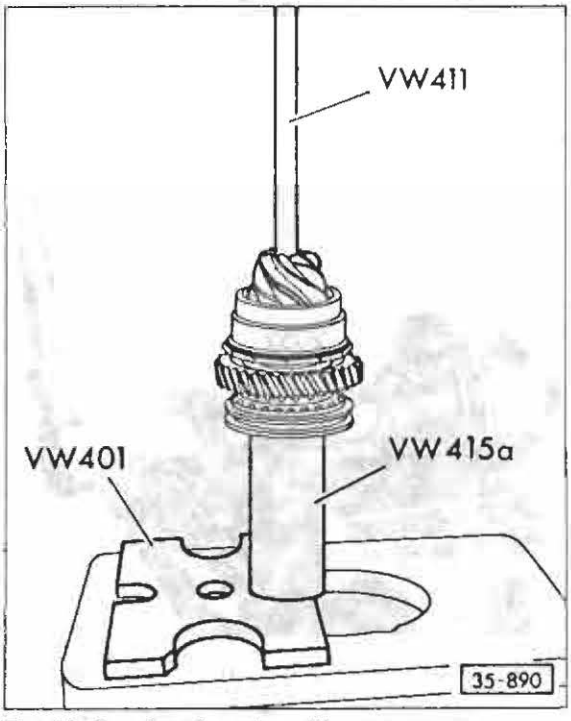

Fig. 12 Synchronizer, installing

—turn synchronizer ring until grooves are in line with keys (installation position, see Fig. 10)

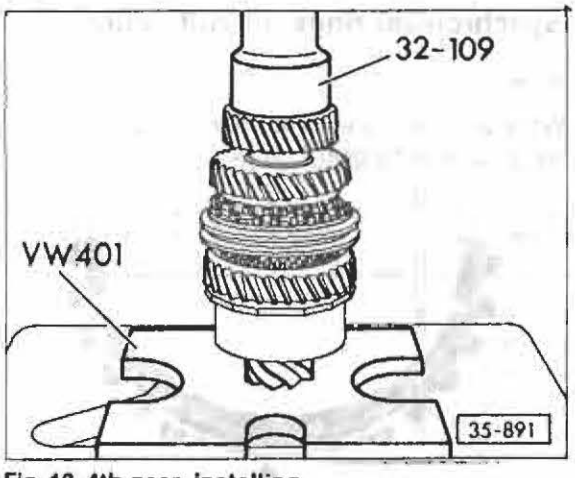

Fig. 13 4th gear, installing

—collar must face 3rd gear

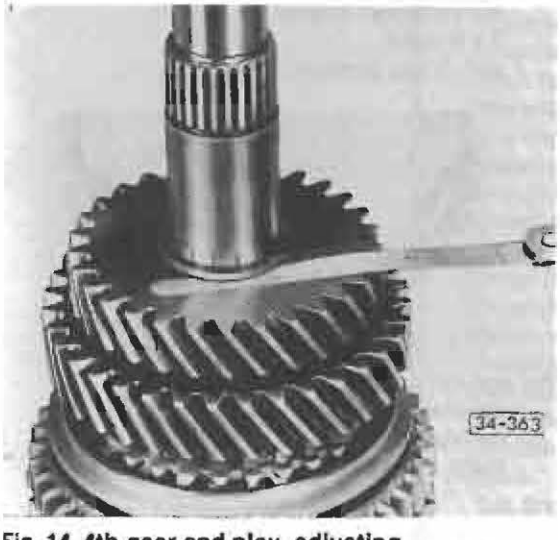

Fig. 14 4th gear end play, adjusting

—measure end play with feeler gauge
—adjust by selecting suitable circlip
• play should be 0.05 mm–0.20 mm (try to keep lower limit)

Circlips available:

Thickness mm	Color	Part No.
1.60	black	113 311 382
1.75	blue	113 311 383
1.90	brown	113 311 384
2.05	gray	113 311 385
2.20	copper	113 311 386
2.30	brass	113 311 387
2.40	silver	113 311 388

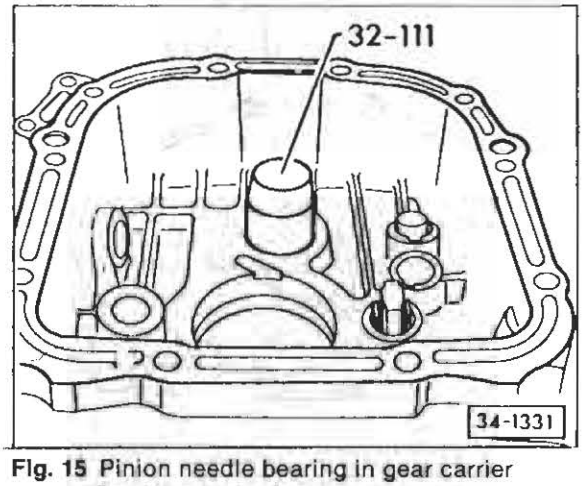

Fig. 15 Pinion needle bearing in gear carrier housing, removing

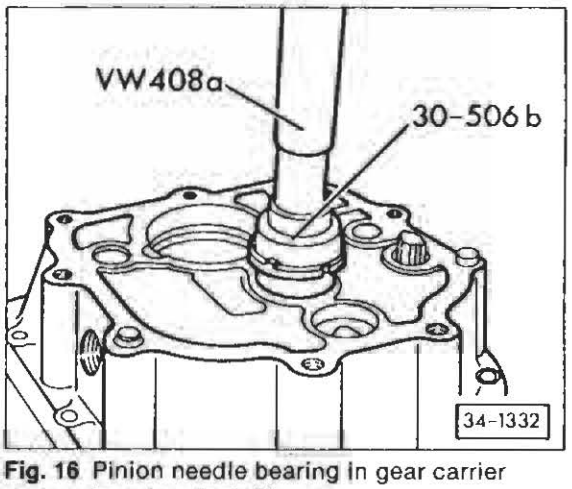

Fig. 16 Pinion needle bearing in gear carrier housing, installing

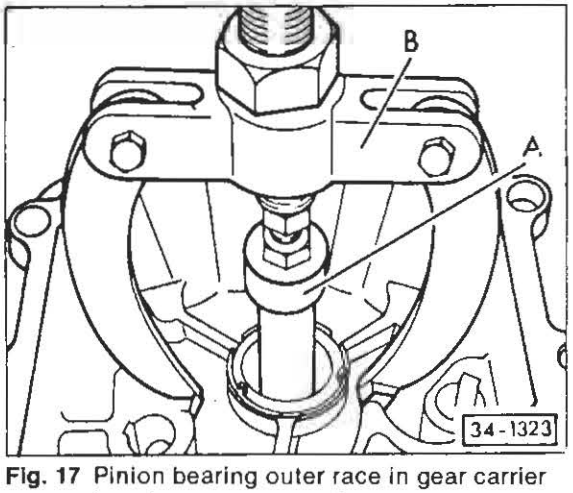

Fig. 17 Pinion bearing outer race in gear carrier housing cover, removing

A—extractor US 1088
B—puller US 1039

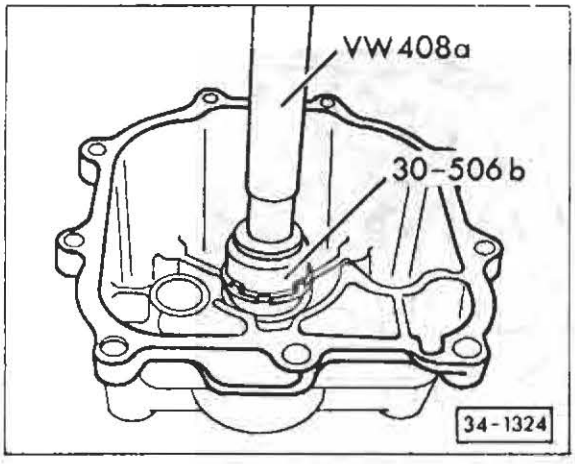

Fig. 18 Pinion bearing in gear carrier housing cover, installing

Synchronizer rings, identification

Note

When assembling transmission, install synchronizer ring to same gear from which it was removed

production

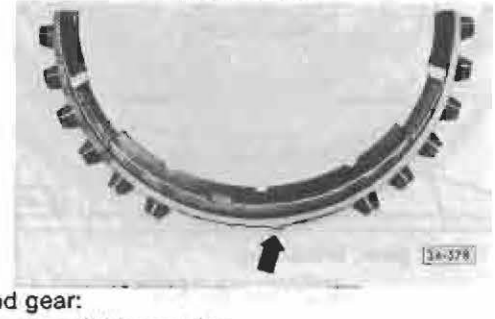

2nd gear:
special brass ring
molybdenum coated
3 x 6 teeth
with 3 lips (arrow)

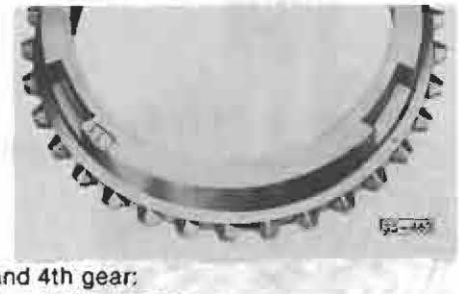

3rd and 4th gear:
special brass ring
molybdenum coated
teeth all around circumference

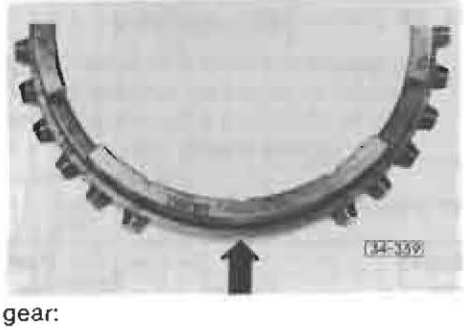

5th gear:
brass ring
3 x 8 teeth
with 3 notches (arrow)

spare part

For all gears install ring (3rd and 4th gear) which is supplied under Spare Part No: 091 311 295 A

094-4WD Manual Transmission Case, Gears, Shafts

Quick Data

Index

– Adjusting rings
  installing 35.96
  marking/removing 35.95
– Assembling/Disassembling 35.99
  35.100
– Assembly 35.94, 35.98, 35.105
– Axle flange
  installing 35.96
  removing 35.95
– Bearing, removing 35.122
  installing/checking 35.123
  inner race, removing 35.122
– Clutch housing 35.111
– Differential lock servo 35.96
– Drive flange seal
  installing 35.115
– Drive pinion 35.121
– Driveshaft flange
  removing 35.104
– Flange nut
  loosening/tightening 35.104
– Flange seal
  installing 35.104
– Gear carrier 35.107, 35.116
  disassembling/assembling
  35.108–35.110
– Gears
  1st, 2nd and 3rd,
  removing 35.122
– Housing 35.113
– Intermediate housing
  removing 35.106
– Low gear idler
  removing 35.106
– Low gear shim
  measuring 35.101, 35.102
– Lower gear bearing
  removing/installing 35.126
– Main shaft 35.117
  bearing, removing/
  installing 35.119
– Main shaft seal
  removing/installing 35.112
– Needle bearing
  removing/installing 35.115,
  35.119, 35.120
– Needle bearing
  inner race, loosening/
  tightening 35.123
  outer race, installing 35.126
  outer race, removing 35.125
– Output housing 35.103
– Output shaft bearing
  removing/installing 35.114
– Rear driveshaft
  measuring 35.97
– Reverse gear idler
  removing/installing 35.106
– Shift rod bushing
  removing/installing 35.115
– Shift shaft seal
  removing/installing 35.114
– Starter bushing
  removing/installing 35.112
– Synchronizer rings
  identification 35.127
– 1st/2nd gear synchronizer
  checking/installing 35.124, 35.125
– 3rd gear installing 35.125
– 3rd/4th gear synchronizer 35.118
  installing 35.119

4-Speed 091
— See page 35.1

4-Speed 091/1
— See page 35.31

5-Speed 094
— See page 35.61

Note

Before disassembling, mount transmission in assembly stand (Fig. 1) and drain transmission fluid.

CAUTION

Protect driveshaft oil seal from damage by the driveshaft splines before removing and installing the clutch housing. Pull a wiring harness conduit or similar covering over the driveshaft.

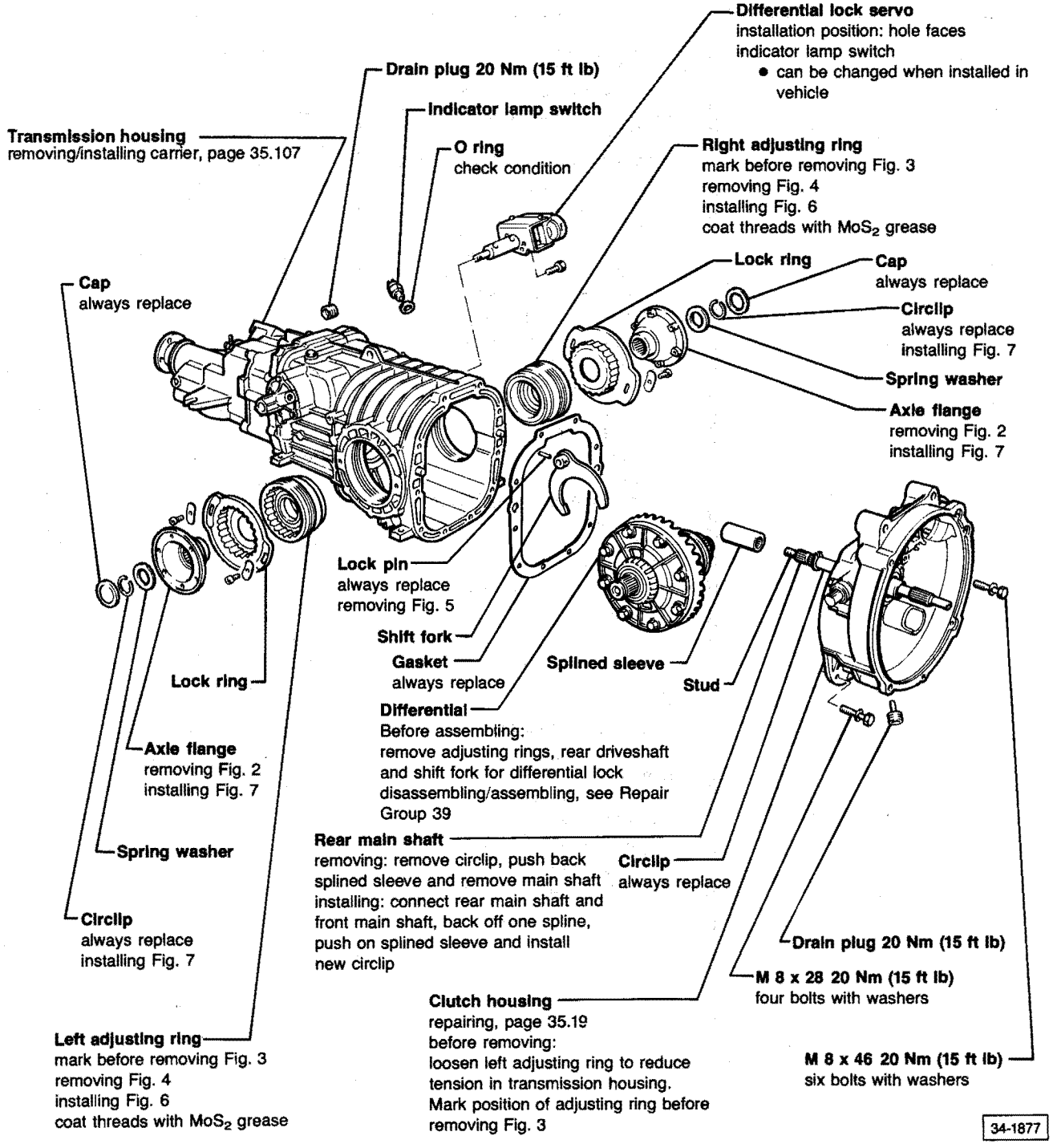

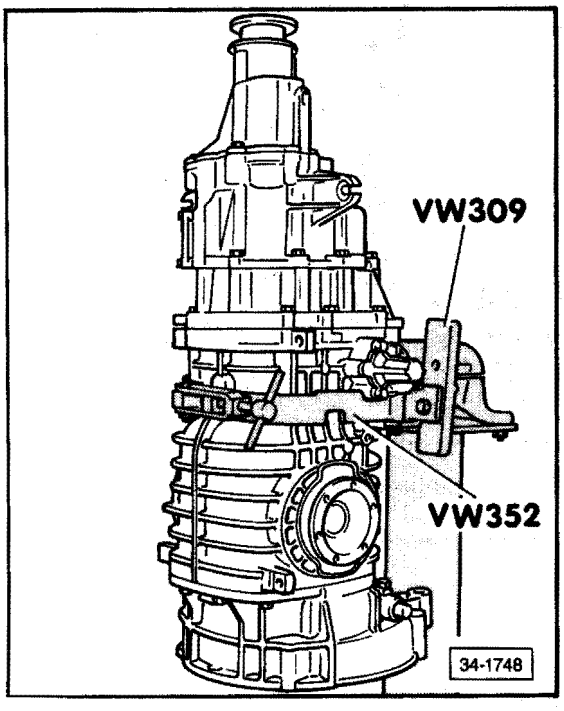

Fig. 1 Transmission, mounting in repair stand

— remove shift rod lever and backup lights switch before mounting transmission in repair stand

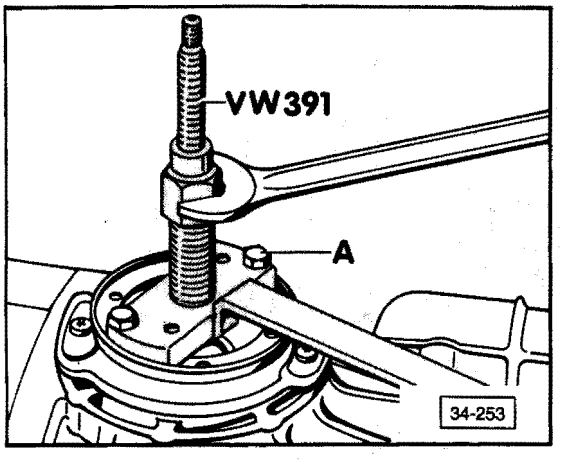

Fig. 2 Axle flange, removing

A = screw 2 bolts (M 8 x 30) through slots in axle flange

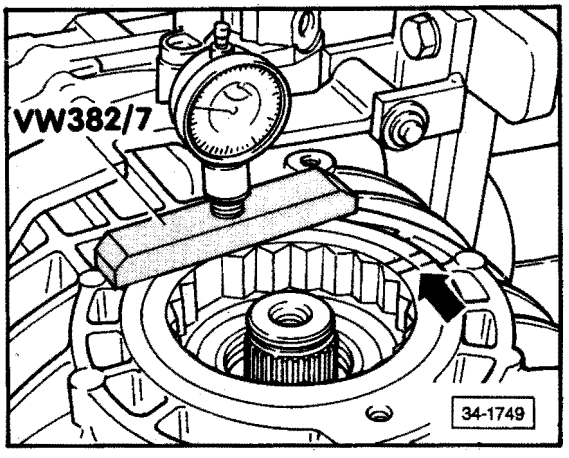

Fig. 3 Adjusting ring, marking position

When differential is not being replaced:

- mark position of adjusting rings in relation to transmission (**arrow**)
- mark left side (ring gear side with one scratch, mark right side with two scratches
- measure installed depth with **VW 382/7**

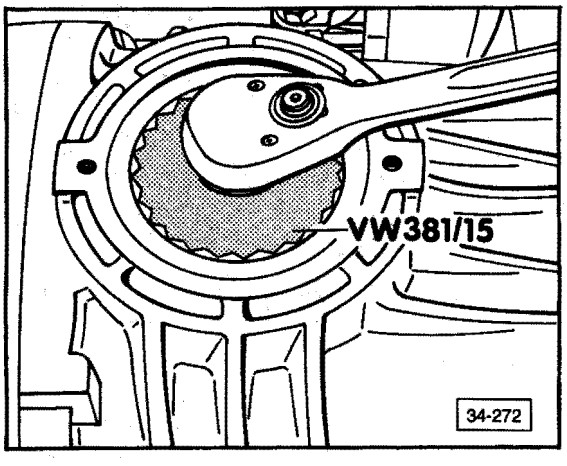

Fig. 4 Adjusting rings, removing

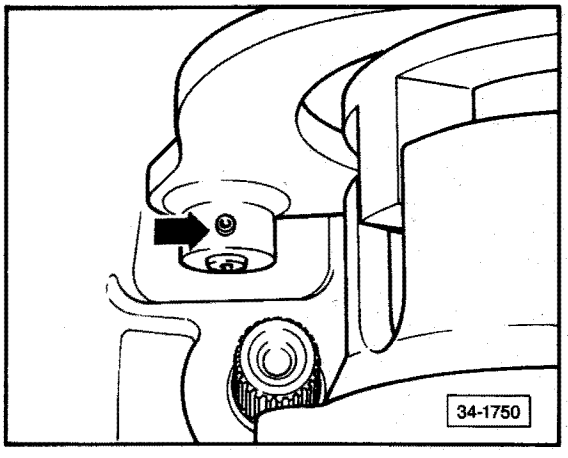

Fig. 5 Differential lock servo, removing

— drive out shift fork lock servo
— remove differential lock servo from shift fork

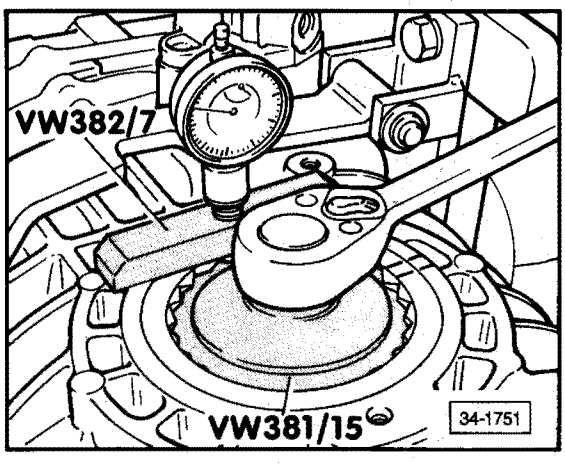

Fig. 6 Adjusting rings, installing

— install adjusting rings into transmission housing using previously marked position
— check that depth equals previous measurement

CAUTION

Tighten left bearing ring after the clutch housing is installed and torqued.

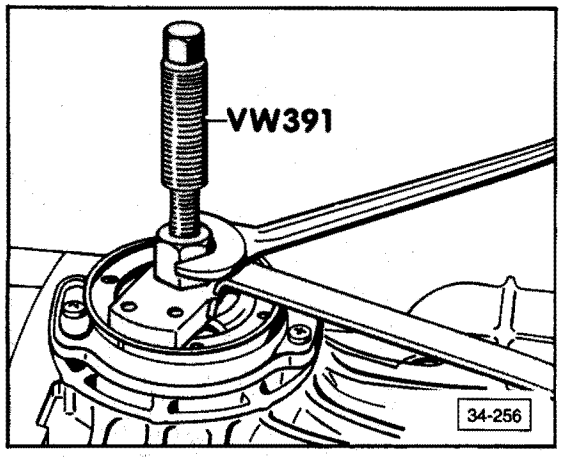

Fig. 7 Axle flange, installing

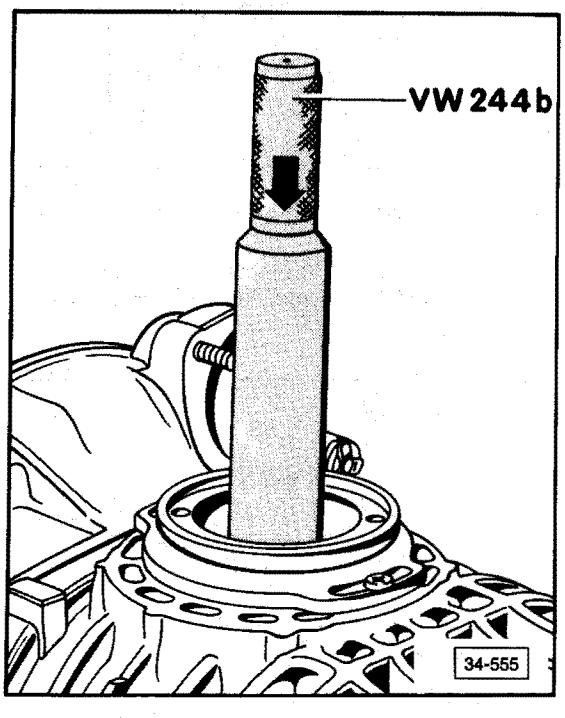

Fig. 8 Circlip, installing

— install spring washer and circlip
— press circlip into groove
  • make sure spring washer is fully seated

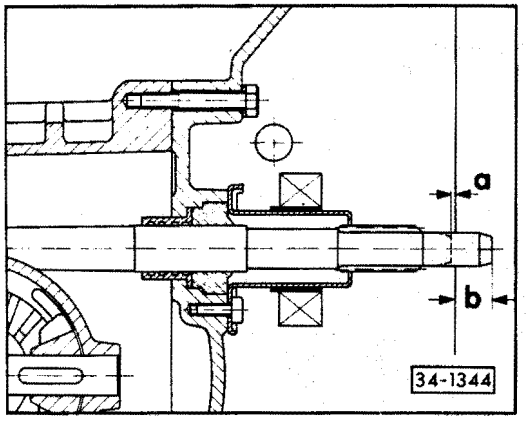

Fig. 9 Rear driveshaft, measuring

— dimension **b** = 27 mm (1.06 in.)
— total length = 298 mm (11.73 in.)

Note

If the bearings and/or transmission housing are being replaced and the r dimension is not specified on the ring gear, the position of the drive pinion to the housing must be determined before disassembling. When installing, this position must be the same. See Repair Group 39.

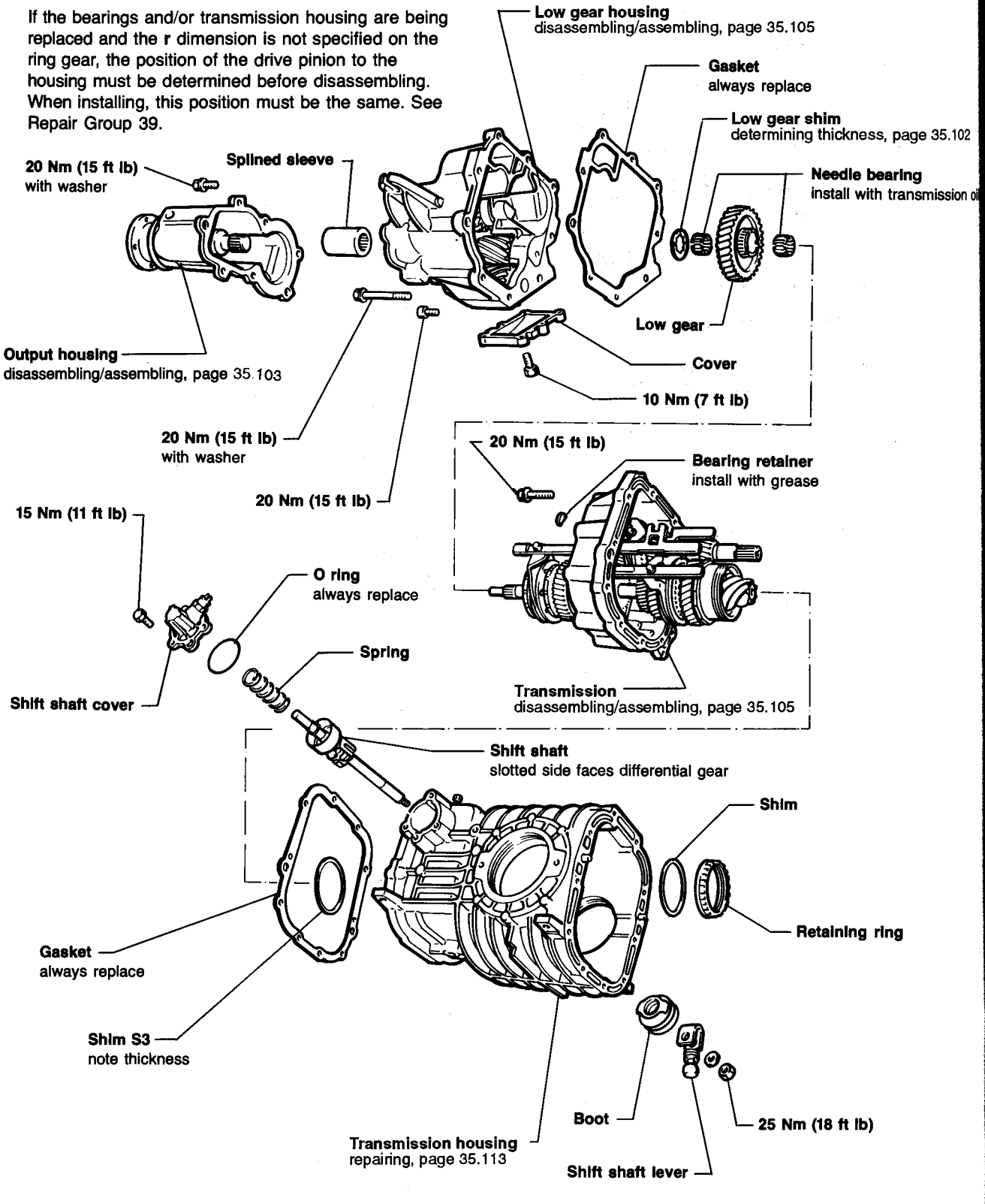

Transmission, disassembling/ assembling

Disassembling

— remove output housing bolts
— remove housing

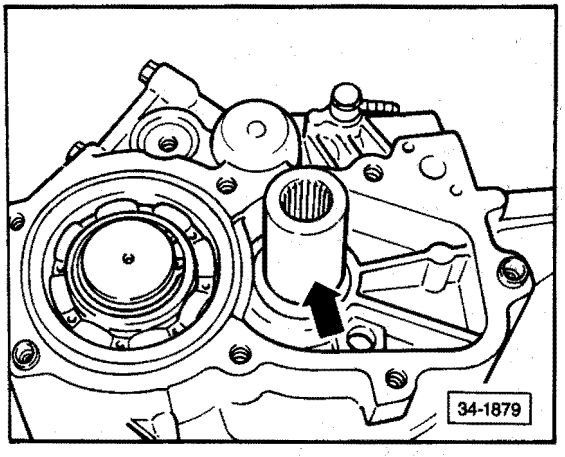

— remove splined sleeve (**arrow**)
— remove cover for reverse idler gear

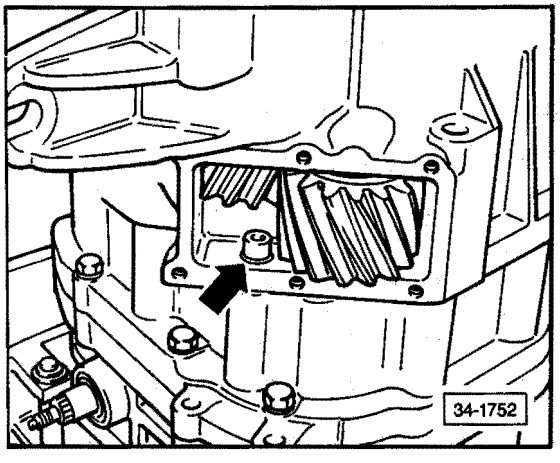

— remove bolt (**arrow**)
— remove low gear housing bolts

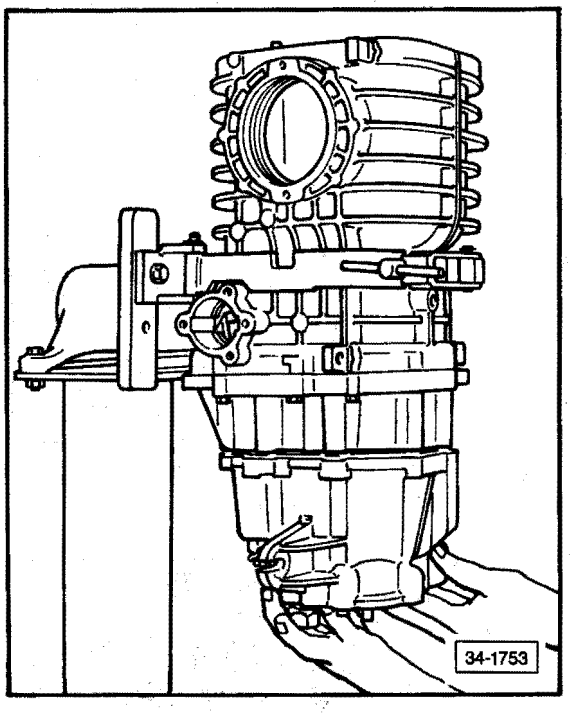

— rotate transmission 180° (1/2 turn)
— remove low gear housing along with low gear, needle bearing and shim
— unbolt shift shaft cover
— remove shift shaft

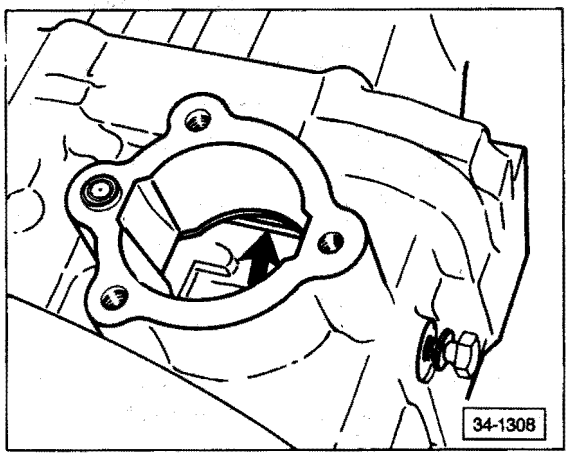

— loosen bolt until relay lever (**arrow**) pulls against housing
— tighten bolt by hand to lock lever in that position

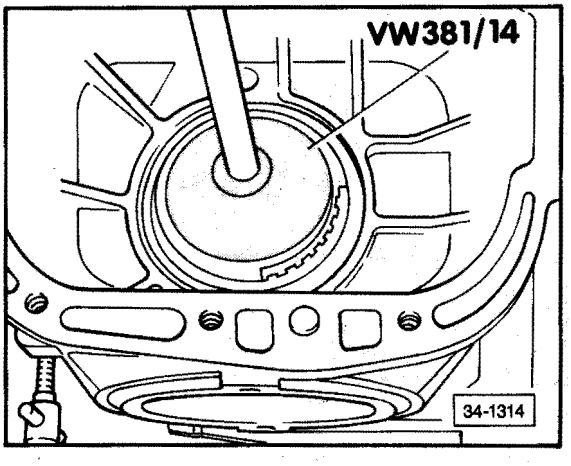

— remove retaining ring
— remove end shield from housing

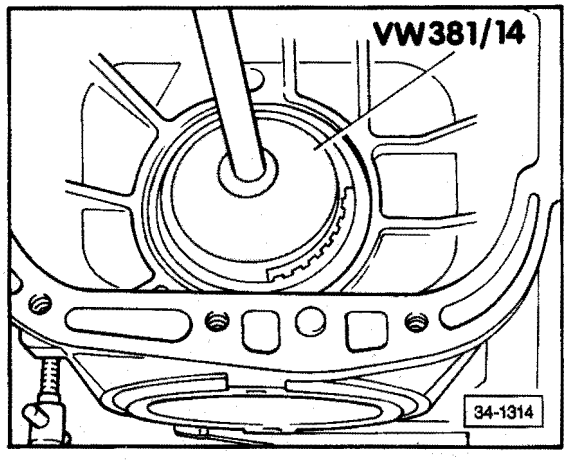

— tighten retaining ring to 225 Nm (162 ft lb), loosen and tighten again to 225 Nm (162 ft lb)

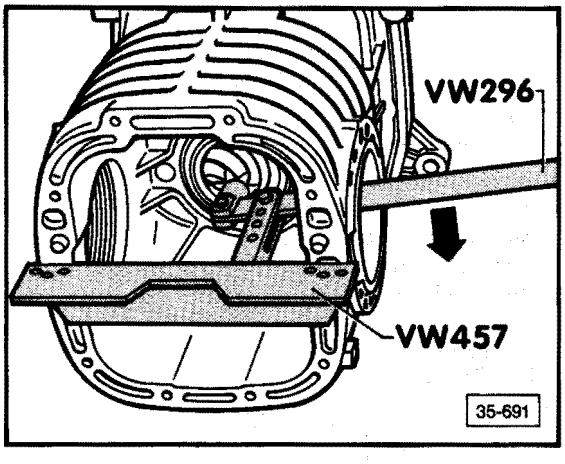

— attach **VW 457** with two M 8 x 20 bolts
— push out gear carrier
— remove shim **S3** and note thickness

Assembling

Before installing gear carrier:
— position shim **S3** and new gasket
— position shift rail
— position bearing to opening in housing
— heat bearing seat in transmission housing to 40-60° C (130-166° F)

— seat bearing using a plastic hammer on drive pinion
— check for binding
— install retaining ring and shim (75 mm wide)

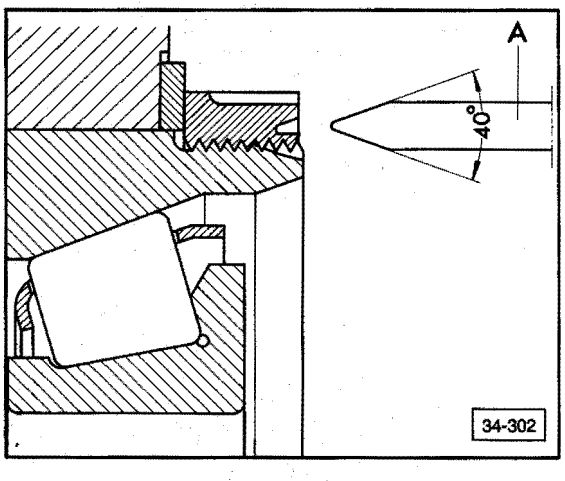

— secure retaining ring at two places by staking
— bolt end shield to transmission housing
— loosen relay lever bolt
— position lever and tighten bolt to 20 Nm (15 ft lb)

— install shift shaft with slotted side facing differential gear
— install new seal in cover
— position cover with spring and tighten bolts to 15 Nm (11 ft lb)

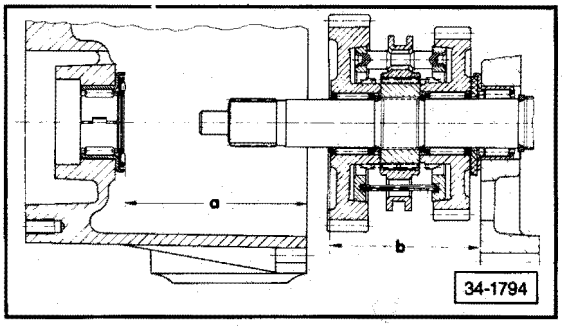

Adjustment range = **a** – **b**

Dimension **b** = **x** – **y**

Low gear shim, determining thickness

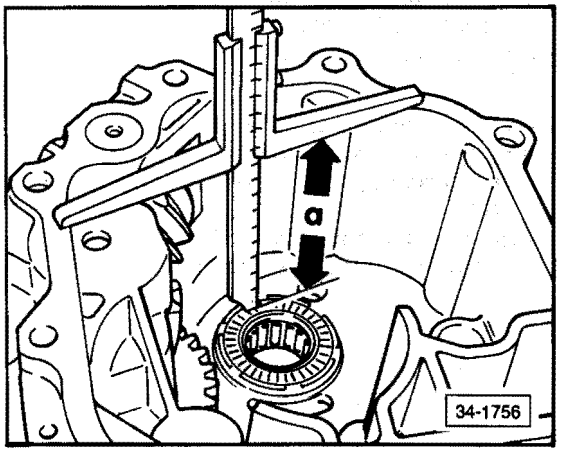

— measure dimension **a**

Example

a = 77.8 mm

— measure dimension **x**

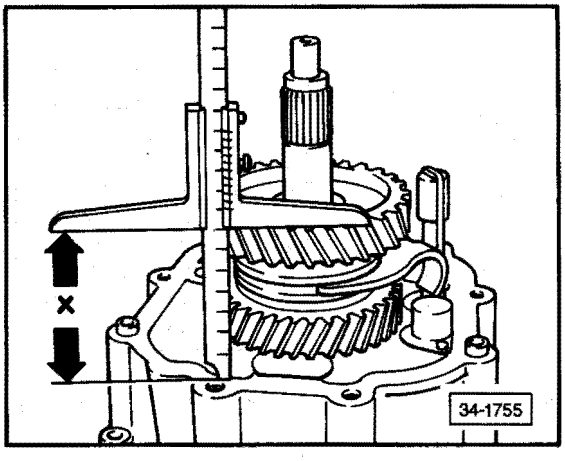

Example

x = 77.6 mm

— measure dimension **y**

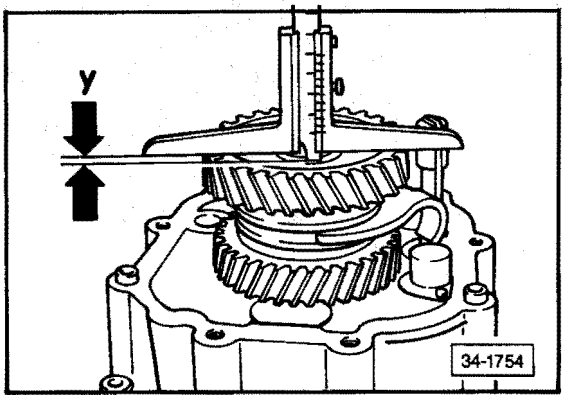

Example

y = 1.0 mm

Dimension **b** = **x** – **y**

Example

x =	77.6 mm
–**y** =	1.0 mm
	76.6 mm

Adjustment range = **a** – **b**

Example

a =	77.8 mm
–**b** =	76.6 mm
	1.2 mm

Available shims:

Adjustment range (mm)	Shim Thickness	Part Number
0.95-1.14	0.6	094 311 379
1.15-1.34	0.8	094 311 379 A
1.35-1.54	1.0	094 311 379 B
1.55-1.74	1.2	094 311 379 C
1.75-1.94	1.4	094 311 379 D
1.95-2.14	1.6	094 311 379 E
2.15-2.47	1.8	094 311 379 F

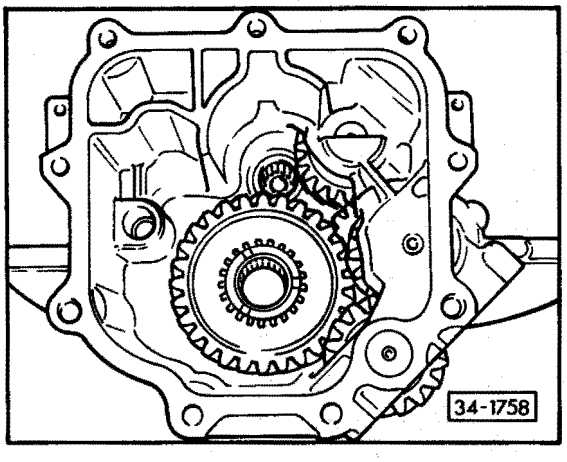

— install shim, low gear disc and needle bearing in low gear housing
— position new gasket

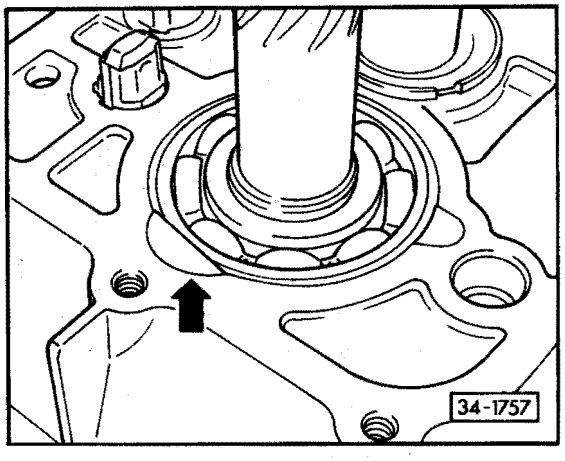

— install bearing retainer with grease (**arrow**)
— rotate transmission 180° (1/2 turn)
— push low gear housing from below, guiding gear and shim to drive pinion
— install mounting bolt and tighten to 20 Nm (15 ft lb)

— install reverse idler gear cover
— push splined sleeve onto drive pinion
— install output housing, tighten bolts to 20 Nm (15 ft lb)
— install back up light switch and shift shaft lever after removing transmission from repair stand

Note

To remove low gear housing, completely remove output housing.

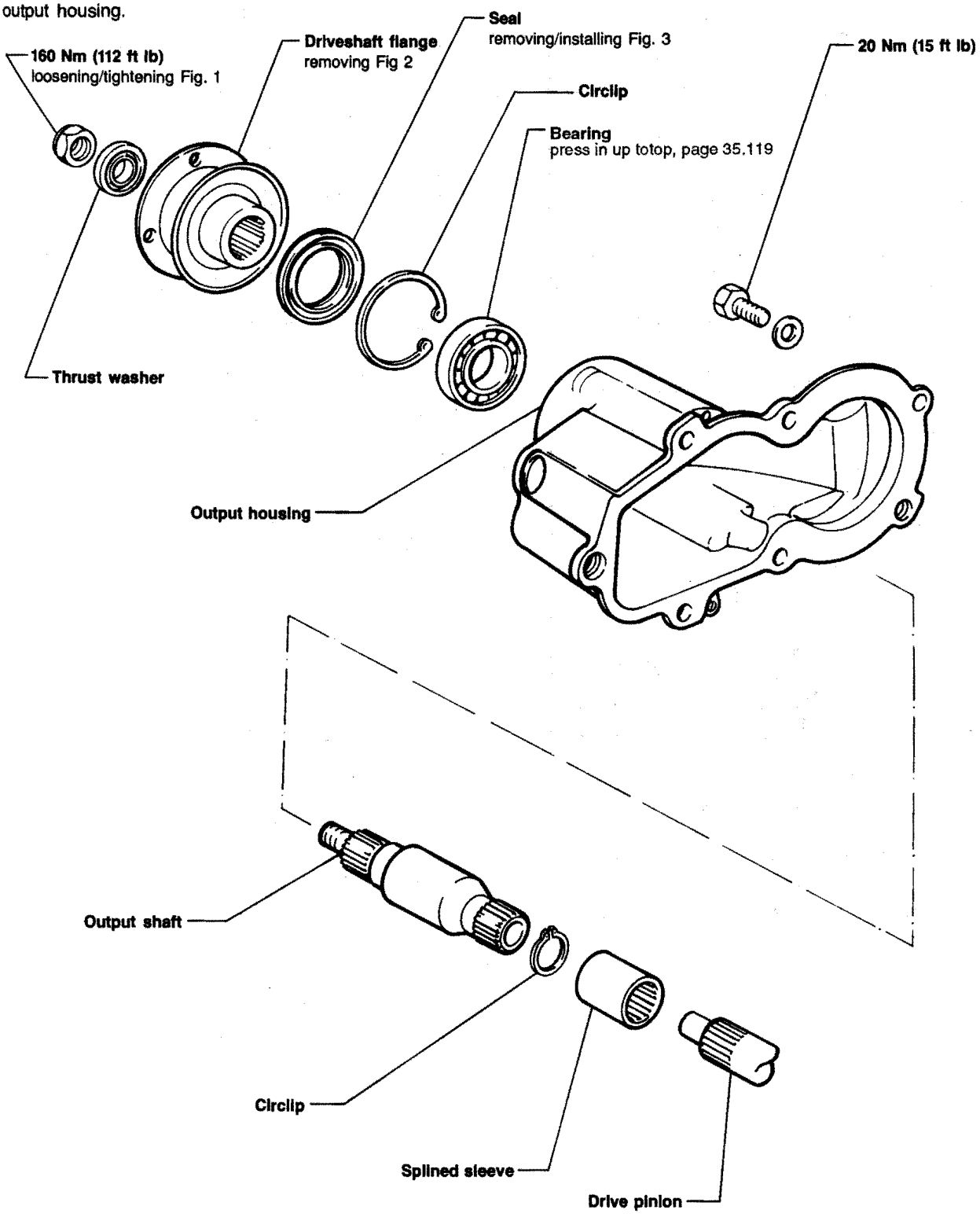

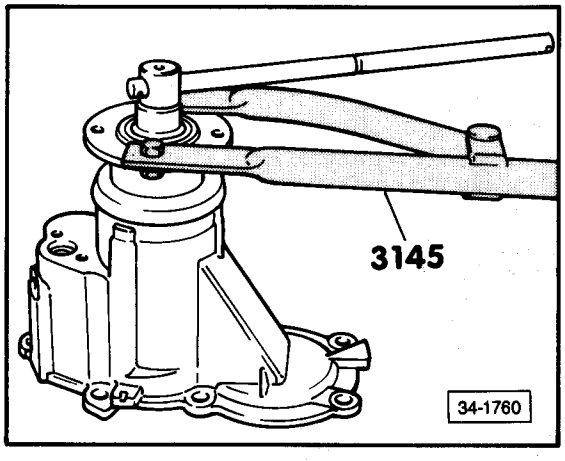

Fig. 1 Flange nut, loosening/tightening

— secure flange with tool
— loosen or tighten to 160 Nm (112 ft lb)

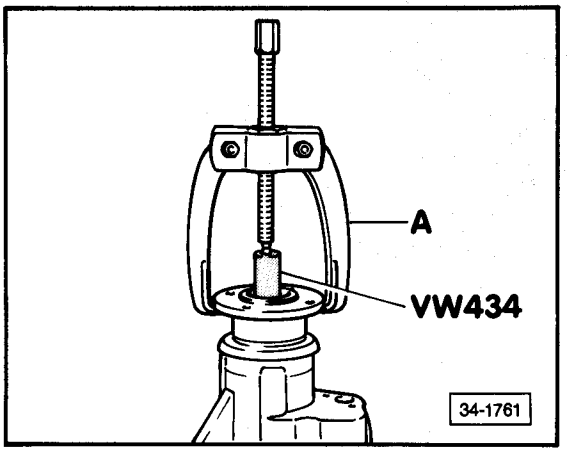

Fig. 2 Driveshaft flange, removing

— if necessary, pull off flange with a two armed extractor

A — two armed extractor of commercial size, e.g. Kukko 44-2

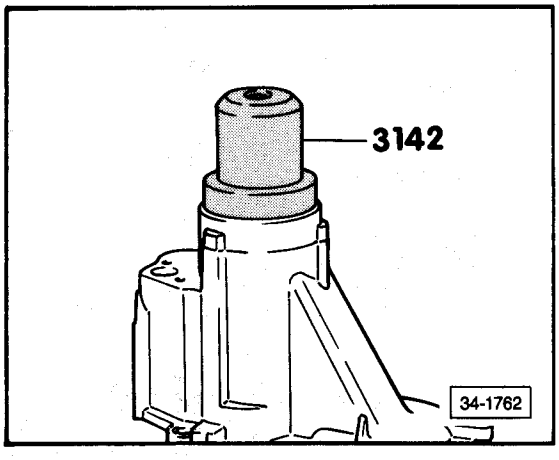

Fig. 3 Flange seal, installing

— press seal in to stop

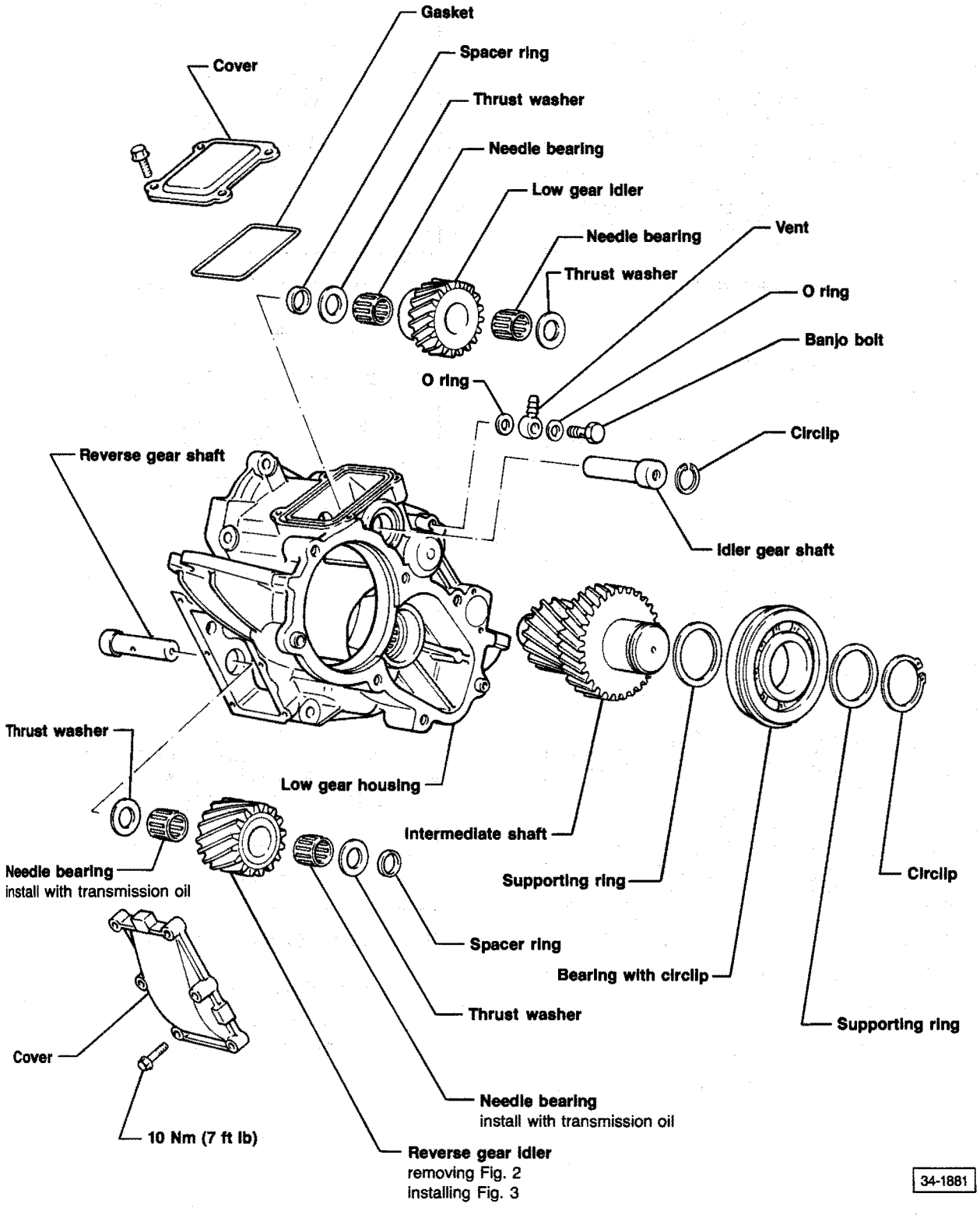
Gasket
Spacer ring
Cover
Thrust washer
Needle bearing
Low gear idler
Needle bearing
Vent
Thrust washer
O ring
Banjo bolt
O ring
Circlip
Reverse gear shaft
Idler gear shaft
Thrust washer
Low gear housing
Intermediate shaft
Needle bearing
install with transmission oil
Supporting ring
Circlip
Spacer ring
Bearing with circlip
Thrust washer
Supporting ring
Cover
Needle bearing
install with transmission oil
10 Nm (7 ft lb)
Reverse gear idler
removing Fig. 2
installing Fig. 3
34-1881

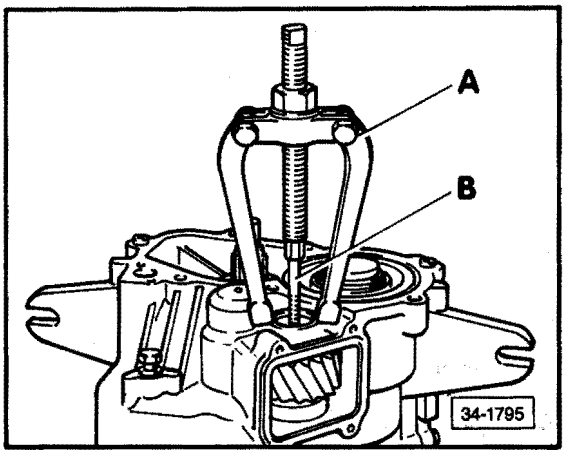

Fig. 1 Low gear idler, removing

— remove idler gear shaft

A — Puller, e.g. Kukko 22-1

B — Reducing thread bolt M5

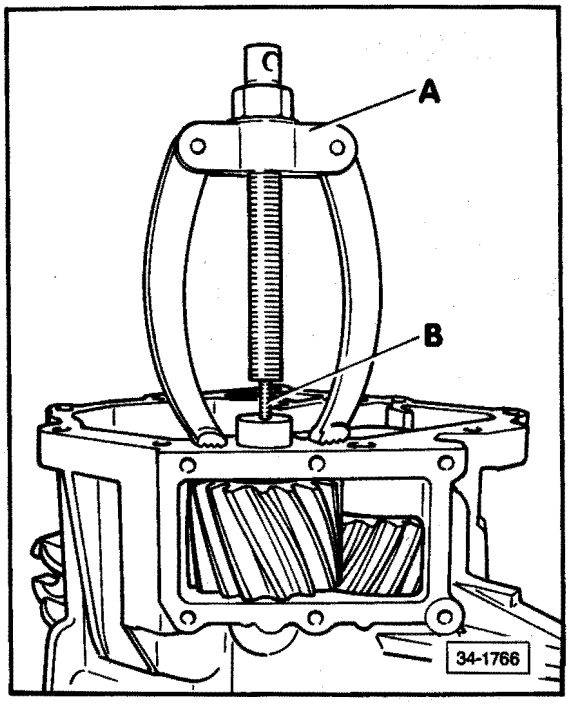

Fig. 2 Reverse gear idler, removing

A — Puller, e.g. Kukko 22-1

B — Reducing thread bolt M5

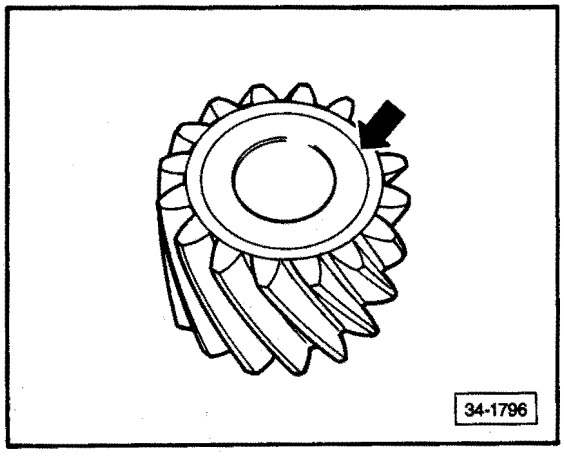

Fig. 3 Reverse gear idler, installing

— install with groove pointing up

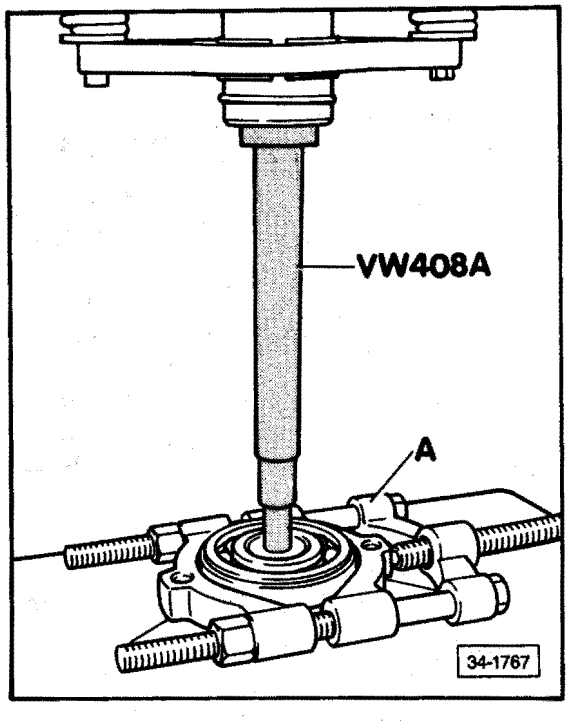

Fig. 4 Intermediate bearing, removing

— clamp separation device behind bearing

A — Separation device,
e.g. Kukko 15-15, Gr. 2

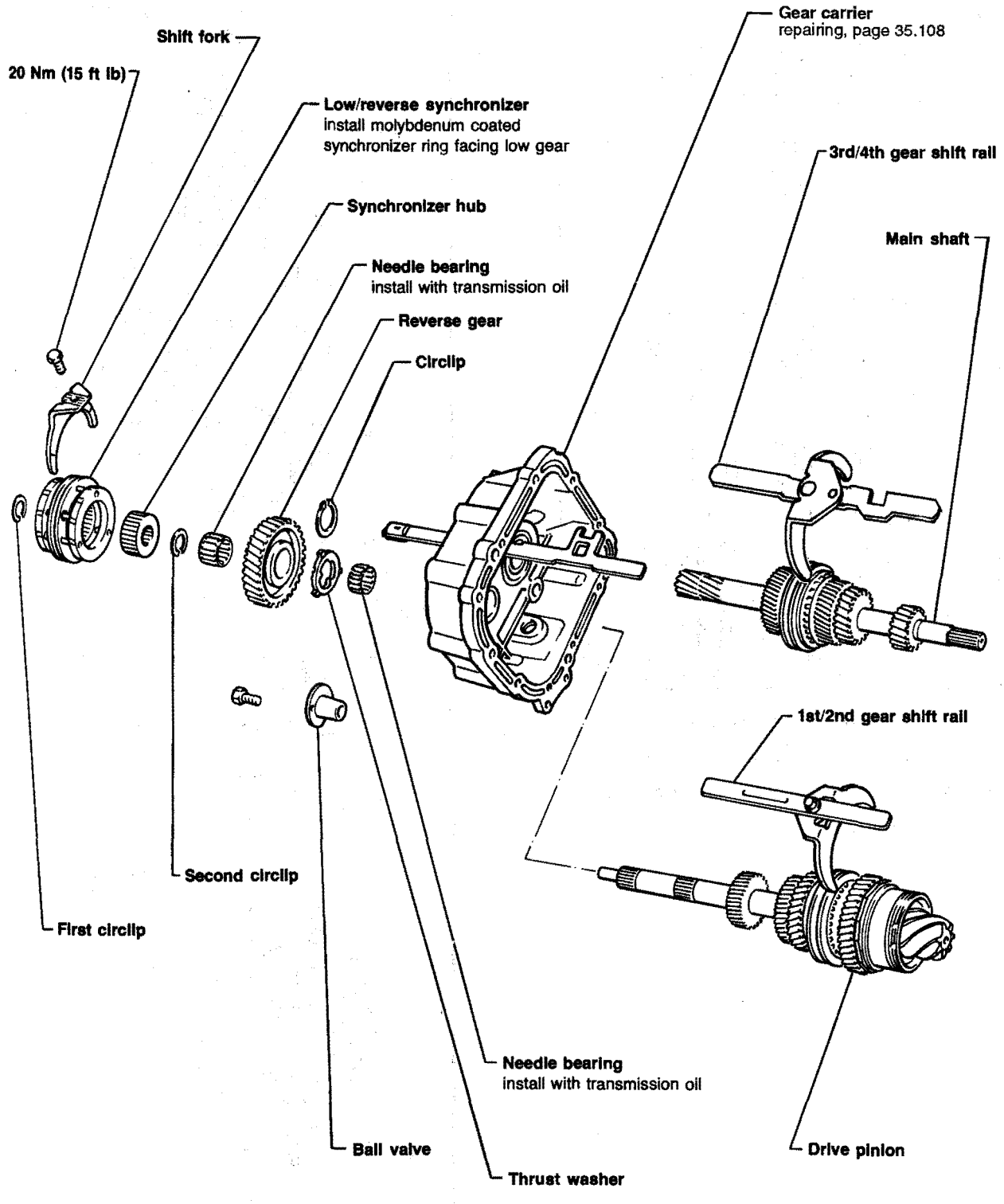
Shift fork
20 Nm (15 ft lb)
Low/reverse synchronizer
install molybdenum coated
synchronizer ring facing low gear
Synchronizer hub
Needle bearing
install with transmission oil
Reverse gear
Circlip
Gear carrier
repairing, page 35.108
3rd/4th gear shift rail
Main shaft
1st/2nd gear shift rail
Second circlip
First circlip
Needle bearing
install with transmission oil
Ball valve
Thrust washer
Drive pinion
34-1777

Gear carrier, disassembly/assembly

Disassembly

— remove low/reverse gear shift fork
— remove low/reverse gear synchronizer
— remove synchronizer hub first circlip

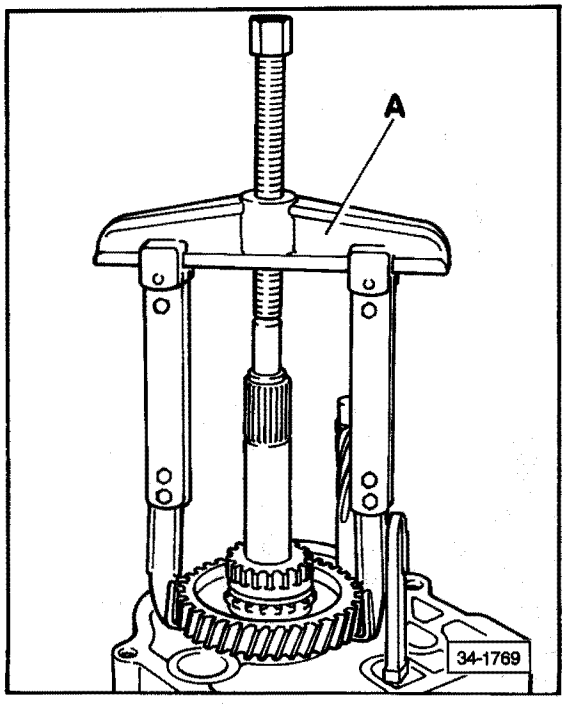

— remove synchronizer hub with control gear

A — two armed extractor, e.g. Kukko 20/10

— remove second circlip, thrust washer and needle bearing
— remove main shaft circlip

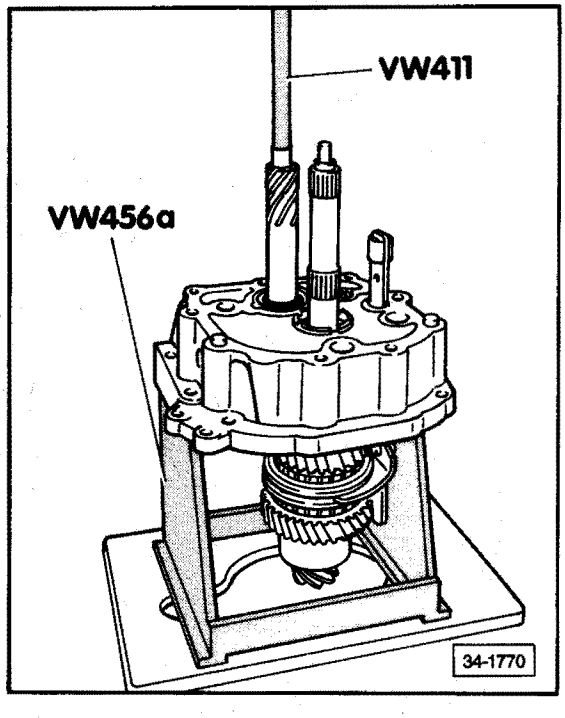

— press out main shaft with drive pinion and shift rails

Assembly

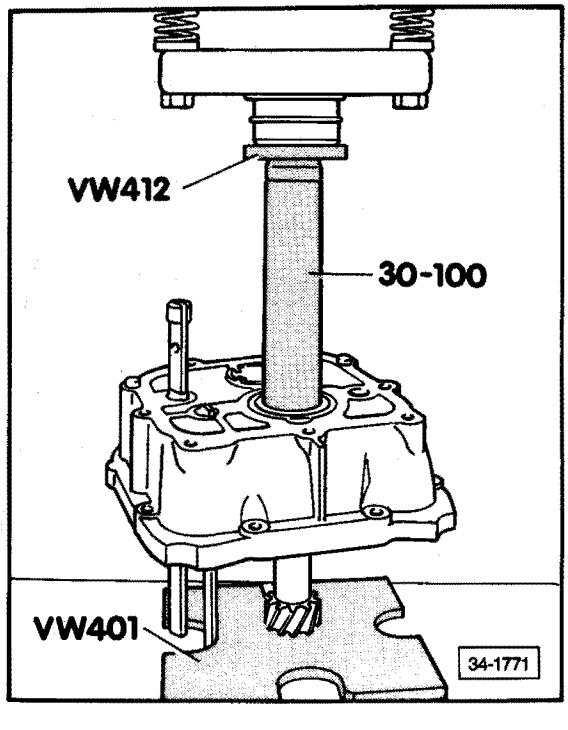

— press in main shaft with shift rail

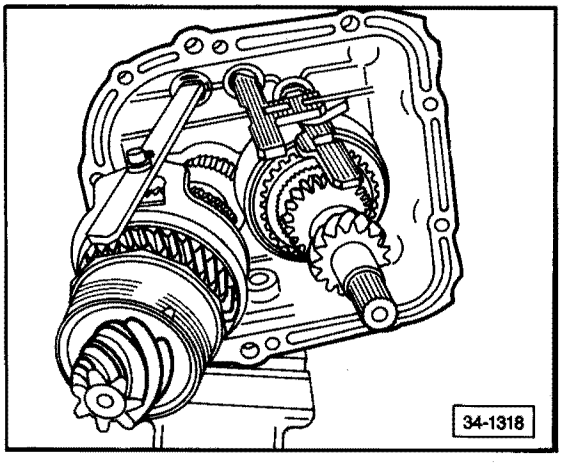

— install drive pinion with shift rail
— shift into 3rd gear
— shift into neutral
— install needle bearing for drive pinion
— install main shaft circlip

Before installing gear carrier:
— position shim **S3** and new gasket
— position shift rail
— position bearing facing opening in housing

— heat bearing seat in transmission housing to 40-60° C (130-166° F)
— seat bearing using a plastic hammer on drive pinion
— check for binding

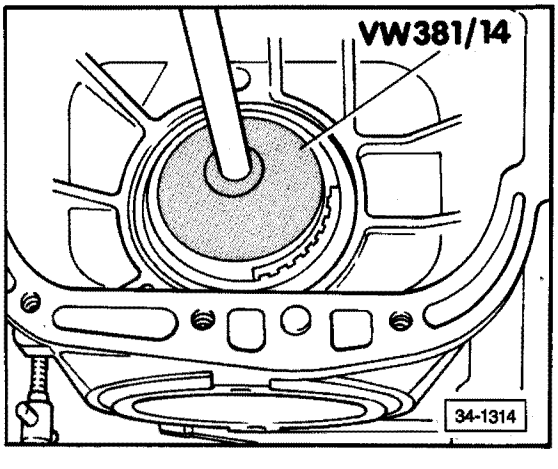

— tighten retaining ring (75 mm wide) to 225 Nm (162 ft lb), loosen and tighten again to 225 Nm (162 ft lb)

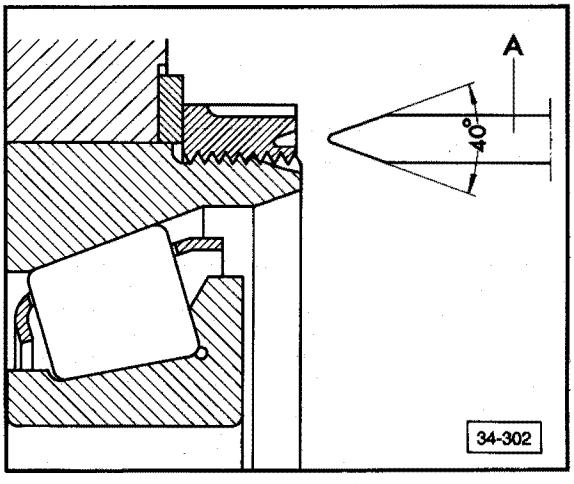

— secure retaining ring at two places by staking
— install end shield to transmission housing
— determine thickness of reverse gear thrust washer (75 mm wide)

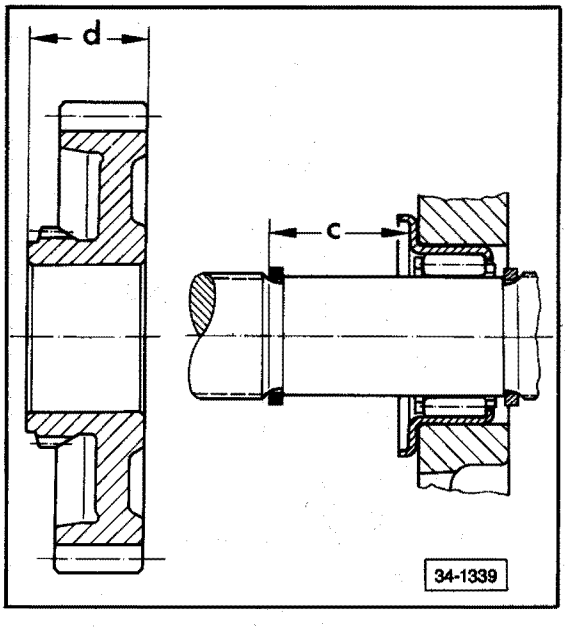

— position circlip and measure dimension **c**

Example

c = 29.1 mm

— measure dimension **d**

Example

d = 24.7 mm

Example

Dimension **c**	= 29.1 mm
– Dimension **d**	= 24.7 mm
= Adjustment range	= 4.4 mm

Shims available:

Adjustment range (mm)	Part Number	Color
3.97-4.19	091 311 379	white
4.20-4.39	091 311 379 A	black
4.40-4.59	091 311 379 B	green
4.60-4.90	091 311 379 C	red

— position thrust washer, reverse gear, needle bearing and second circlip

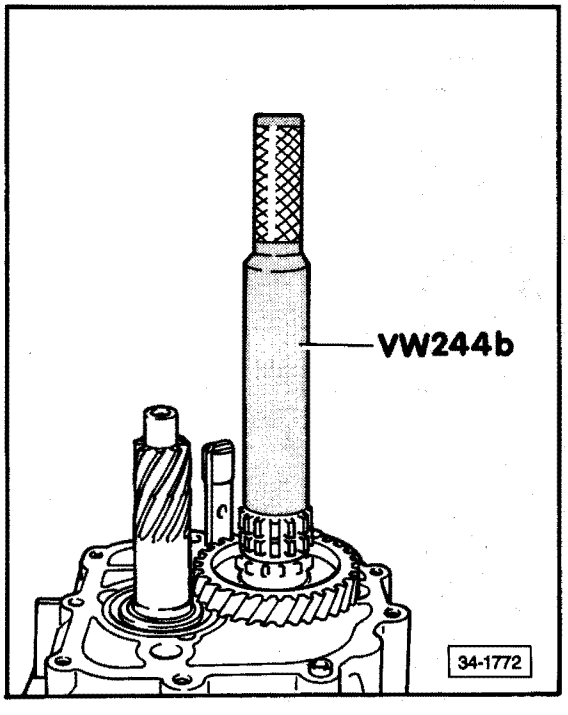

— install synchronizer hub
— position first circlip
— position low/reverse synchronizer with shift fork
— place molybdenum coated circlip on low gear
— fasten shift fork to shift rail
- coat bolt with **D 6** and tighten to 20 Nm (15 ft lb)

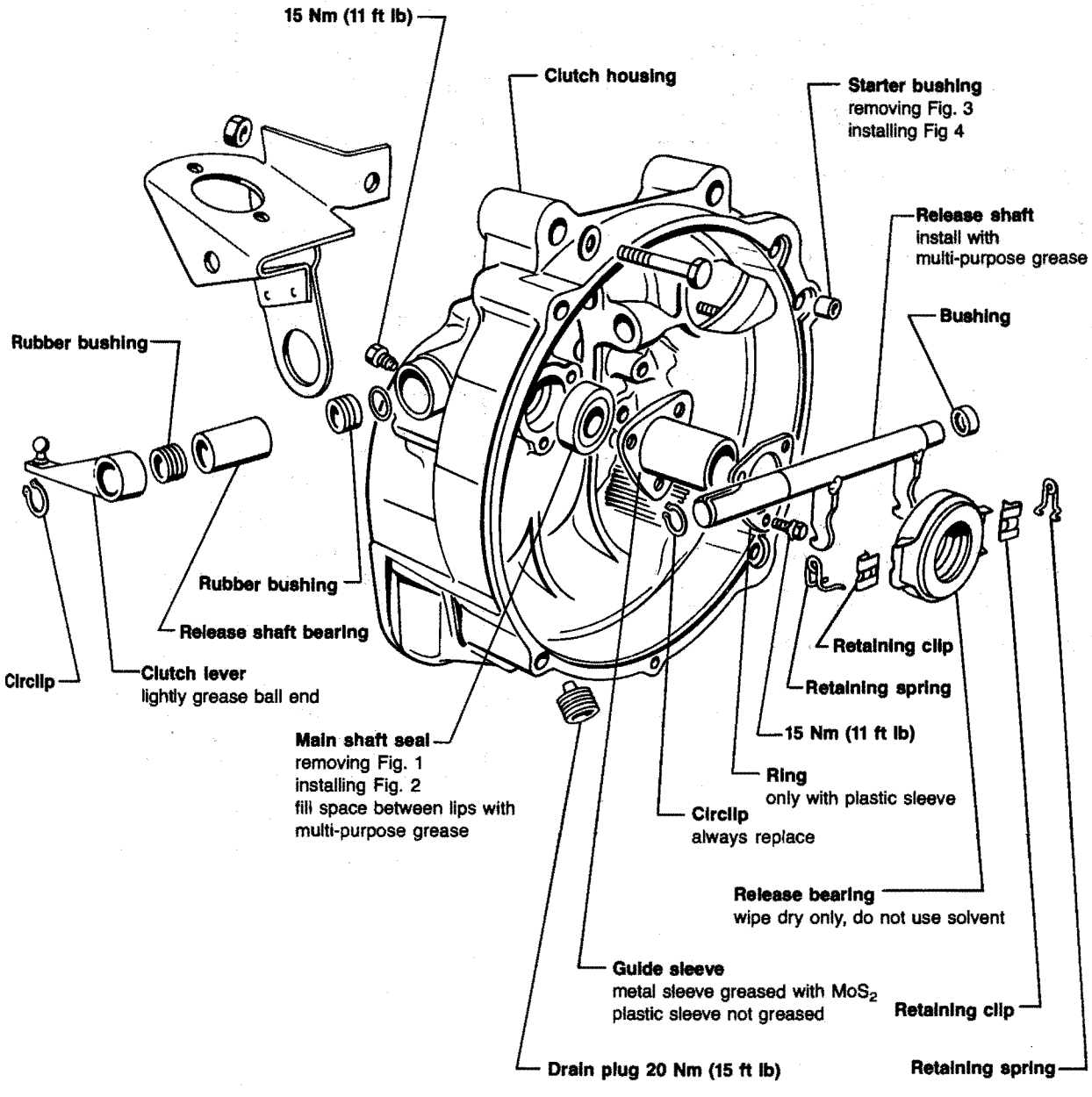
15 Nm (11 ft lb)
Clutch housing
Starter bushing
removing Fig. 3
installing Fig 4
Release shaft
install with
multi-purpose grease
Bushing
Rubber bushing
Rubber bushing
Release shaft bearing
Circlip
Clutch lever
lightly grease ball end
Main shaft seal
removing Fig. 1
installing Fig. 2
fill space between lips with
multi-purpose grease
Retaining clip
Retaining spring
15 Nm (11 ft lb)
Ring
only with plastic sleeve
Circlip
always replace
Release bearing
wipe dry only, do not use solvent
Guide sleeve
metal sleeve greased with MoS2
plastic sleeve not greased
Retaining clip
Drain plug 20 Nm (15 ft lb)
Retaining spring

35-1013

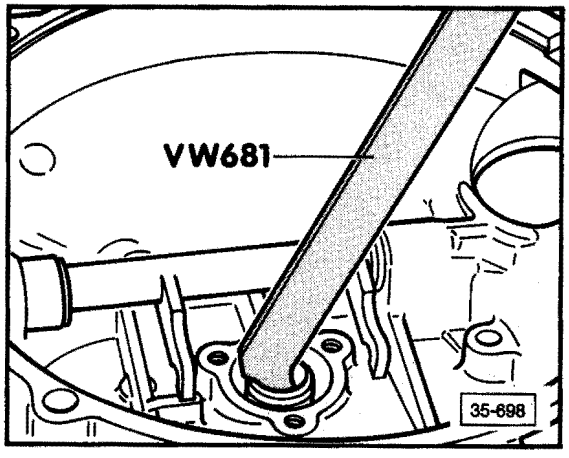

Fig. 1 Main shaft seal, removing

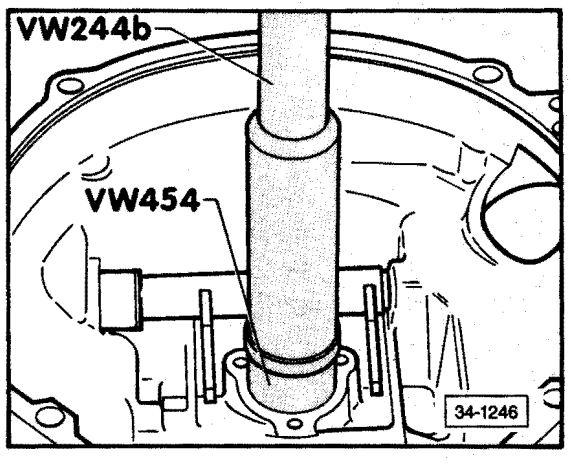

Fig. 2 Main shaft seal, installing

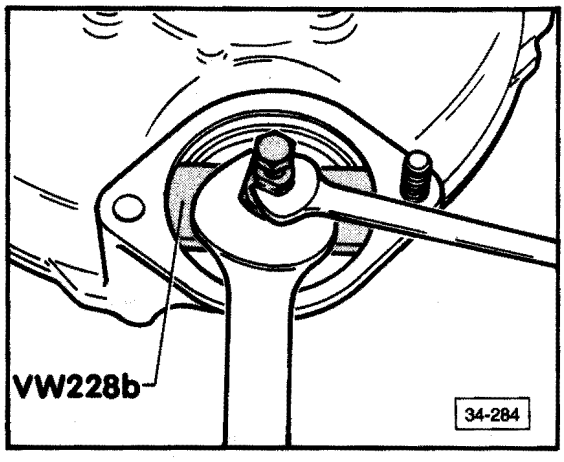

Fig. 3 Starter bushing, removing

(installed transmission)

Note

For disassembled transmission, remove with **VW 222a**.

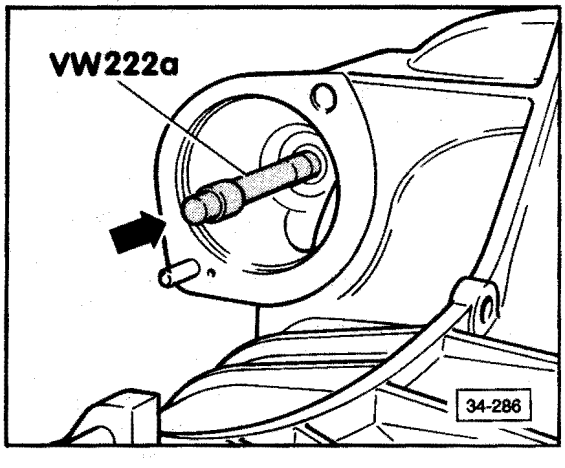

Fig. 4 Starter bushing, installing

— drive in flush

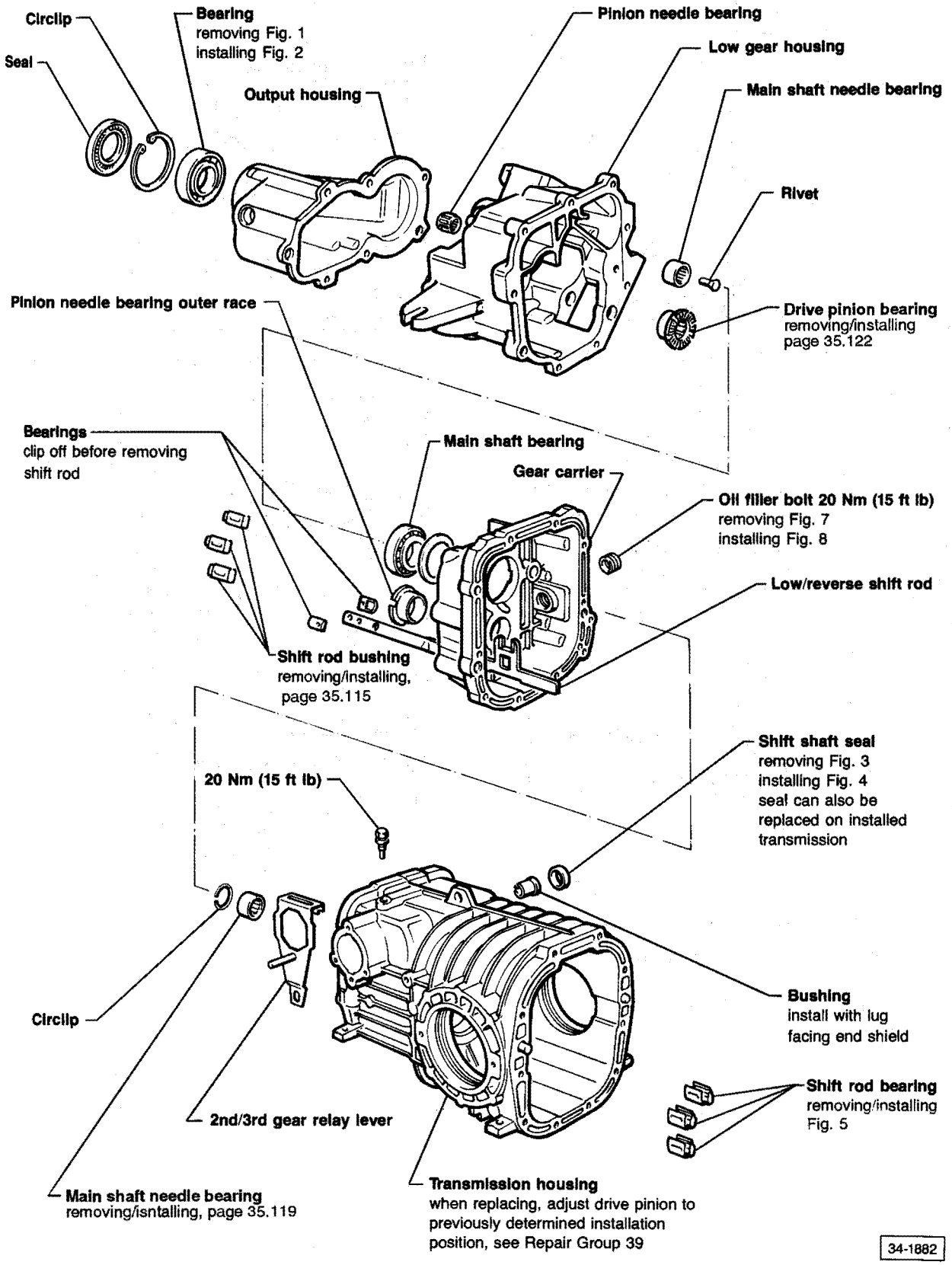
Circlip
Seal
Bearing
removing Fig. 1
installing Fig. 2
Output housing
Pinion needle bearing
Low gear housing
Main shaft needle bearing
Rivet
Pinion needle bearing outer race
Drive pinion bearing
removing/installing
page 35.122
Bearings
clip off before removing
shift rod
Main shaft bearing
Gear carrier
Oil filler bolt 20 Nm (15 ft lb)
removing Fig. 7
installing Fig. 8
Low/reverse shift rod
Shift rod bushing
removing/installing,
page 35.115
Shift shaft seal
removing Fig. 3
installing Fig. 4
seal can also be
replaced on installed
transmission
20 Nm (15 ft lb)
Circlip
Bushing
install with lug
facing end shield
Shift rod bearing
removing/installing
Fig. 5
2nd/3rd gear relay lever
Main shaft needle bearing
removing/isntalling, page 35.119
Transmission housing
when replacing, adjust drive pinion to
previously determined installation
position, see Repair Group 39
34-1882

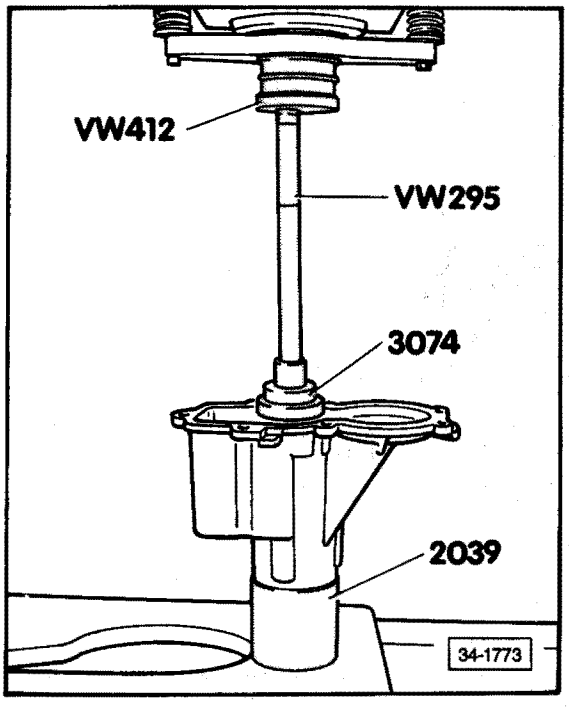

Fig. 1 Output shaft bearing, removing

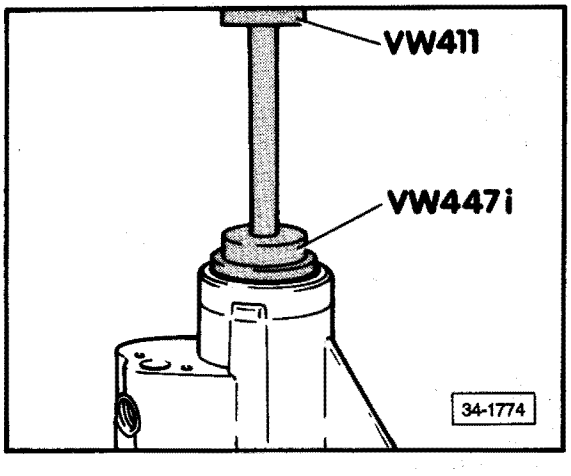

Fig. 2 Output shaft bearing, installing

— push bearing in to stop

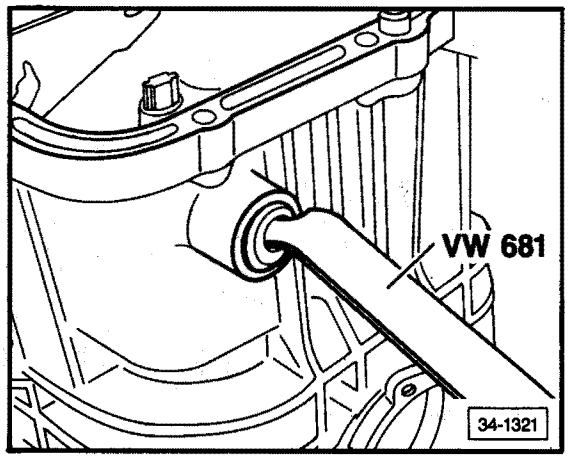

Fig. 3 Shift shaft seal, removing

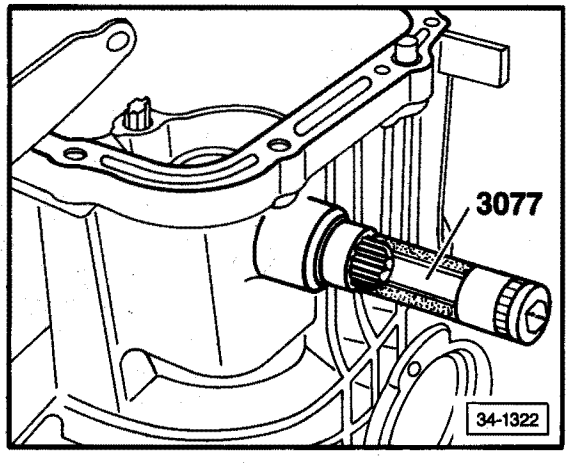

Fig. 4 Shift shaft seal, installing

— remove wire circlip
— drive in seal with **3077**
— replace wire circlip

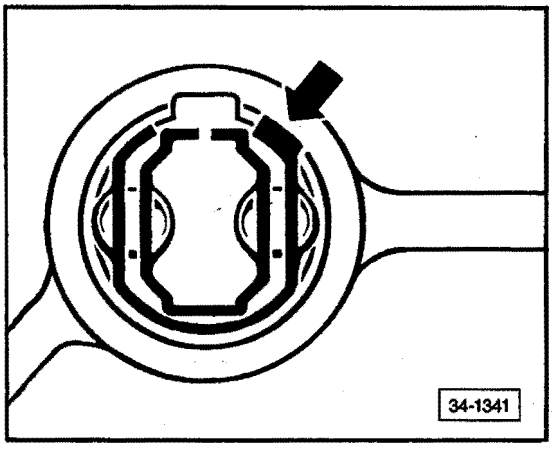

Fig. 5 **Shift rod bushing, removing/installing**

— to remove, rotate until lug (**arrow**) is positioned over recess in housing
— push out shift rod bushing

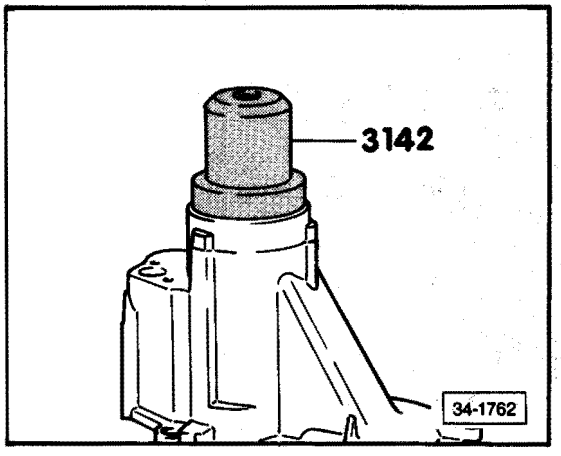

Fig. 6 **Drive flange seal, installing**

— push in seal up to stop

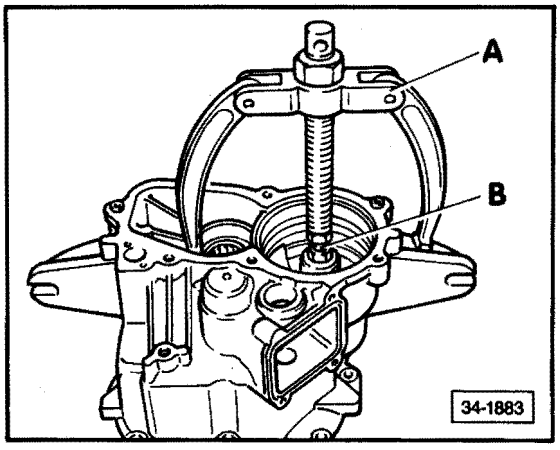

Fig. 7 **Needle bearing, removing**

A — Puller e.g. Kukko 22-2

B — Inner extractor 31 - 37 mm e.g. Kukko 21/5

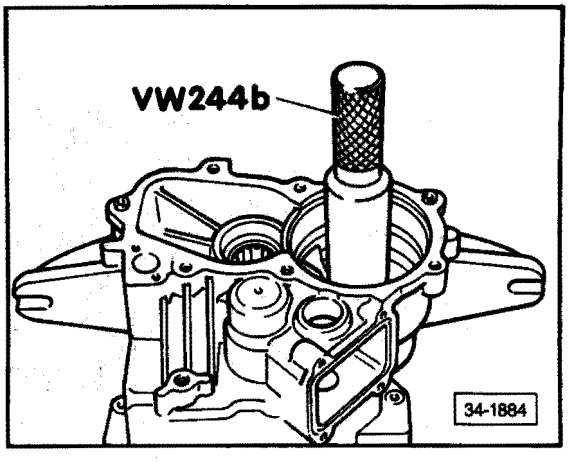

Fig. 8 **Needle bearing, installing**

— push in needle bearing to stop

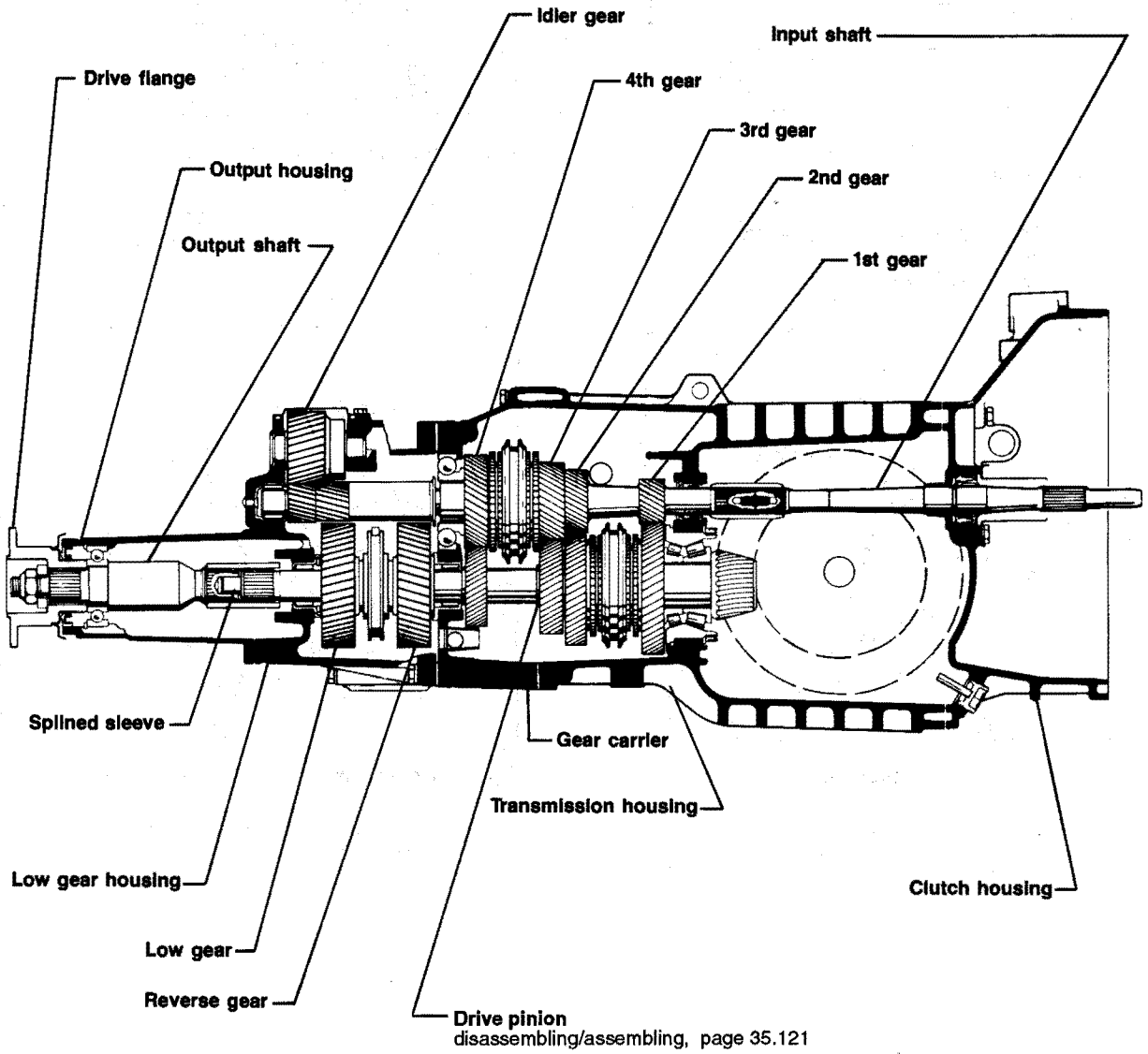

disassembling/assembling, page 35.121

34-1885

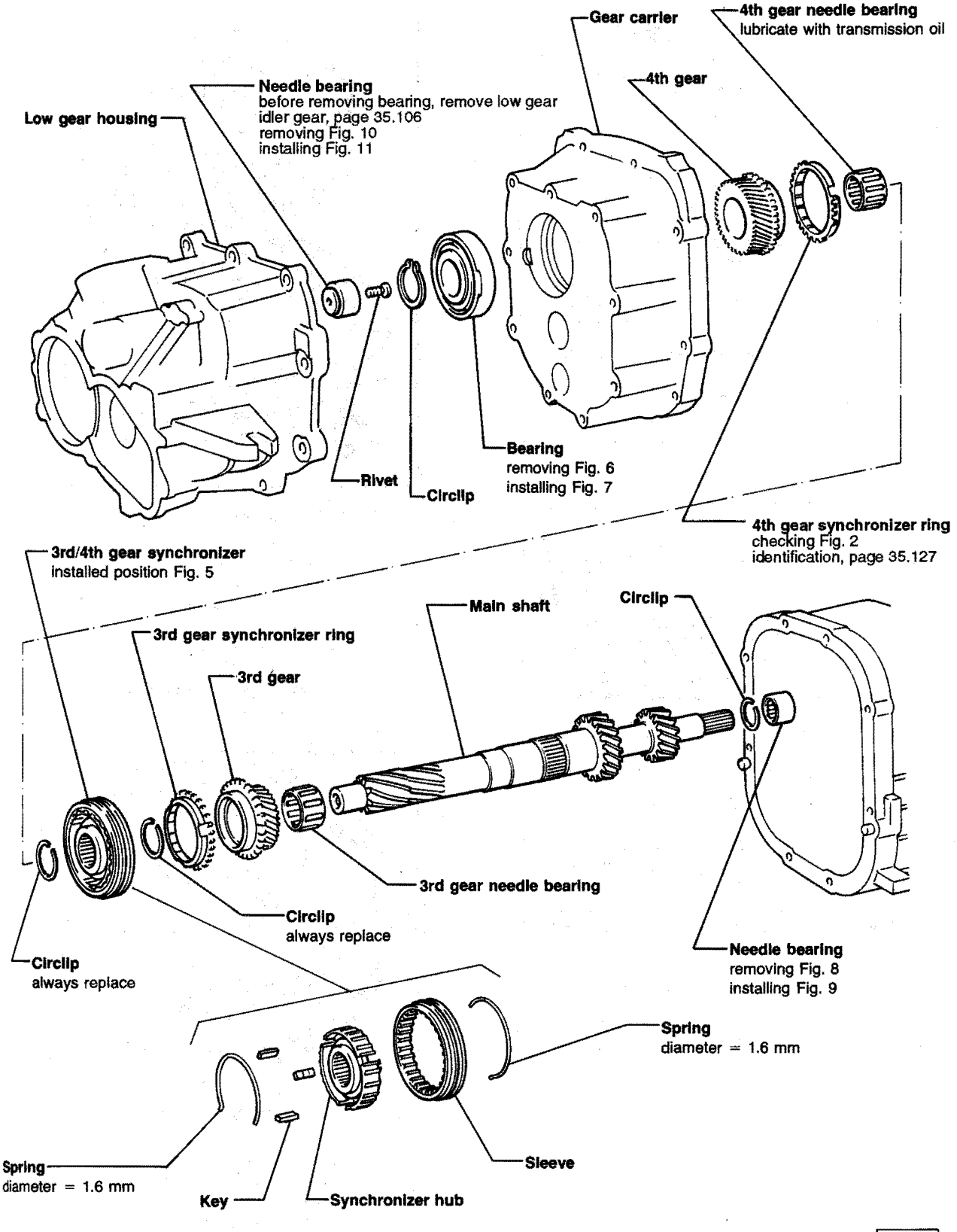

34-1885

35-1012

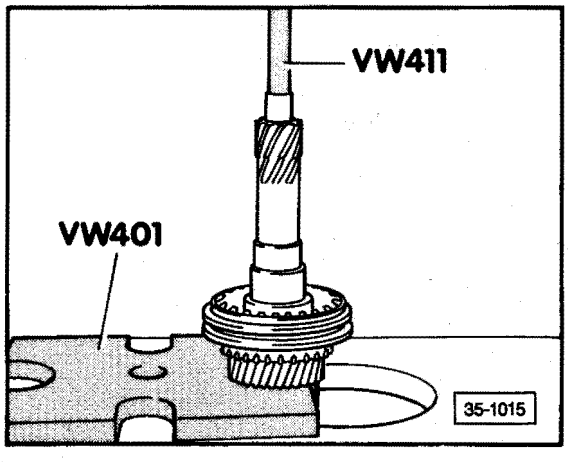

Fig. 1 Synchronizer 3rd/4th gears, removing

— press off with 3rd gear

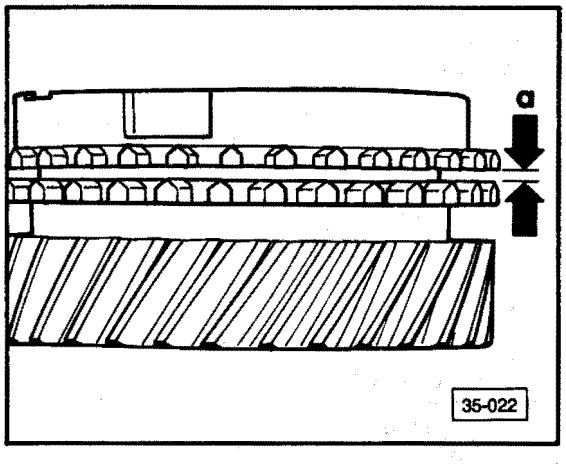

Fig. 2 Synchronizer rings, checking

— push synchronizer rings on to gear cones and measure gap **a** with a feeler gauge

Gap a	New Part mm (in.)	Wear limit
3rd gear	1.25-1.95 mm (0.049-0.077)	0.5 mm (0.020)
4th gear	1.00-1.70 mm (0.039-0.067)	0.5 mm (0.020)

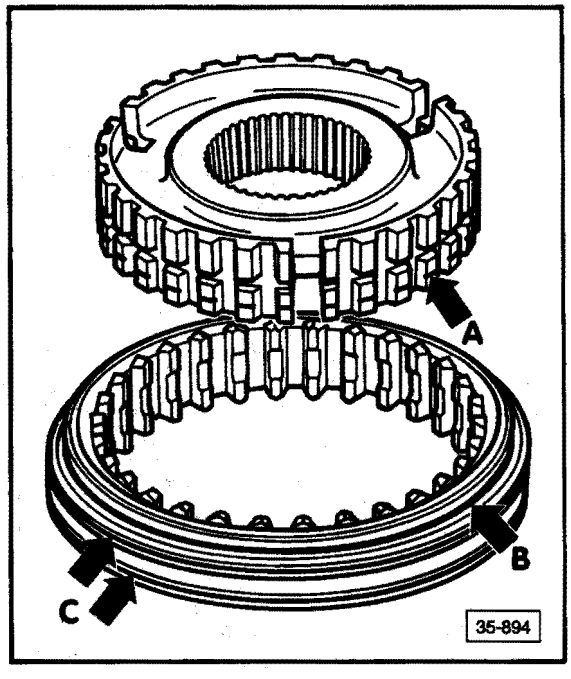

Fig. 3 3rd/4th gear synchronizer, assembling

- sleeve and hub identification grooves (**arrows A & B**) are on opposite sides
- clutch sleeve groove (**arrow B**) faces 4th gear
- the grooves (**arrows C**) are for identification:
  1st/2nd gear = one groove
  3rd/4th gear = two grooves

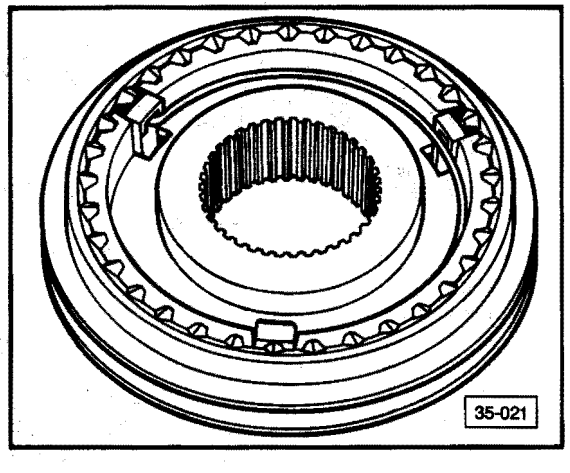

Fig. 4 Synchronizer 3rd/4th gear, assembling

— push sleeve over hub
— insert keys and install spring ends 120° apart
- angled ends of spring must fit into hollow key

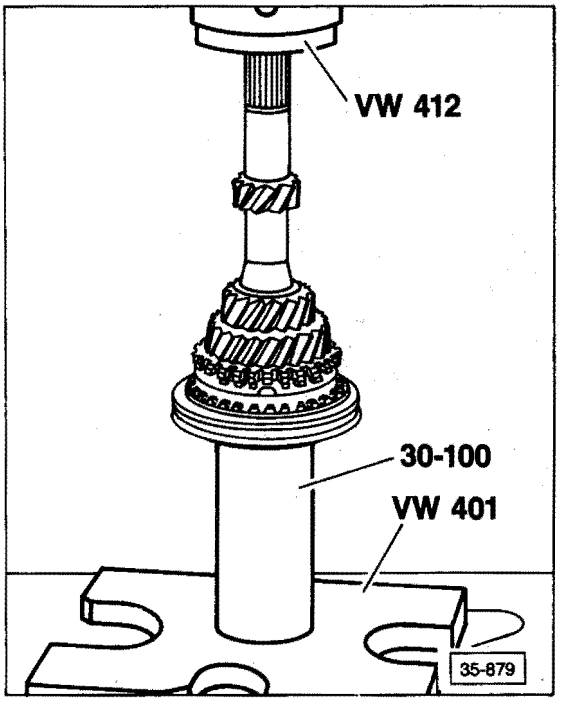

Fig. 5 Synchronizer 3rd/4th gear, installing

— rotate synchronizing ring until grooves are in line with keys
— clutch sleeve identification groove (Fig. 3, **arrow B**) faces 4th gear

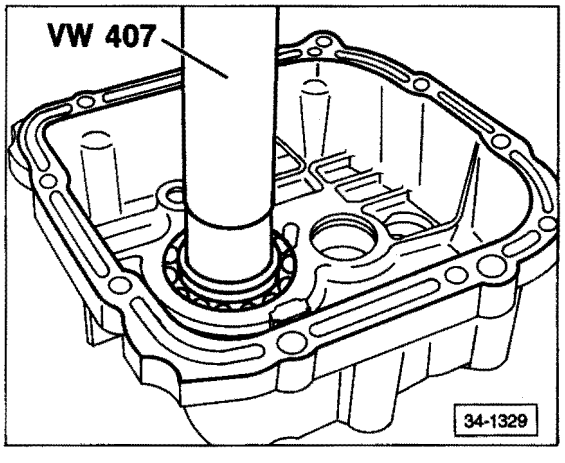

Fig. 6 Main shaft bearing, removing

— push bearing out of gear carrier

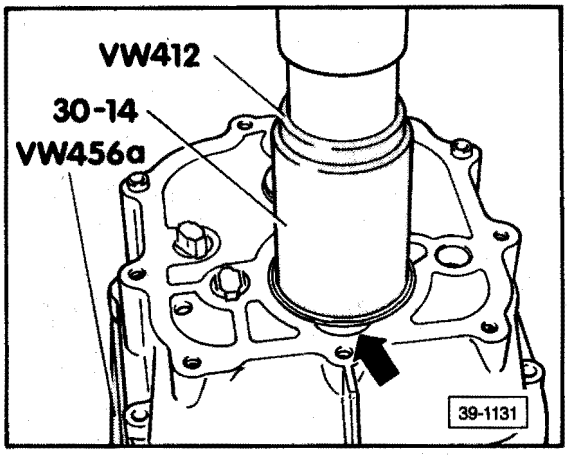

Fig. 7 Main shaft bearing, installing

— press bearing into carrier to stop
- recess on bearing aligns with recess in carrier (**arrow**)

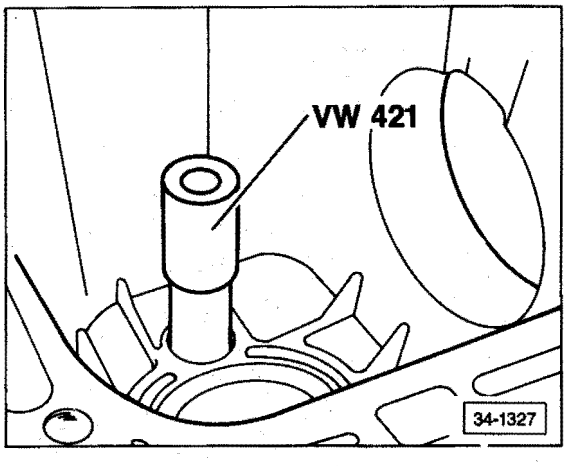

Fig. 8 Needle bearing, removing

— drive bearing out of transmission housing

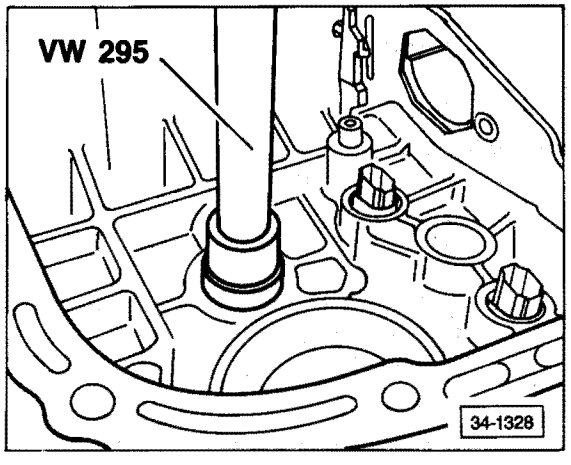

Fig. 9 Needle bearing, installing

CAUTION

The lettered side of bearing (thicker material) must face installing tool.

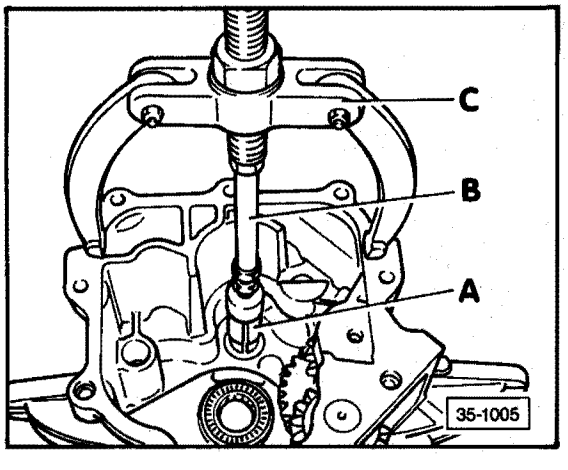

Fig. 10 Low gear needle bearing, removing

— shear off rivet head before removing bearing

A — Inner extractor 18.5-23.5 mm, e.g. Kukko 21/3

B — Extension

C — Yoke, e.g. Kukko 22/2

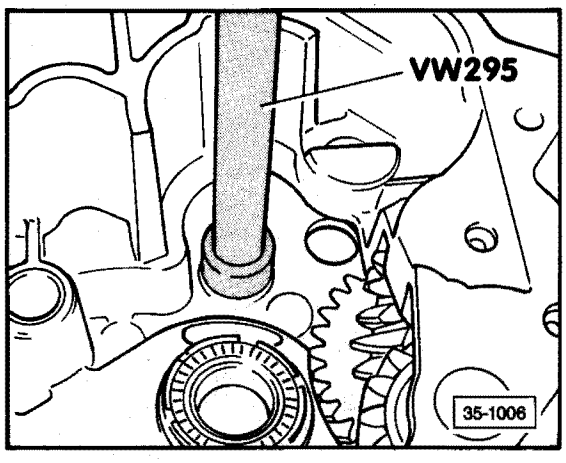

Fig. 11 Low gear needle bearing, installing

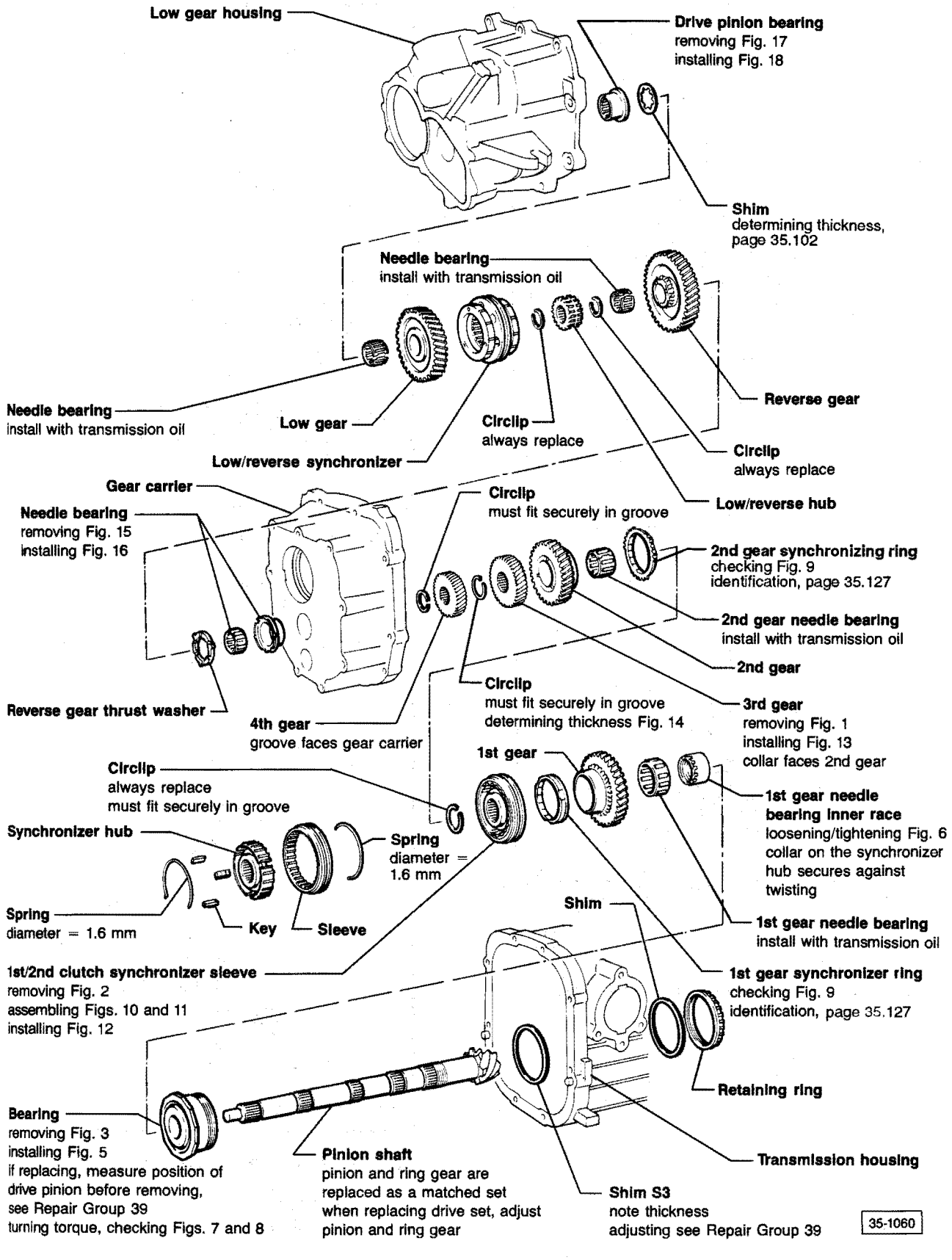
Low gear housing
Drive pinion bearing
removing Fig. 17
installing Fig. 18
Shim
determining thickness, page 35.102
Needle bearing
install with transmission oil
Needle bearing
install with transmission oil
Low gear
Circlip
always replace
Reverse gear
Low/reverse synchronizer
Circlip
always replace
Low/reverse hub
Gear carrier
Needle bearing
removing Fig. 15
installing Fig. 16
Circlip
must fit securely in groove
2nd gear synchronizing ring
checking Fig. 9
identification, page 35.127
2nd gear needle bearing
install with transmission oil
2nd gear
Reverse gear thrust washer
4th gear
groove faces gear carrier
Circlip
must fit securely in groove
determining thickness Fig. 14
3rd gear
removing Fig. 1
installing Fig. 13
collar faces 2nd gear
1st gear
Circlip
always replace
must fit securely in groove
1st gear needle bearing inner race
loosening/tightening Fig. 6
collar on the synchronizer hub secures against twisting
Synchronizer hub
Spring
diameter = 1.6 mm
Shim
Spring
diameter = 1.6 mm
Key
Sleeve
1st gear needle bearing
install with transmission oil
1st/2nd clutch synchronizer sleeve
removing Fig. 2
assembling Figs. 10 and 11
installing Fig. 12
1st gear synchronizer ring
checking Fig. 9
identification, page 35.127
Retaining ring
Bearing
removing Fig. 3
installing Fig. 5
if replacing, measure position of drive pinion before removing, see Repair Group 39
turning torque, checking Figs. 7 and 8
Pinion shaft
pinion and ring gear are replaced as a matched set
when replacing drive set, adjust pinion and ring gear
Transmission housing
Shim S3
note thickness
adjusting see Repair Group 39
35-1060

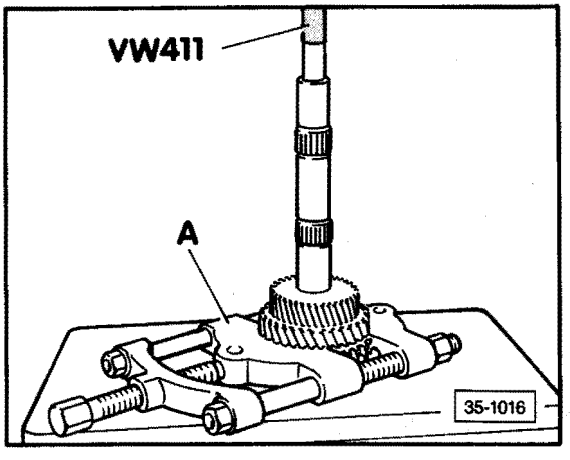

Fig. 1 3rd and 2nd gears, removing

A — Separation device 22-115 mm, e.g. Kukko 17/2

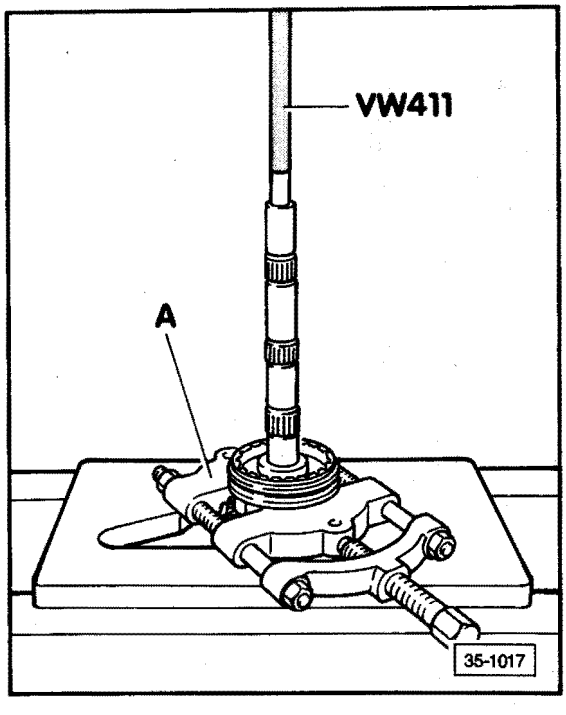

Fig. 2 Synchronizer sleeve/hub and 1st gear, removing

A — Separation device 22-115 mm, e.g. Kukko 17/2

— secure separation device behind gear

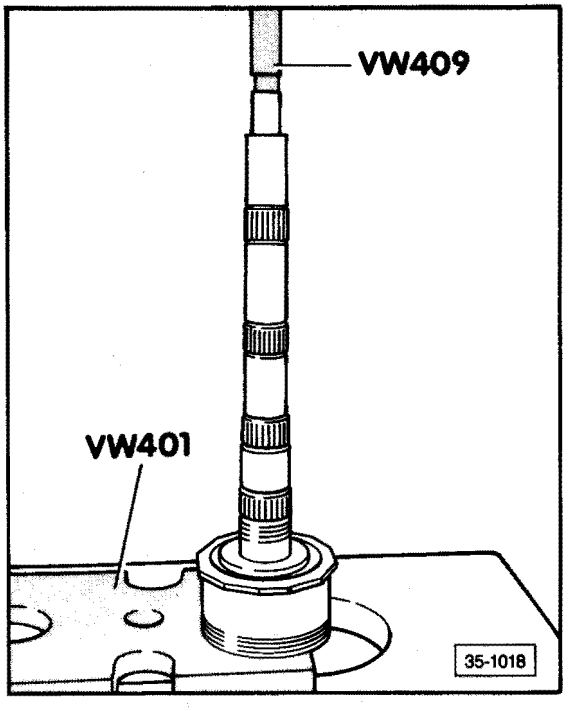

Fig. 3 Bearing, removing

— unscrew needle bearing inner race
— push bearing over outer race

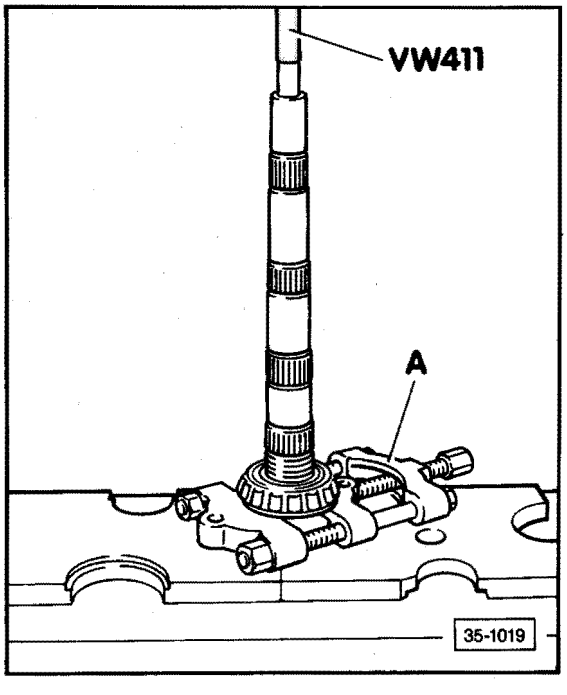

Fig. 4 Bearing inner race, removing

A — Separation device 12-175 mm, e.g. Kukko 17/1

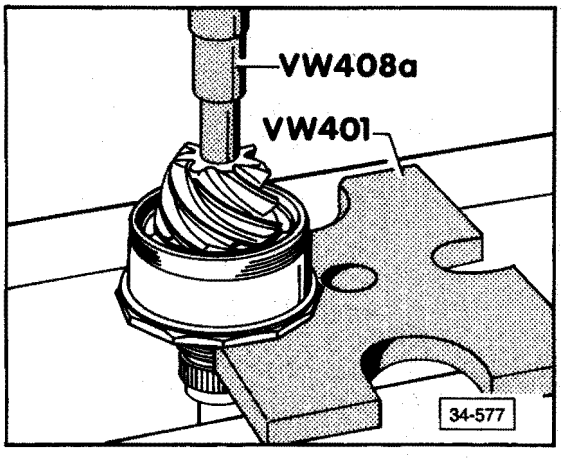

Fig. 5 Bearing, installing

— heat inner race to 100° C (212° F)
— before tightening needle bearing inner race, let bearing cool to room temperature

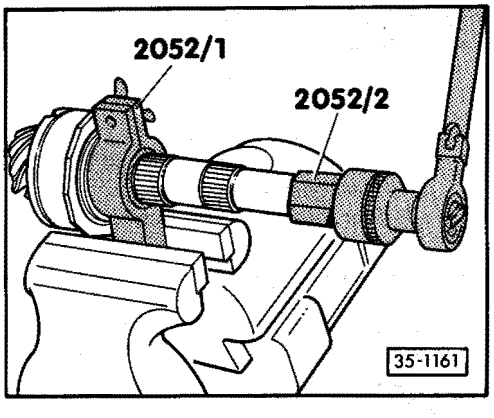

Fig. 6 Needle bearing inner race, loosening/ tightening

— heat inner race to 60° C (140° F) and screw on by hand as far as possible
— install pinion shaft into tool **2052/1** and tighten wing nut lightly
— tighten inner race to 210 Nm (152 ft lb)

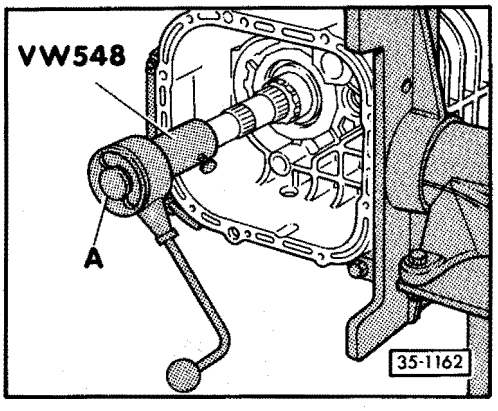

Fig. 7 Bearing, checking turning torque

A – Torque gauge, 0–600 Nm (0–54 in. lb.)
– lubricate bearings with transmission oil and tighten tension nut
– turn pinion shaft in both directions 15–20 times
– turn and read turning torque
- new bearings: up to 210 Ncm (19 in. lb.)
- used bearings (after 30 miles): up to 70 Ncm (6.2 in. lb.)

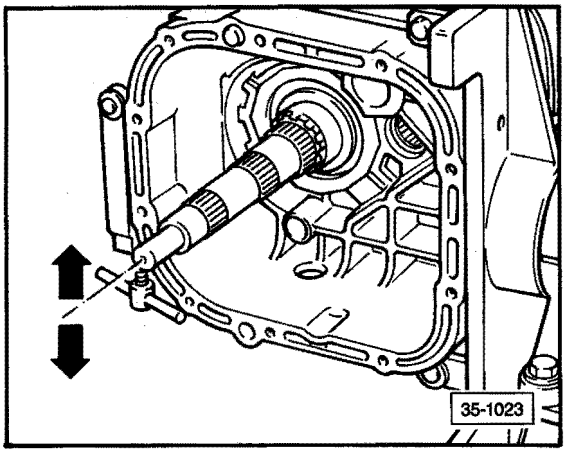

Fig. 8 Bearing condition, checking

— if turning torque cannot be measured, check for rock at end of pinion
— if there is detectable rock, replace bearing

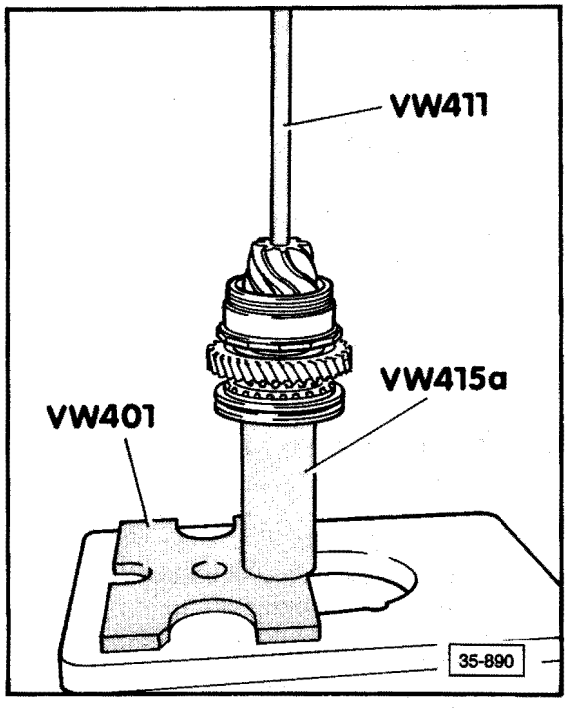

Fig. 9 1st/2nd gear synchronizer ring, checking

— press synchronizer ring onto gear by hand and measure gap **A** with feeler gauge

	New part mm (in.)	Wear limit mm (in.)
Gap **a**	1.3-1.9 (0.051-0.075)	0.5 (0.020)

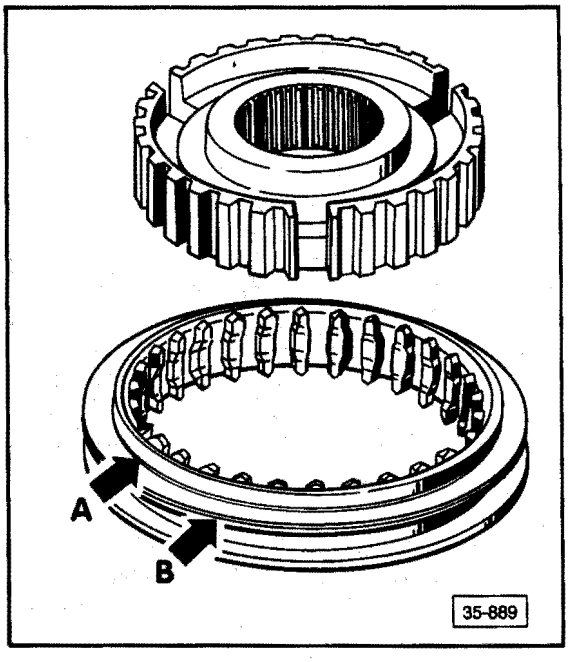

Fig. 10 1st/2nd gear synchronizer sleeve, assembling

— groove (**arrow A**) faces 2nd gear
— hub collar faces 1st gear
— grooves (**arrow B**) are for identification:
- 1st/2nd gear = 1 groove
- 3rd/4th gear = 2 grooves

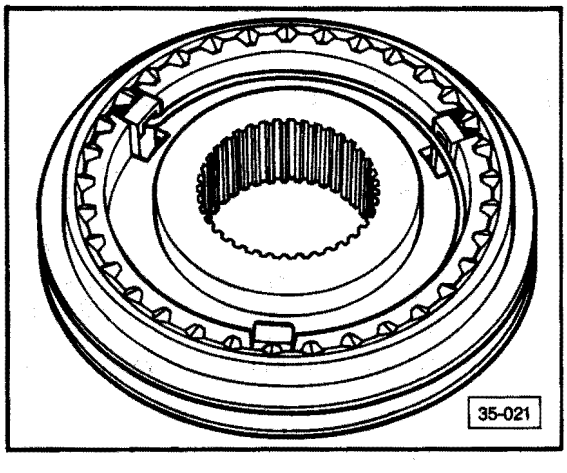

Fig. 11 1st/2nd gear synchronizer, assembling

— slide sleeve over hub, matched position is not necessary
— insert keys and install spring ends 120° apart. Angled ends of springs fit into keys

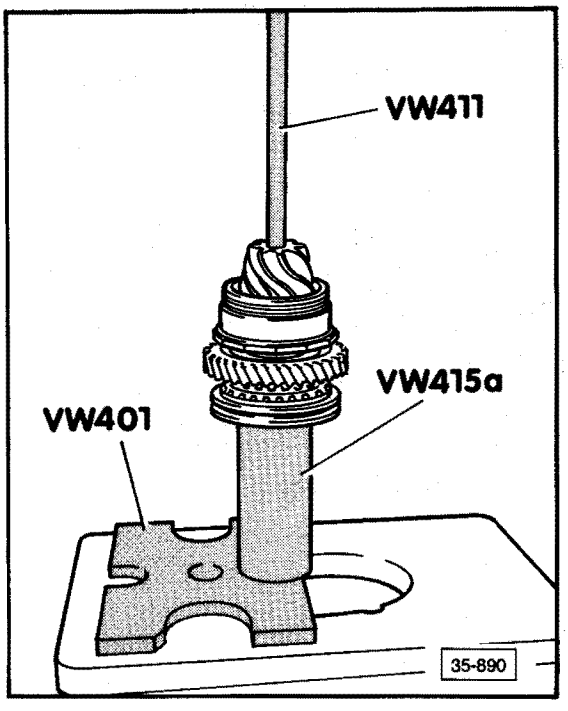

Fig. 12 1st/2nd gear synchronizer, installing

— turn synchronizer ring until grooves are in line with keys (installation position, see Fig. 10)

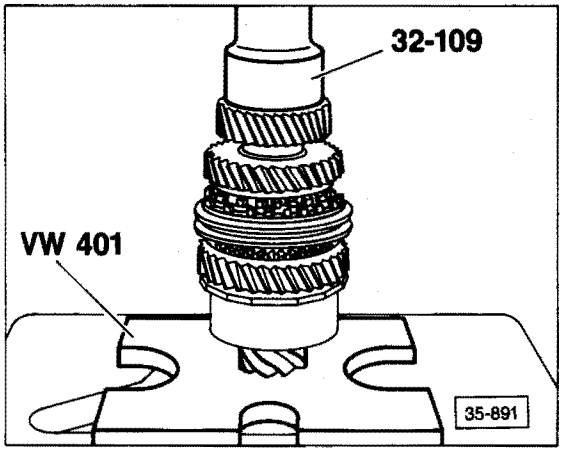

Fig. 13 3rd gear, installing

— collar faces 2nd gear

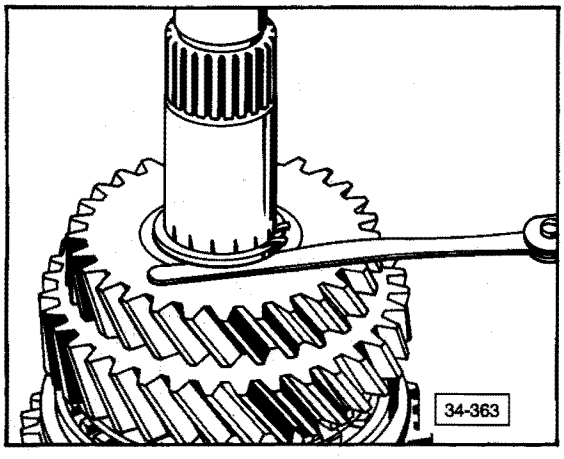

Fig. 14 3rd gear end play, adjusting

— measure end play with feeler gauge
— adjust by selecting suitable circlip
- play should be 0.05 mm-0.20 mm (try to meet lower limit)

The following circlips are available:

Thickness mm	Color	Part No.
2.20	copper	113 311 386
2.30	brass	113 311 387

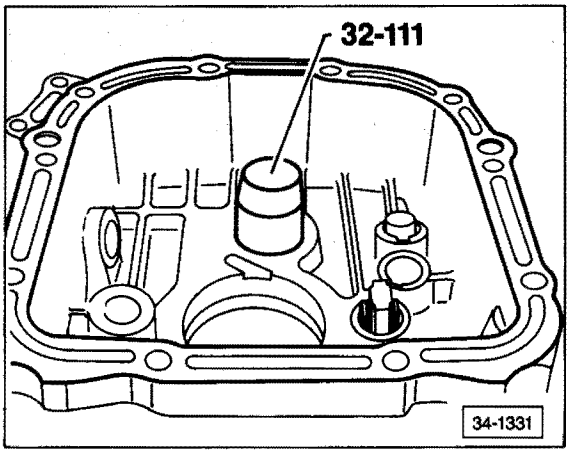

Fig. 15 Needle bearing outer race, removing

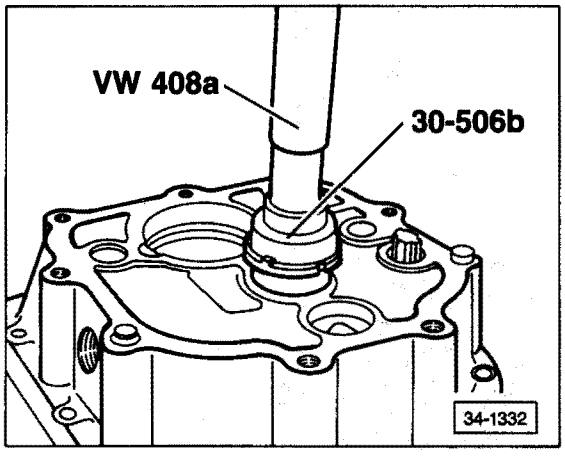

Fig. 16 Needle bearing outer race, installing

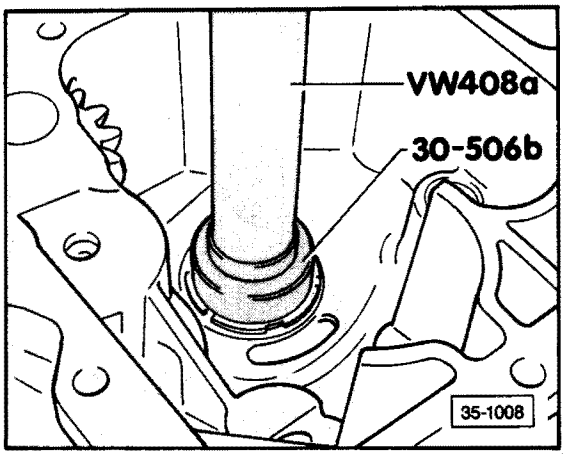

Fig. 18 Bearing, installing

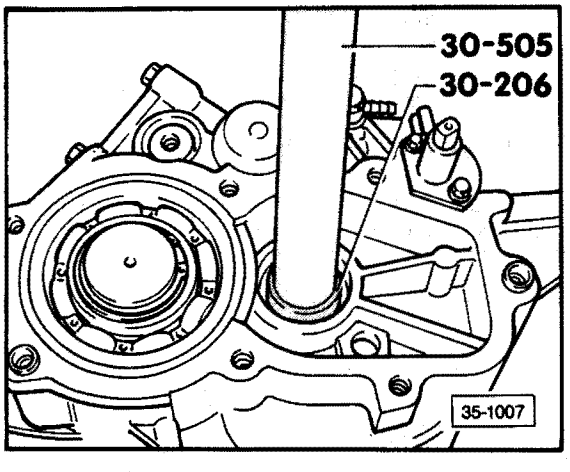

Fig. 17 Low gear bearing, removing

Synchronizer rings, identification

Note

When assembling transmission, install synchronizer rings to the same gears from which they were removed.

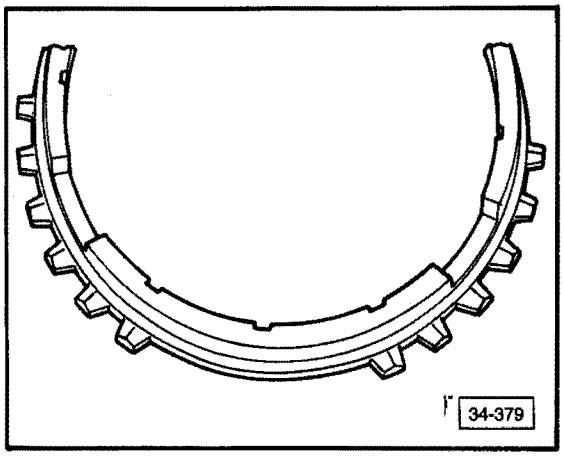

1st gear:
brass ring
molybdenum coated 3 x 6 teeth
without identification

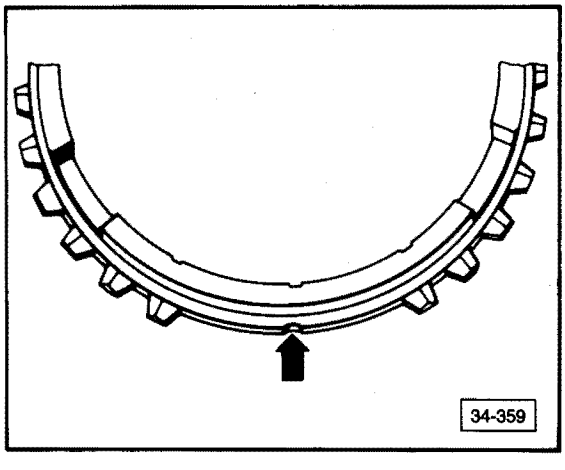

2nd gear:
brass ring
molybdenum coated 3 x 8 teeth
identification 3 notches

4th gear:
brass ring
3 x 8 teeth
identification 3 notches

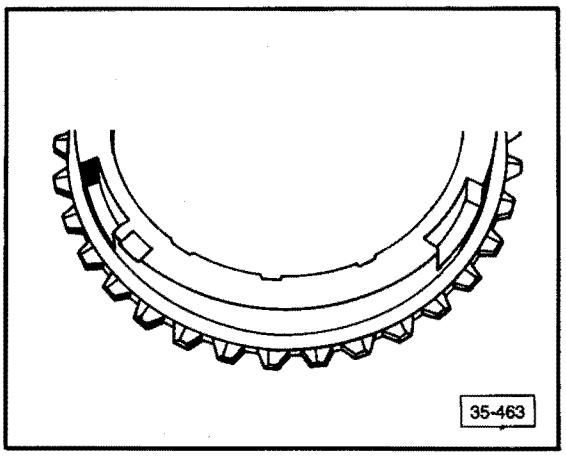

3rd gear:
special brass ring
molybdenum coated teeth around entire outer surface

Note

For all gears, install synchronizer ring which is supplied under Spare Part No. **091 311 295 A** (standard production on 3rd gear).

Automatic Transmission Controls, Assembly

Index

— Accelerator cable/linkage
090—except code letters NH 37.12, 37.13
code letters NH only 37.14, 37.15
— ATF
checking/filling 37.9
dipstick changes 37.9
troubleshooting 37.9a
— Final drive oil seal 37.10
— Installing
090—except code letters NH 37.5, 37.6
code letters NH only 37.8
— Modifications 37.19
— Operation 37.17, 37.19
— Pressure test procedure 37.18
— Removing
090—except code letters NH 37.4
code letters NH only 37.6, 37.7
— Selector lever assembly 37.2
— Selector lever cable 37.3
— Shift points 37.19
— Technical data
code letters NG, NH 37.1a
code letters NK 37.1b

Technical Data

- code letters
- application
- number of splined plates and springs
- gear ratios

Transmission code letters	NG		NH	
date of manufacture from	06/79		10/82	
to	10/82			
Type No.	090			
Torque converter code letter	Z[1]		Z	
Valve body code letters	AH	BH	FF	FFA
date of manufacture from	06/79	07/80	10/82	01/85
to	07/80	10/82	01/85	
Forward clutch number of splined plates	inner 4	outer 3	inner 4	outer 3
Direct/Reverse clutch number of springs	24		24	
number of splined plates	inner 4	outer 4	inner 4	outer 4
1st/reverse gear clutch number of splined plates	inner [2] 4	outer [2] 4	inner 4	outer 4
2nd gear brake band first tighten, then loosen:	2½ turns		2½ turns	
Application to engine	2.0 ltr. air-cooled 67 bhp SAE net		1.9 ltr. water-cooled 82 bhp SAE net	
Final drive ratio	45:11 = 4:09			
Gear ratios				
1st gear	2.55		2.71	
2nd gear	1.45		1.50	
3rd gear	1.00		1.00	
Reverse	2.46		2.43	
ATF cooler			forward flow 3-row	

1 up to build date 03/27/81 = code letter D
2 up to build date 10/1/81 = 5 inner and 5 outer plates

Technical data

Transmission	
Code letters	NK
Manufacture date	07/85 to
Automatic transmission	090
Torque converter	
Code letter	H
Valve body	
Code letters	FFA
Manufacture date	07/85 to
Number of splined plates forward clutch	inner 4 outer 3
Number of springs Number of splined plates direct/reverse clutch	24 inner 4 outer 4
Number of splined plates 1st gear clutch	inner 4 outer 4
Brake band first tighten, then loosen	2-1/2 turns
Engine application	
Type	Vanagon
Engine	2.1 Liter 90 bhp
Transmission ratios	
Final drive	45:11 = 4.09
1st gear	2.71
2nd gear	1.50
3rd gear	1.00
Reverse gear	2.43
ATF cooler	supply flow 3 row

CAUTION

Before starting to work on any part of electrical system disconnect battery ground cable

Note

Lubricate all moving parts with G-6 grease.
Accelerator/Pedal cable adjustment see pages 37.13, 37.15.

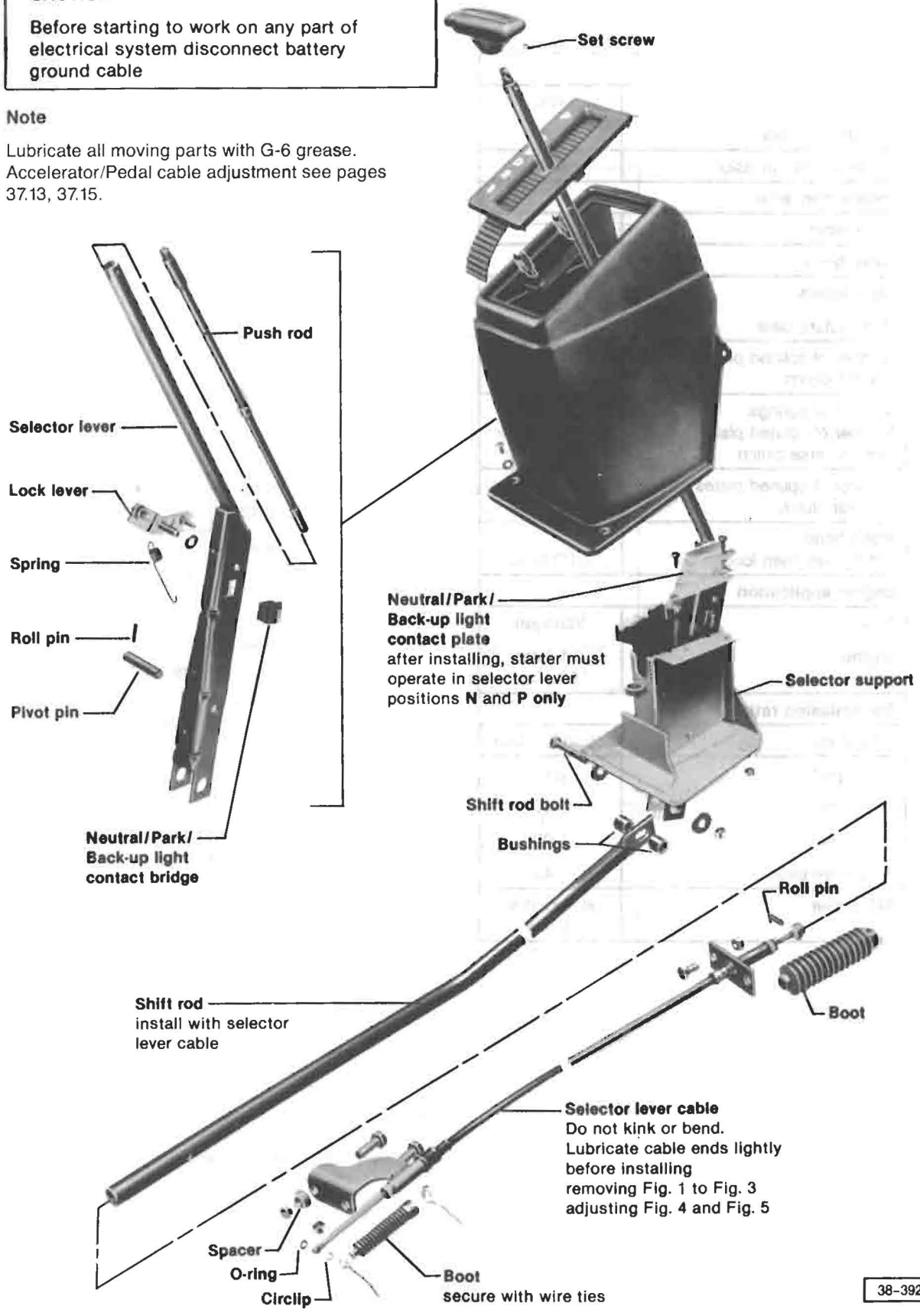

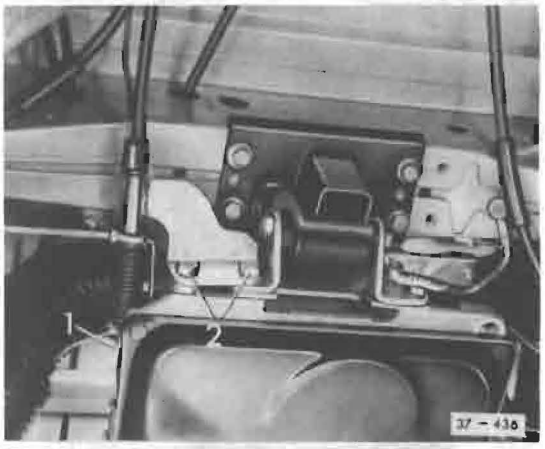

Fig. 1 Selector lever cable, removing

— remove circlip **1**
— remove selector lever cable bracket **2**

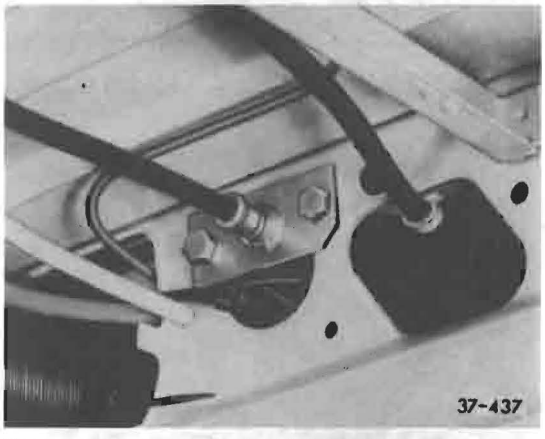

Fig. 2 Selector lever cable, removing

— remove bracket for selector lever cable/shift rod

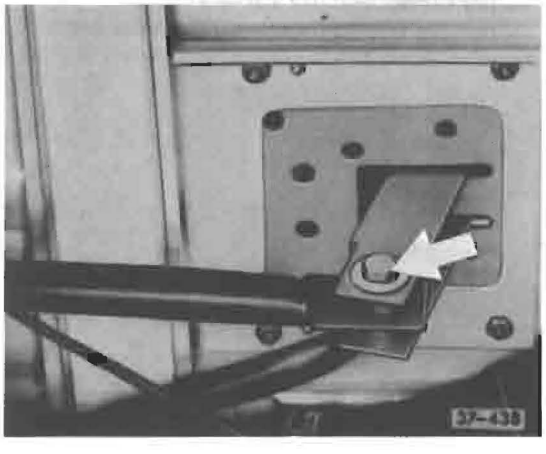

Fig. 3 Selector lever cable, removing

— remove shift rod bolt (arrow)
— guide shift rod with selector lever cable to rear
— press roll pin out of shift rod
— separate selector lever cable from shift rod

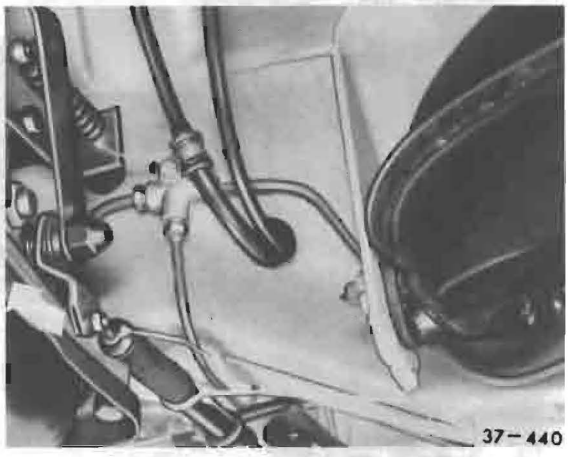

Fig. 4 Selector lever cable, adjusting

— loosen shift rod bolt (Fig. 3)
— shift selector lever into position **P**
— push transmission operating lever to rear (arrow), into **P** position

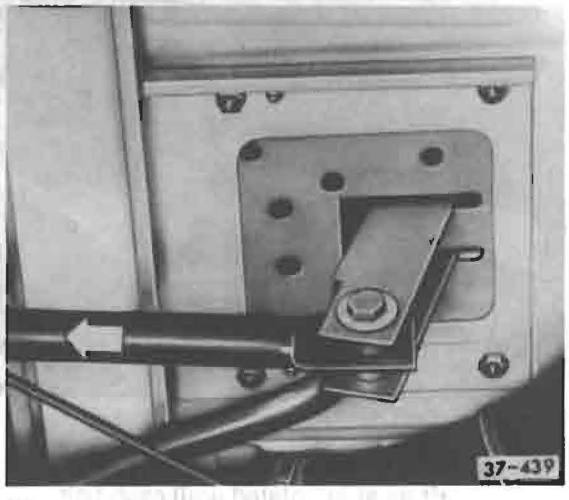

Fig. 5 Selector lever cable, adjusting

— push shift rod to rear (arrow)
— tighten shift rod bolt

Automatic transmission, removing
(except transmission 090—code letters NH)

Engine installed

Work sequence

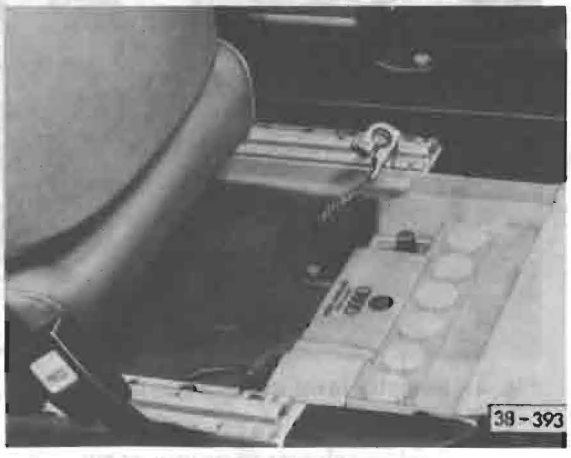

— remove battery ground strap
— remove fan housing grille



Note

To gain access to torque converter bolts, crankshaft must be rotated until each bolt appears in hole on top of transmission housing (arrow)

— remove three torque converter bolts through hole (arrow) on top of transmission housing
  • use adaptor 3052, extension and T-handle to turn crankshaft
  • pin on tool must engage in recess of cooling fan hub

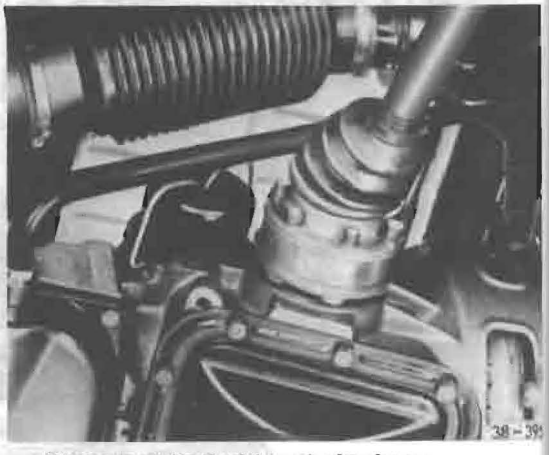

— disconnect both drive shafts from transmission
— disconnect wires from starter
— remove starter
— loosen bracket for ATF dipstick tube



— disconnect accelerator linkage 1
— pry off accelerator cable 2
— remove circlip from selector lever cable 3

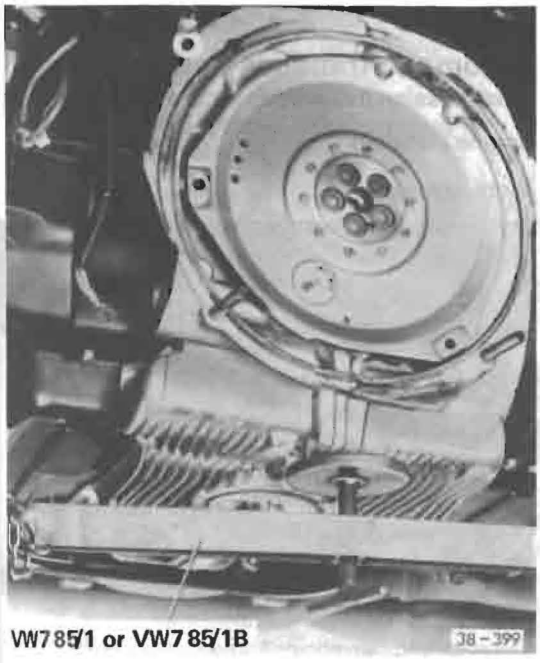

VW785/1 or VW785/1B

– install engine support tool VW 785/1 as shown



– remove ground strap **4**
– remove mounting bracket **5** and selector lever cable **6**

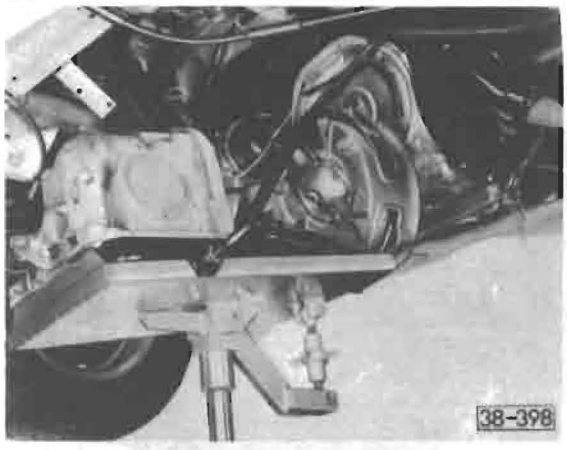

— support transmission with lifting tool US 618 and US 618/5
— remove rear transmission mount from body (4 bolts)
— remove lower engine/transmission bolts
— lower transmission out of vehicle

CAUTION

When lowering transmission out of vehicle, converter must be secured so it does not slide off transmission

Automatic transmission, installing

(except transmission 090—code letters NH)

Engine installed

Proceed in reverse order of removing and note following:

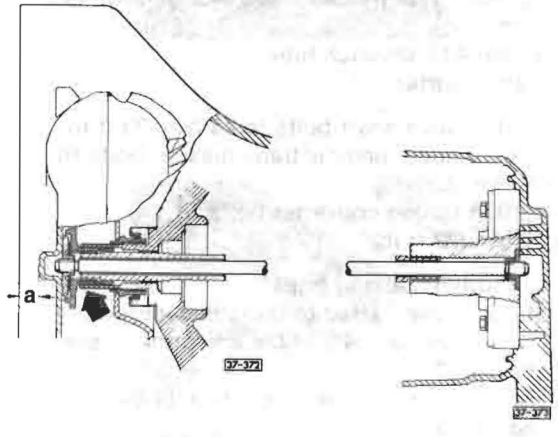

Note

When attaching transmission to engine, torque converter must be fully seated on one-way clutch support (arrow) and can be turned by hand. When converter is properly seated, **a** = 10mm (3/8 in.)

— go to next page

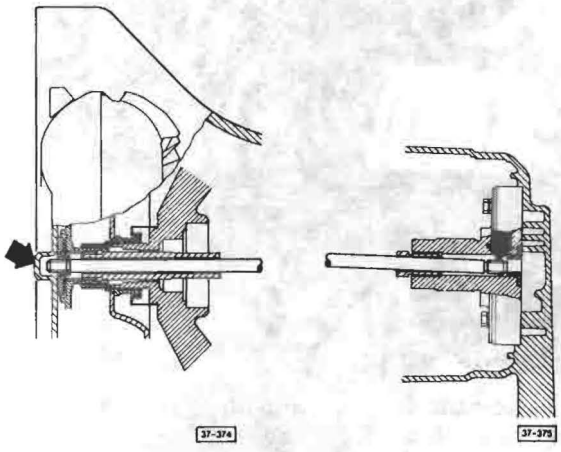

CAUTION

If torque converter (left arrow) should slip off of one-way clutch support, it could pull oil pump shaft out of oil pump (right arrow). This could cause serious damage when bolting transmission to engine

— tighten lower engine/transmission bolts to 30 Nm (22 ft lb)

Note

While tightening engine/transmission bolts, turn torque converter to check for proper seating on one-way clutch support

— tighten 4 rear transmission mount bolts to body
— attach ATF dipstick tube
— install starter

— tighten drive shaft bolts to 45 Nm (33 ft lb)
— tighten upper engine/transmission bolts to 30 Nm (22 ft lb)
— tighten torque converter bolts to 30 Nm (22 ft lb)

— install fan housing grille
— attach ground strap to transmission/body
— check selector lever cable adjustment (see page 37.3)
—check accelerator/pedal adjustment (see page 37.13)

Automatic transmission, removing
(transmission 090—code letters NH only)

Engine installed

Work sequence



— disconnect battery ground strap
— remove upper engine/transmission bolts

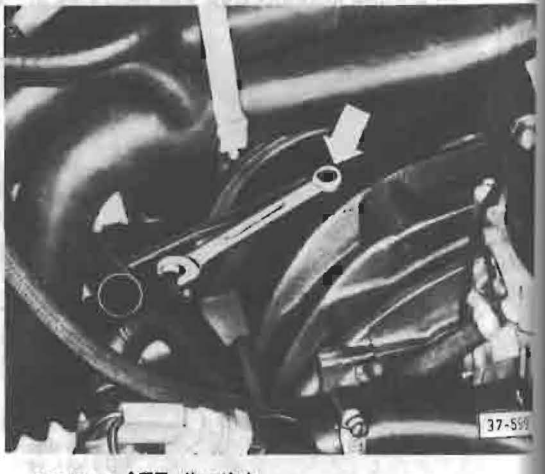

— remove ATF dipstick
— remove bolt (arrow) for ATF dipstick tube bracket



— remove three torque converter bolts through hole (arrow) on top of transmission housing

Note

Crankshaft must be rotated to gain access to torque converter bolts

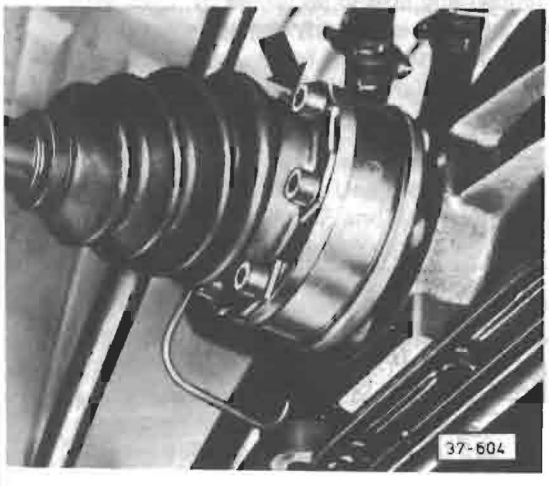

– disconnect both axle shafts from transmission flanges
– disconnect wires from starter
– remove starter

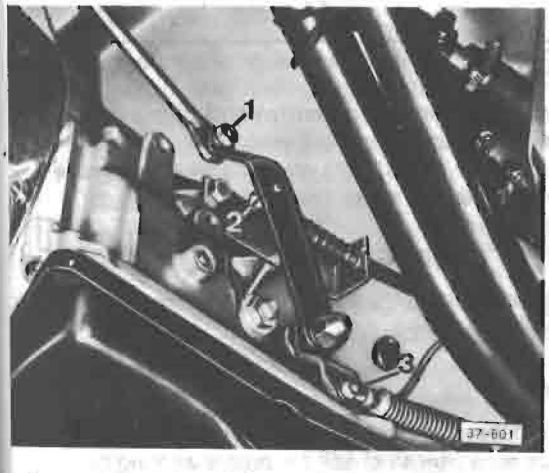

– disconnect push rod from transmission kickdown lever by removing nut **1**
– pry off ball socket **2** for accelerator cable and remove cable from bracket
– remove circlip **3** for selector lever cable to disconnect cable

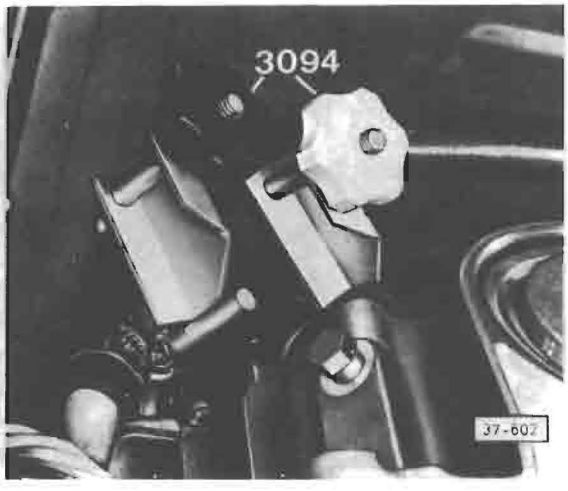

— clamp coolant hoses and remove

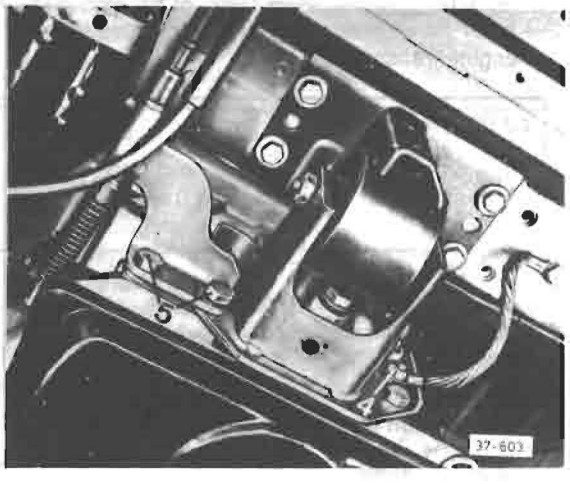

— disconnect ground strap **4**
— remove mounting bracket bolts **5** and selector lever cable

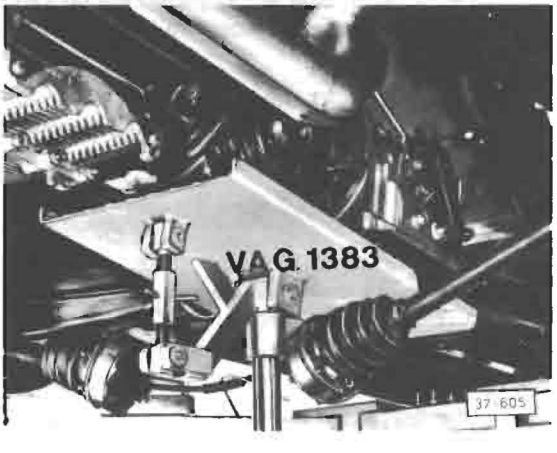

— support transmission with US 4470

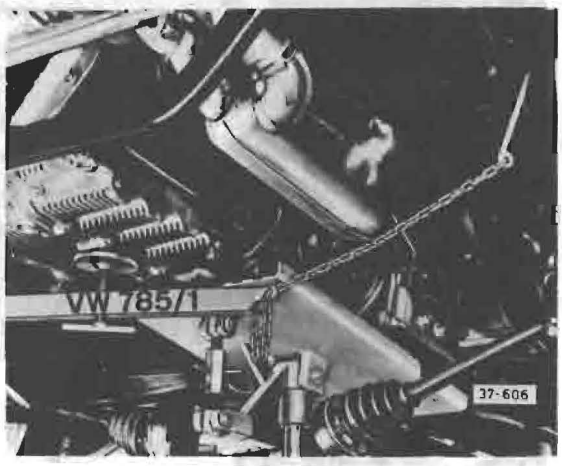

— support engine with VW 785/1 or VW 785/1B
— remove rear transmission mount from body (4 bolts)
— lower transmission slightly and remove lower engine/transmission bolt

CAUTION

Torque converter must be secured from sliding off transmission when lowering transmission out of vehicle.

— separate transmission from engine
— lower transmission carefully out of vehicle

Automatic transmission, installing
(transmission 090—code letters NH only)

Engine installed

Work sequence

Proceed in reverse order of removal and note following:

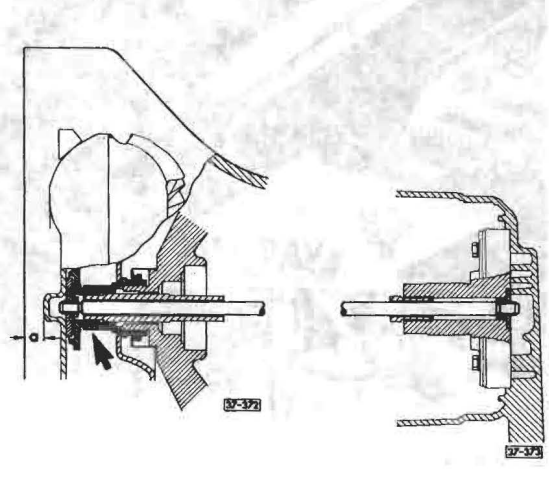

Note

When attaching transmission to engine, torque converter must be fully seated on one-way clutch support (arrow) and able to be turned by hand. When torque converter is properly seated, **a** = 10 mm (3/8 in)

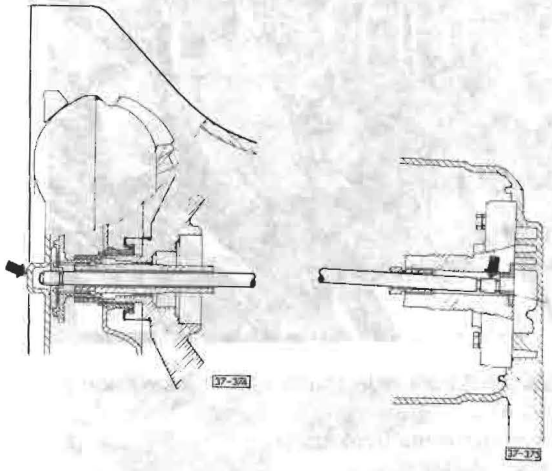

CAUTION

If torque converter (left arrow) should slip off of one-way clutch support, it could pull oil pump shaft out of pump (right arrow). This could cause serious damage when bolting transmission to engine.

— tighten lower engine/transmission bolts to 55 Nm (41 ft lb)

Note

While tightening engine/transmission bolts, turn torque converter to check for proper seating on one-way clutch support.

— tighten four rear transmission mount bolts to body to 40 Nm (30 ft lb)
— tighten axle shaft bolts to 45 Nm (33 ft lb)
— tighten upper engine/transmission bolts to 55 Nm (41 ft lb)
— tighten torque converter bolts to 30 Nm (22 ft lb)
—check selector lever cable and accelerator linkage adjustment (see pages 37.14, 37.15)

ATF, filling

CAUTION

Automatic transmission fluids labeled **DEXRON®** or **DEXRON II®** must be used. All makes or brands of **DEXRON®** ATF may be mixed with one another. Do not use additives.

Tiny particles, dirt or even lint can clog transmission valves. Use only clean funnel and hose to add ATF and wipe dipstick only with clean lint-free cloth

— refill transmission with approved type ATF fluid through ATF dipstick tube with funnel and hose
  • refill capacity 2.5 ltr (2.6 US qt)
— set parking brake, start engine
— move selector lever through all gear positions
— check ATF level and top up to lower mark if necessary
— warm up ATF and check fluid level again
  • must be between two marks on dipstick

ATF level, checking

- ATF at operating temperature of approx. 60°C (attained after driving approx. 6 miles after a cold start)
- vehicle on a level surface
- parking brake engaged
- selector lever at "P"
- engine idling
- use a lint-free cloth to wipe dipstick

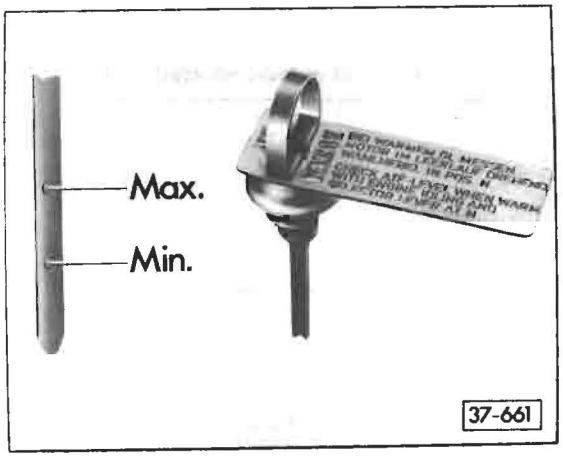

Current ATF dipstick

- difference between Min./Max. marks: 0.35 qts. (0.33 L)
- when cold, fill to below the Min. mark, warm up to operating temperature and fill to between marks

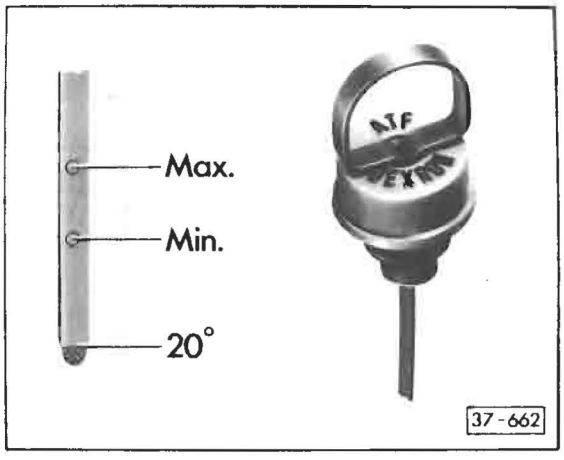

New ATF dipstick

- difference between Min./Max. marks: 0.24 qts. (0.23 L)
- when cold, fill to 20°C mark, warm up to operating temperature and fill to between marks

CAUTION

Do **NOT** overfill. Too much ATF can cause damage and must be drained.

Use only ATF marked DEXRON. Do **NOT** use any lubricant additives.

The ATF used in production vehicles has changed in composition and color from that used in previous years (1980-84).

previous color: red

new color: red/brown

The new ATF discolors to black/brown after only short running times. This discoloration has no effect on the quality of the fluid. Changing the fluid is necessary at the recommended service intervals only.

The new ATF and types of ATF DEXRON used previously can be mixed.

ATF level, checking/troubleshooting

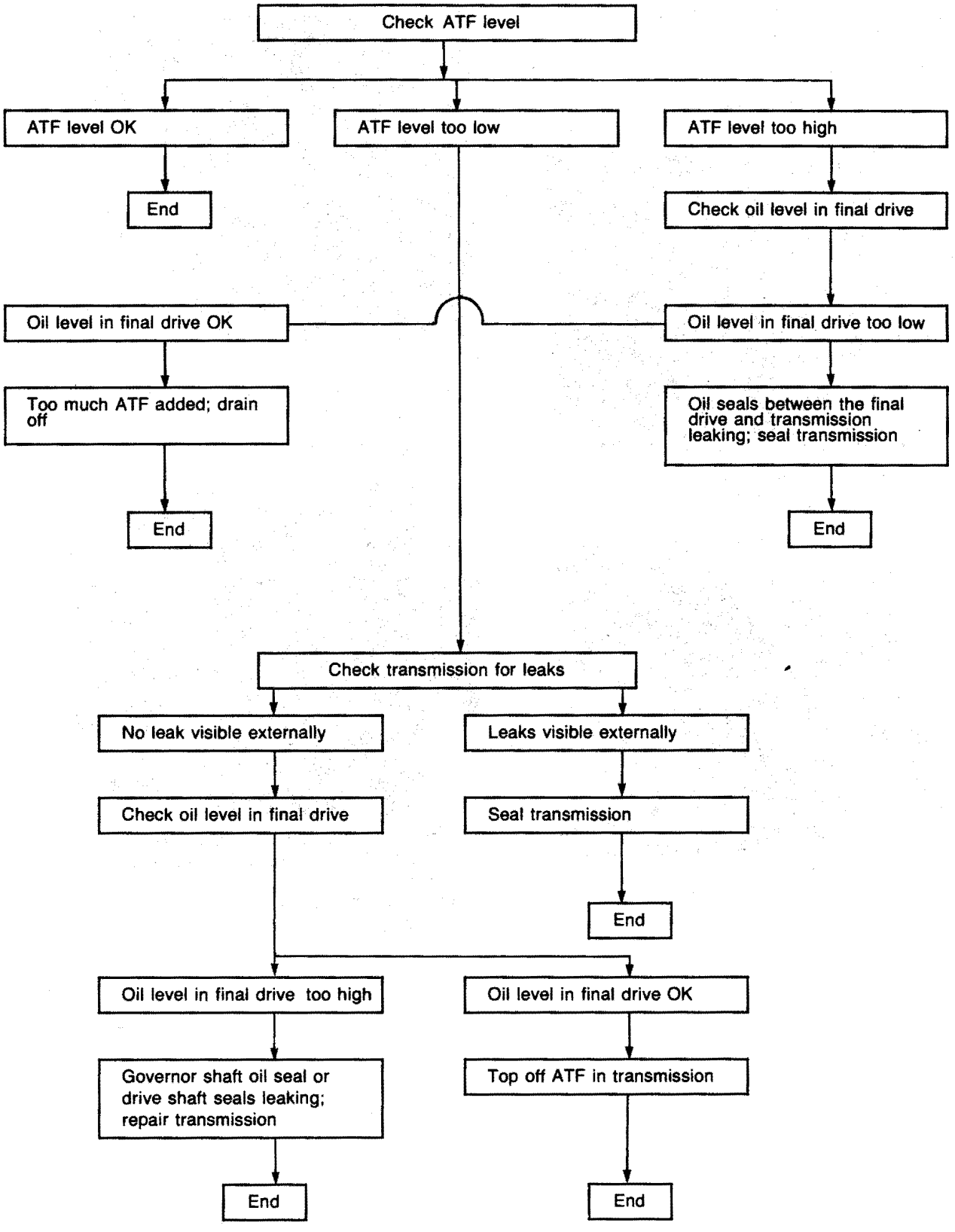

Final drive oil seals, replacing
(Transmission installed)

Work sequence

— detach drive shaft from flange

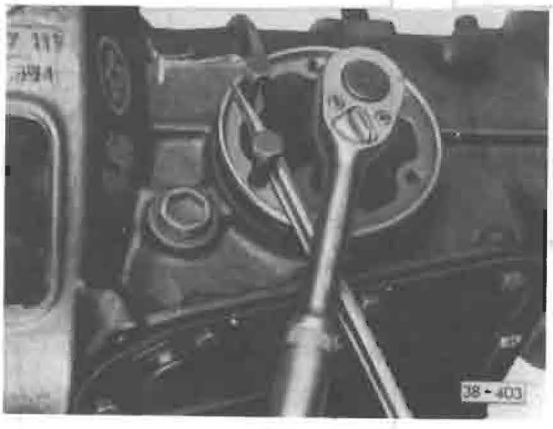

— place drip pan underneath
— remove drive shaft flange



— pry out seal

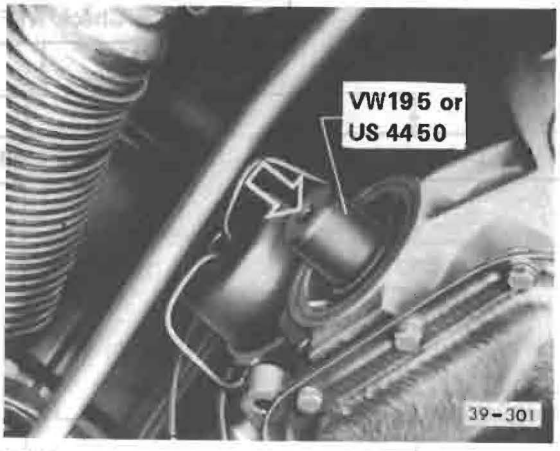

Note

When installing oil seals, fill space between seal lips with multi-purpose grease

— drive seal in until fully seated

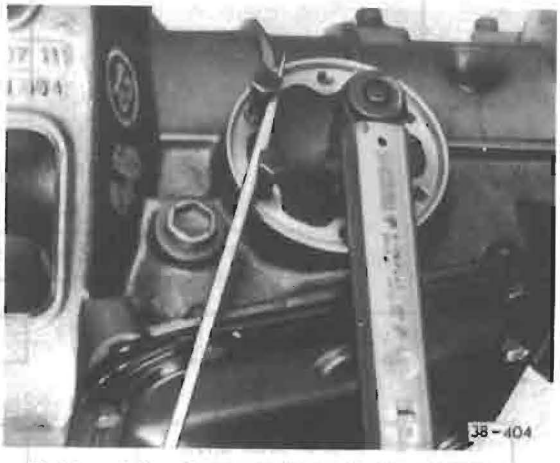

— tighten drive flange bolt to 25 Nm (18 ft lb) and drive shaft mounting bolts to 45 Nm (33 ft lb)
— check transmission oil level and add if necessary

THIS PAGE INTENTIONALLY
LEFT BLANK

Accelerator linkage
(except transmission 090—code letters NH)

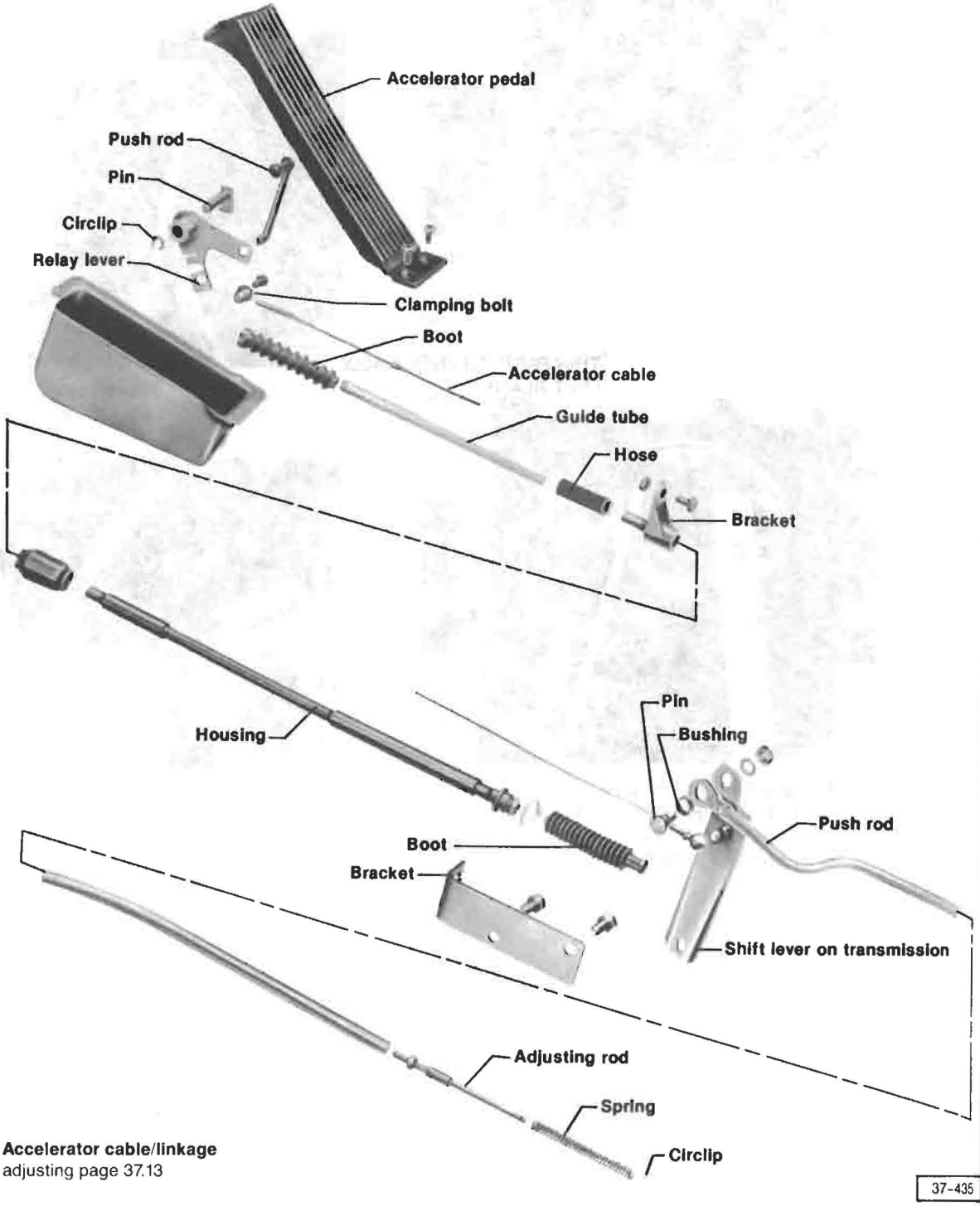

Accelerator cable/linkage
adjusting page 37.13

Accelerator linkage/cable adjustment, checking
(except transmission 090—code letters NH)

Work sequence

– depress accelerator pedal to full throttle position
  • throttle valve lever must contact stop, but kickdown lever on transmission must **not** be in kickdown position
– press accelerator pedal beyond full throttle to floor
  • override spring must be tensioned and kickdown lever on transmission must be in kickdown position

if NO, adjust as follows:

Accelerator linkage/cable, adjusting

Work sequence

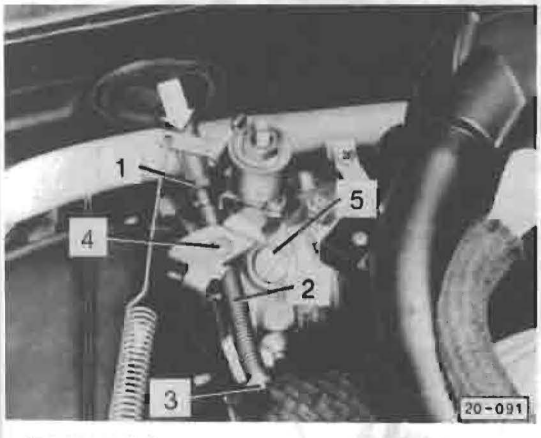

– loosen nut **1**
– remove override spring **2**
– start engine and let idle

– adjust idle speed at screw **5** (see Repair Group 24)
– shut engine **OFF**
– press accelerator rod in direction of arrow to stop

– turn adjusting rod **3** with screwdriver until shoulder of adjusting rod just contacts pivot of throttle lever **4**
– reinstall override spring **2**
– start engine and check idle speed
  • adjust if necessary by turning rod **3**
– lock adjusting rod **3** in position with nut **1**

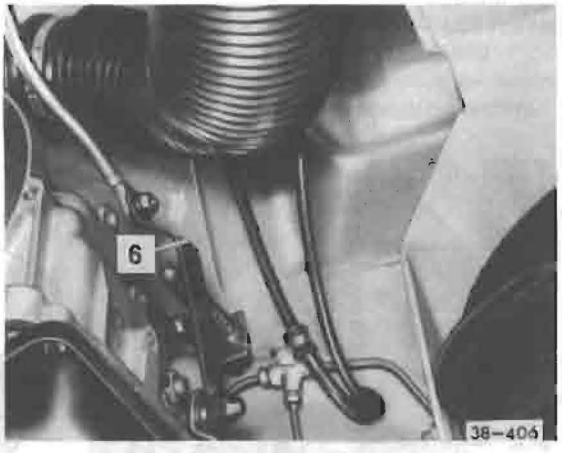

— press accelerator pedal to floor
  • lever **6** must be in kickdown position (arrow), with approx. 1-2mm (1/32-3/32 in.) free play between lever and stop
— release accelerator pedal
— lever must be in idle position (out of kickdown)

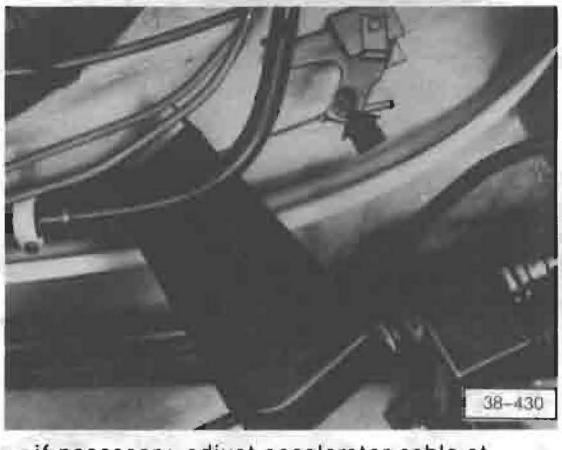

— if necessary, adjust accelerator cable at clamping bolt (arrow)

Accelerator linkage
(transmission 090—code letters NH only)

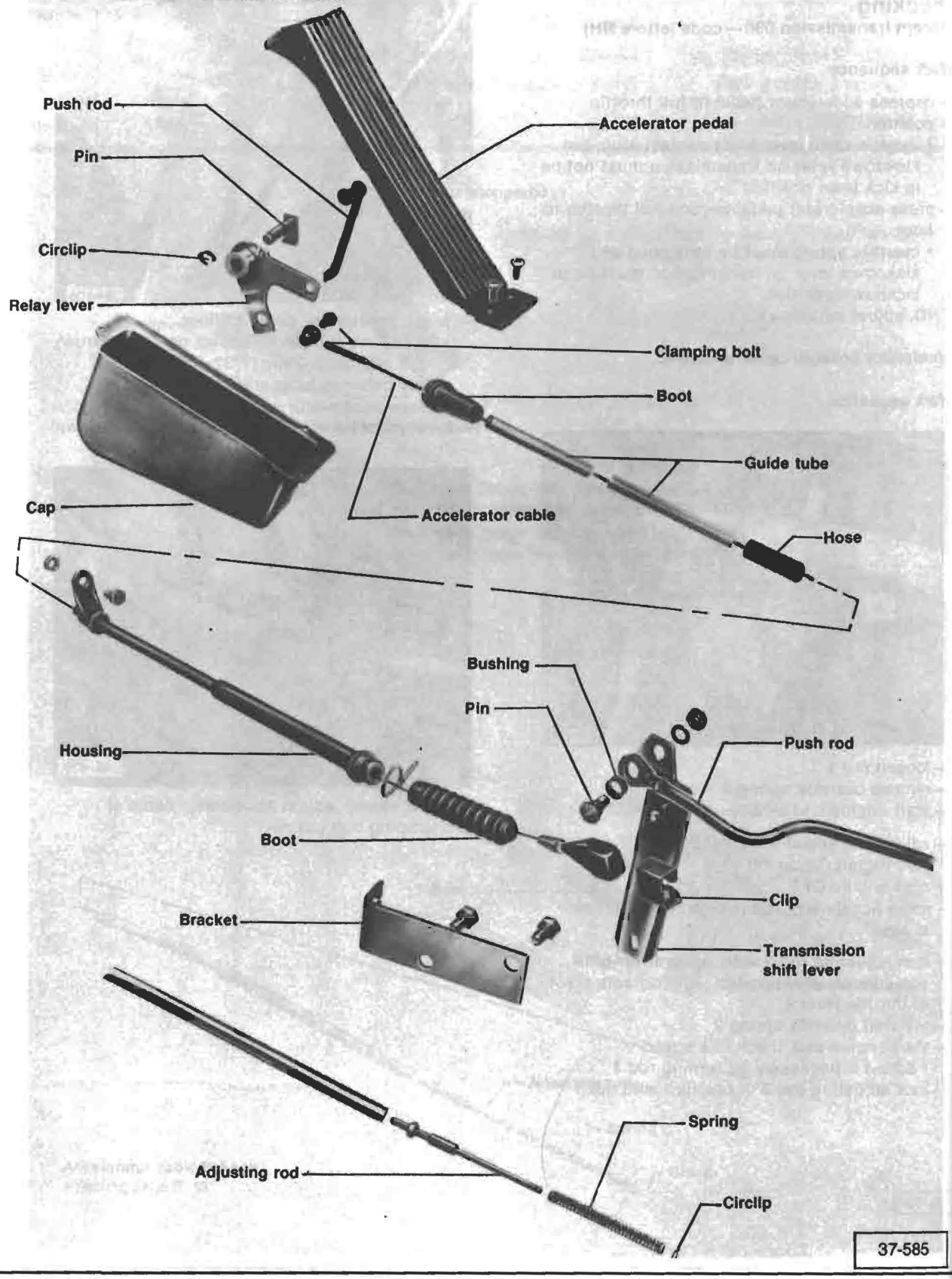

Accelerator linkage/cable adjustment, checking

(transmission 090—code letters NH only)

Work sequence

— depress accelerator pedal to full throttle position
  • throttle valve lever must contact stop, but kickdown lever on transmission must **not** be in kickdown position
— press accelerator pedal beyond full throttle to floor
  • override sping must be compressed and kickdown lever on transmission must be in kickdown position

If **NO**, adjust as follows:

Accelerator linkage/cable, adjusting

Work sequence

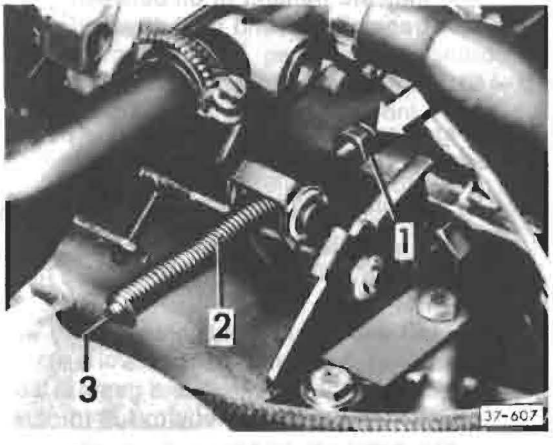

— loosen nut **1**
— remove override spring **2**
— start engine and run at idle

— check and adjust idle if necessary (see Repair Group 24)
— shut engine **OFF**
— pull accelerator rod in direction of arrow to stop (closed throttle position)

— turn adjusting rod **3** with screwdriver until shoulder of adjusting rod just contacts pivot of throttle lever

— reinstall override spring **2**
— start engine and check idle speed
— if necessary, adjust idle speed by turning rod **3**
— lock adjusting rod **3** in position with nut **1**

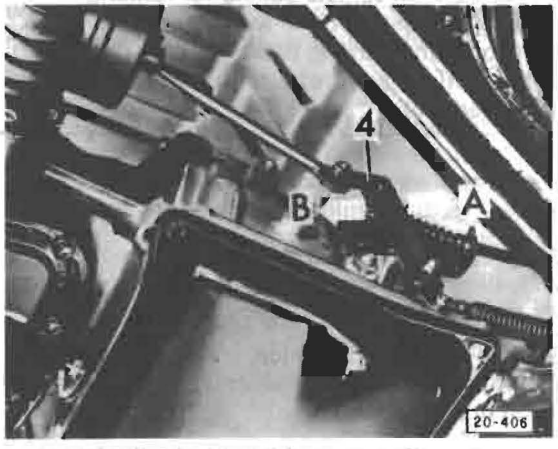

— press accelerator pedal to floor
  • kickdown lever **4** must be in kickdown position on stop (arrow **A**)
— release accelerator pedal
  • kickdown lever **4** must be in closed throttle position on stop (arrow **B**)

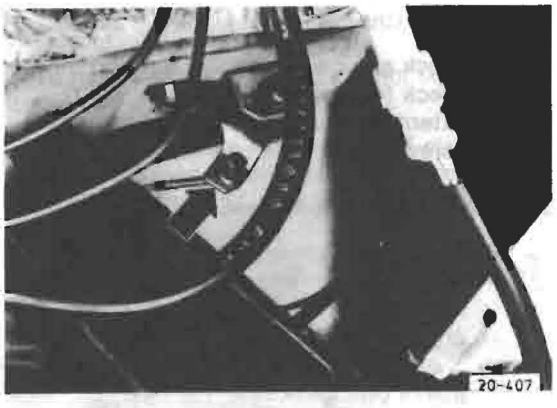

— if necessary, adjust accelerator cable at clamping bolt (arrow)

Transmission operation, checking

CAUTION

All work on vehicle calling for running engine must be done with selector lever at **N** or **P** and parking brake applied. Only exceptions are pressure test and stall speed test

For proper transmission operation, engine idle speed, ignition timing, etc. must be correct.

Poor engine output because of incorrect adjustments or worn parts may give impression of problems with automatic transmission.

Before checking operation, try to find out how problem developed and whether any repairs had been done before.

Trouble is often caused by out of adjustment selector lever cable/accelerator cable, low ATF level or improperly tuned engine.

Before performing tests, do general checks **A** and road test **E**. If problem still exists, proceed with tests **B** to **E**.

A — General Checks

— check engine idle speed, ignition timing
— check for leaks (ATF or hypoid oil), external damage, loose or missing screws, etc.

B — Transmission fluid level, checking

— check that vehicle is level
— place selector lever in **P** and apply parking brake. Idle engine. (ATF must be lukewarm)
— check that ATF level is between two marks on dipstick

- difference between upper and lower marks is approx. 0.5 ltr (0.5 US qt)

— add ATF fluid if necessary

CAUTION

Tiny particles, dirt or even lint can clog transmission valves. Use only clean funnel and hose to add ATF and wipe dipstick only with clean lint-free cloth

- do not overfill, too much fluid will upset operation of transmission

— check smell and appearance of ATF. Burnt smell may indicate burnt friction linings and trouble in control system

CAUTION

Automatic transmission fluids labeled **DEXRON®** or **DEXRON II®** must be used. All makes or brands of **DEXRON®** ATF may be mixed with one another. Do not use additives.

C — Final drive oil level, checking

- final drive oil level must be up to edge of oil filler hole
- if level is too high or too low it may indicate transfer of oil between transmission and final drive

D — Stall speed test

Check stall speed only if vehicle shows poor performance or poor acceleration

- engine must be warm

— connect tachometer (use adapter to avoid damage to electronic ignition, see Repair Group 28)
— start engine and hold vehicle firmly with parking brake and foot brake
— put selector lever in **D** and depress accelerator pedal briefly to full throttle
—check that engine now runs between

- 1950 and 2250 rpm (stall speed) for all automatic transmissions except 090—code letters NH
- 2450 and 2750 rpm (stall speed) for automatic transmissions 090—code letters NH only
- 2500 and 2750 - code letters NH

CAUTION

Do not continue stall speed test longer than time required to read tachometer. Maximum stall speed test time 5 seconds. If necessary to repeat test, wait at least 20 seconds.

Note

Normal stall speed will drop 125 rpm per 3200 ft altitude. Stall speed will also drop slightly at high ambient air temperature

— if stall speed is not as specified, refer to troubleshooting table as follows:

Effect	Cause
Stall speed too high	forward clutch or one-way clutch for 1st gear slipping If stall speed rpm in range **D** is too high repeat test in range **1** • if stall speed rpm is within specifications one-way clutch for 1st gear is defective • if stall speed rpm is still too high, forward clutch is defective
Stall speed too low	
a—if approx. 200 rpm below specified figure	poor engine performance (ignition timing, fuel injection, compression)
b—if approx. 400 rpm below specified figure	stator one-way clutch defective (replace torque converter)

E — Road test

Vehicle should be driven in all gear ranges and under all possible road conditions. Do not road test if there is obvious mechanical damage

Shift Points in km/h (mph)

Transmission 090 up to transmission No. 16 07 0 (except code letters NH)		
Shift	**Full throttle**	**Kickdown**
1-3	26-33 (16-21)	48-52 (30-32)
2-3	67-72 (42-45)	88-91 (55-57)
3-2	41-48 (25-30)	84-86 (52-53)
2-1	19-22 (12-14)	43-47 (27-29)

Transmission 090—code letters NH only		
Shift	**Full throttle**	**Kickdown**
1-2	25-40 (16-25)	50-53 (31-33)
2-3	59-74 (37-46)	85-87 (53-55)
3-2	43-58 (27-36)	80-83 (50-52)
2-1	17-22 (11-14)	39-42 (24-26)

Transmission 090— from transmission No. 17 07 0 (except code letters NH)

—see page 37.19

When checking shift points, speedometer readings may vary within permissible manufacturing tolerances.

— note shift points and compare to chart above. Shifts should be smooth and should take place quickly and without lag in power transmission
— listen for any sign of engine speedup between shifts which indicates slipping brake bands or clutches
— after road test, check transmission for fluid leaks

Note

If shift points are incorrect or transmission does not kick down, check accelerator cable adjustments.

F — Pressure test

Note

Pressure test only if defect cannot be found during other checks.

This test will locate defects in ATF circuit (internal leakage, wear, sticking control valves or dirt in ATF system)

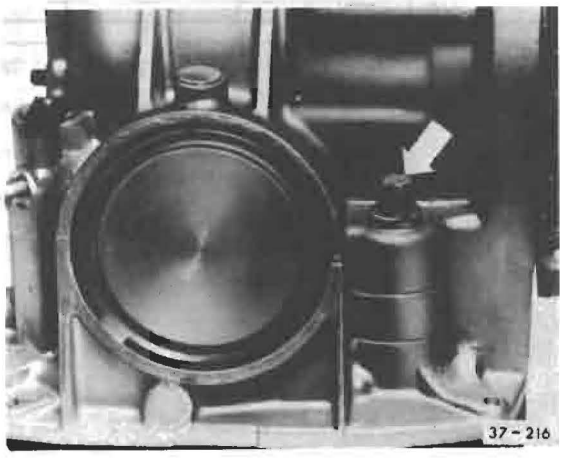

• gauge connection (arrow)

— go to next page

Test procedure

— connect gauge with 0-10 kg/cm² (0-142 psi) scale
— measure three different main pressures as follows:

Selector lever position	Accelerator pedal position	Code letters	Main pressure kg/cm² (psi)	Test conditions
D	idle speed	NG NH NK	2.90-3.00 (41-43)	accelerate to 50 km/h (31 mph), release accelerator pedal (idle speed) and check pressure on gauge*
	full throttle	NG NH	5.85-5.95 (83-84)	*
		NK	6.80-6.90 (96-98)	
R	idle speed	NG	7.62-8.22 (108-117)	vehicle stationary
		NG (from17 070)	9.10-9.70 (129-138)	
		NH NK	9.00-10.00 (128-142)	

*These tests should be performed on a dynamometer

If specified values are not reached, check following:

Fault	Remedy
Oil pump defective	Check pump for wear, replace if necessary
Oil leaks at seals and sealing surfaces or leakage in housing	Check for leaks, particularly at valve body transfer plate
Sticking control valve	Disassemble and clean valve body, check valves for free movement

Shift points In km/h (mph)

Transmission 090 — code letters NG (from transmission 17 07 0)		
Shift	**Full throttle**	**Kickdown**
1-2	25-36 (16-22)	49-52 (30-32)
2-3	60-76 (37-47)	89-90 (55-56)
3-2	43-60 (27-37)	84-86 (52-53)
2-1	17-20 (11-12)	44-47 (27-29)

Transmission 090 — code letters NK		
Shift	**Full throttle**	**Kickdown**
1-2	22-38 (13-24)	48-58 (30-36)
2-3	59-73 (37-45)	86-95 (53-59
3-2	36-56 (22-35)	76-86 (47-53)
2-1	14-19 (9-12)	37-47 (23-29)

Clutch and brake band operation

This table shows which shift components are in operation in various gears.

It provides basis for determining which shift components are not working properly when complaints are made of poor acceleration, faulty shifting or general transmission defects.

Example: No drive in 3rd and R gears
Possible cause; D + R clutch does not work (must be applied)

Selector lever position	**1**	**2 or D**	**2 or D**	**D**	**R**
Gears	**1st**	**1st**	**2nd**	**3rd**	**Reverse**
Forward clutch	applied	applied	applied	applied	released
D + R clutch	released	released	released	applied	applied
1st + R gear brake plates	applied	released	released	released	applied
2nd gear brake band	released	released	applied	released	released
One-way clutch	inactive	holding	overrun	overrun	inactive

Automatic Transmission
Case, Gears, Shafts

Index

— Apply shell 38.10
— Direct/Reverse/Forward clutches
installing 38.11
— Forward clutch 38.8, 38.17
— Governor
disassembling/assembling
trans. 090 code letters NG 38.22
removing/installing
trans. 090 except code letters NG
38.23
— Governor drive gear 38.14
— Kickdown lever modification
trans 090 code letters
NH, NK 38.39
— Manual valve 38.35
— Oil pump 38.8, 38.22
— One-way clutch 38.12, 38.14
with plastic cage 38.16
— Operating rod 38.35
— Parking lock 38.34
modification trans. 090
code letters NH, NK 38.39
— Pump shaft 38.3
— Reverse planetary gear set 38.12
— Reverse planetary ring gear 38.14
— Separation plate
trans. 090 code letters NG 38.26
trans. 090 code letters NG from
trans. no. 17 07 0 38.28
trans. 090 code letters
NH, NK 38.37
— Spacer springs and rollers 38.15
— Spring table
trans. 090 code letters NH, NK
up to trans. no. 16 07 0 38.30
trans. 090 code letters NG from
trans. no. 17 07 0 38.32
— Transfer plate
trans. 090 code letters NG 38.26
trans. 090 code letters NG from
trans. no. 17 07 0 38.28
trans. 090 code letters
NH, NK 38.37
— Transmission
assembly 38.7
— Transmission 090 modifications
code letters NH, NK 38.13
— Transmission/Final drive
assembly 38.2
end play 38.5
separating 38.3
— Transmission housing studs 38.4
— Turbine shaft 38.3
— Valve body
removing/installing 38.25
trans 090 code letters NG 38.26
trans 090 code letters NG
from trans. no. 17 07 0 38.28
code letters NG
up to trans. no. 16 07 0 38.29
trans 090 code letters
NH, NK 38.36
— 1st/reverse brake piston 38.10
— 2nd gear brake band 38.12
— 2nd gear brake band piston 38.10
disassembling/assembling 38.24

Note

Final drive/transmission oil seal is installed in final drive, but sealing lip fits shoulder on governor drive gear in transmission.

If only oil seal is to be replaced, transmission should not be tilted when removing from final drive to avoid oil leakage and mixing

CAUTION

When final drive or transmission are repaired, check transmission/final drive end play (see page 38.4)

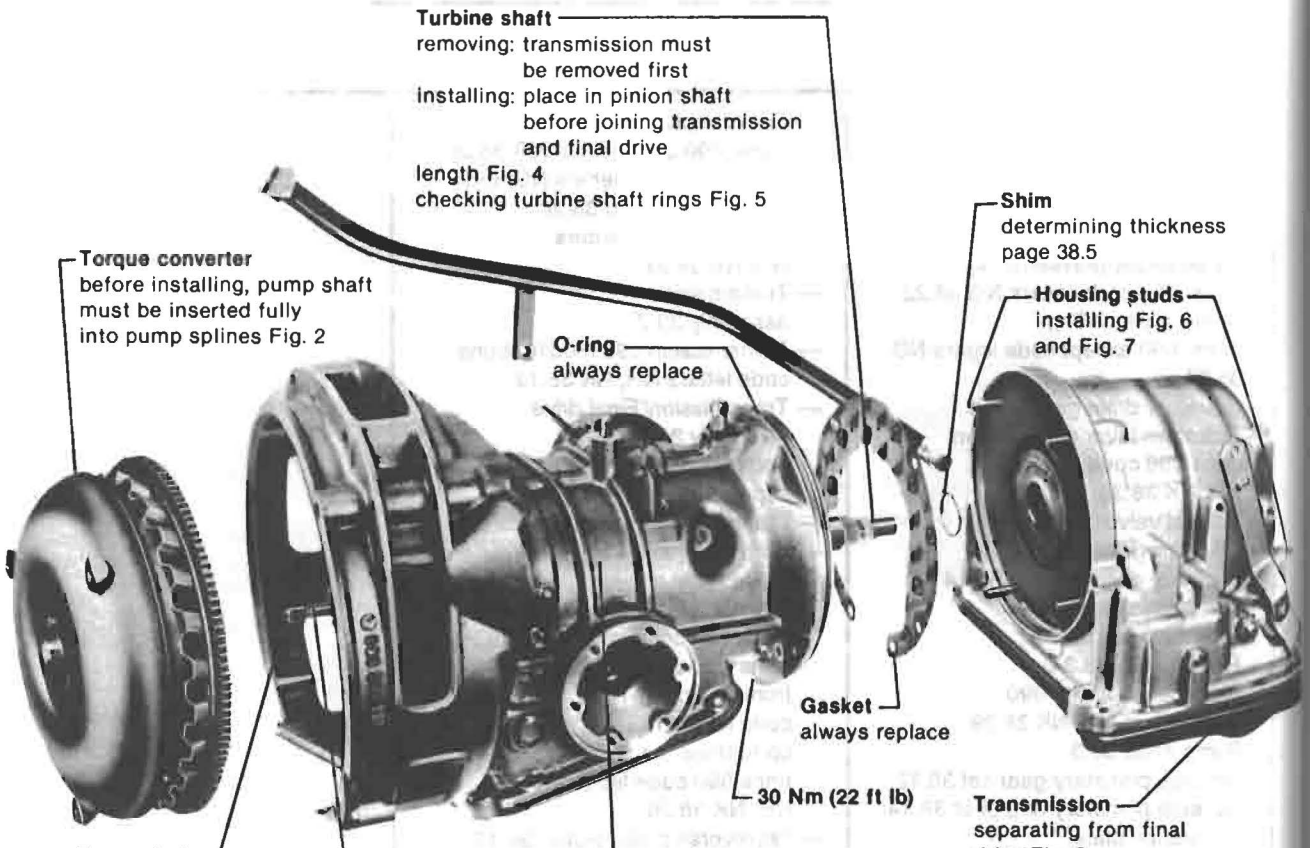

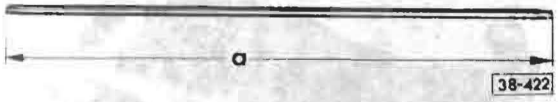

Fig. 1 Pump shaft length
- **a** = 546.7 mm (21.524 in.)

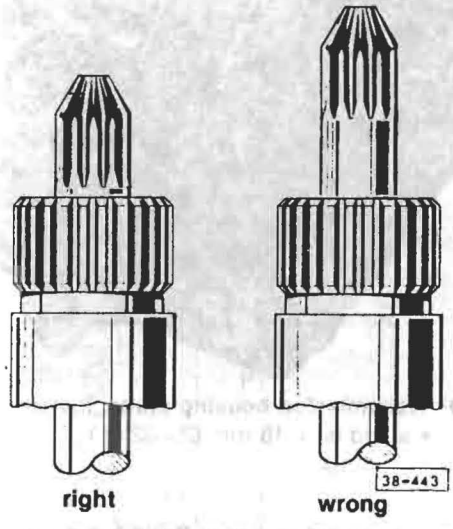

Fig. 2 Pump shaft, inserting

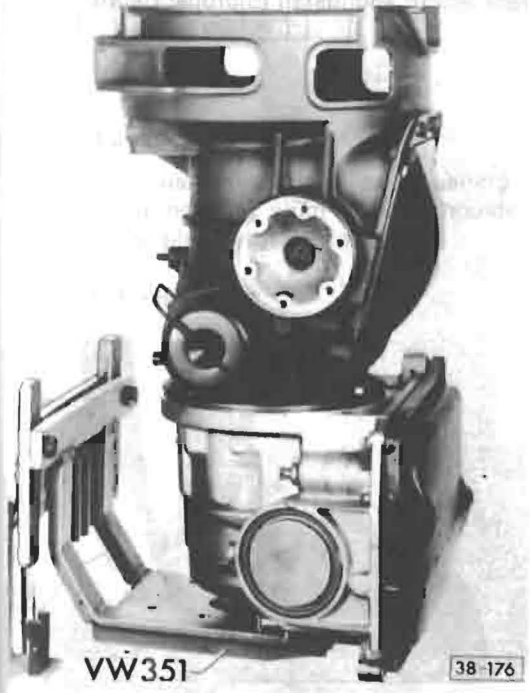

Fig. 3 Transmission/Final drive, separating

— mount transmission/final drive assembly as shown
— drain ATF
— remove final drive
— drain oil from final drive

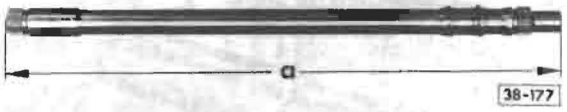

Fig. 4 Turbine shaft, length
- **a** = 457.8 mm (18.024 in.)



Fig. 5 Turbine shaft rings, checking

— check rings (arrows) for wear and proper seating

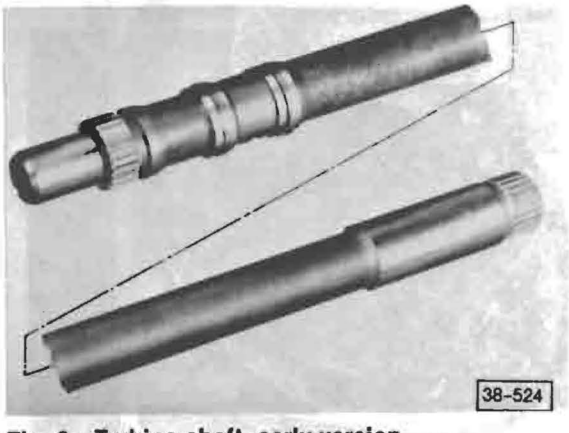

Fig. 6 Turbine shaft, early version
- turbine shaft for forward clutch with thrust **washer**

Note

Do not install together with thrust bearing

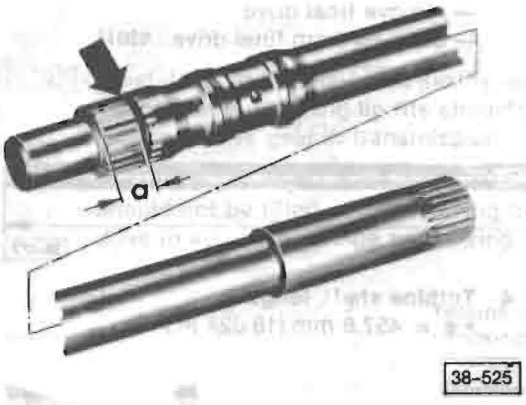

Fig. 7 Turbine shaft, later version

- turbine shaft for forward clutch with thrust bearing
- identification: groove for circlip on splines (arrow)

CAUTION

Never install shaft without circlip

Note

New shaft with circlip can be installed together with early version oil pump and thrust washer

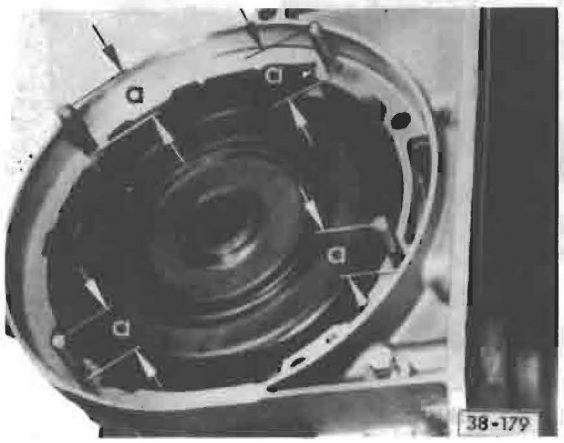

Fig. 8 Transmission housing studs, installing
- **a** = 31.5 mm (1 1/4 in.)

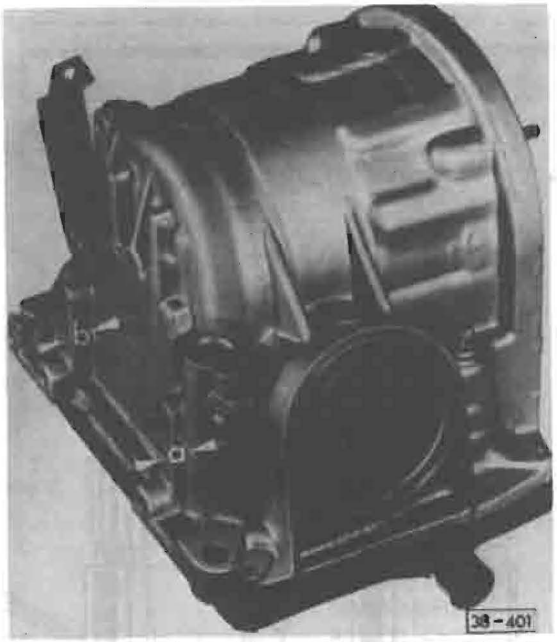

Fig. 9 Transmission housing studs, installing
- **a** and **b** = 18 mm (23/32 in.)

Note

Housings supplied as Spare Parts are without studs. When installing studs, use studs of correct length and install to proper depth

Transmission/Final drive end play, adjusting

Note

End play **y** between transmission and final drive must be adjusted to limit end play of reverse planetary ring gear

Work sequence

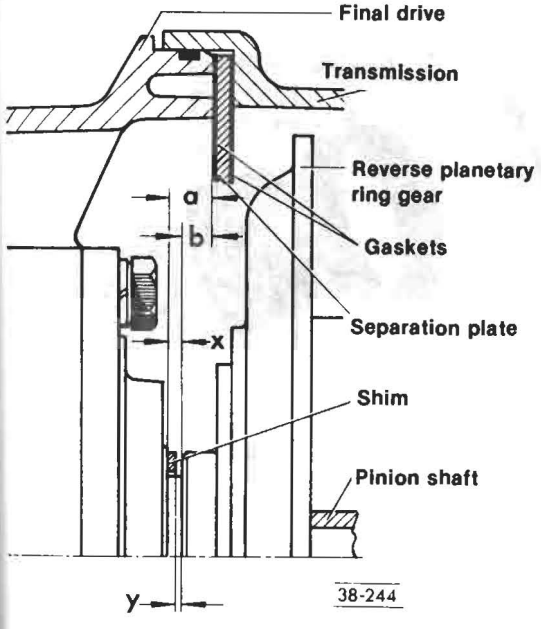

Measuring points:

- Final drive housing: joint to oil seal bushing **a**
- Transmission housing: shim contact shoulder to separation plate with gasket **b**

Dimension a, measuring



– measure dimension from straightedge to oil seal bushing

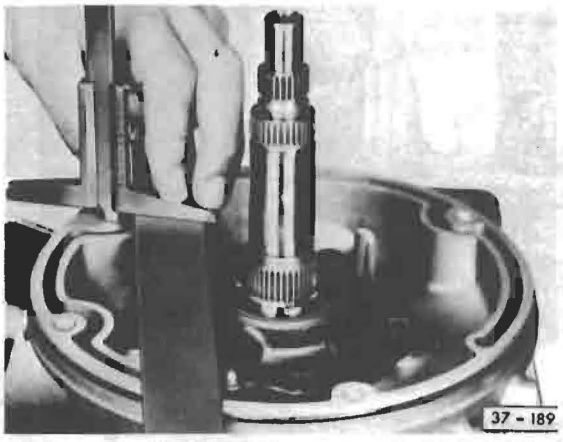

— measure dimension from straight edge to final drive housing joint

Example

from straight edge to oil seal bushing	18.7 mm
from straight edge to joint	– 8.0 mm
Dimension **a**	= **10.7 mm**

Dimension b, measuring

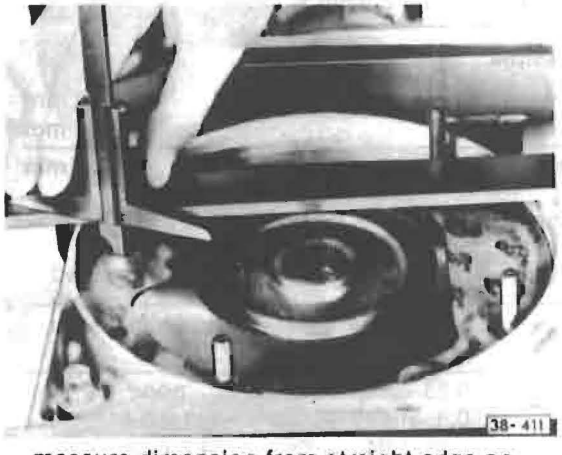

— measure dimension from straight edge on housing to gasket on plate

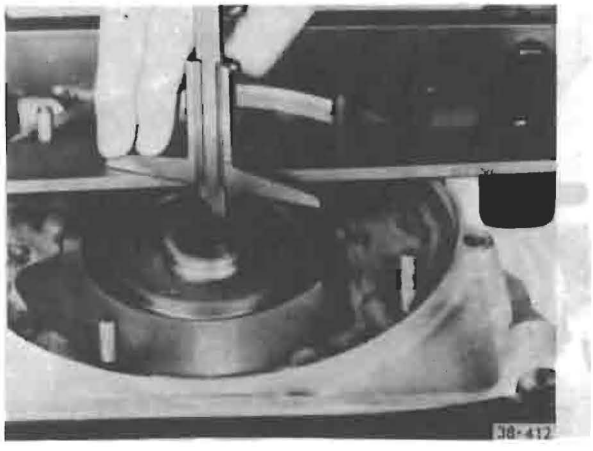

— measure dimension from straight edge to shoulder for shims

Example

from straight edge to plate	19.2 mm
from straight edge to shoulder	– 10.0 mm
Dimension **b**	= **9.2 mm**

Shim thickness, determining

— deduct **b** from **a**
- result is dimension **x**

Example

Dimension **a**	10.7 mm
Dimension **b**	– 9.2 mm
Dimension **x**	= **1.5 mm**

— select shims from table (shims are available in two thicknesses, 0.4 mm and 1.2 mm)

Dimension x mm	Shim mm
0.23–0.84	none
0.85–1.24	1 × 0.4
1.25–1.64	2 × 0.4
1.65–2.04	1 × 1.2
2.05–2.44	1 × 0.4
	1 × 1.2
2.45–2.84	2 × 0.4
	1 × 1.2
2.85–3.24	2 × 1.2
3.25–3.64	1 × 0.4
	2 × 1.2
3.65–3.88	2 × 0.4
	2 × 1.2

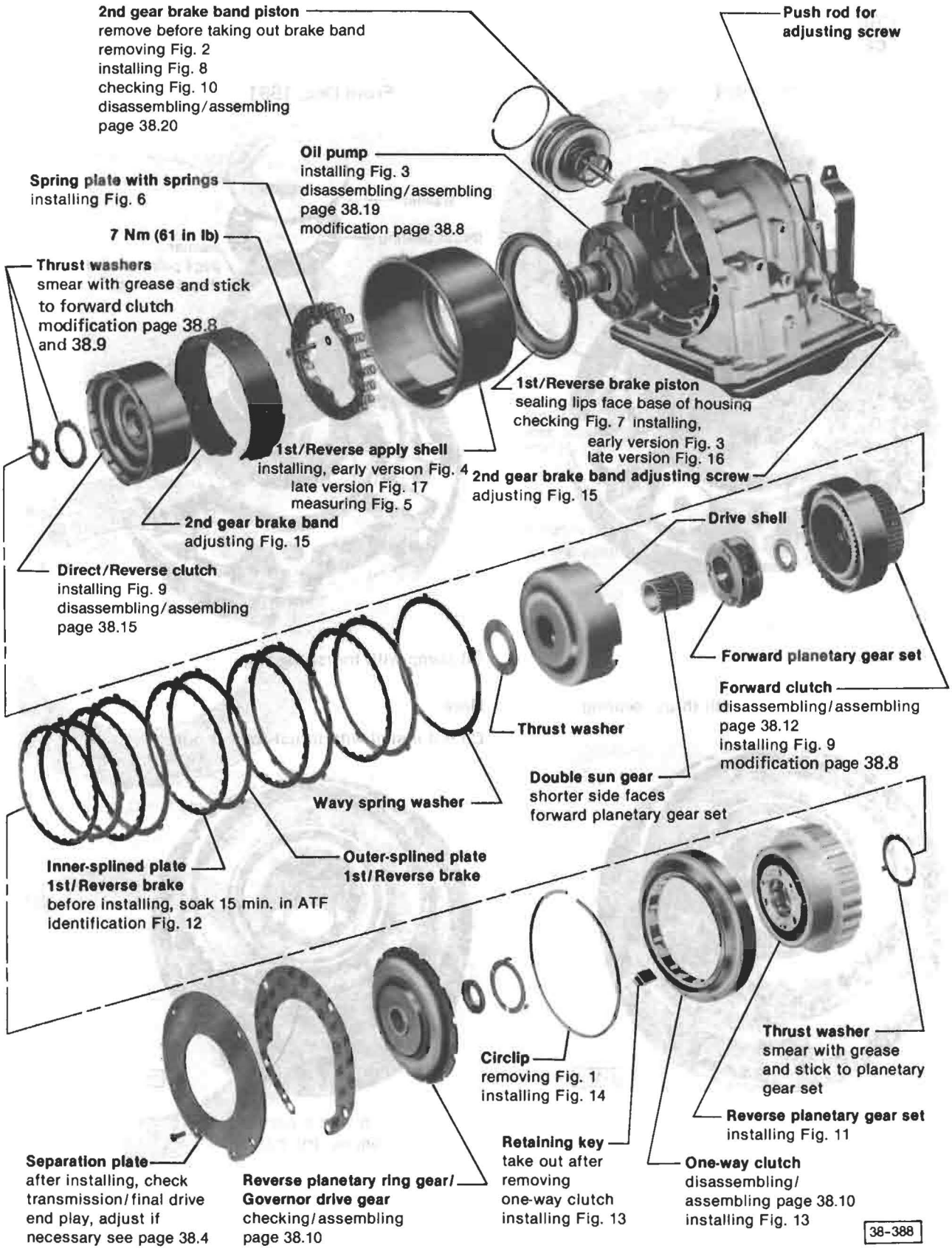
2nd gear brake band piston
remove before taking out brake band
removing Fig. 2
installing Fig. 8
checking Fig. 10
disassembling/assembling
page 38.20
Push rod for
adjusting screw
Oil pump
installing Fig. 3
disassembling/assembling
page 38.19
modification page 38.8
Spring plate with springs
installing Fig. 6
7 Nm (61 in lb)
Thrust washers
smear with grease and stick
to forward clutch
modification page 38.8
and 38.9
1st/Reverse brake piston
sealing lips face base of housing
checking Fig. 7 installing,
early version Fig. 3
late version Fig. 16
1st/Reverse apply shell
installing, early version Fig. 4
late version Fig. 17
measuring Fig. 5
2nd gear brake band adjusting screw
adjusting Fig. 15
2nd gear brake band
adjusting Fig. 15
Drive shell
Direct/Reverse clutch
installing Fig. 9
disassembling/assembling
page 38.15
Forward planetary gear set
Forward clutch
disassembling/assembling
page 38.12
installing Fig. 9
modification page 38.8
Thrust washer
Double sun gear
shorter side faces
forward planetary gear set
Wavy spring washer
Outer-splined plate
1st/Reverse brake
Inner-splined plate
1st/Reverse brake
before installing, soak 15 min. in ATF
identification Fig. 12
Thrust washer
smear with grease
and stick to planetary
gear set
Circlip
removing Fig. 1
installing Fig. 14
Reverse planetary gear set
installing Fig. 11
Retaining key
take out after
removing
one-way clutch
installing Fig. 13
One-way clutch
disassembling/
assembling page 38.10
installing Fig. 13
Separation plate
after installing, check
transmission/final drive
end play, adjust if
necessary see page 38.4
Reverse planetary ring gear/
Governor drive gear
checking/assembling
page 38.10
38-388

Oil pump and forward clutch, modifications

Up to Dec. 1981

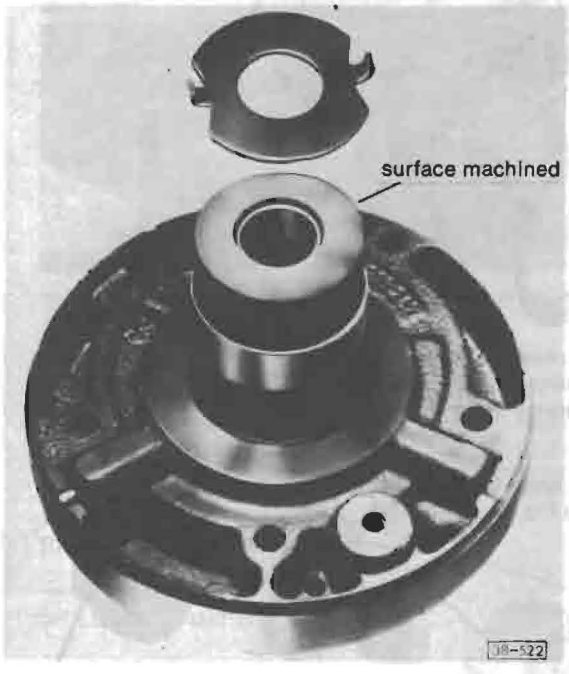

Oil pump with thrust washer

Note

Can be installed together with thrust bearing

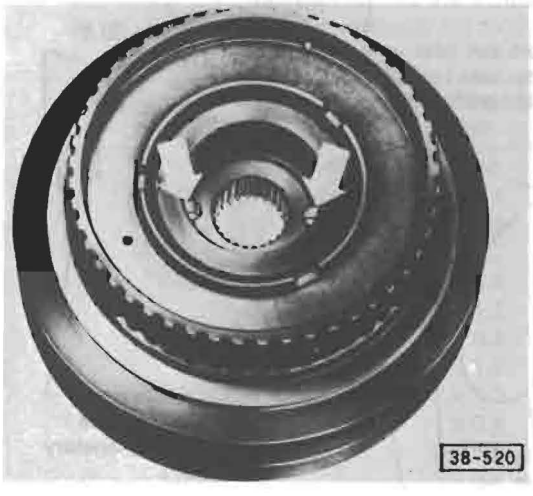

Forward clutch with thrust washer
- identification: drillings (arrows)

Note

Do not install together with thrust bearing

From Dec. 1981

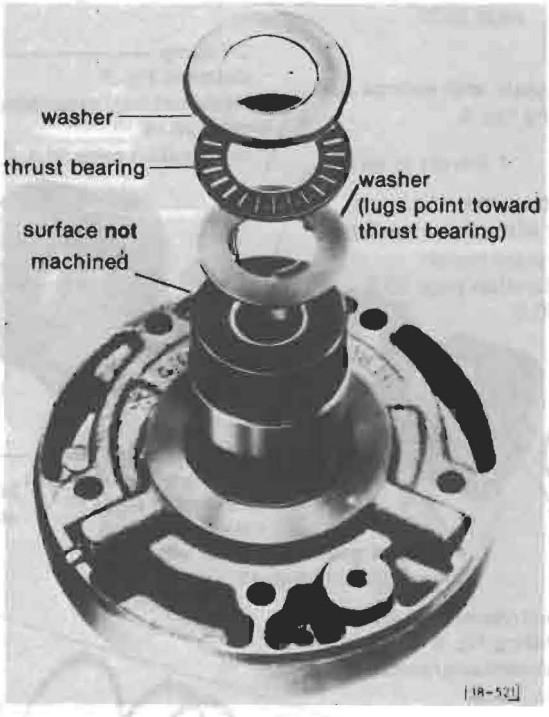

Oil pump with thrust bearing

Note

Do not install with thrust washer only

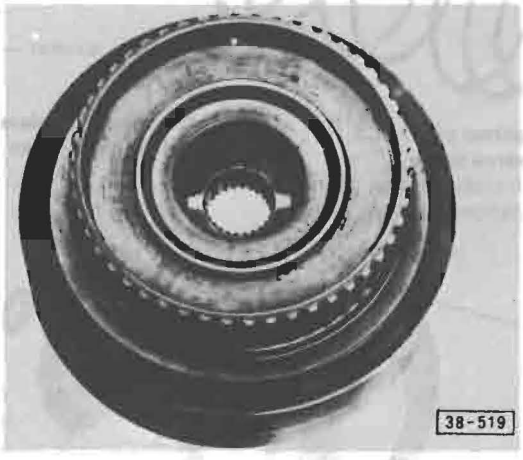

Forward clutch with thrust bearing
- identification: no drillings

Note

Do not install together with thrust washer

Thrust washers

Up to Dec. 1981

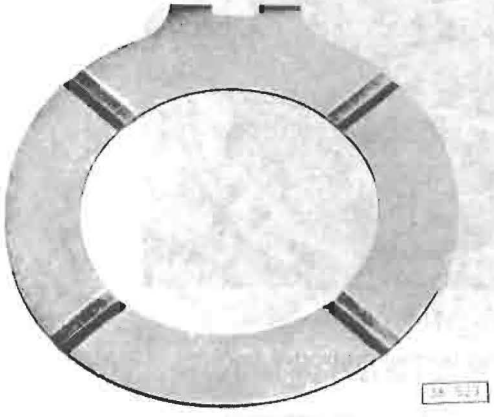

between oil pump and D + R clutch
(steel/bronze)

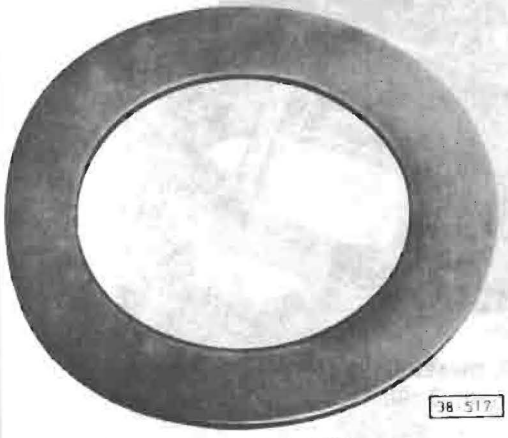

between oil pump and D + R clutch
(plastic)

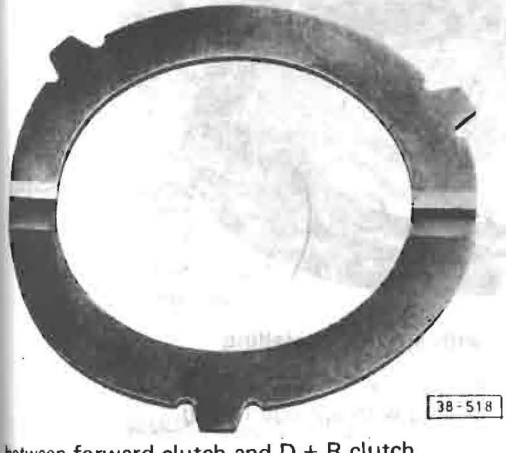

between forward clutch and D + R clutch

From Dec. 1981

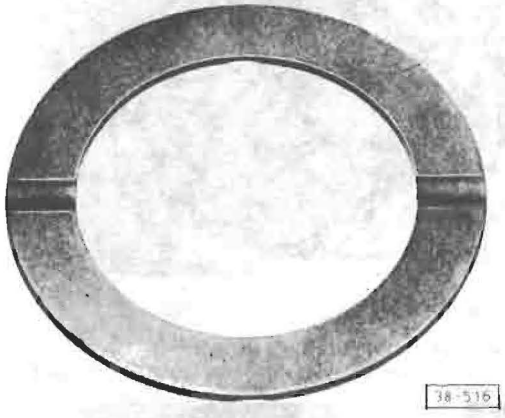

between oil pump and D + R clutch, also between forward clutch and D + R clutch
(plastic)

Note
New thrust washers can also be installed in previcus transmissions

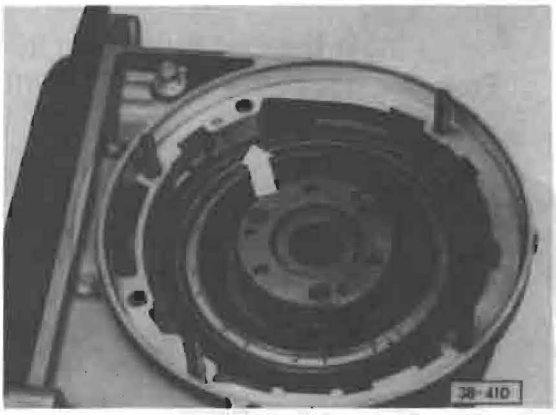

Fig. 1 Circlip, removing

— remove from groove (arrow)

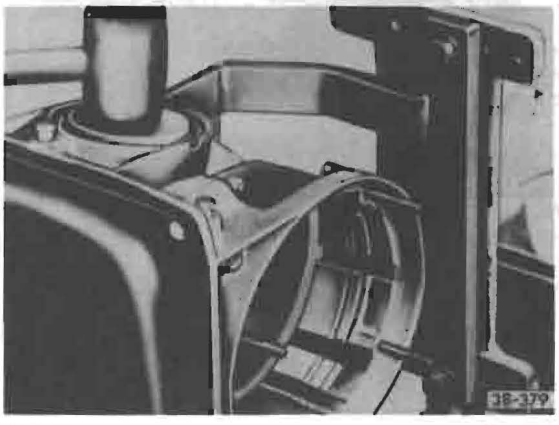

Fig. 2 2nd gear brake band piston, removing

— remove circlip
— remove piston by tapping lightly with rubber hammer

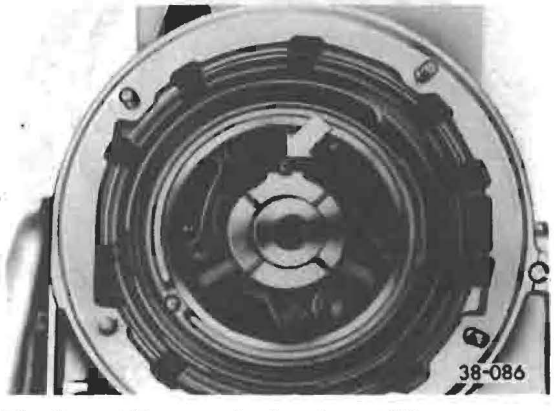

Fig. 3 1st/Reverse brake piston/Oil pump, installing

— push piston onto pump housing and insert pump in housing. Thin rib (arrow) must point up
— insert pump shaft in drive plate and turn pump. Pump should turn freely

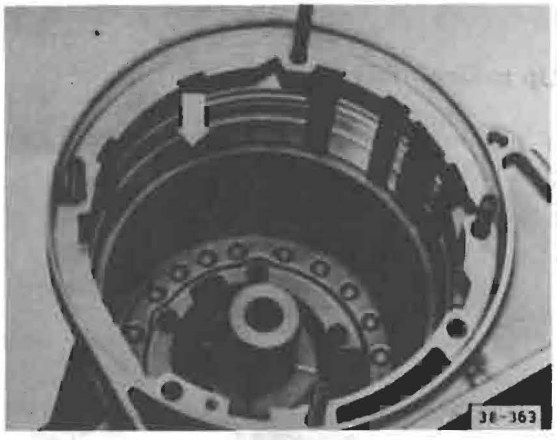

Fig. 4 Apply shell, installing

— insert lug (arrow) in groove shown

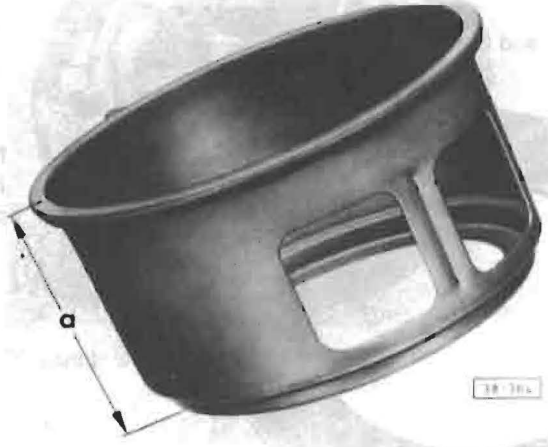

Fig. 5 Apply shell, measuring

• **a** = 91.4 mm (3.598 in.)

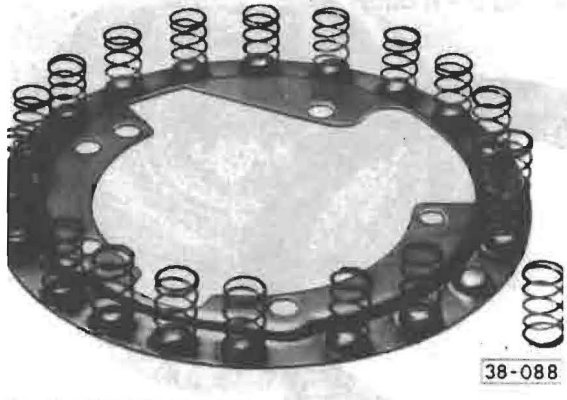

Fig. 6 Spring plate with springs, installing

— place springs on plate
— place in housing with springs facing down and tighten in this position

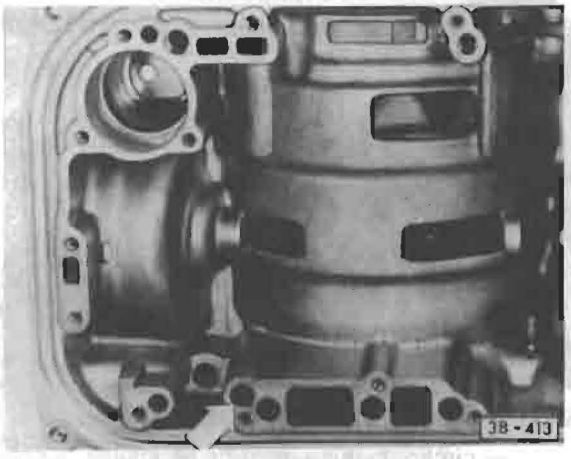

Fig. 7 1st/Reverse gear brake, checking

— apply low air pressure to port (arrow)
- piston must compress springs
- piston must return to original position, when compressed air is released

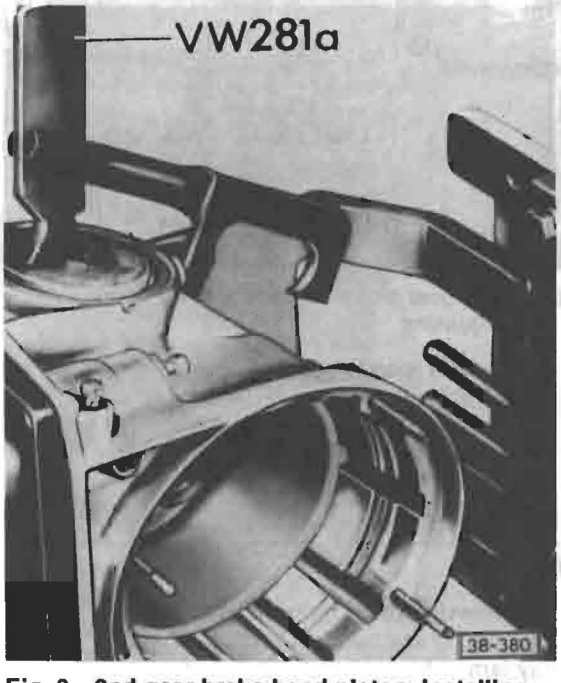

Fig. 8 2nd gear brake band piston, installing

— press piston down and insert circlip

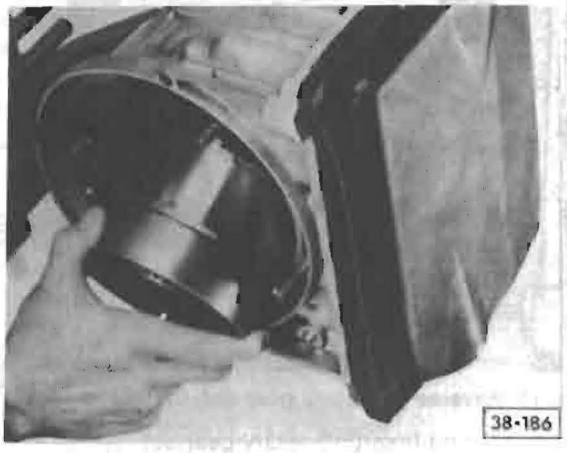

Fig. 9 Direct/Reverse and Forward clutches, installing

— assemble direct/reverse and forward clutches first
— angle transmission housing downward and slide clutches onto neck of oil pump
— turn transmission so opening faces up

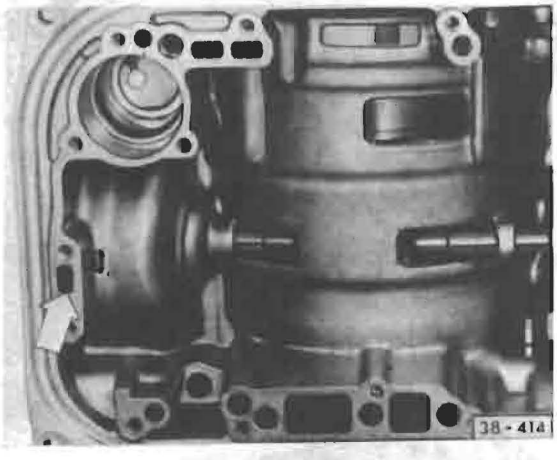

Fig. 10 2nd gear brake, checking

— apply low air pressure to port (arrow)
- brake band must apply
- brake band must release when air pressure removed

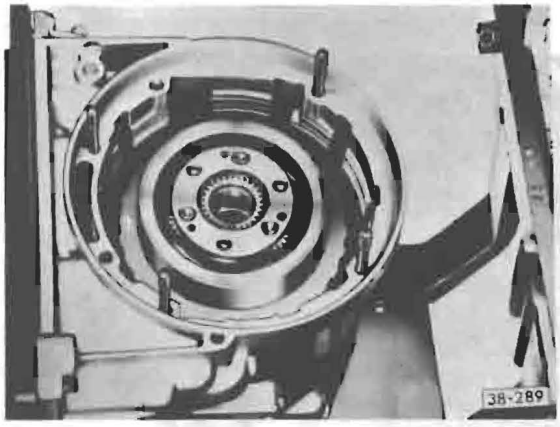

Fig. 11 Reverse planetary gear set, installing

— first insert planetary gear set
— insert wavy spring washer and plates

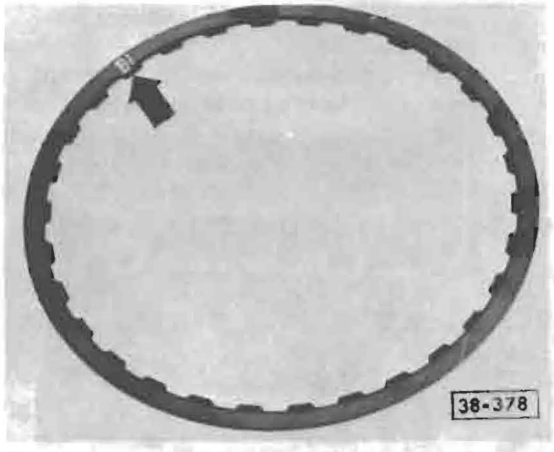

Fig. 12 1st gear brake splined plates, identification

- plates are marked **B1** (arrow)

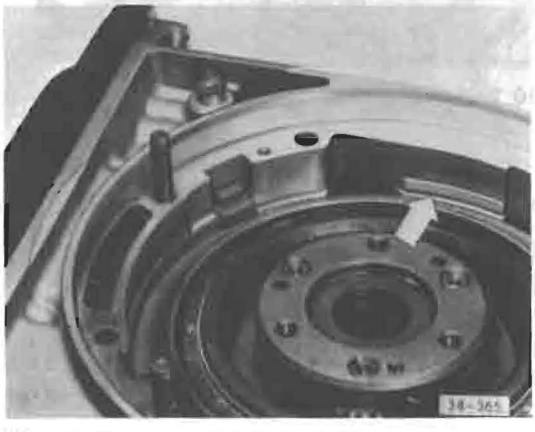

Fig. 13 One-way clutch, installing

- parts are installed properly if groove for circlip is exposed (arrow)
- it must **not** be possible to turn planetary gear set counterclockwise

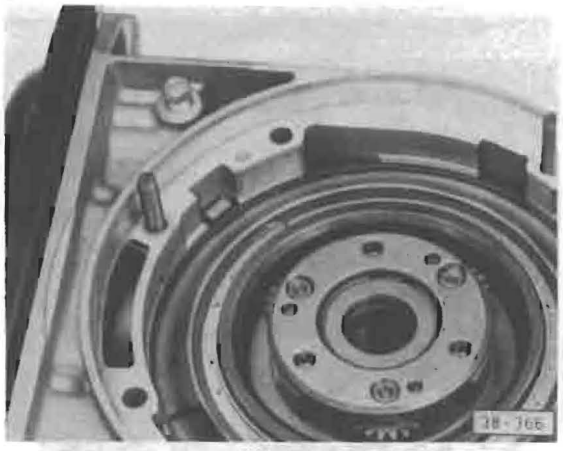

Fig. 14 Circlip, installing

— circlip opening must be opposite retaining key

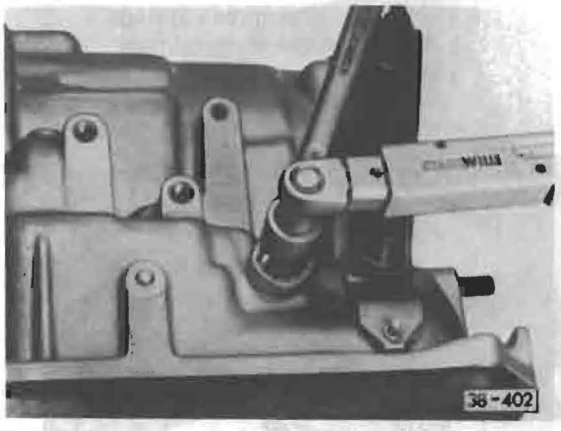

Fig. 15 2nd gear brake band adjusting screw, adjusting

— first loosen locknut and tighten adjusting screw to **10 Nm (87 in. lb)**
— loosen and retighten to **5 Nm (43 in. lb)**
— loosen from this position exactly 2 1/2 turns and tighten locknut

CAUTION

Transmission must be horizontal when adjusting brake bands; otherwise bands may jam

Modifications for transmission 090 — code letters NH, NK

Note

Wavy spring washer for 1st gear brake has been deleted. Apply shell has been lengthened as a result. 1st gear brake piston now has a ball valve.

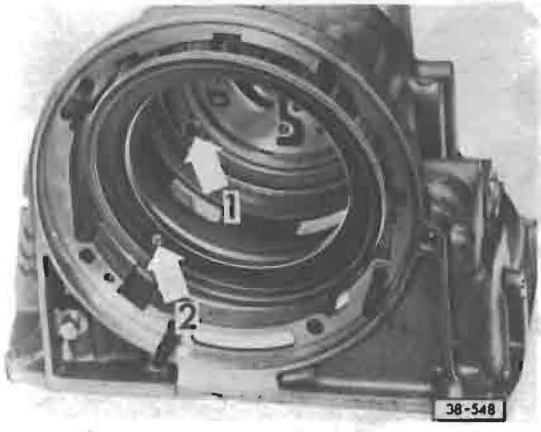

Fig. 16 1st gear brake piston, installing
— lubricate with ATF
- ball valve in piston (arrow 2) must line up with drilling in transmission housing (arrow 1)



Fig. 17 Apply shell, installing
- a = 97 mm
- drilling (arrow) must line up with ball valve on 1st gear brake piston

Note

Number of inner and outer splined plates used with this length apply shell is 4 each.

New piston with ball valve and apply shell with drilling may be installed in previous transmissions with following requirements:
- do **not** use wavy spring washer
- only use 4 inner and 4 outer splined plates

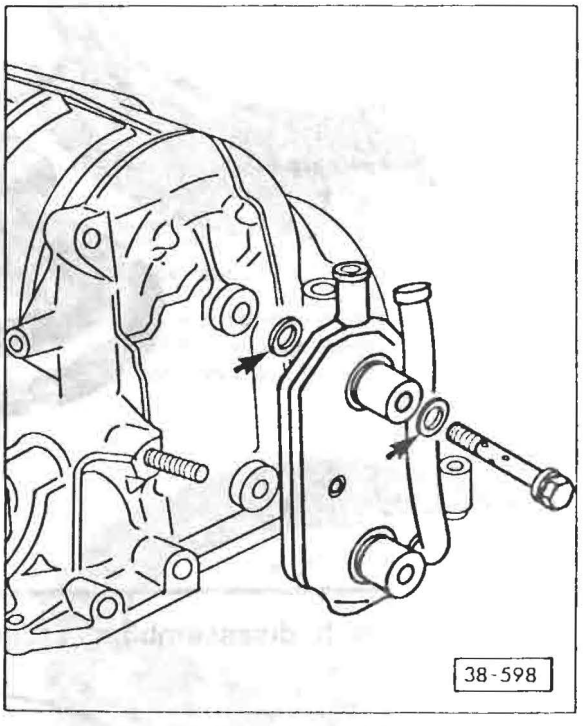

Fig. 18 ATF cooler, installing
- transmission is equipped with ATF cooler secured to transmission with union bolts and sealed with O-rings (arrows).

— tighten union bolts to 40 Nm (30 ft lb)

Reverse planetary ring gear/Governor drive gear, checking/assembling



One-way clutch, disassembling/assembling

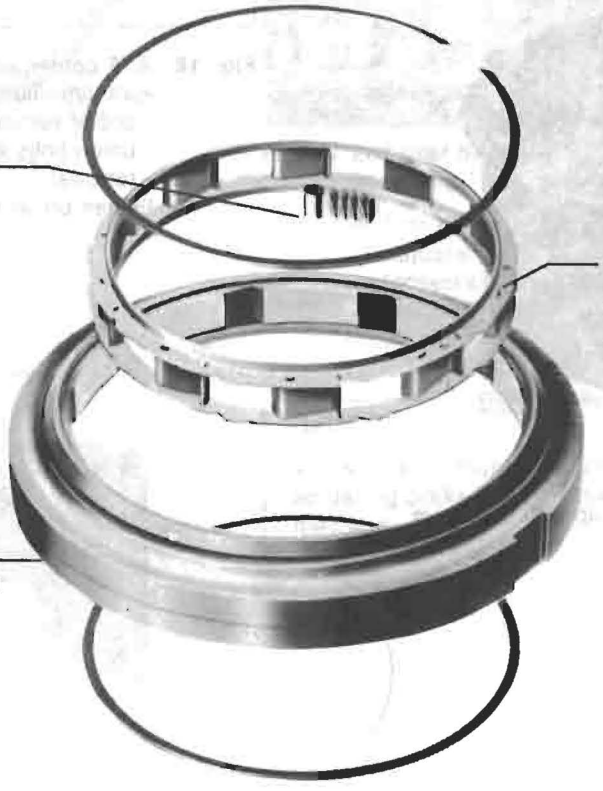

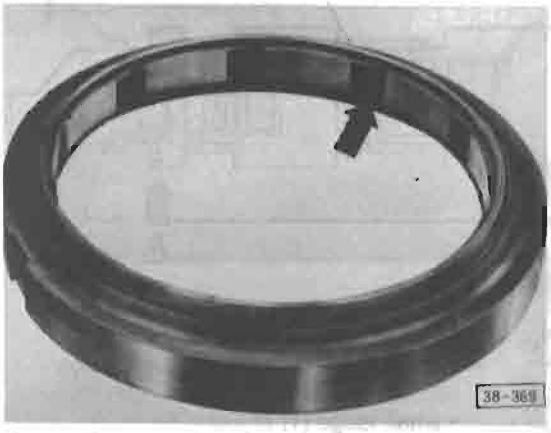

Fig. 1 **One-way clutch outer ring, assembling**

— place lower circlip in ring (arrow)

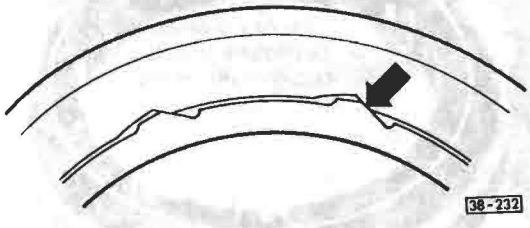

Fig. 2 **One-way clutch cage, assembling**

— heat outer ring to at least 150°C (300°F) on a hot plate. Set hot plate to at least 190°C (375°F)
— grip upper shoulder of cage with two pairs of pliers and place it quickly in outer ring
— short sides of retaining lugs on cage must be firmly against shoulders in outer ring (arrow). If necessary, turn cage slightly immediately after inserting it

CAUTION

If cage is not properly located on lower circlip and inside of outer ring, do not press it into position. Knock cage out carefully, let cool and repeat procedure



Fig. 3 **Spacer springs and rollers, installing**

— rollers/springs must be installed in proper relation to each other (as shown)



When installing spring with guide lug (arrow), always point lug toward roller to ensure best lateral guidance

Note

Both springs can be installed together, with and without lug

One-way clutch with plastic cage for rollers and springs

Note

New plastic cage can be service-installed in earlier transmissions. Circlips previously used have been discontinued and cannot be used with plastic cage.



Fig. 4 Plastic cage segments
— assemble 10 segments to form a ring

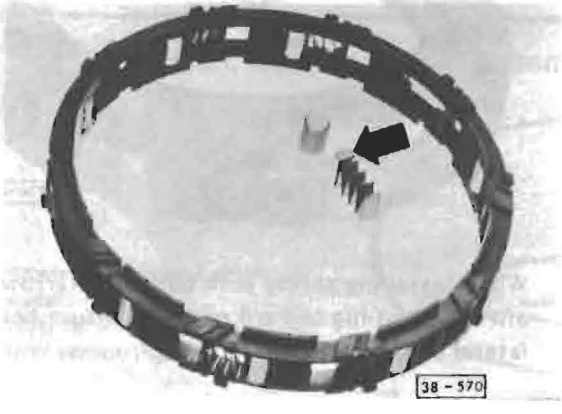

Fig. 5 Springs and rollers, installing
• spring tab (arrow) toward roller

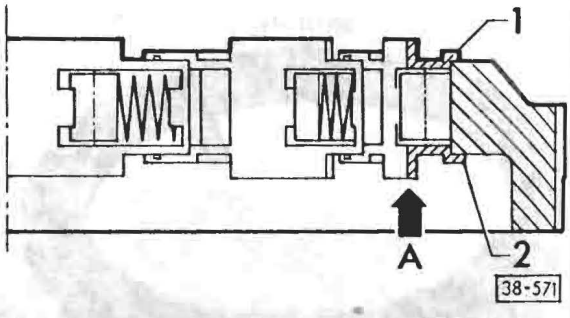

Fig. 6 Installation position of cage
— insert cage into outer ring from below (direction of arrow A)
• small ledge (1) at top
• large ledge (2) at bottom

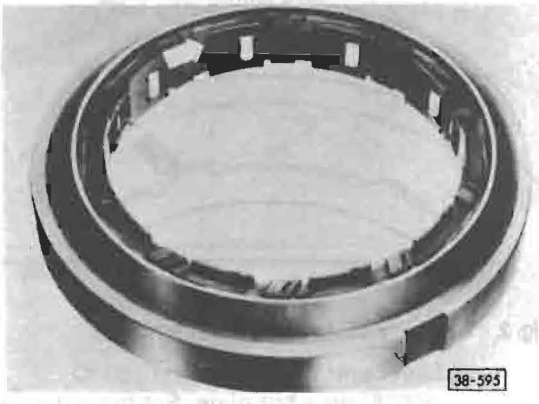

Fig. 7 Securing cage
— turn in direction of arrow

Forward clutch assembly
checking operation Fig. 4

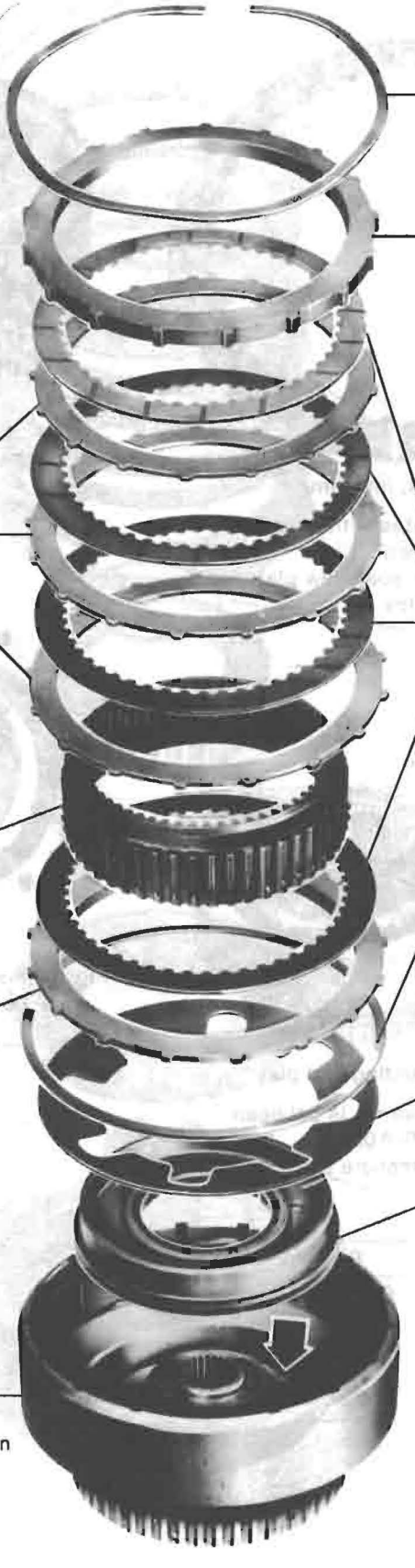

Circlip

Pressure plate
different thicknesses
adjusting end play Fig. 2

Outer splined plates (3)
if radial grooves are found, replace plates. If discolored but no grooves, reuse plates

Inner splined plates (4)
installing Fig. 1

Forward planetary ring gear
before installing, insert thrust plate and one inner splined plate under ridge

Circlip
when installed, diaphragm spring must be lightly tensioned; if not, replace diaphragm spring

Thrust plate

Diaphragm spring
convex side faces bottom of clutch drum

Piston
before installing, dip in ATF

Clutch drum
assembling Fig. 3
checking: blow compressed air in direction of arrow to check that ball valve is free and seals properly.
Check that valve is not obstructed by blowing compressed air in opposite direction of arrow

38-386

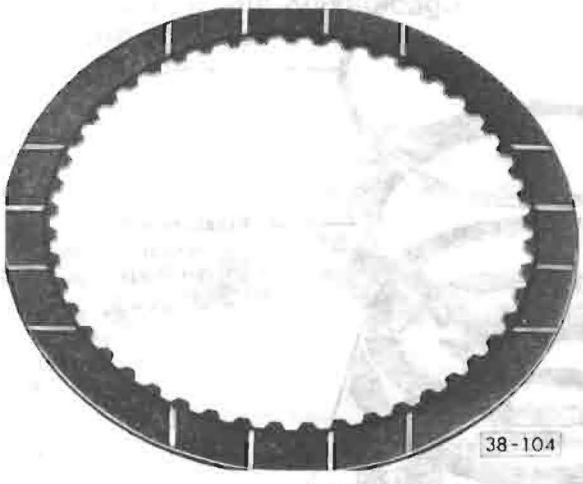

Fig. 1 Inner splined plates, installing

- only install plates with linings marked as shown

— before installing, soak new plates in ATF for 15 minutes

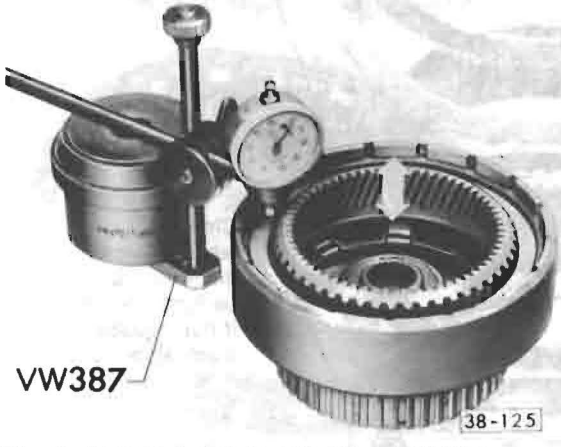

Fig. 2 Forward clutch, adjusting end play

— check that play (arrow) is between 0.5-0.9 mm (0.020-0.035 in.)

if **NO,** select new pressure plate from table

Thickness (mm)	Part No.
6.0	010 323 253 F
6.4	010 323 253 A
6.8	010 323 253 B
7.2	010 323 253 C
7.6	010 323 253 D

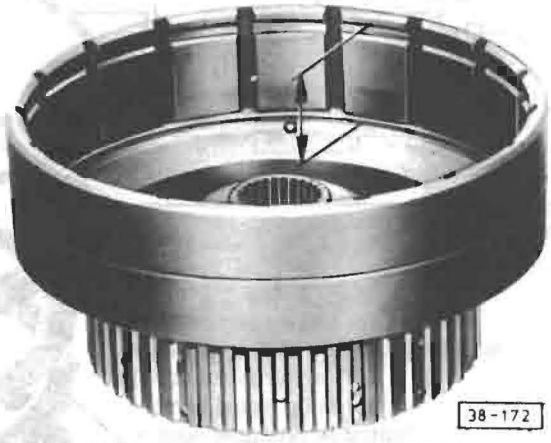

Fig. 3 Forward clutch drum, assembling

— measure depth of grooves

- **a** = 29.8 mm (1.173 in.)

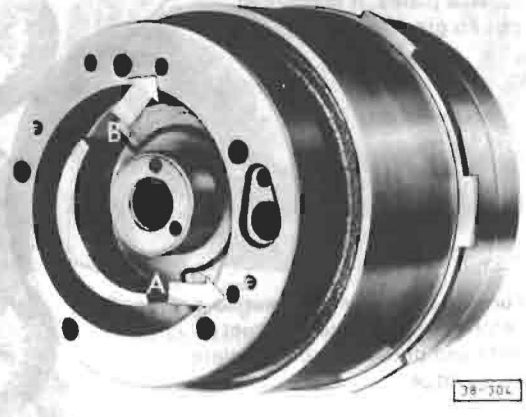

Fig. 4 Forward clutch assembly, checking operation

— install both forward clutch and direct/reverse clutch with thrust washers on oil pump

— apply compressed air to port (arrow **A**)

- piston must compress clutch plates
- piston must release plates when compressed air is removed

Direct/Reverse clutch assembly
checking operation Fig. 8

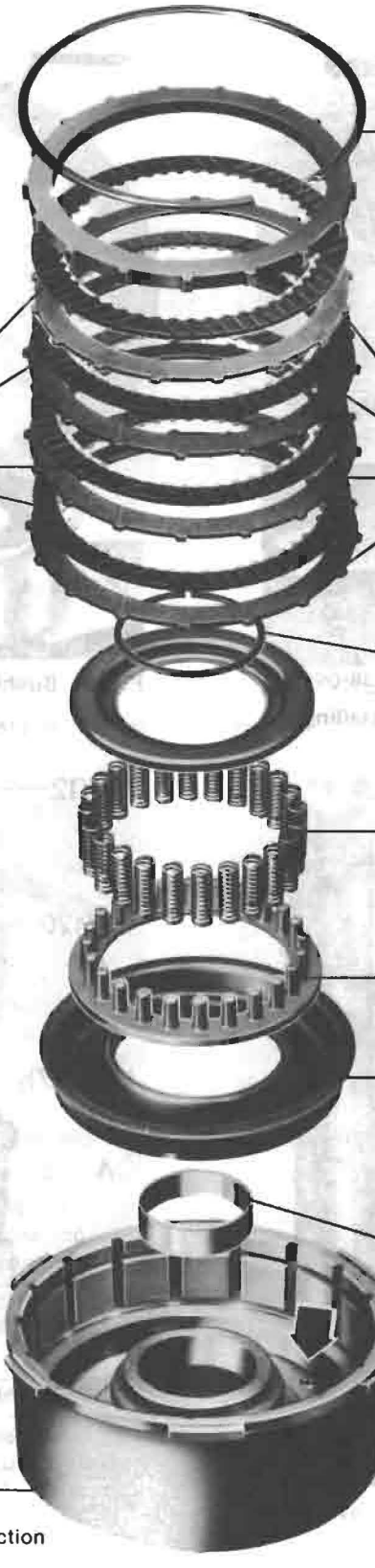

Circlip
different thicknesses
adjusting end play Fig. 6

Inner splined plates (4)
installing Fig. 5

Outer splined plates (4)
if radial grooves are found, replace plates. If discolored but no grooves, reuse plates

Circlip
removing/installing Fig. 1

Springs (24)

Spring plate

Piston
sealing lips are vulcanized to piston
before installing dip in ATF

Bushing
removing Fig. 2
installing Fig. 3 and Fig. 4

Clutch drum
assembling Fig. 7
checking: apply compressed air in direction of arrow to check that ball valve is free and seals properly.
Check that valve is not obstructed by applying compressed air in opposite direction of arrow

38-389

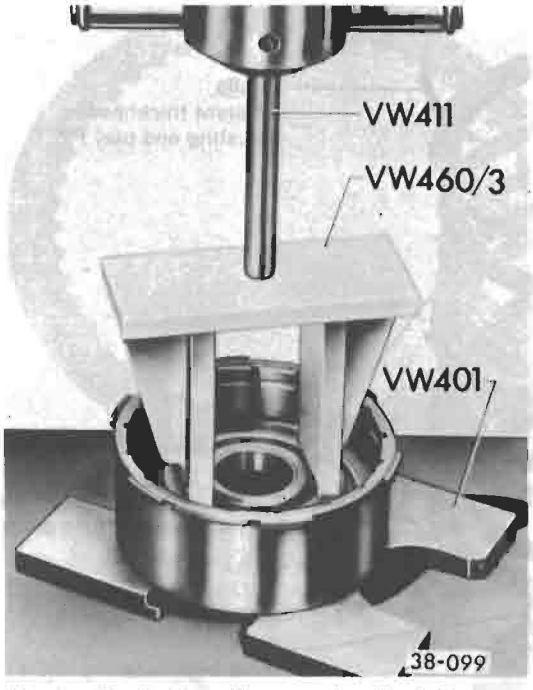

Fig. 1 Circlip (small), removing/installing

— press spring plate down

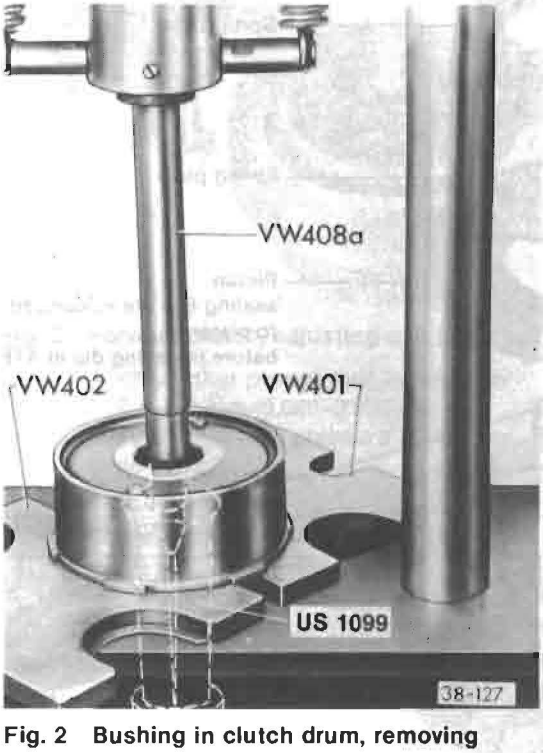

Fig. 2 Bushing in clutch drum, removing

— press out

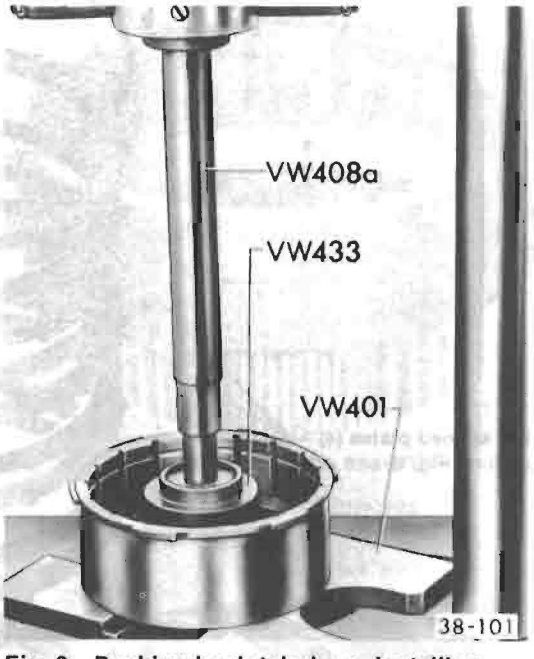

Fig. 3 Bushing in clutch drum, installing

— press bushing in flush

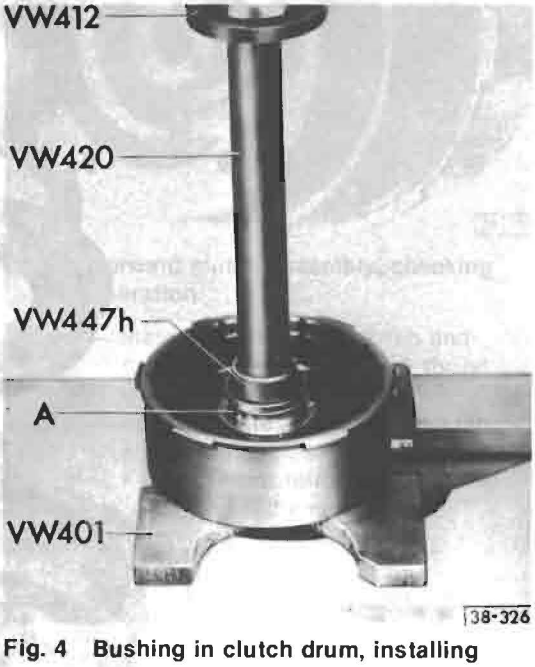

Fig. 4 Bushing in clutch drum, installing

— use old bushing **A** to press new bushing 1.7 mm (0.067 in.) below top edge

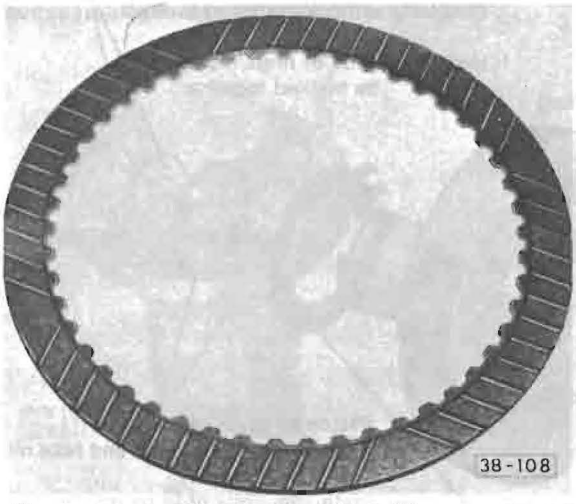

Fig. 5 Inner splined plates, installing

- only use plates with lining marked as shown

— soak new plates in ATF for 15 minutes before installing

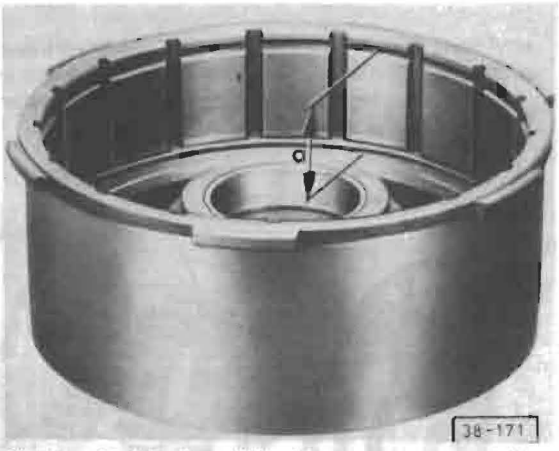

Fig. 7 Clutch drum/Circlip groove, assembling

Note

Different size clutch drums are available. Only install drum with correct dimension

- **a** = 31.25 mm (1.230 in.)

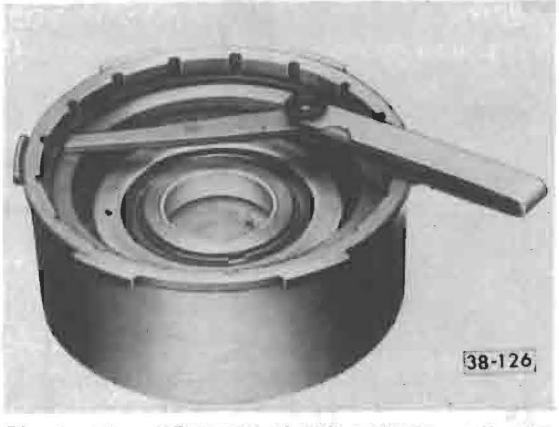

Fig. 6 Direct/Reverse clutch end play, adjusting

— check that play is 2.05–2.50 mm (0.081–0.098 in.)

— adjust if necessary by replacing circlip until correct clearance is obtained

Circlip available

Thickness (mm)	Part No.
1.5	010 323 157 A
1.7	010 323 157 B
2.0	010 323 157
2.3	010 323 157 C
2.5	010 323 157 D

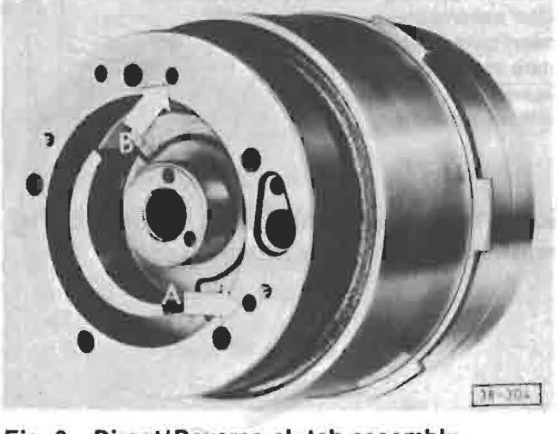

Fig. 8 Direct/Reverse clutch assembly, checking operation

— install both forward clutch and direct/reverse clutch with thrust washers on oil pump

— apply compressed air to port (arrow **B**)

- piston must compress clutch plates
- piston must release plates when compressed air is removed

Oil pump, disassembling/assembling

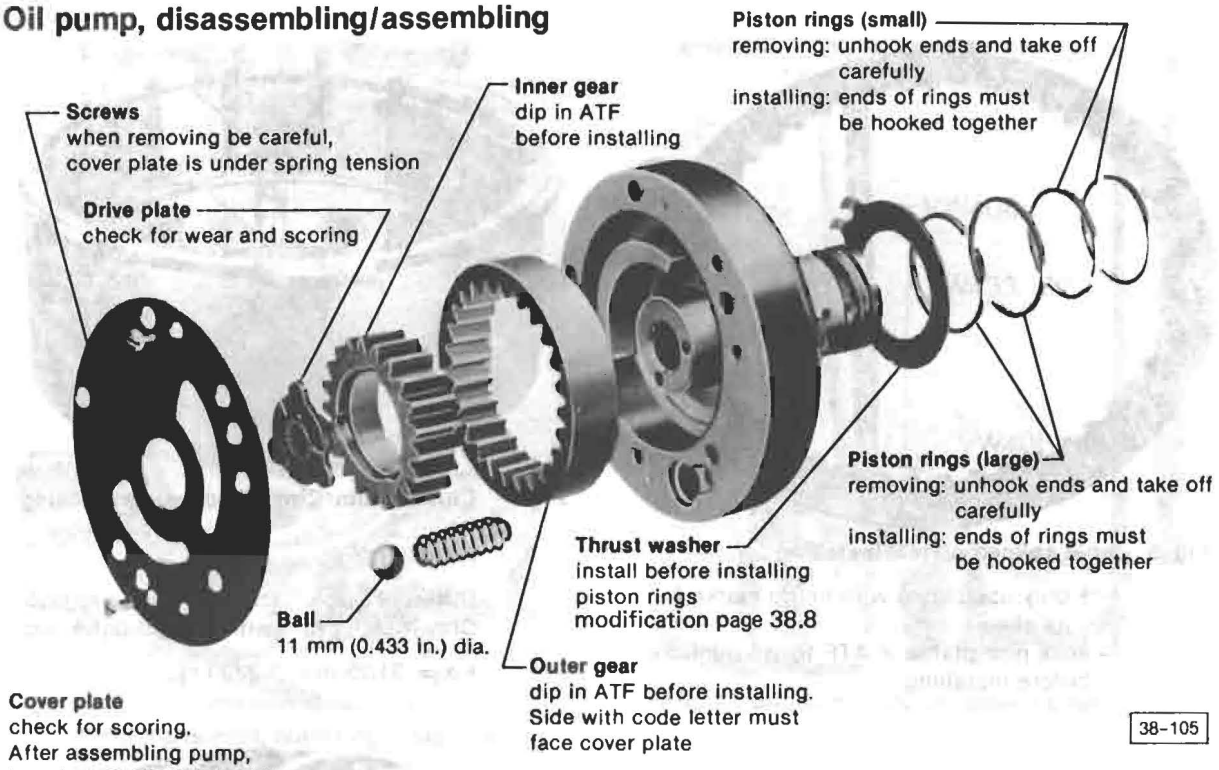

Governor, disassembling/assembling

(transmission 090—code letters NG only)

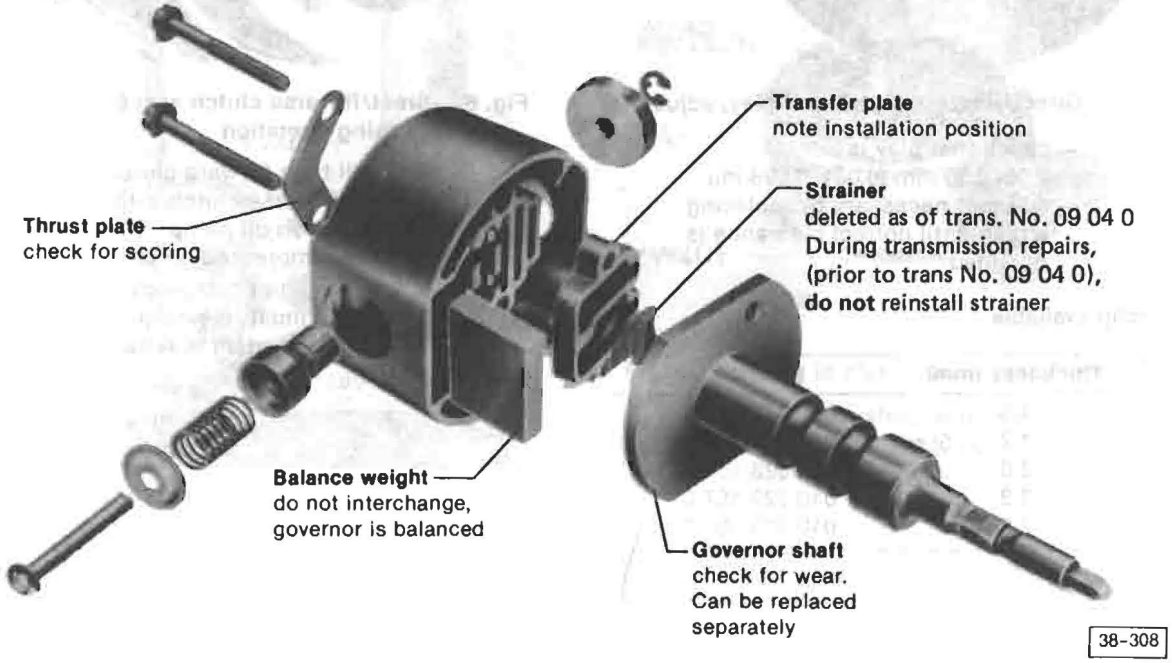

Governor, removing/installing
(Transmission 090—except code letters NG)

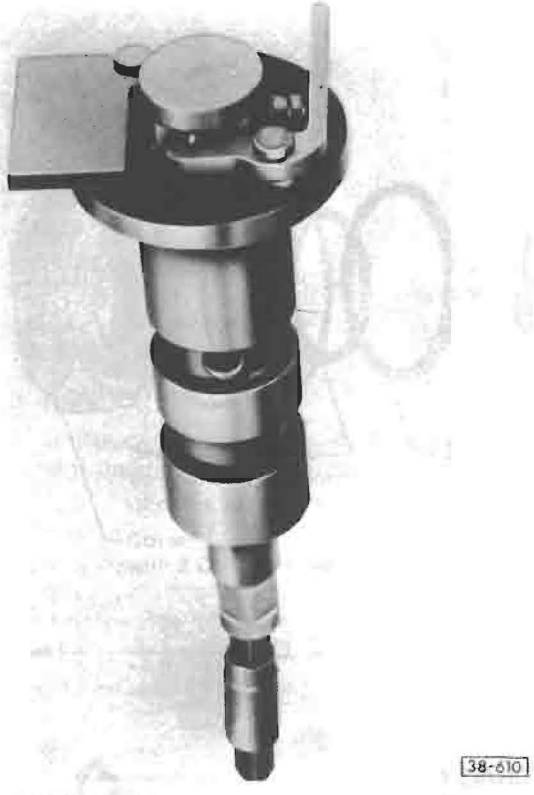

Flat Governor

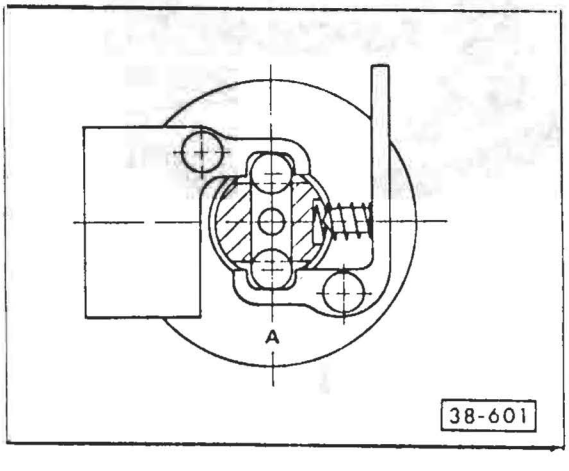

Governor, identification

Code letters (listed below) are stamped on governor head. New type governors are used only with new type valve bodies (see pages 38.37, 38.38).

Transmission Code Letters	Valve body Code Letters	Governor Code letters
NH	FF	A
NH	FFA	A
NK	FFA	A

Note

New governor may only be used with new type valve body. Previous type governor may also be used with new valve body.

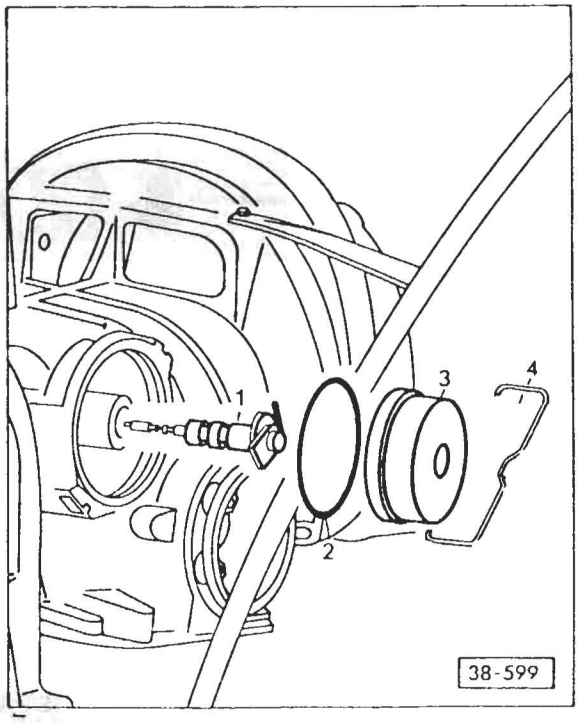

Governor, removing/installing

1 — Flat governor
2 — O-ring
• always replace
3 — Governor cap
4 — Clip
• must be secure

2nd gear brake band piston, disassembling/assembling

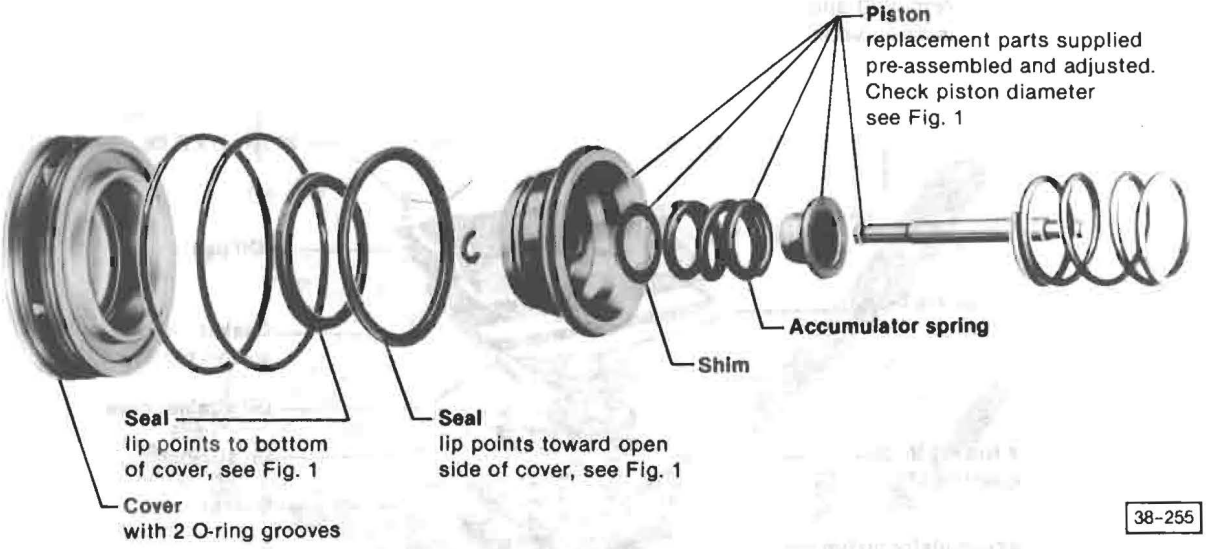

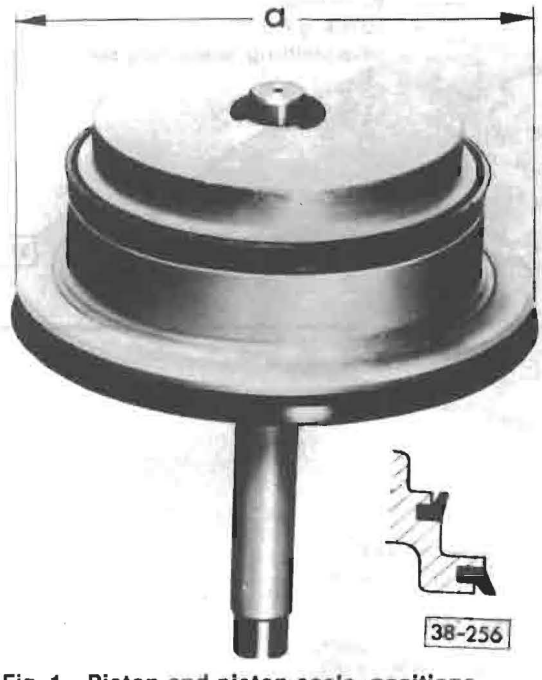

Fig. 1 Piston and piston seals, positions

- **a** = 96.5 mm (3.799 in.)

Valve body, removing/installing

CAUTION
Do not run engine or tow vehicle when oil pan is off or with no oil in transmission

Note

Valve body can be removed and installed with automatic transmission in vehicle. Drain ATF and remove oil pan first

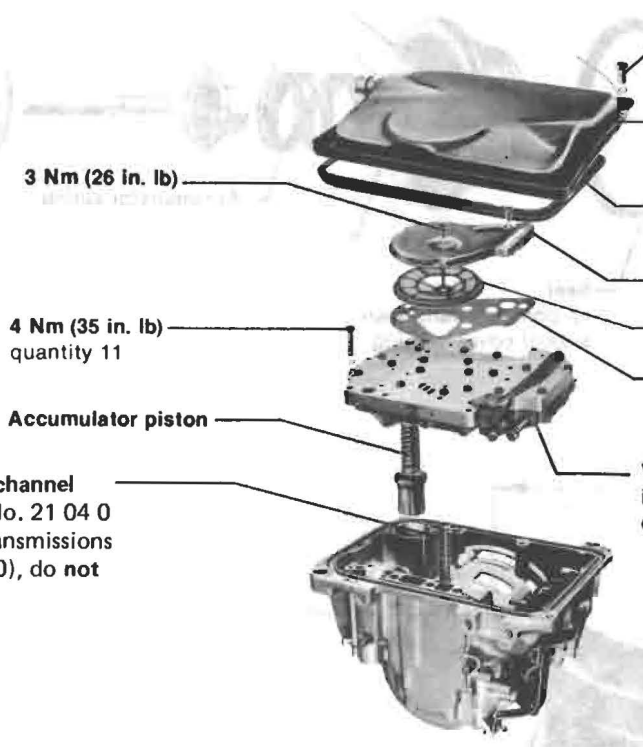

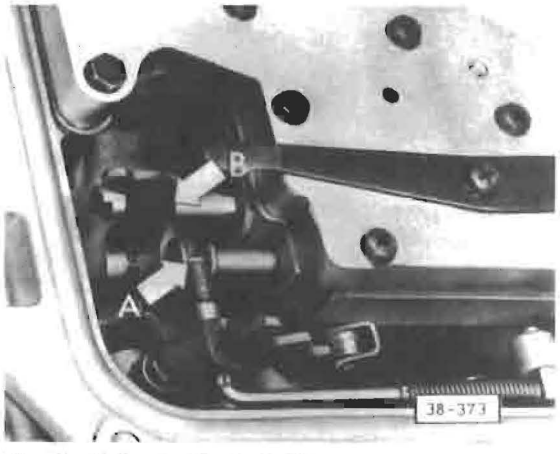

Fig. 1 Valve body, installing

— attach valve body to housing
— connect manual valve (arrow **A**) and operating lever (arrow **B**)
— tighten all bolts diagonally

CAUTION

Tighten screws evenly in diagonal sequence

Transmission 090
(code letters NG only)

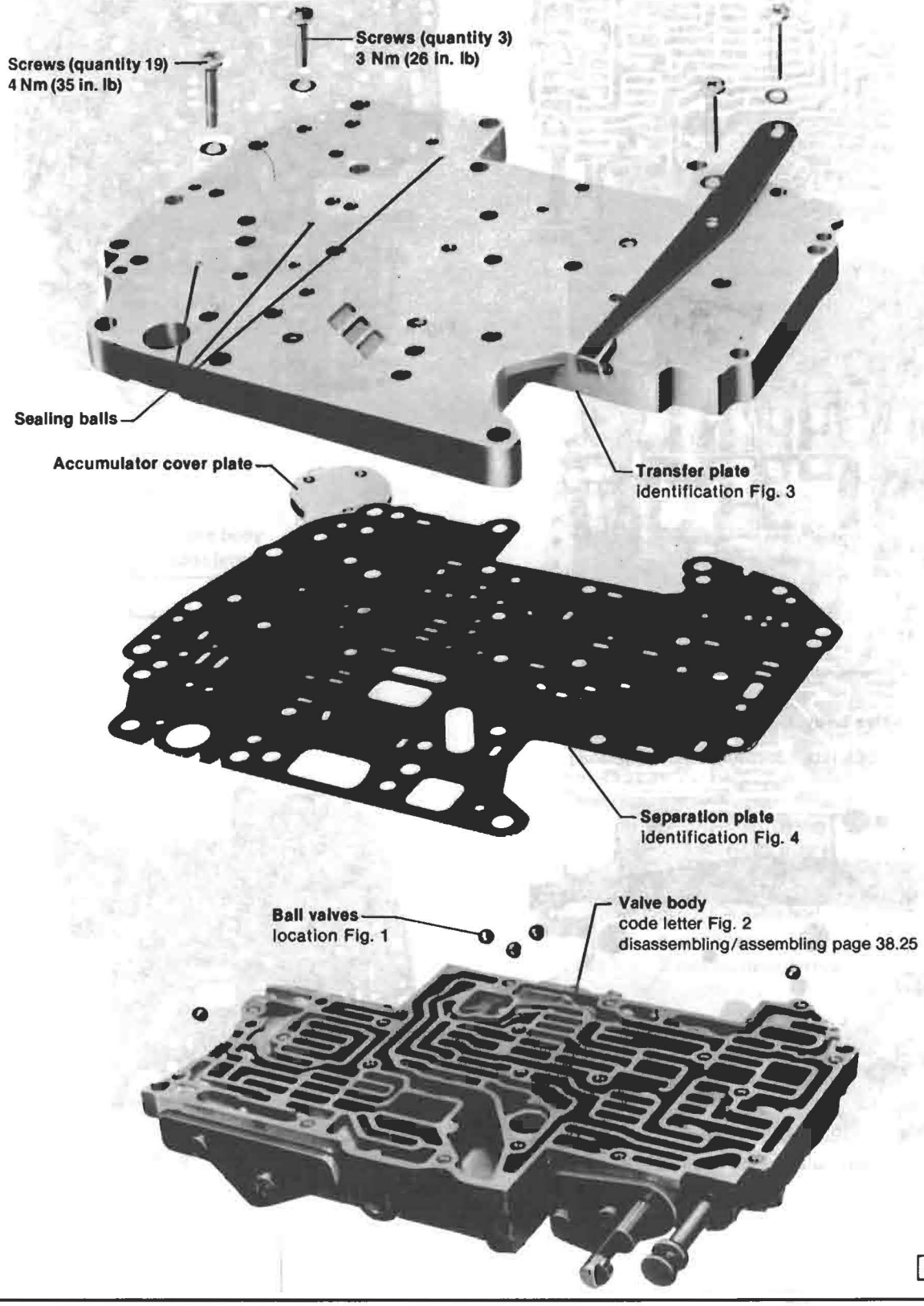

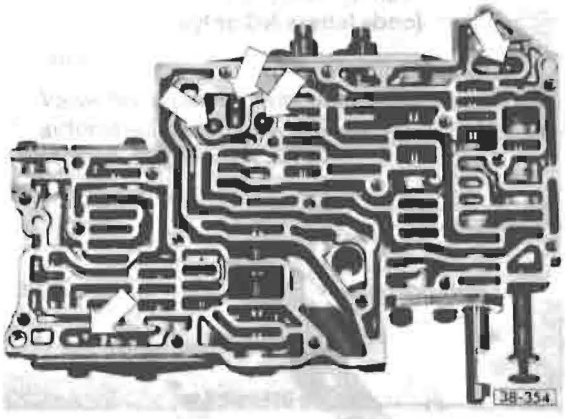

Fig. 1 Ball valves, locations in valve body

- all balls (arrows) 6 mm diameter

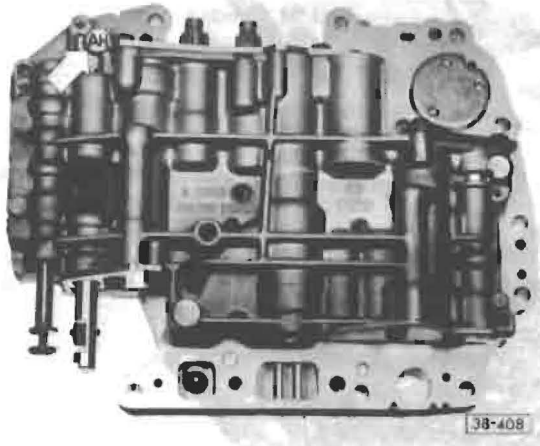

Fig. 2 Valve body, code letter/application

- code letter located on boss (arrow)

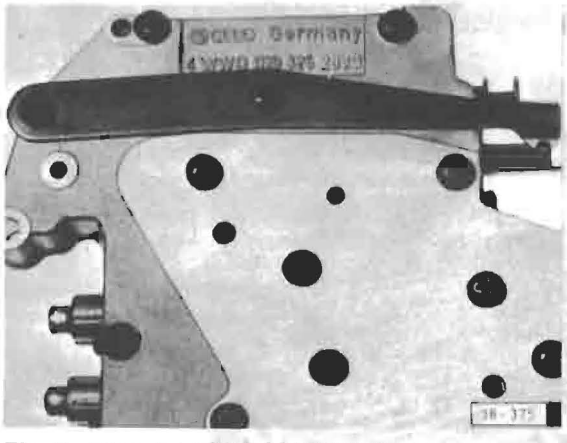

Fig. 3 Transfer plate, identification



Fig. 4 Separation plate, identification

- at arrows **1** = 3 notches
- at arrow **2** = 1 notch

Automatic transmission modifications

transmission 090—code letters NG
(from transmission no. 17 07 0)

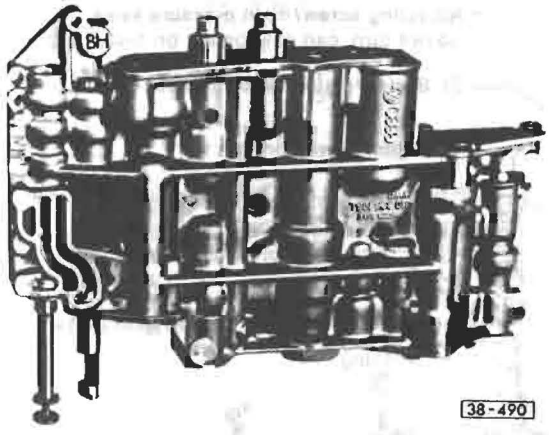

Valve body code letters

Transmission Code letters	Valve body code letters
NG	BH

Note

New valve body can be installed in transmissions from transmission No. 01 06 8

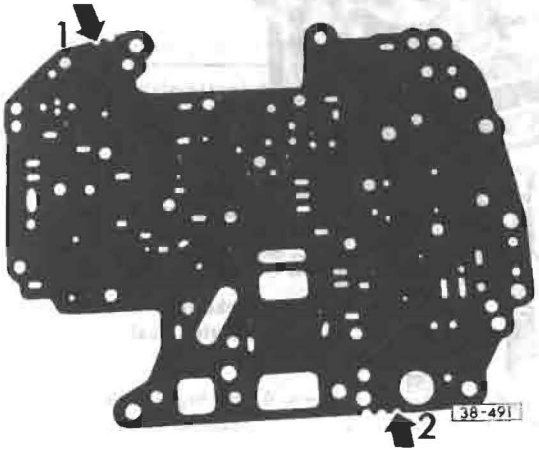

Separation plate marking

2 notches at arrow 1
3 notches at arrow 2

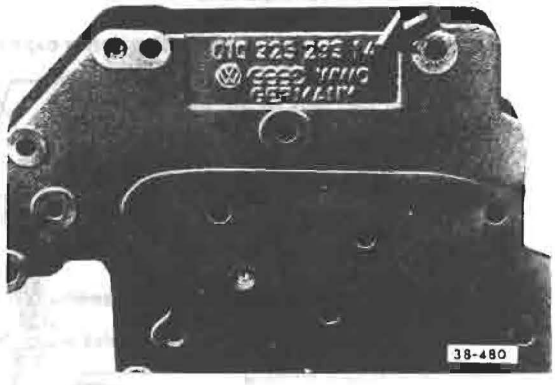

Transfer plate identification (arrow)

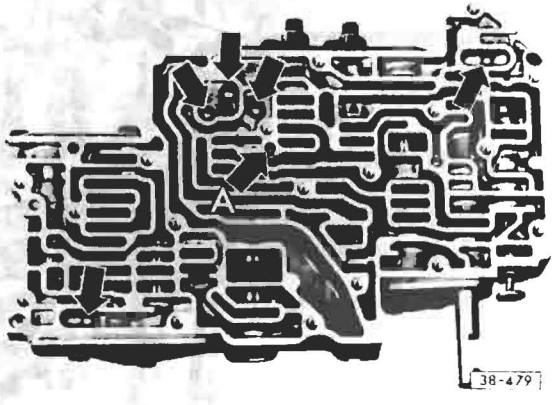

Ball valve locations in valve body

5 balls	6 mm diameter (arrows except A)
1 ball	3 mm diameter (arrow A)

Valve body assembly transmission 090
code letters NG
(up to trans. no. 16 07 0)

Note

Slight scoring on valves will not cause operating problems

Spring measurements
see spring table page 38.26
Circled numbers correspond to those in spring table

CAUTION

Several valve springs have same dimensions. However, do not interchange because they have different tolerances

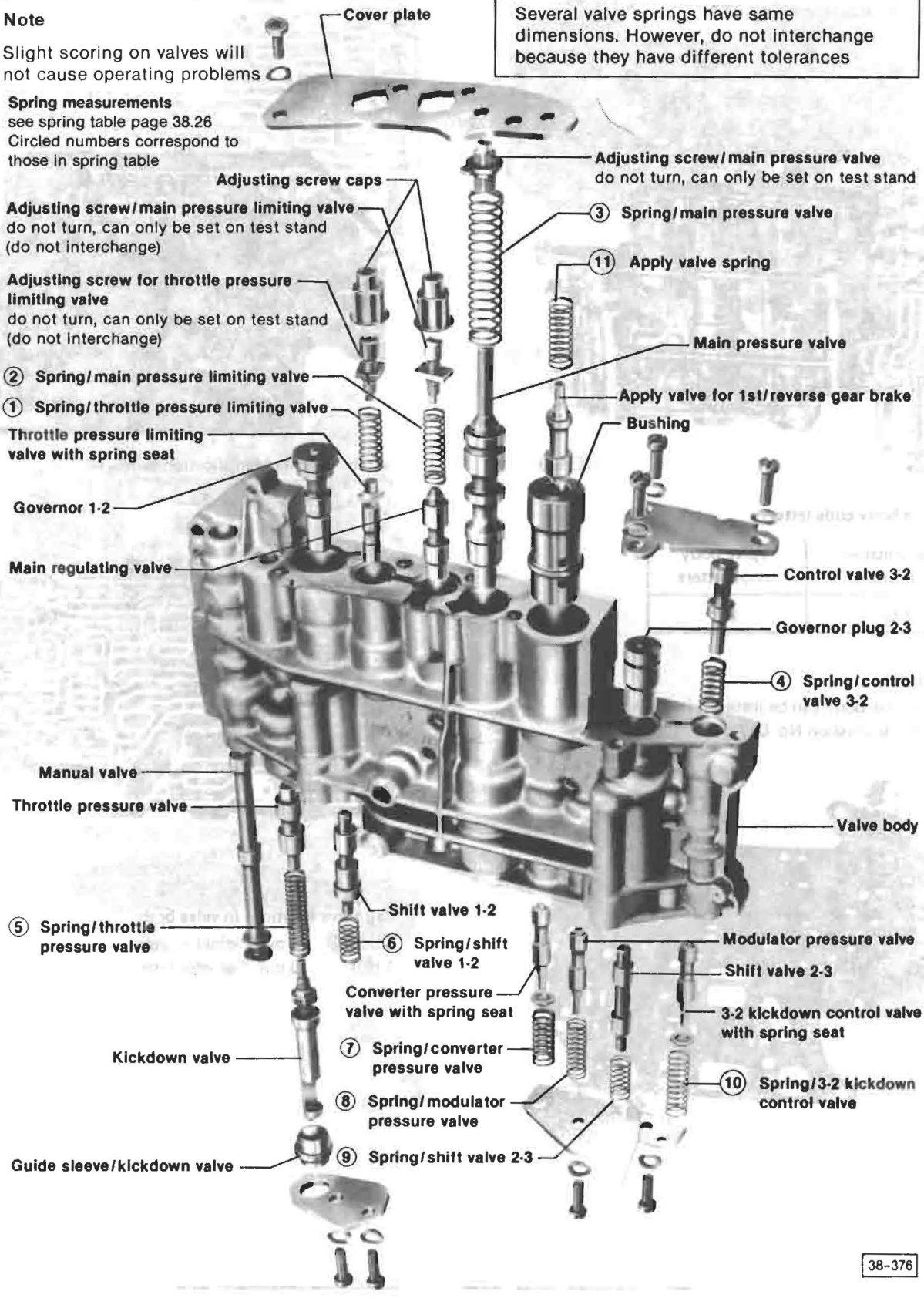

Spring table

This table allows identification of springs by their dimensions. Coil diameter and free length can vary between new and used springs (due to settling) so check spring wire thickness and number of coils first, as a means of identifying springs. If this is not enough, also use inner coil diameter and free length

CAUTION

Several valve springs have similar dimensions. However, they must not be interchanged because they have different tolerances

Transmission 090—code letters NG up to transmission no. 16 07 0
Transmission 090—code letters NH, NK

	Description	Number of coils	Wire thickness mm (in.)	Free length[1] mm (in.)	Inner diameter[2] of coil mm (in.)
(1)	Spring/throttle pressure limiting valve	14 1/2	1.1 (0.043)	35.3 (1.389)	7.7 (0.303)
(2)	Spring/main pressure limiting valve	11	1.2 (0.047)	32.4 (1.275)	7.7 (0.303)
(3)	Spring/main pressure valve	16 1/2	1.5 (0.059)	77.0 (3.031)	11.9 (0.468)
(4)	Spring/control valve 3-2	12 1/2	1.0 (0.039)	32.4 (1.275)	7.7 (0.303)
(5)	Spring/throttle pressure valve	16	1.25 (0.049)	43.4 (1.708)	7.75 (0.035)
(6)	Spring/shift valve 1-2 except code letters NH	9 1/2	0.8 (0.031)	26.0 (1.024)	8.2 (0.323)
	Spring/shift valve 1-2 code letters NH only	8 1/2	0.9 (0.035)	28.8 (1.134)	8.1 (0.318)
(7)	Spring/converter pressure valve	8 1/2	1.25 (0.049)	22.2 (0.874)	7.7 (0.303)
(8)	Spring/modulator pressure valve	11 1/2	0.8 (0.031)	28.6 (1.126)	7.75 (0.305)
(9)	Spring/shift valve 2-3	9 1/2	0.8 (0.031)	26.0 (1.024)	8.2 (0.323)
(10)	Spring/kickdown control valve 3-2	11 1/2	0.9 (0.035)	28.4 (1.118)	8.1 (0.318)
(11)	Spring/apply valve 1st/reverse gear brake	11 1/2	0.9 (0.035)	28.4 (1.118)	8.1 (0.318)

[1]Free length can vary due to tolerances and settling
[2]Inner coil diameter is within a tolerance of ± 0.3 mm (0.012 in.)

Valve body modifications
transmission 090—code letters NG
(from transmission no. 17 07 0)

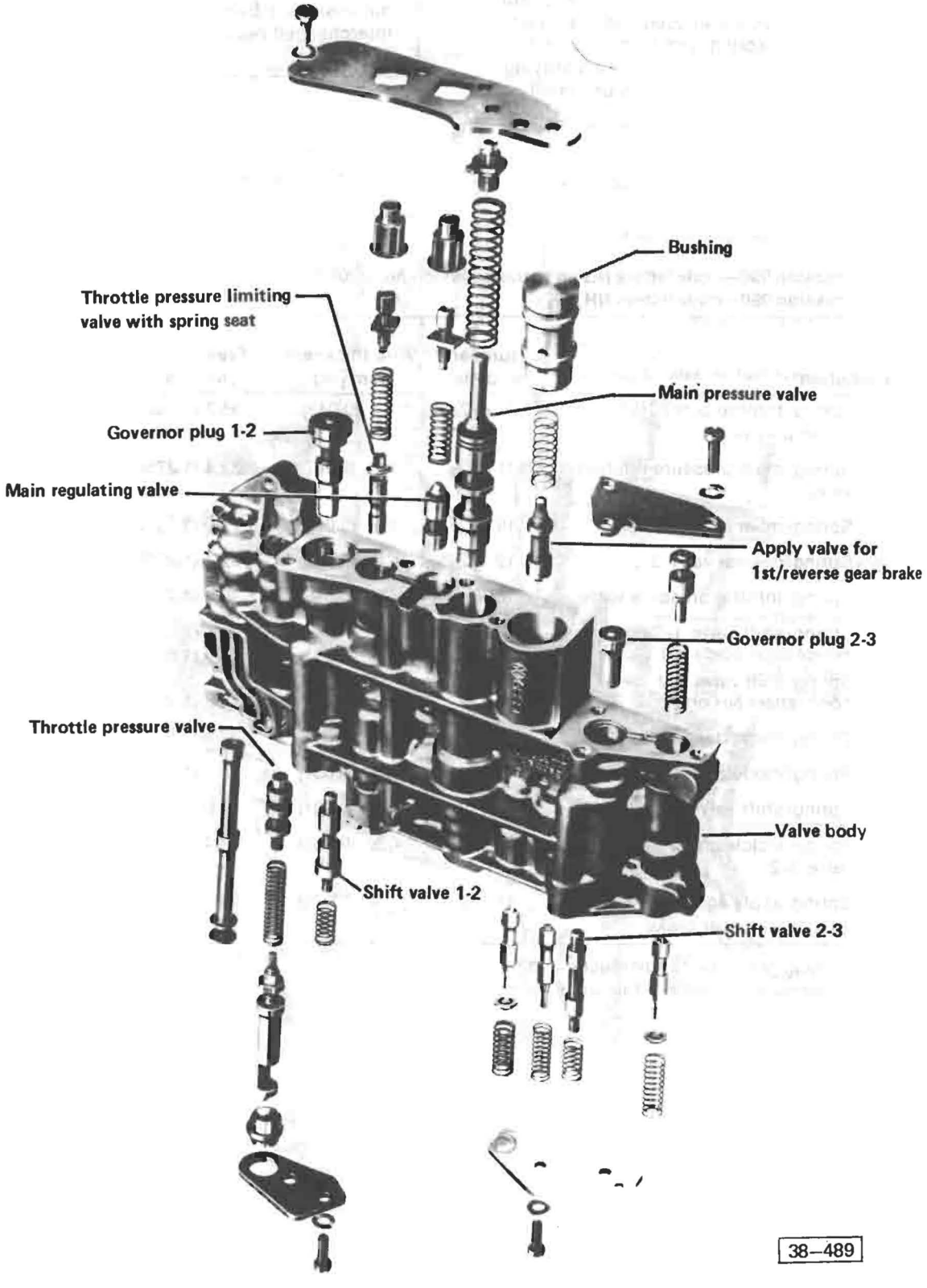

38.31 Valve body
trans. 090 code letters NG
(from trans. no. 17 07 0)

Automatic transmission modifications

transmission 090—code letters NG
(from transmission no. 17 07 0)

Spring table

This table allows identification of springs by their dimensions. Coil diameter and free length can vary between new and used springs (due to settling) so check spring wire thickness and number of coils first, as means of identifying springs. If this is not enough, also use inner coil diameter and free length

CAUTION
Several valve springs have similar dimensions. However, they must not be interchanged because they have different tolerances

Description	Coils	Wire thickness mm	Free length (1) mm	Inner diameter (2) of coil mm
Spring/throttle pressure limiting valve	14.5	1.1	37.9	7.7
Spring/main pressure limiting valve	12.5	1.2	27.5	7.6
Spring/main pressure valve	16.5	1.4	69.2	11.9
Spring/control valve 3–2	16.5	1.1	44	7.75
Spring/throttle pressure valve	11.5	0.8	28.6	7.75
Spring/shift valve 1–2	6.5	0.9	19.9	8.1
Spring/shift valve 2–3	8.5	0.8	17.4	6.95
Spring/modulator pressure valve	12.5	1.0	32.4	7.7
Spring/converter pressure valve	8.5	1.25	22.2	7.7
Spring/kickdown control valve 3–2	11.5	0.9	28.4	8.1
Spring/apply valve 1st/reverse gear brake	10.5	0.63	36.3	9.0

(1) Free length can vary due to tolerances and settling
(2) Inner coil diameter is within tolerance of ± 0.3 mm

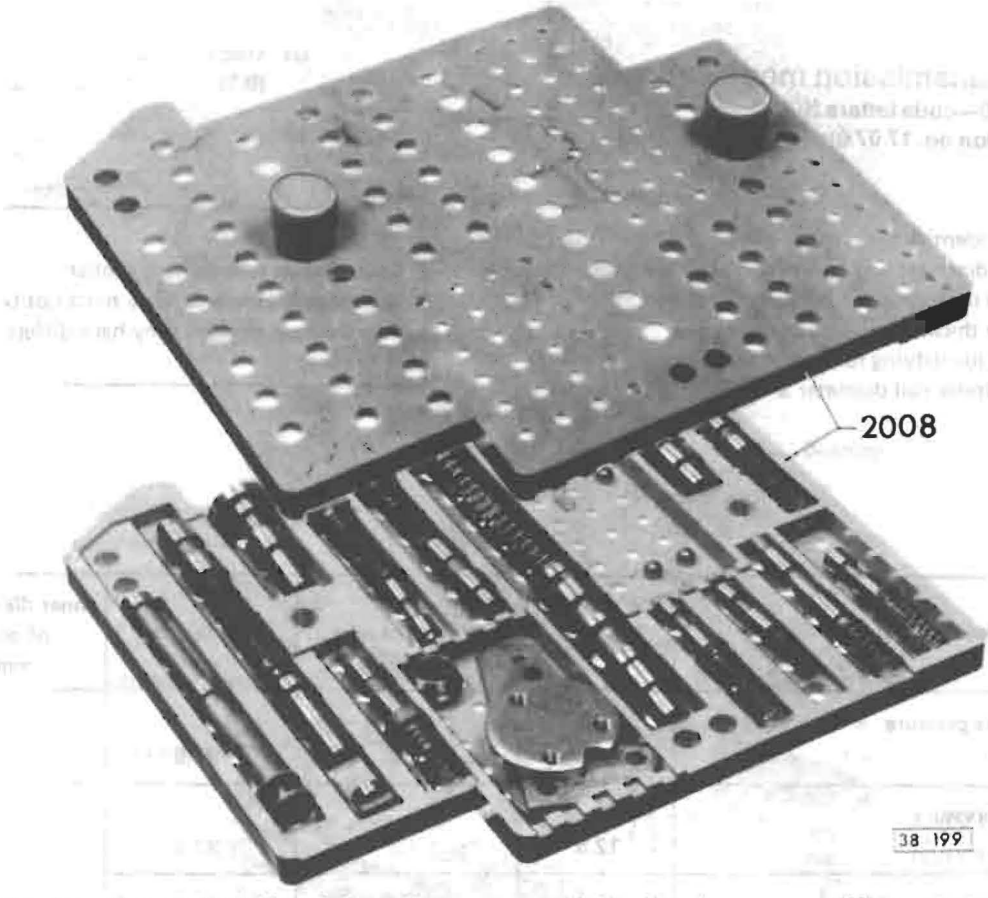

Valve body, disassembling/cleaning

Note

Valve body should only be disassembled for cleaning or when transmission failure was caused by burnt friction linings or excessively dirty ATF. If ATF is still fairly clean, place the complete valve body in cleaning solution and then dry it afterwards with compressed air.

Storage tray, tool number 2008, is used to store all valves, springs and screws from valve assembly.

Tray outer shape corresponds to shape of valve body.

To be sure parts are reinstalled in their original location, they should be placed in storage tray.

Ball valves can be stored in space provided for bolts

- — remove rear end plate, take out valves and springs one after another and place them in tray
- — remove end plate from other side and repeat procedure
- — place lid on tray
- — immerse tray complete with parts in cleaning solution. Dry with compressed air. Do not use water, fluffy rags or cloths when cleaning parts

Valve body, assembling

Note

Lubricate all parts with ATF when assembling and check for free movement. Valves should slide under their own weight.

Valves which are slightly scored may be reused. This will not affect operation of transmission.

3-2 kickdown control valve must be cleaned separately, because those parts cannot be put into storage tray.

All parts must be completely clean.

Valves and springs must be put back into same holes from which they were removed

- — insert springs and valves into one side in locations shown in exploded view (see page 38.25) and then install end plate before proceeding with other side

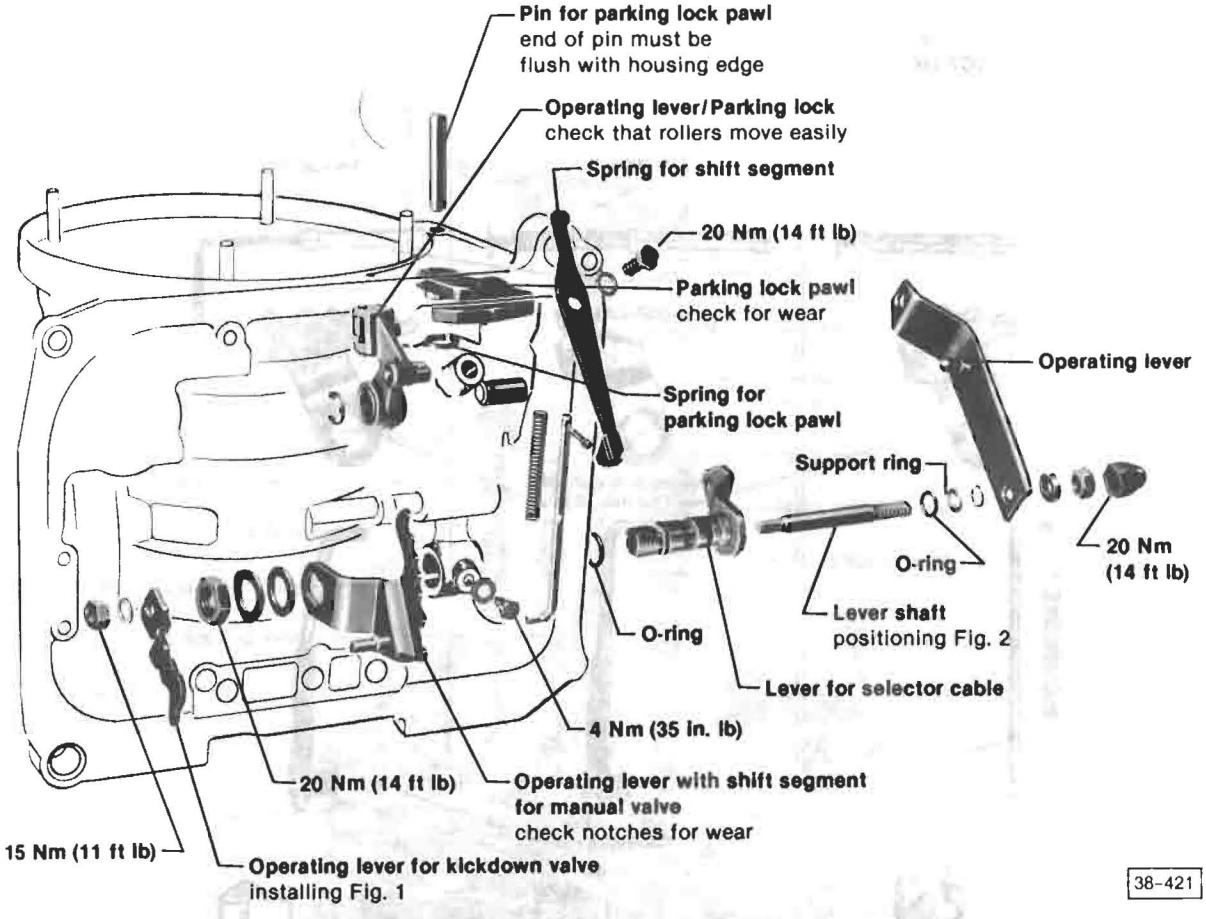

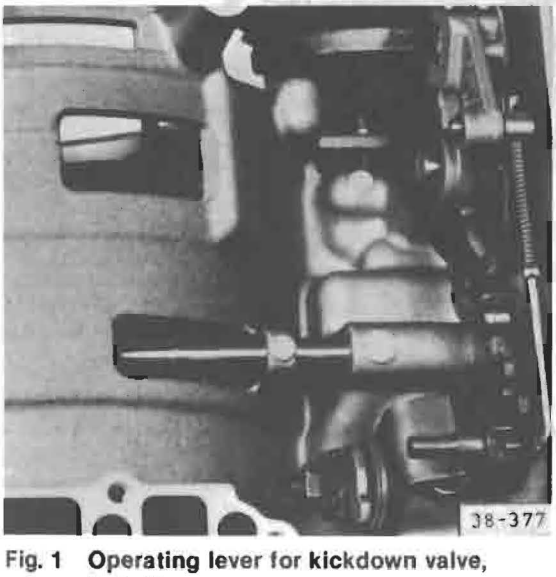

Fig. 1 Operating lever for kickdown valve, installing

- angled ends of operating lever points toward center of transmission

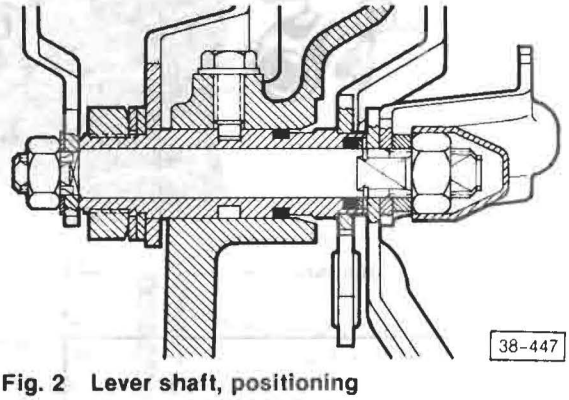

Fig. 2 Lever shaft, positioning

Manual valve, operating rod and parking lock, modifications

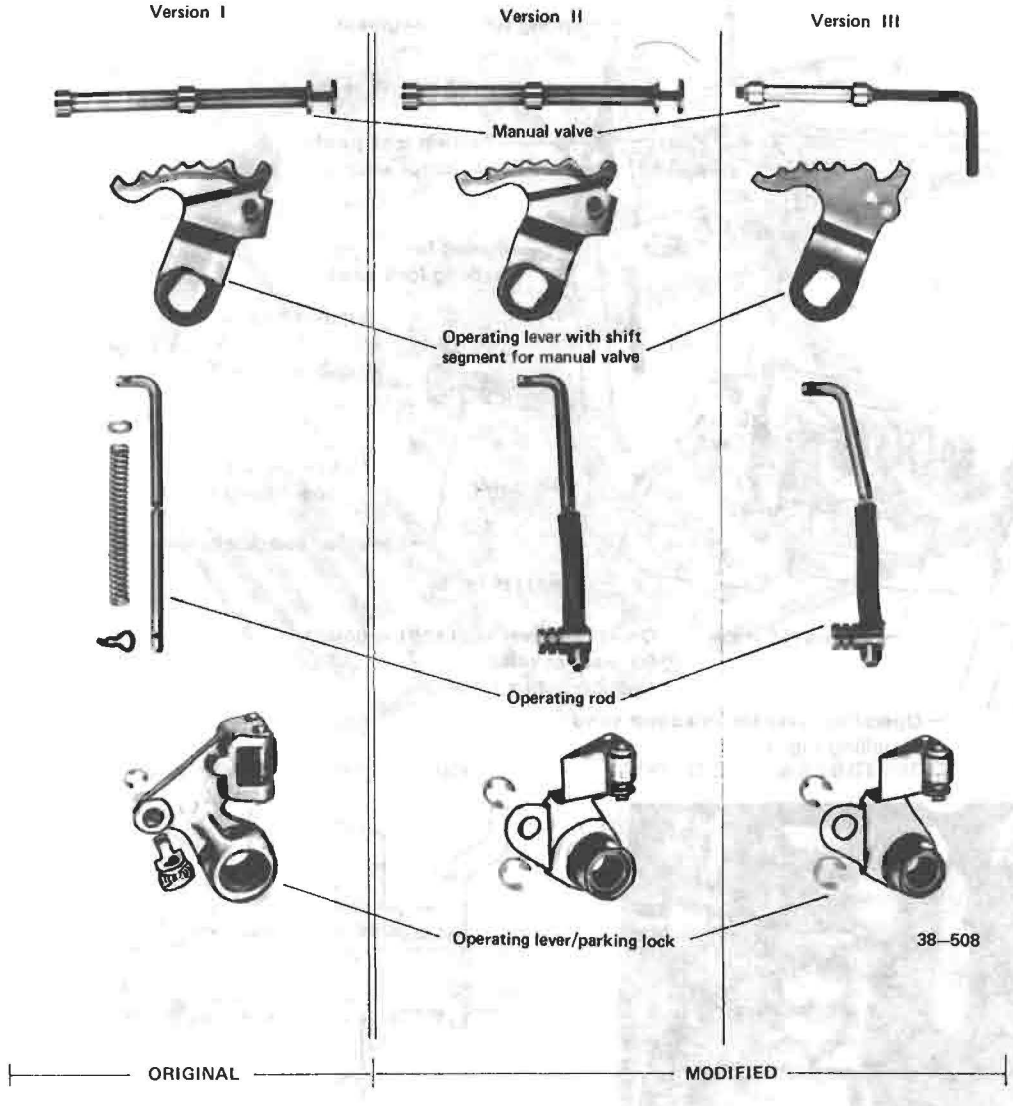

CAUTION

Only install parts combinations illustrated for each respective version

Valve Body Assembly, disassembling/assembling

Transmission with code letters **NH, NK**

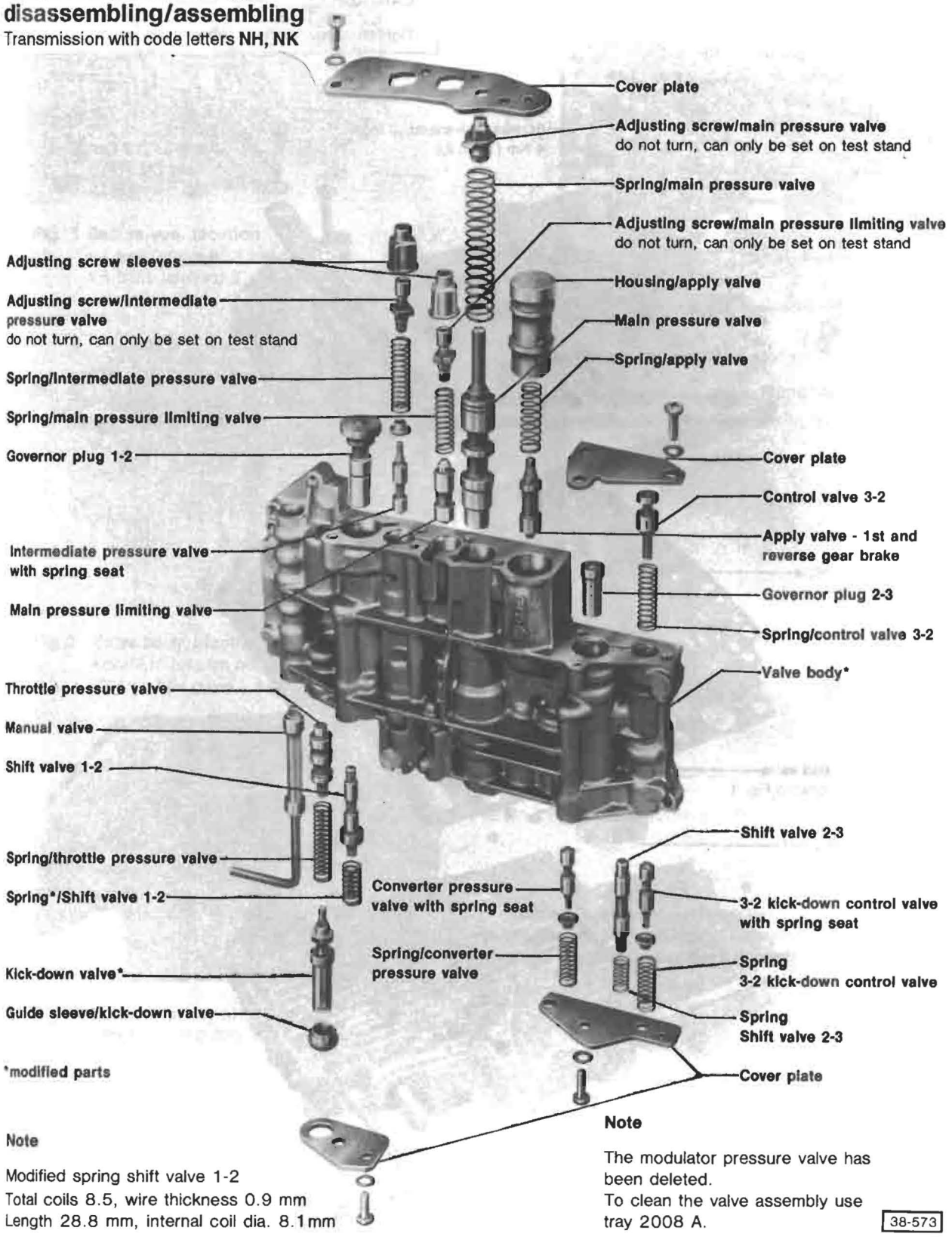

Note

Modified spring shift valve 1-2
Total coils 8.5, wire thickness 0.9 mm
Length 28.8 mm, internal coil dia. 8.1 mm

Note

The modulator pressure valve has been deleted.
To clean the valve assembly use tray 2008 A.

38-573

Transfer Plate, Separation Plate, Valve Body

CAUTION

Tighten screws evenly when assembling

Transmission with code letters **NH, NK**
Modified valve assembly and separation plate

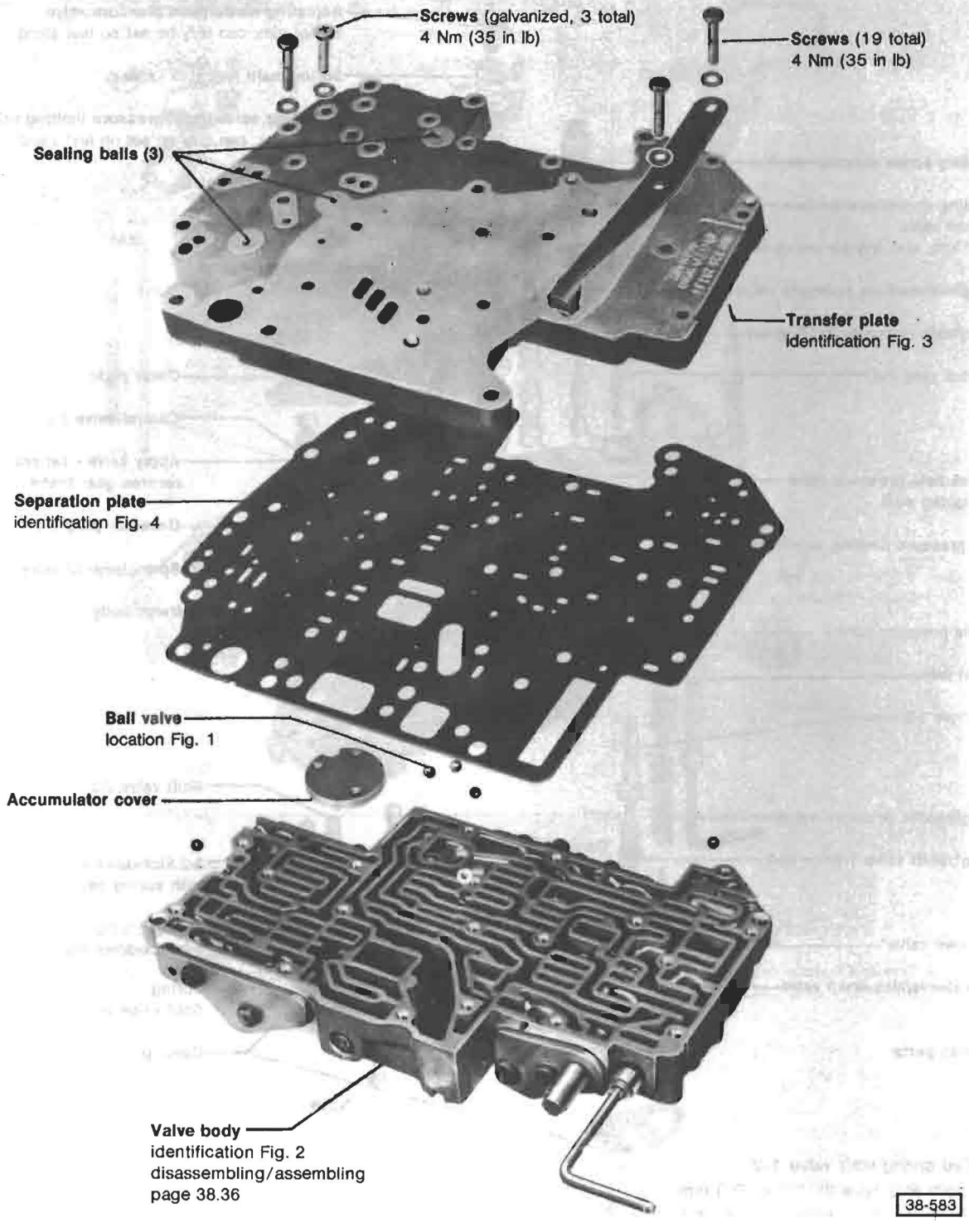

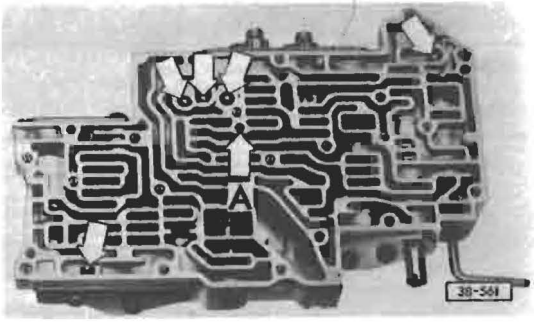

Fig. 1 Ball valves, location
- 1 ball (arrow **A**) 3 mm dia.
- 5 balls (arrows) 6 mm dia.

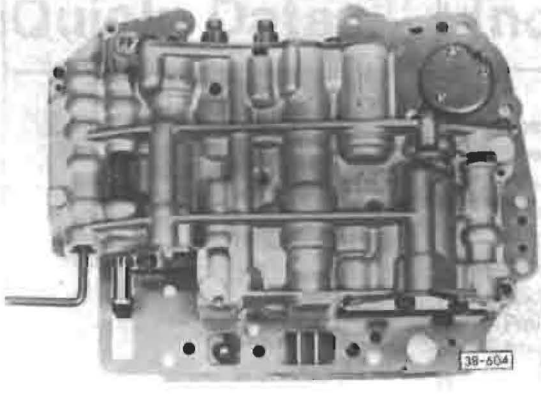

Fig. 2 Valve body, identification
- code letters on boss (arrow): FF, FFA (w/NH trans.), NK w/FFA valve body



Fig. 3 Transfer plate, identification
- Part No. 010 325 283 J

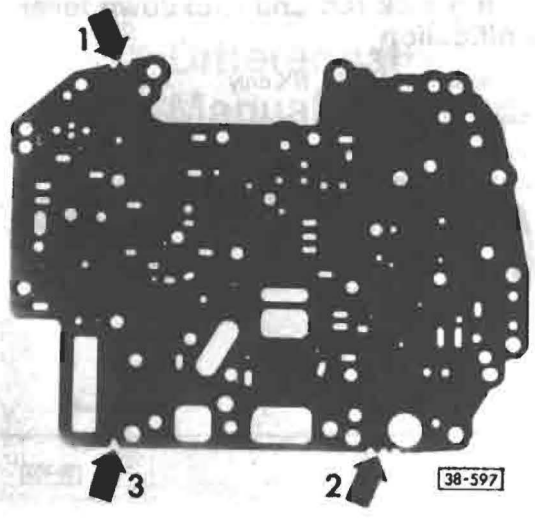

Fig. 4 Separation plate, identification
- 2 notches at arrow 1
- 3 notches at arrow 2
- 1 notch at arrow 3

Parking lock rod and Kickdown lever, modification

Transmission 090—**NH, NK** only

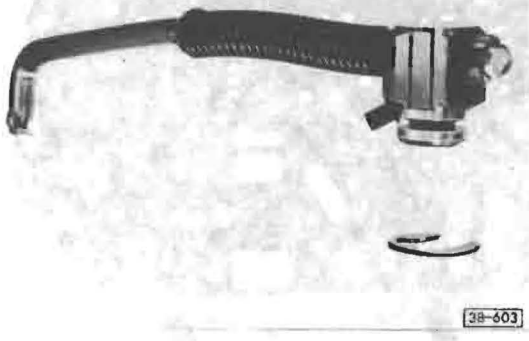

38-603

Parking lock operating rod, modification

With modified operating rod (on hexagon, arrow), parking lock engagement lever is secured with only one circlip

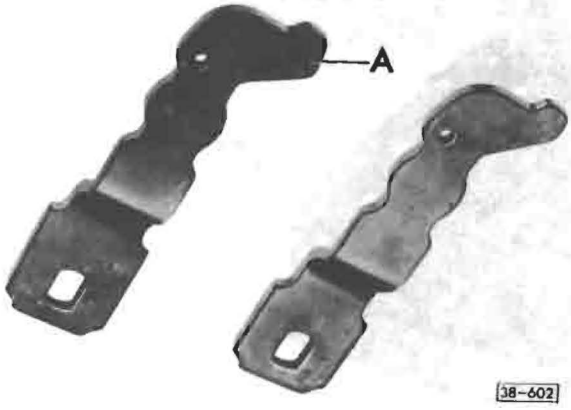

38-602

Kickdown valve operating lever, modification

Kickdown valve operating lever has been flattened slightly at contact surface **A**

Note

New kickdown valve operating lever can be installed in previous transmissions, but earlier-type operating lever must not be installed in transmissions with new kickdown valve.

Differential
Manual Transmission

Quick Data

Index

4-Speed 091, 091/1
5-Speed 094
- Assembly 39.2
- Bearings 39.3–39.5
- Housing 39.3
- Pinion
  - adjusting 39.10, 39.11
- Pinion/Side gears 39.6
- Ring gear 39.3, 39.4
  - adjusting 39.12, 39.13
  - backlash 39.13, 39.14
- Ring/Pinion gears
  - adjusting 39.7–39.9
- Shim S_3 39.11

Differential—Auto. Trans.
— See page 39.49

094-4WD Syncro
- Differential with lock
  - assembly 39.20
  - bearing outer race 39.24
  - bearings 39.21–39.23
  - housing 39.21
  - pinion shafts 39.22
  - ring gear 39.20–39.23
- Differential without lock
  - assembly 39.15
  - bearing outer race 39.19
  - bearings 39.16–39.18
  - housing 39.16
  - pinion shafts 39.17
  - ring gear 39.15–39.18
- Driveshaft
  - flange oil seal 39.44
  - removing/installing 39.43
- Front final drive 39.30, 39.31
  - adjusting rings 39.32, 39.33
  - axle flange 39.32, 39.33
  - circlip 39.33
  - housing 39.34
  - mounting 39.32
  - technical data 39.42
- Front pinion 39.39
  - bearing 39.40
  - grooved nut 39.40
  - turning torque 39.41
- Locking pin 39.28, 39.29
  - backlash 39.29
- Pinion/Side gears 39.25
- Removing 39.33
- Ring gear/Pinion
  - adjusting 39.26
  - backlash 39.27
  - screw-in depth 39.26, 39.27

CAUTION

Inner and outer races of tapered roller bearings are matched and must not be interchanged. Replace both bearings at same time. Ring gear/pinion must be adjusted after replacing differential housing, cover or bearings. Side gear end play must be adjusted if differential housing, cover or side gears have been replaced

Note

Drive flange oil seal can be replaced with final drive installed, see Repair Group 34

Ring gear/pinion adjusting, page 39.7-39.14
backlash adjusting, page 39.13

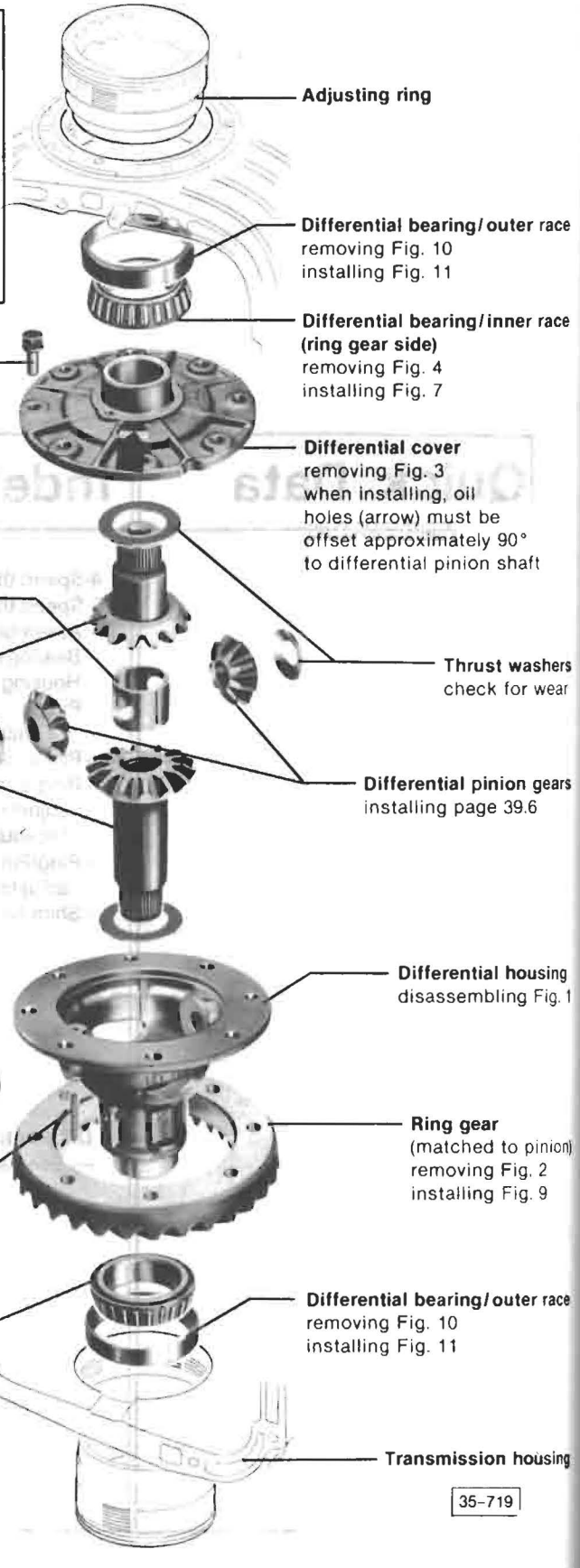



Fig. 1 **Differential housing, disassembling**

— use jaw covers on vise

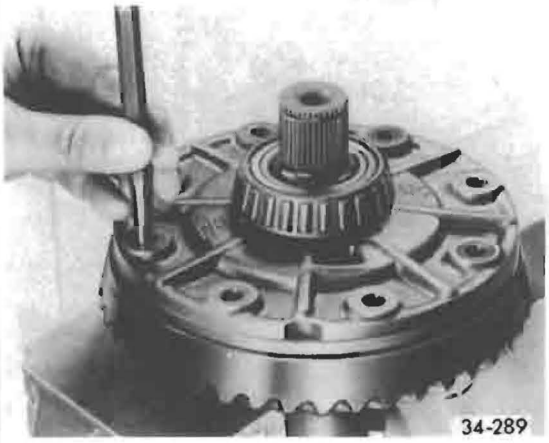

Fig. 2 **Ring gear, removing**
(matched to pinion)

— use drift to separate ring gear from housing

CAUTION
Do not damage threads in ring gear

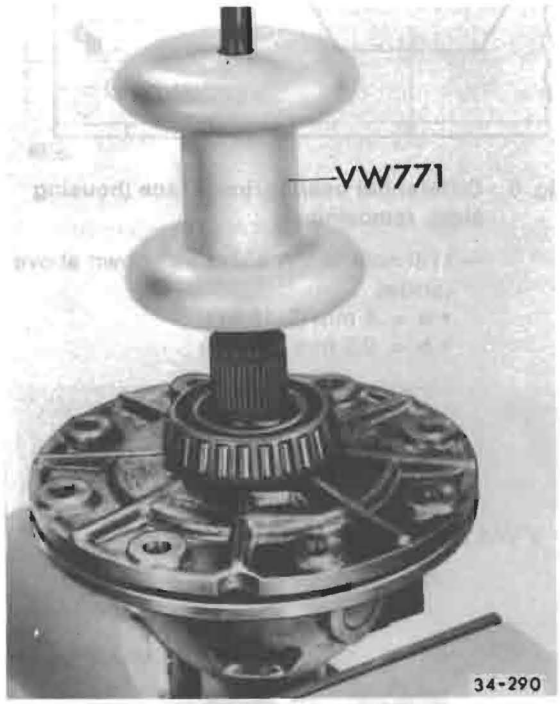

Fig. 3 **Differential cover, removing**

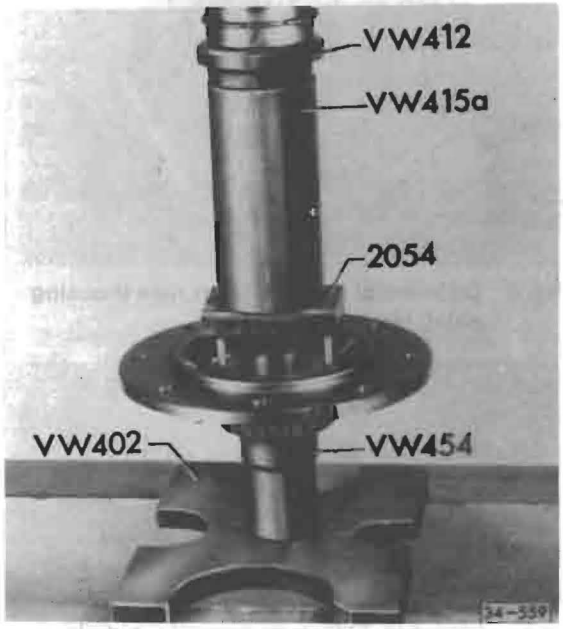

Fig. 4 **Differential bearing/inner race (ring gear side), removing**

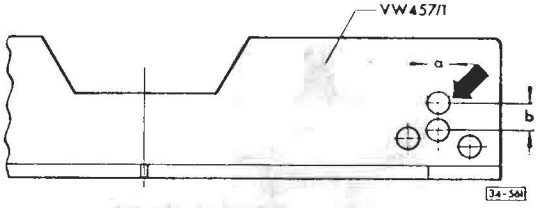

Fig. 5 Differential bearing/inner race (housing side), removing

— drill hole in VW 457/1 as shown above (arrow)
- **a** = 8 mm (5/16 in.)
- **b** = 9.5 mm (3/8 in.)

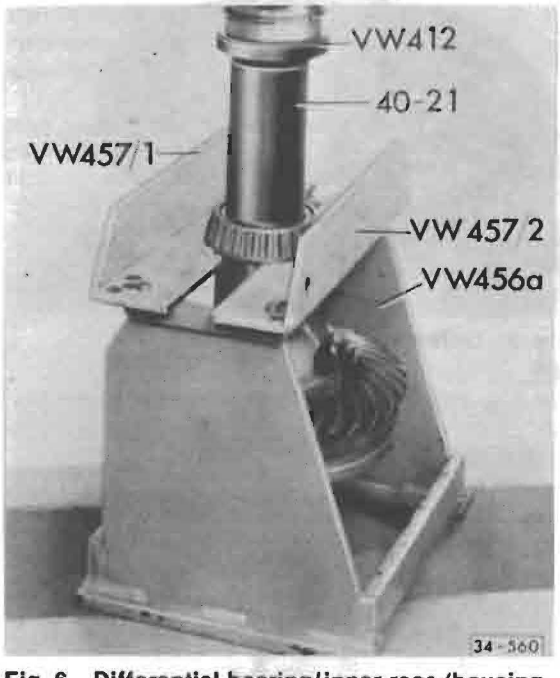

Fig. 6 Differential bearing/inner race (housing side), removing

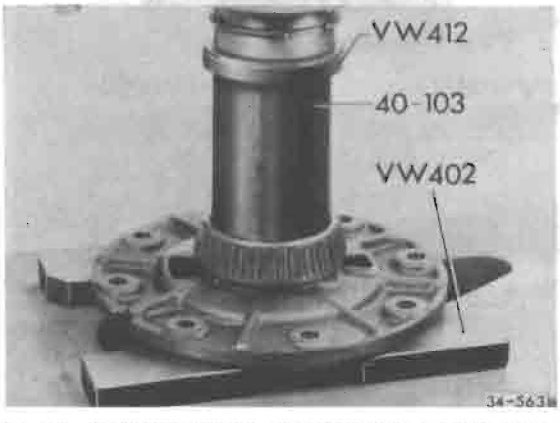

Fig. 7 Differential bearing/inner race (ring gear side), installing

— heat to approx. 100°C (212°F) and press on

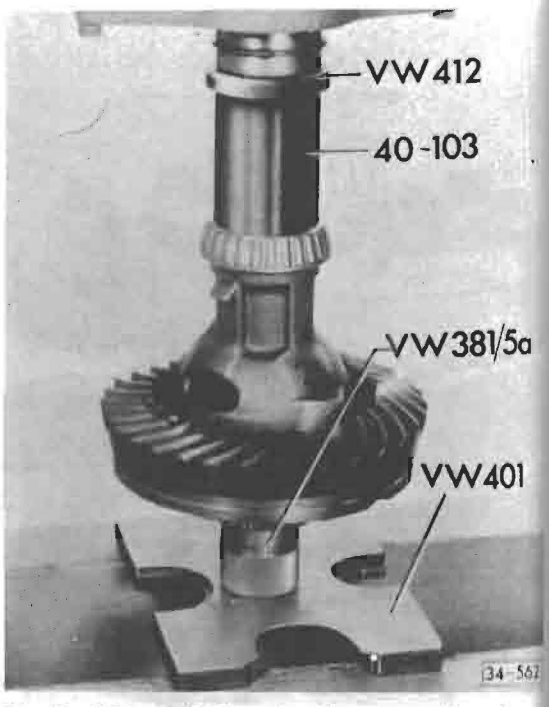

Fig. 8 Differential bearing/inner race (housing side), installing

— heat to approx. 100°C (212°F) and press on



Fig. 9 Ring gear, installing

CAUTION

Clean contact surfaces are essential to ensure that ring gear, differential housing, and cover fit properly. Remove all burrs and pressure marks with oil stone

— heat ring gear to approx. 100°C (212°F) and install
- **A** = centering pins (local manufacture)

Note

If ring gear/pinion are replaced, readjustment is necessary

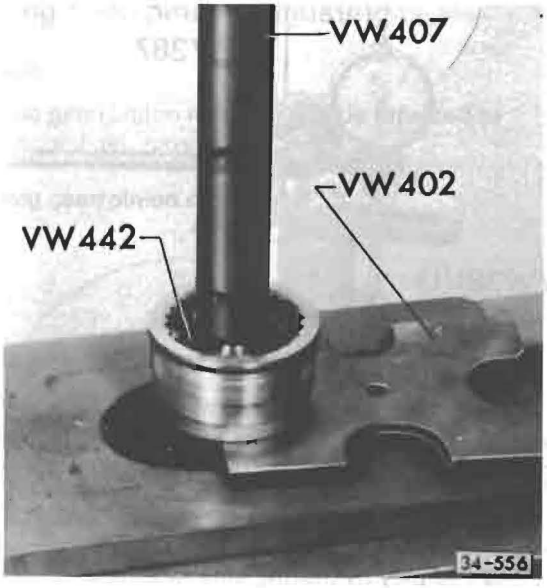

Fig. 10 Differential bearing/outer race, removing



Fig. 11 Differential bearing/outer race, installing

— press race in until seated

Differential pinion/side gears, adjusting end play

Note

Spacer sleeve ensures adequate backlash between side gears and differential pinion gears even when there is axial pressure on side gears. If differential housing, cover, side gear or spacer sleeve is replaced, size of spacer sleeve must be determined again

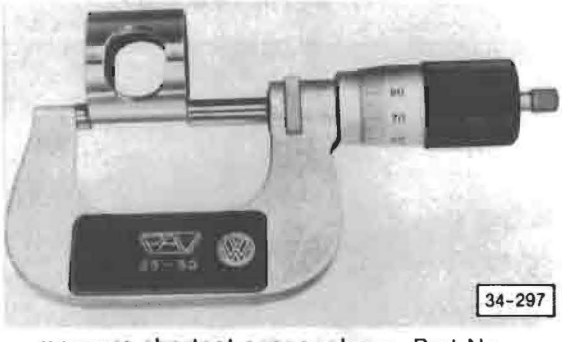

— measure shortest spacer sleeve, Part No. 002 517 241, with micrometer and mark dimension on sleeve with electric marker or similar device. Sleeve should then always be used as measuring sleeve



— place side gear (with short shaft) and both thrust washers in cover
— attach clamping sleeve VW 381/5a and clamp gear tightly against cover
— place side gear (with long shaft) in differential housing
— insert measuring sleeve, and bolt housing and cover together with 4 M8 x 20 bolts

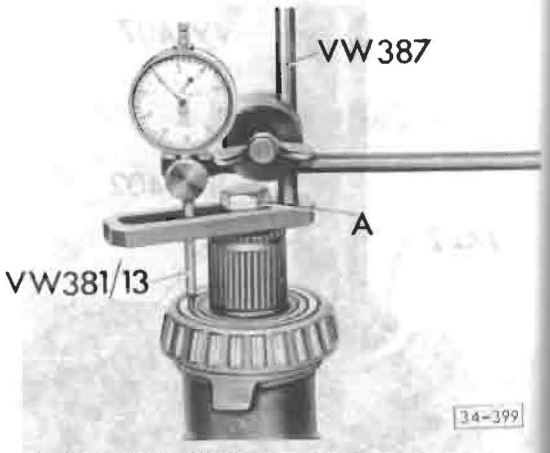

— install dial indicator with 3 mm range
  • **A** = M10 x 25 bolt
  • VW 381/13 = 52 mm
— zero dial indicator with 2 mm preload
— find end play by moving side gear up and down
— add measured play and length of measuring sleeve together. Find this figure in table under **x** range and select proper sleeve

x range	Sleeve length	Part No.
31.87-31.95	31.84	002 517 241
31.96-32.04	31.93	002 517 242
32.05-32.13	32.02	002 517 243
32.14-32.22	32.11	002 517 244
32.23-32.33	32.20	002 517 245

— disassemble differential and remove measuring sleeve
— install sleeve selected from above table and assemble differential **without** differential pinion shaft
— recheck play. Play should be
  • 0.03-0.17 mm

Ring gear/pinion, adjusting

Note

Ring gear/pinion must **always** be replaced as matched set, never individually

Ring gear/pinion markings

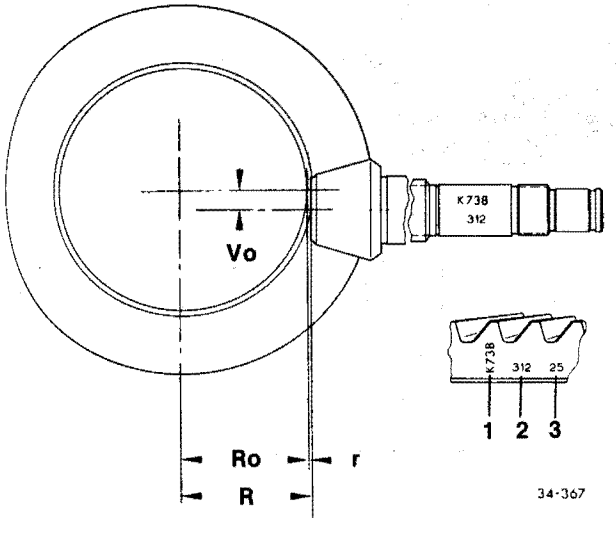

Fig. 1 **Service gears**

1 = Marking **K 738** means Klingelnberg gear set with ratio of 7:38 teeth

2 = Matching number of gear set **312**

3 = Deviation **r** based on master gauge used in special test machine in production. Deviation **r** is always given in 1/100 mm. **25** shown in example means that **r** = 0.25 mm

Ro = Length of master gauge in production: **Ro** = 63 mm

R = Actual dimension between ring gear centerline and end face of pinion at quietest running point for this gear set

Vo = Hypoid offset = 10 mm

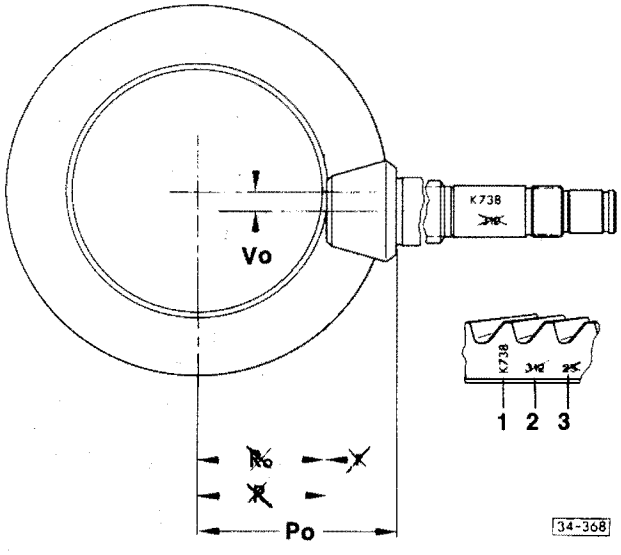

Fig. 2 **Production gears**

X = Markings x'ed-out are not shown on production gears

Po = Setting dimension for production gears

CAUTION

In production, position of pinion is determined by dimension **Po** (ring gear centerline to back of pinion head)

Marking of deviation **r** on ring gear and matching number have been discontinued. It is therefore necessary to measure position of pinion **before** removing it when parts which affect position of pinion are to be replaced. See page 39.9

Ring gear/pinion, adjusting

CAUTION

Maximum possible care and cleanliness during all assembly and measuring operations are essential for satisfactory results

Note

Ring gear/pinion must be adjusted if gears themselves have been replaced. If other parts which affect position of pinion are to be replaced, pinion depth **R** must be measured **before** disassembling, and pinion set to this dimension when assembling. See page 39.9

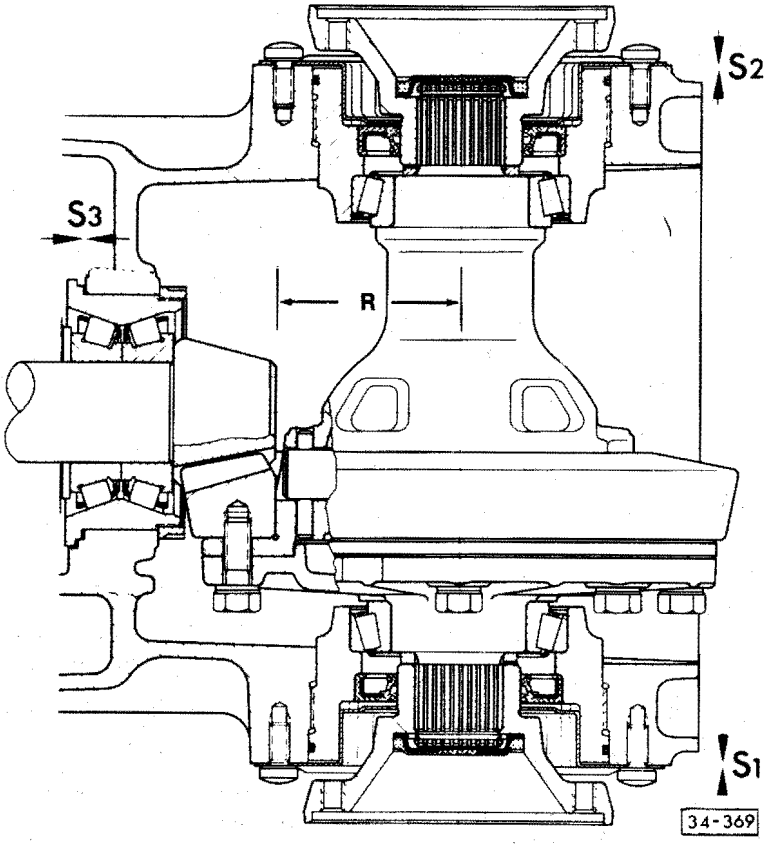

Fig. 3 Ring gear/pinion adjustment points

- S_1 = Screw-in depth of adjusting ring (ring gear side)
- S_2 = Screw-in depth of adjusting ring (housing side)
- S_3 = Shim for pinion

Ring gear/pinion adjustment procedure

Work sequence

— find screw-in depth S_1 and S_2
  • tapered roller bearing preload is determined by ring gear turning torque
— adjust pinion and check S_3
  • adjust pinion with shims so that correct dimension **R** is attained
— adjust backlash

Ring gear/pinion, adjusting

Note

It is only necessary to adjust pinion, ring gear, or both, or shift forks if parts which directly influence setting have been replaced. See table to avoid unnecessasry adjustments

To be adjusted / Parts replaced	Shift forks see Repair Group 35	Pinion S_3 from actual dimension R see page 39.9	Pinion S_3 from deviation r see page 39.10	Ring gear S_1 and S_2 see page 39.12
Transmission case	X	X		X
Adjusting ring for final drive				X
Differential housing				X
Cover for differential housing				X
Differential tapered roller bearings				X
Double tapered roller bearing for pinion	X	X		
Ring gear/pinion	X		X	X
Ball bearing for drive shaft	X			

Finding position of pinion
(actual dimension)

Finding position of pinion is only necessary when deviation **r** is not marked on ring gear, and parts are to be replaced which directly influence position of pinion. These are: **both pinion bearings and transmission housing.**

Work sequence

– remove differential housing
– assemble measuring bar as described on page 39.10 and place it in transmission housing

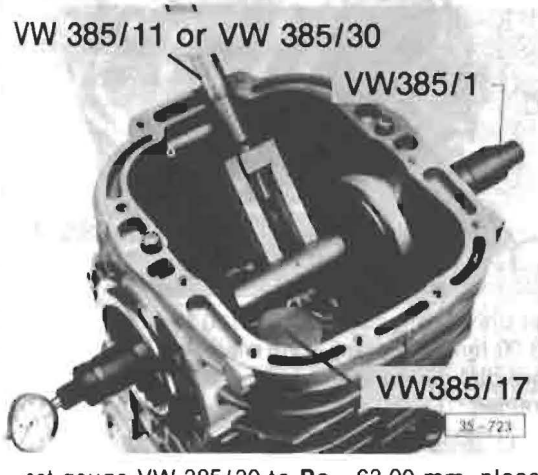

– set gauge VW 385/30 to **Ro** = 63.00 mm, place on bar and zero dial indicator (3 mm range) with 1 mm preload
— measure difference from **Ro.** This measurement corresponds to deviation **r.** Note reading
Example: r = 0.25 mm
— after installing new parts, adjust pinion. See pages 39.10-39.11. Deviation **r** is used to determine thickness of shim S_3

Pinion, adjusting

Note

Ring gear/pinion need adjusting if gears themselves have been replaced. If other parts which affect position of pinion are to be replaced, setting must be measured **before** disassembling and pinion set to this dimension when assembling. See page 39.9

Work sequence

— install tapered roller bearing and needle bearing inner race for 1st gear on pinion shaft
— torque needle bearing inner race to 210 Nm (152 ft lb)

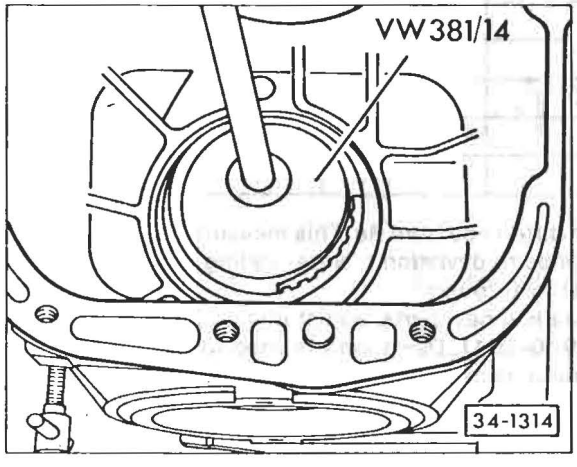

— install pre-assembled pinion in transmission housing **without** shim S_3
— install retaining ring and tighten with VW 381/14 to 225 Nm (162 ft lb)
— back off and retighten to 225 Nm (162 ft lb)

Finding dimension e

— screw in one adjusting ring until flush with transmission housing

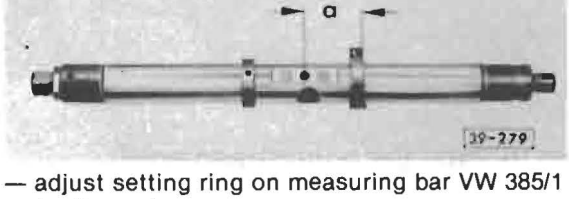

— adjust setting ring on measuring bar VW 385/1 to dimension **a**
• **a** = approx. 57 mm



— assemble measuring bar as shown
• dial gauge extension VW 385/16 = 12.3 mm



— place measuring disc VW 385/17 on end of pinion
— place measuring bar in housing and screw 2nd adjusting ring in until flush with housing
— move 2nd centering ring VW 385/4 outward with movable setting ring on measuring bar until bar can just be turned by hand

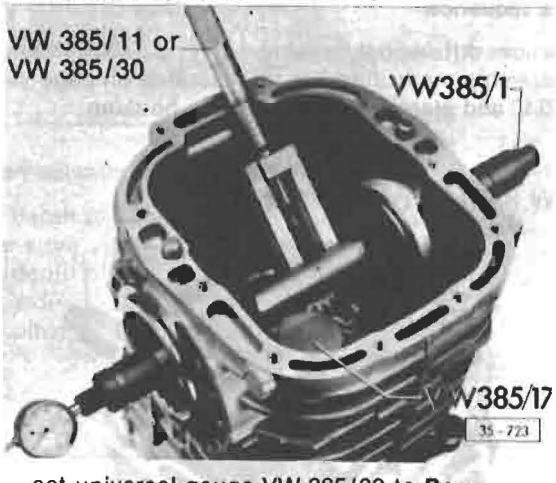

— set universal gauge VW 385/30 to **Ro** = 63.00 mm and place it on measuring bar
— zero dial gauge (3 mm range) with 1 mm preload

Note

Gauge VW 385/11 can be used instead of universal gauge VW 385/30

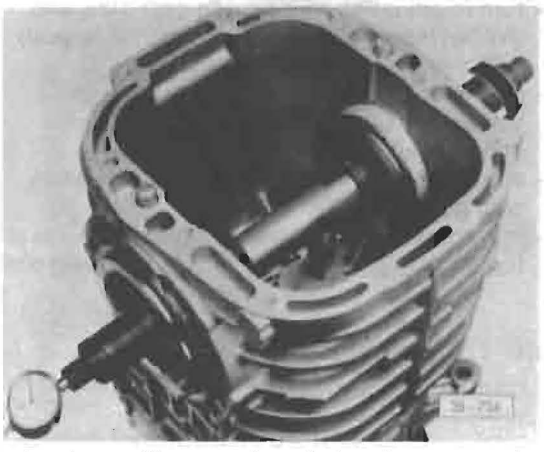

– turn bar until measuring pin touches measuring disc on end of pinion, and needle shows maximum deflection. This is dimension **e**
Example: e = 0.40 mm

Shim S_3, determining thickness

$$S_3 = e + r$$

e = measured figure (max. deflection)
r = deviation (marked on ring gear in 1/100 mm or found by actual measurement)

Example

Dial gauge reading for **e**	0.40 mm
Deviation **r**	+ 0.25 mm
S_3 shim thickness	= 0.65 mm

S_3 shims available

Part No.	Thickness (mm)
001 311 391	0.15
001 311 392	0.20
001 311 393	0.30
001 311 394	0.40
001 311 395	0.50
001 311 396	0.60

Note

Shim tolerances make it possible to select any required thickness for **S_3**

Measure shims at several points with micrometer and check for burrs and damage

Use only shims which are in good condition

Adjustment (dimension r), checking

— install pinion with measured shims **S_3** and turn several times in both directions
— place measuring bar in position and check measurements
  • if shims have been selected correctly, dial gauge (reading counterclockwise), should show deviation **r** within tolerance of 0.04 mm

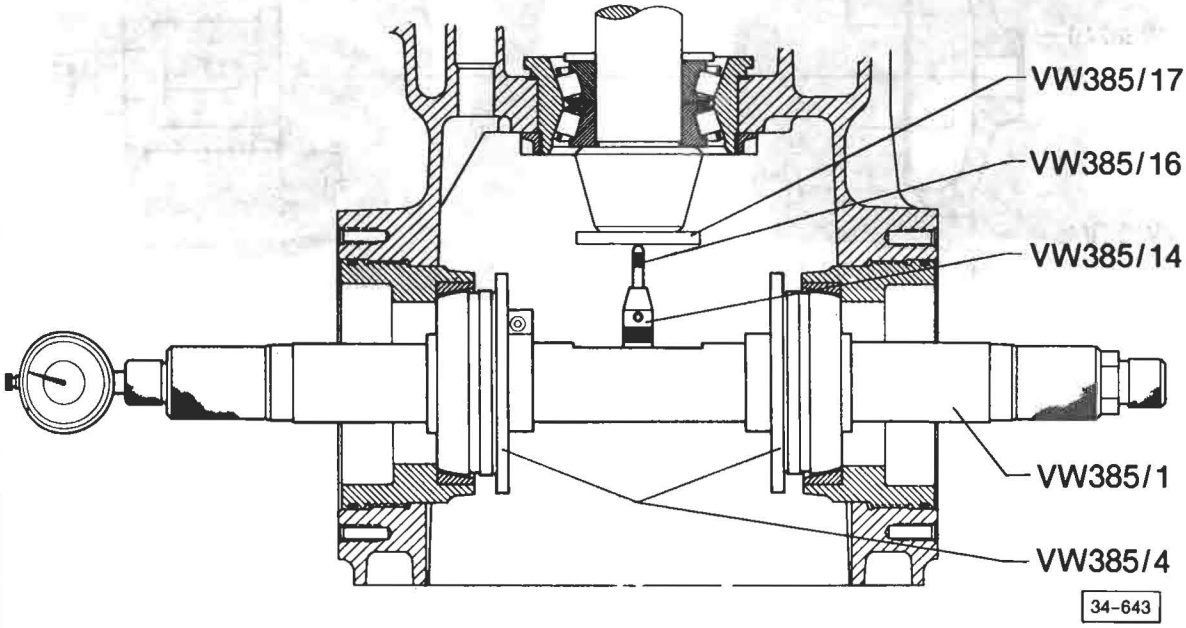

Ring gear, adjusting
(pinion removed)

Note

Ring gear must be adjusted if transmission housing, differential bearings, differential housing/cover, adjusting rings or ring gear/pinion have been replaced. Also see table on page 39.9

Work sequence

CAUTION

Differential bearing outer races must be fully seated in adjusting rings

— install differential with ring gear on driver's side
— install dial indicator (3 mm range) with extension VW 382/9 into bar VW 382/7
— zero dial indicator with 1 mm preload
— turn in adjusting ring on ring gear side with VW 381/15 until upper edge is approximately 0.20 mm below surface of housing
— turn in adjusting ring on other side with VW 381/15 until differential is free of play and without preload
— attach VW 381/5a to ring gear side and lock with hex nut
— turn transmission housing so differential is at top and attach bridge VW 381/8 on dowel pins

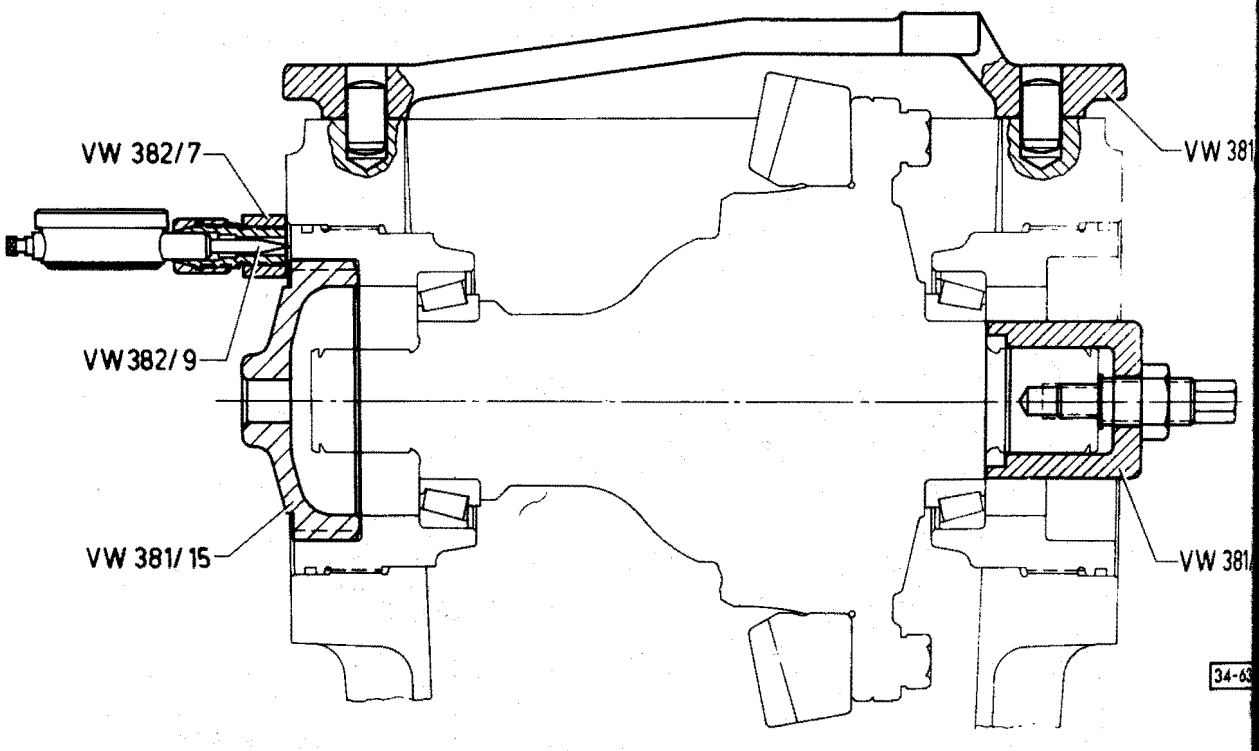



– attach torque gauge US 1064
– turn differential in both directions while oiling bearings with transmission oil
– increase bearing preload slowly by turning in adjusting ring on side opposite ring gear with VW 381/15 while turning differential with US 1064 until specified turning torque is reached

Turning torque

New bearings	Used bearings*
300–350 Ncm (27–31 in. lb.)	30–70 Ncm (2.7–6.2 in. lb.)

*after running at least 30 miles

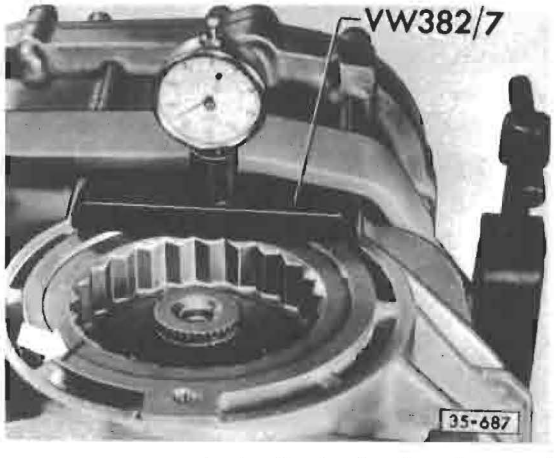

– measure screw-in depth of adjusting rings and note readings S_1 and S_2
– mark adjusting rings and do not interchange

Note

If ring gear is being readjusted, check pinion adjustment, see page 39.10

Backlash, adjusting

Work sequence

– install pinion with shim S_3
– install differential with adjusting rings on correct sides
– attach bridge VW 381/8
– turn in adjusting rings while turning differential until measured screw-in depths S_1 and S_2 have been reached

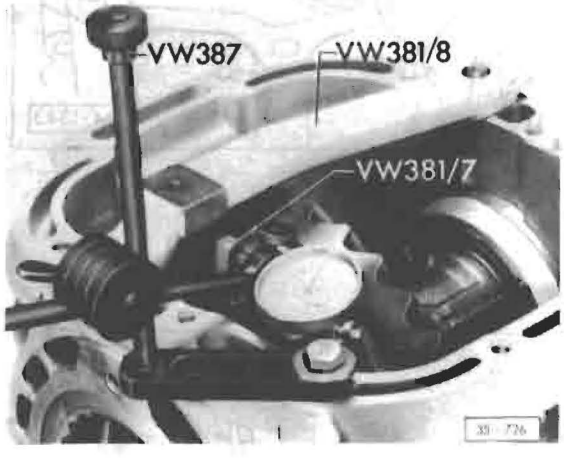

– attach measuring tools as shown

4–speed 091



– lock pinion with bar VW 381/11

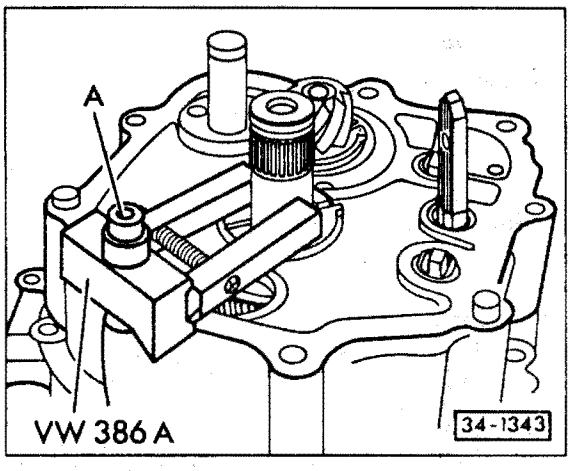

– lock pinion with clamp
  • A = bolt M8 x 125

5–speed 094

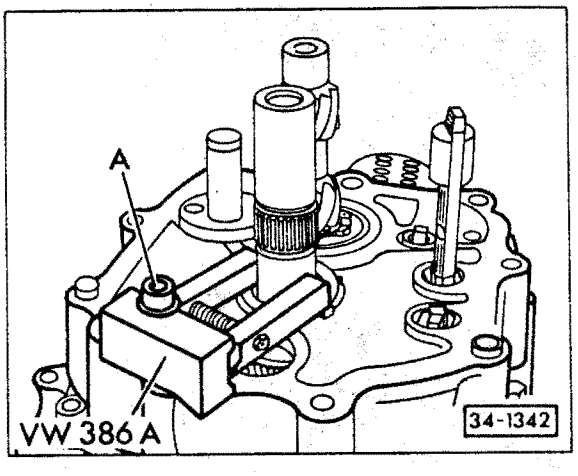

– lock pinion with clamp
  • A = bolt M8 x 125
— turn ring gear to stop and set dial indicator to zero
— turn ring gear in opposite direction and read backlash
— check backlash each 1/4 turn
  • backlash should be 0.15–0.25 mm (0.006–0.010 in.)

Note

Individual readings must not differ from one another by more than 0.05 mm

CAUTION

If backlash readings vary by more than 0.06 mm from one another, there is something wrong with installation of ring gear or gear set itself. Check all assembling operations and replace gear set if necessary

— to adjust backlash, proceed as follows
— turn adjusting ring on side opposite ring gear **out**
— turn adjusting ring on ring gear side **in** by same amount
— continue adjusting until backlash is 0.15–0.25 mm (0.006–0.010 in.)

Note

Keep within tolerance of ± 0.01 mm

Backlash, checking

— check backlash each 1/4 turn
  • backlash should be 0.15–0.25 mm (0.006–0.010 in.)

Note

Individual readings must not differ by more than 0.05 mm

39 Differential – Manual Transmission

Note

Clamp differential gear into a vise before disassembling (Fig. 1).

CAUTION

Bearing inner and outer races are matched and must not be interchanged. Replace both bearings at the same time. Ring gear and pinion must be adjusted after replacing differential housing, cover and bearings. Side gear end play must be adjusted if differential housing, cover or side gears have been replaced.

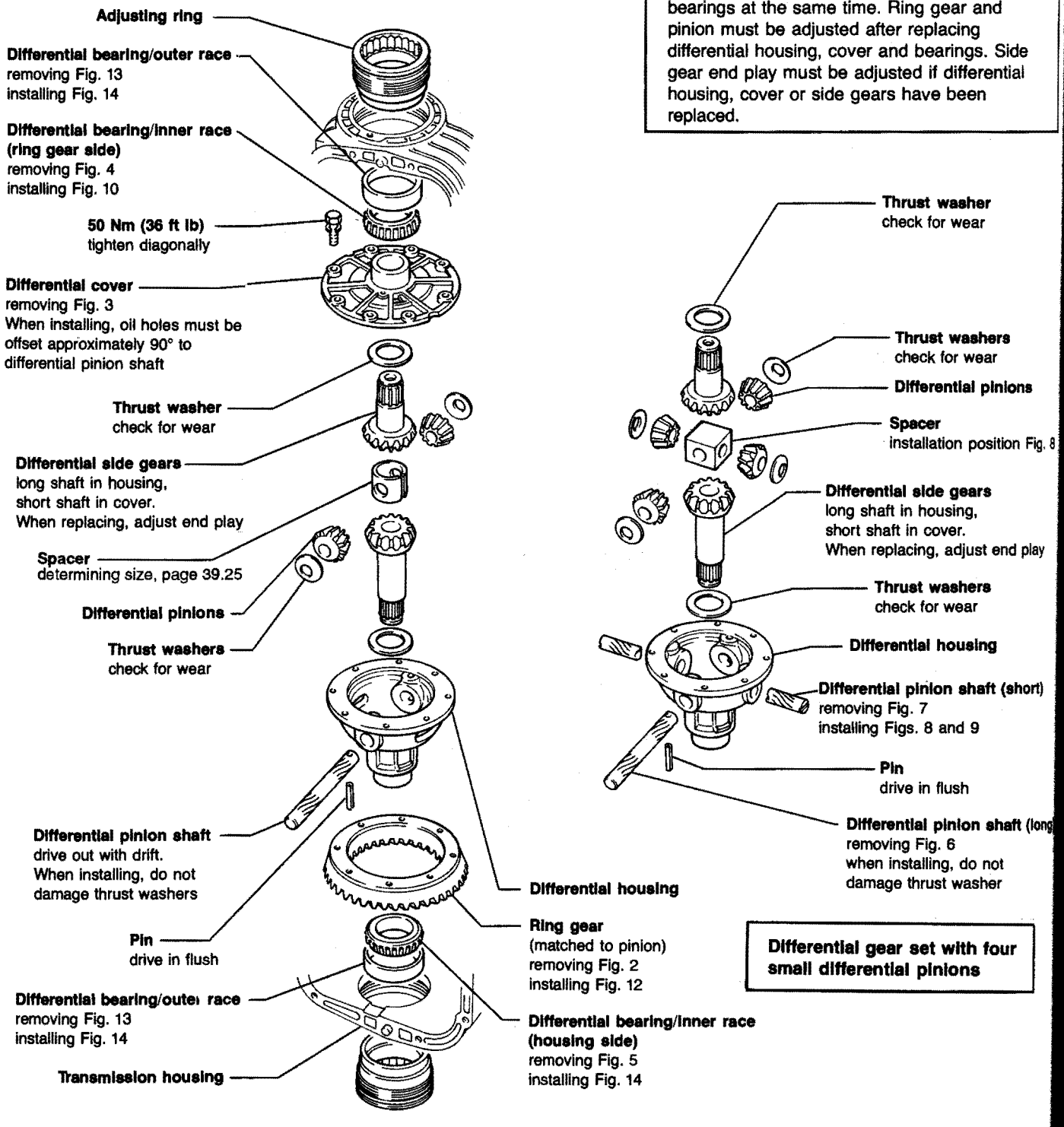

Differential gear set with four small differential pinions

Differential gear set with two small differential pinions

39-1133

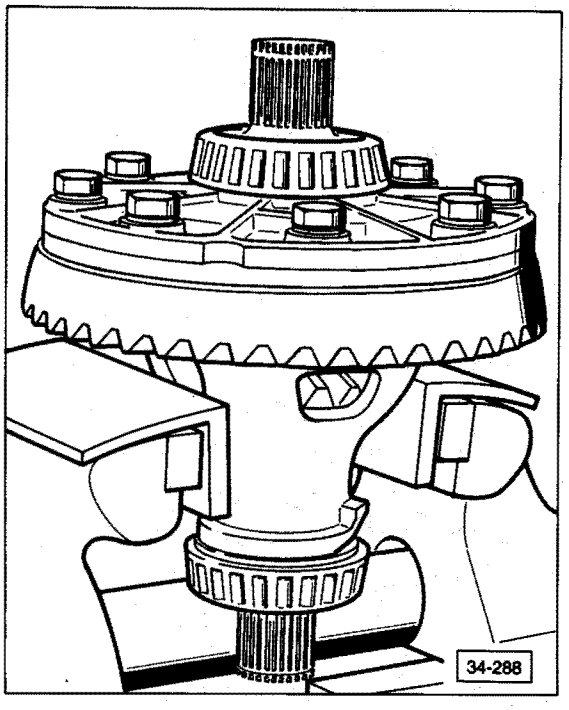

Fig. 1 Differential housing, disassembling

— use jaw covers on vise

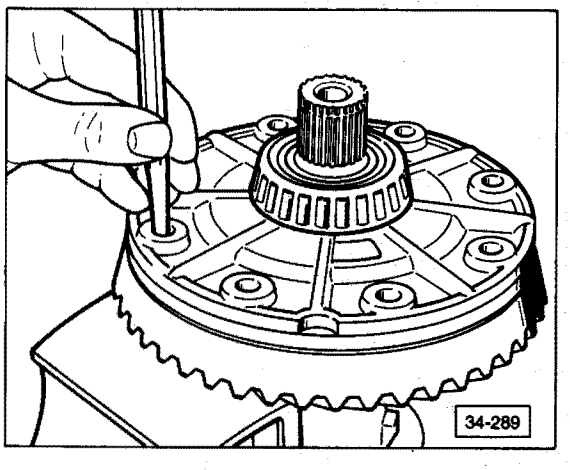

Fig. 2 Ring gear, removing

— use drift to separate ring gear from housing

CAUTION

Do not damage threads in ring gear.

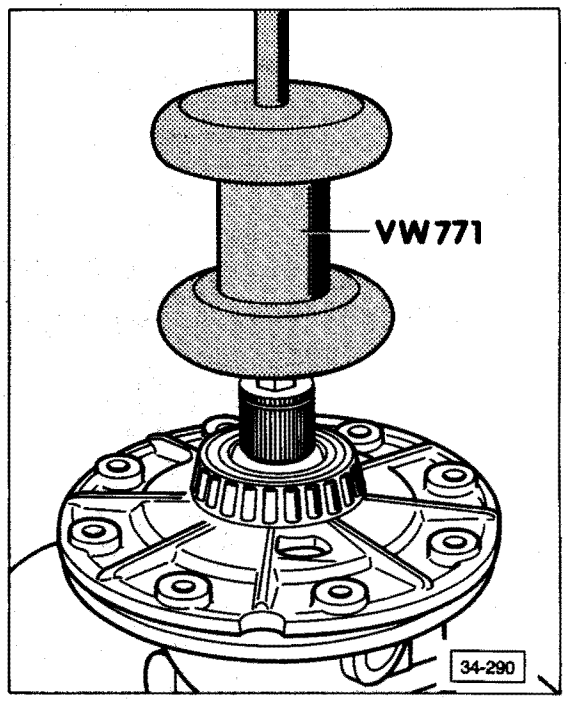

Fig. 3 Differential cover, removing

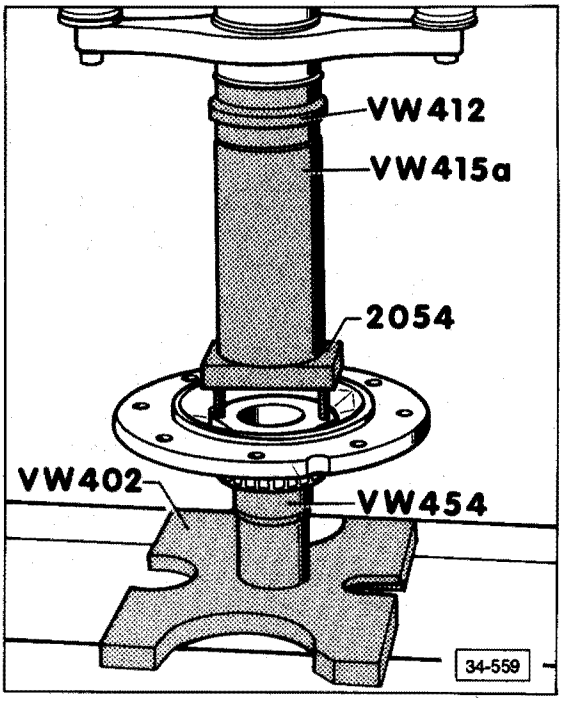

Fig. 4 Differential bearing/inner race (ring gear side), removing

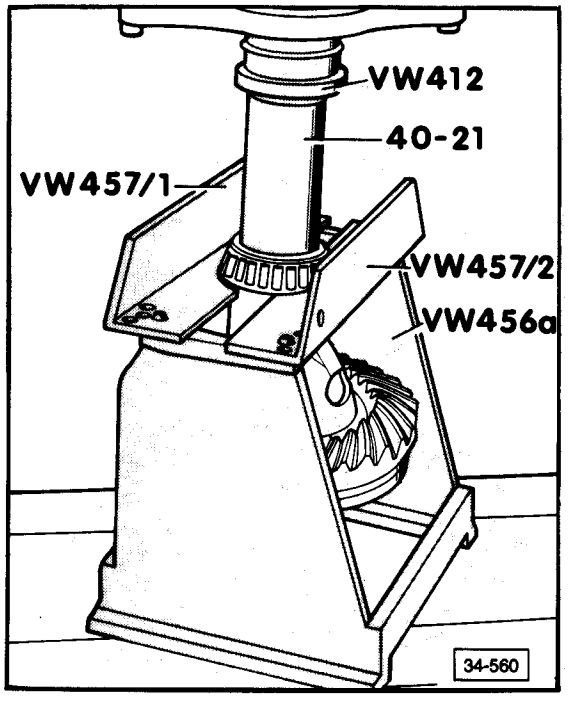

Fig. 5 Differential bearing/inner race (housing side), removing

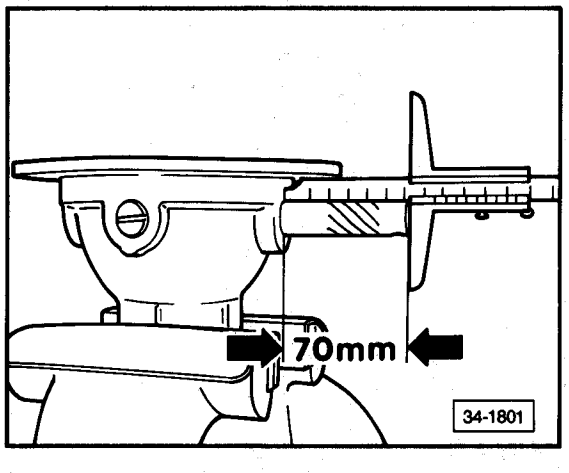

Fig. 6 Differential pinion shaft (long), removing

— drive out axle until it projects 70 mm on one side

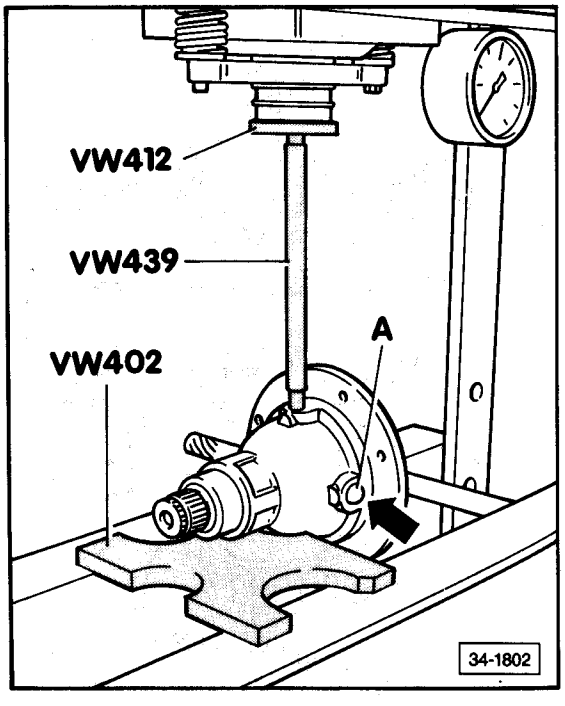

Fig. 7 Differential pinion shafts (short), removing

— insert greased ball **A** (17 mm diameter) into bore hole of spacer up to stop and secure
— press on shaft

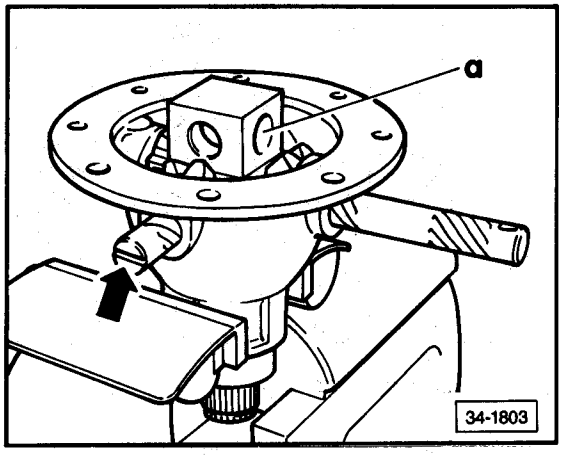

Fig. 8 Differential pinion shafts, installing

— align short shafts with slots parallel to flange
— drive in all shafts until thrust washers and differential pinions can be positioned
— install spacer with large bore hole **a** facing long axle
— drive in long axle until it matches pin hole

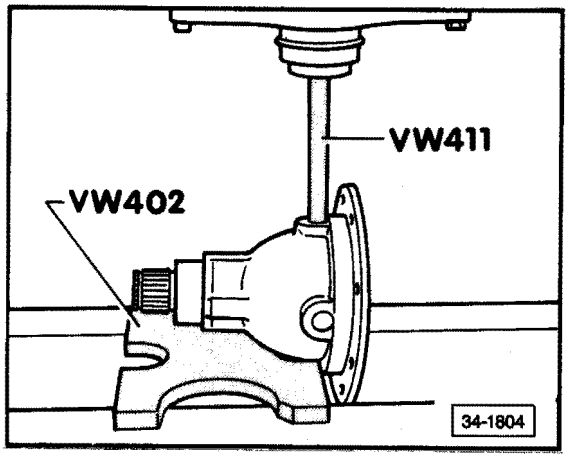

Fig. 9 Shafts, installing

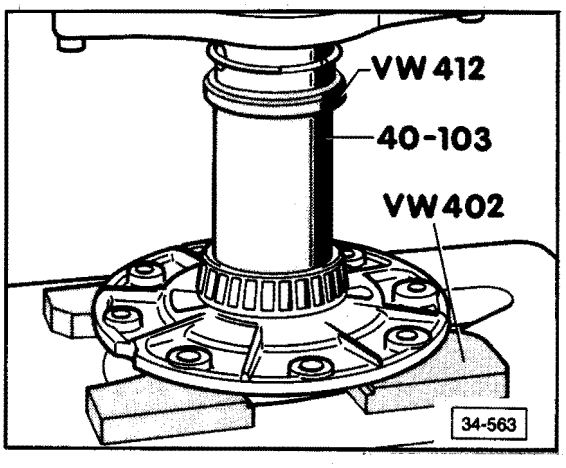

Fig. 10 Differential bearing/inner race (ring gear side), installing

— heat to approximately 100°C (212°F) and press on

CAUTION

Clean contact surfaces are essential to ensure that ring gear, differential housing and cover fit properly. Remove all burrs and pressure marks with oil stone.

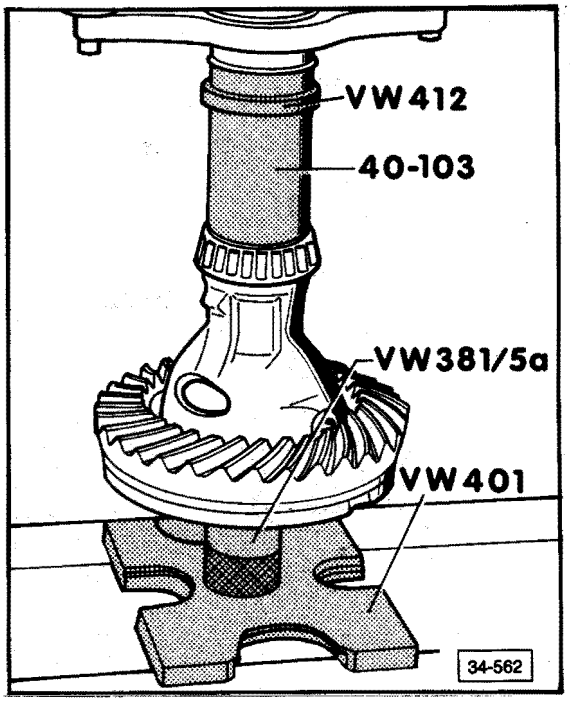

Fig. 11 Differential bearing/inner race (housing side), installing

— heat to approximately 100°C (212°F) and press on

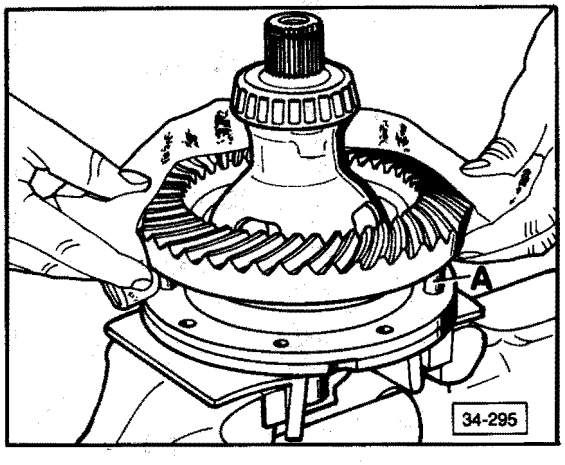

Fig. 12 Ring gear, installing

— heat ring gear to approximately 100°C (212°F) and install

A = centering pins (fabricate)

Note

If ring gear/pinion are replaced, readjustment is necessary.

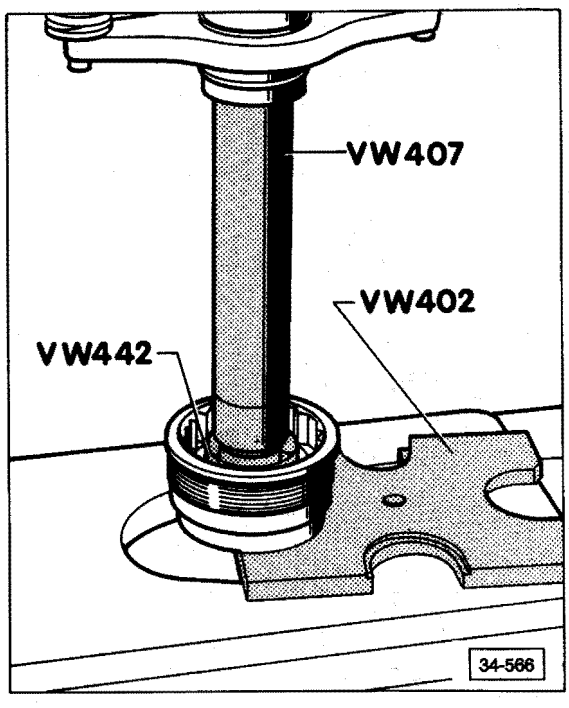

Fig. 13 Differential bearing/outer race, removing

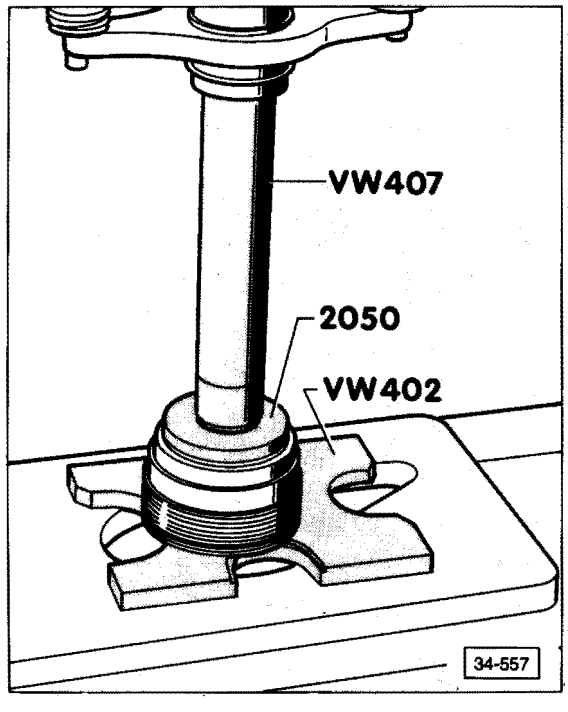

Fig. 14 Differential bearing/outer race, installing

— press race in until seated

Note

Clamp differential gear into a vise before disassembling (Fig. 1).

CAUTION

Bearing inner and outer races are matched and must not be interchanged. Replace both bearings at the same time. Ring gear and pinion must be adjusted after replacing differential housing, cover or bearings. Side gear end play must be adjusted if differential housing, cover or side gears have been replaced.

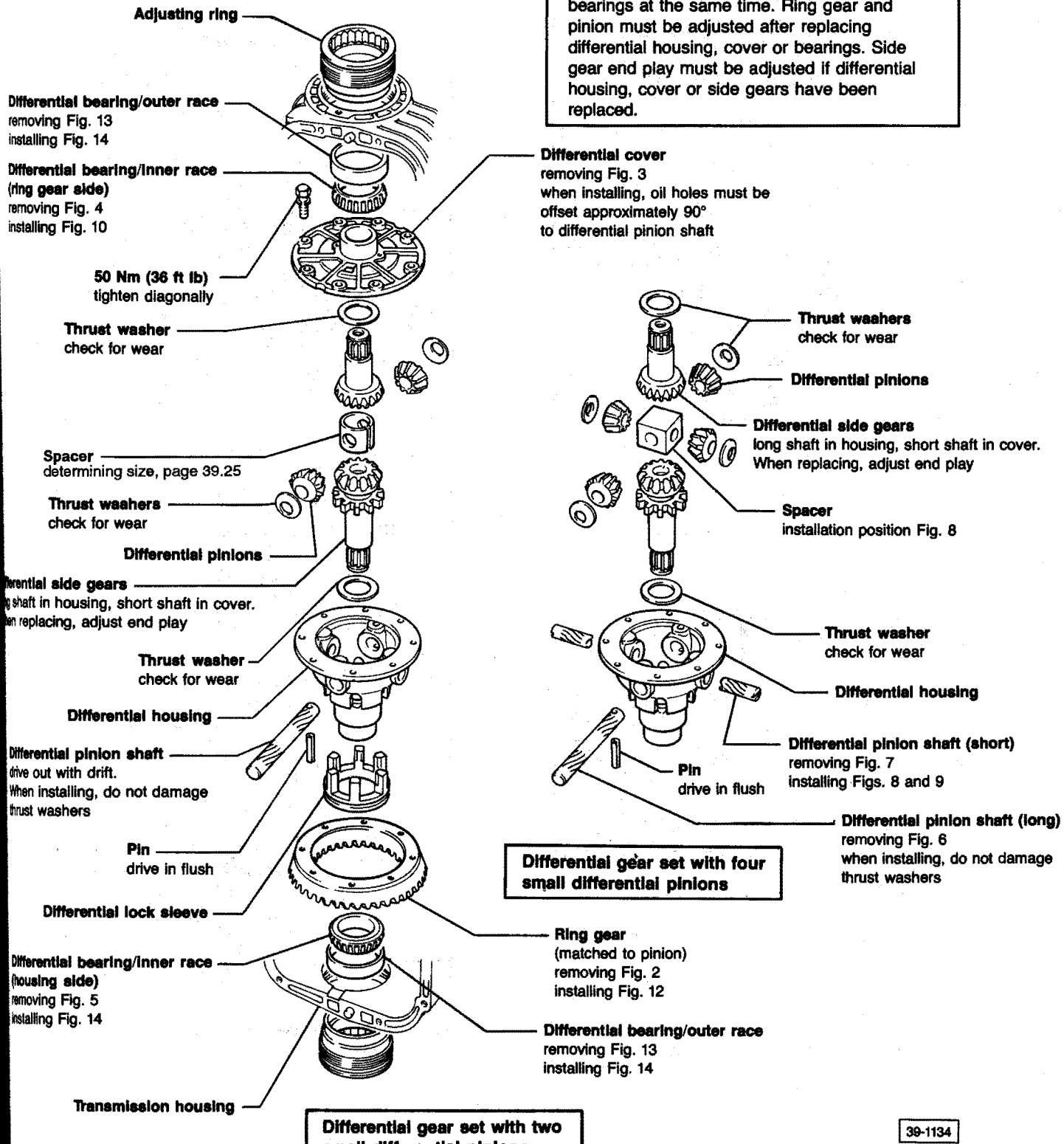

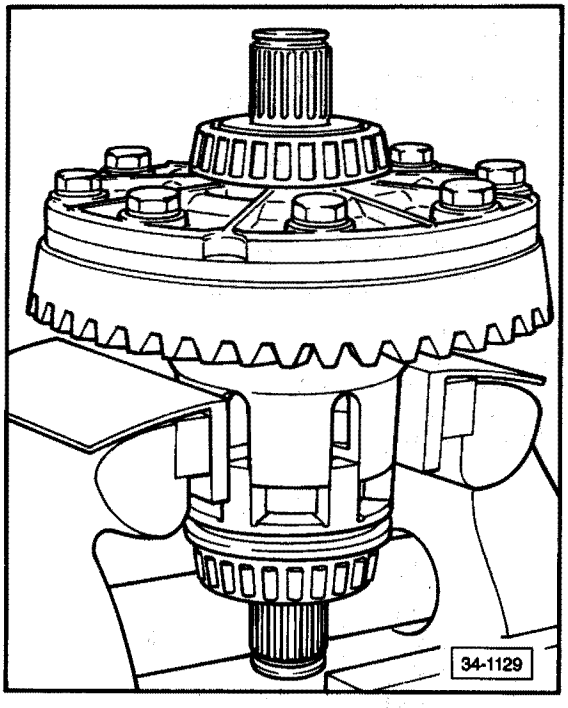

Fig. 1 Differential housing, disassembling

— use jaw covers on vise

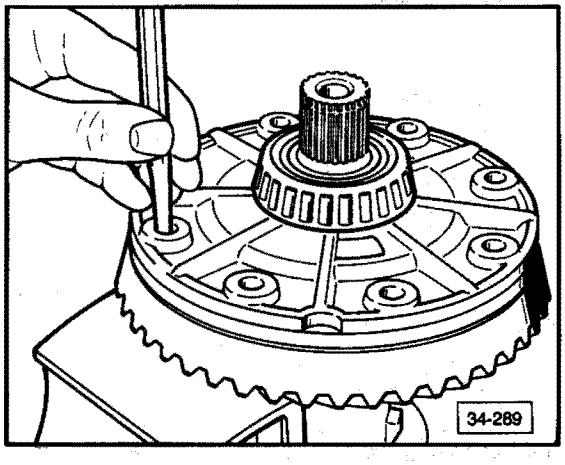

Fig. 2 Ring gear, removing

— use drift to separate ring gear from housing

CAUTION

Do not damage threads in ring gear.

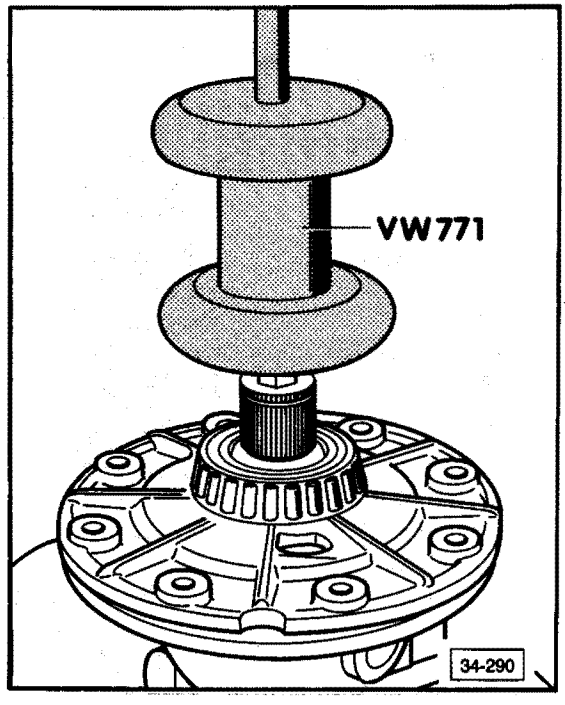

Fig. 3 Differential cover, removing

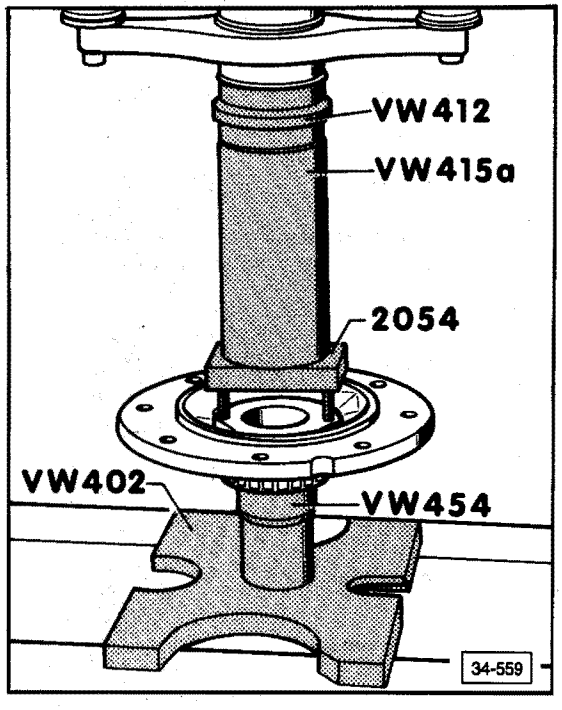

Fig. 4 Differential bearing/inner race (ring gear side), removing

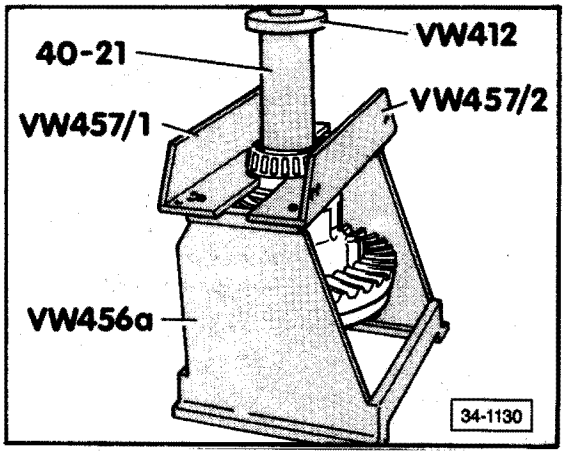

Fig. 5 Differential bearing/inner race (housing side), removing

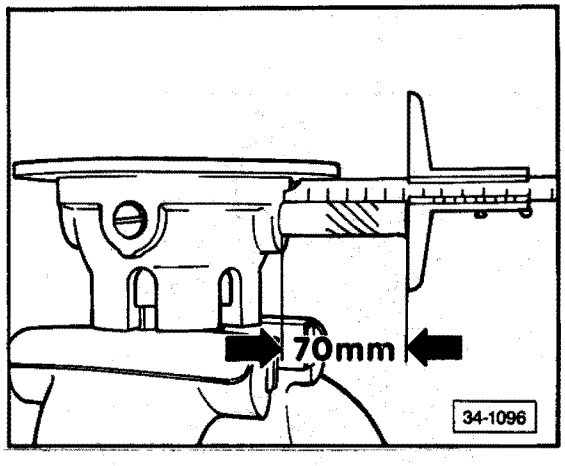

Fig. 6 Differential pinion shaft (long), removing

— drive out shaft until it projects 70 mm on one side

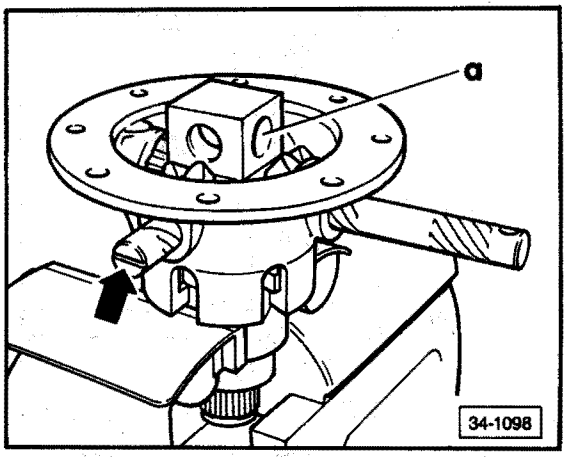

Fig. 7 Differential pinion shafts (short), removing

— insert greased ball **a** (17 mm diameter) into bore hose of spacer up to stop and secure
— press on axle

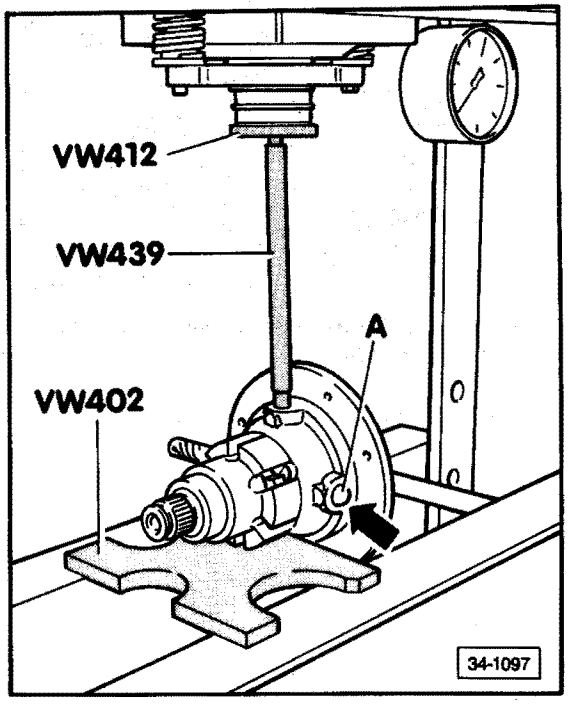

Fig. 8 Differential pinion shafts, installing

— align short shafts with slots parallel to flange
— drive in all shafts until thrust washers and differential pinions can be positioned
— install spacer with large bore hole **A** facing long shaft
— drive in long shaft until it matches pin hole

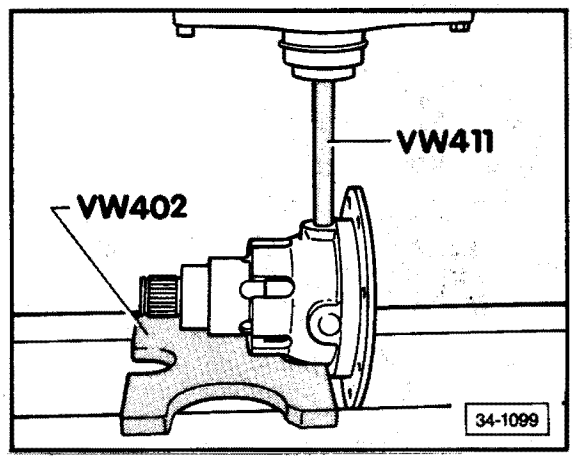

Fig. 9 Shafts, installing

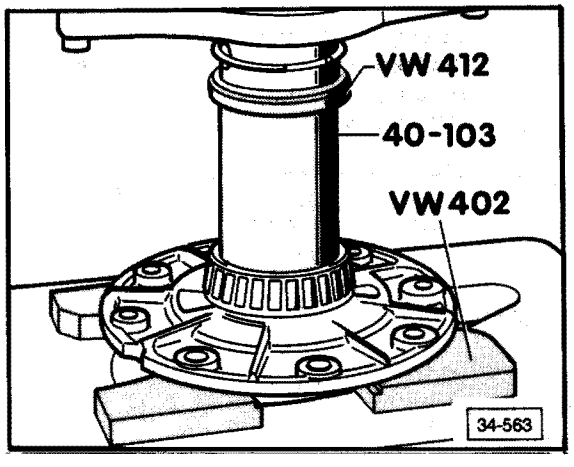

Fig. 10 Differential bearing/inner race (ring gear side), installing

— heat to approximately 100°C (212°F) and press on

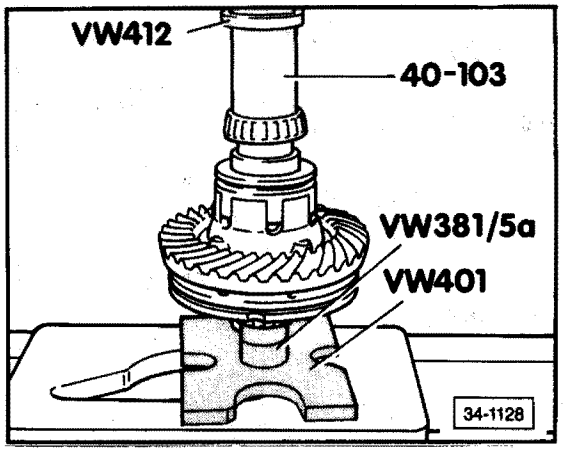

Fig. 11 Differential bearing/inner race (housing side), installing

— heat to approximately 100°C (212°F) and press on

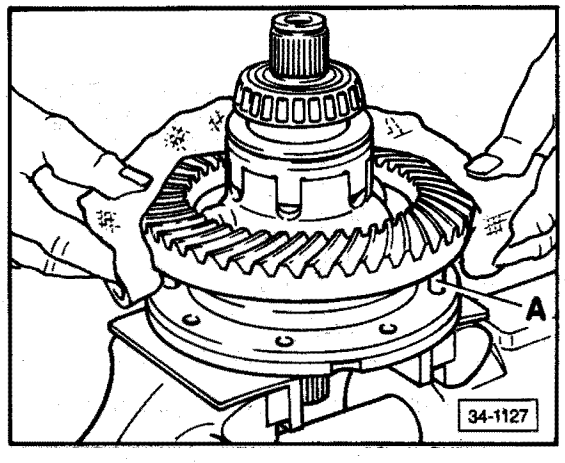

Fig. 12 Ring gear, installing

CAUTION

Clean contact surfaces are essential to ensure that ring gear, differential housing and cover fit properly. Remove all burrs and pressure marks with oil stone.

— heat ring gear to approximately 100°C (212°F) and install

A = centering pins (fabricate)

Note

If ring gear/pinion are replaced, readjustment is necessary.

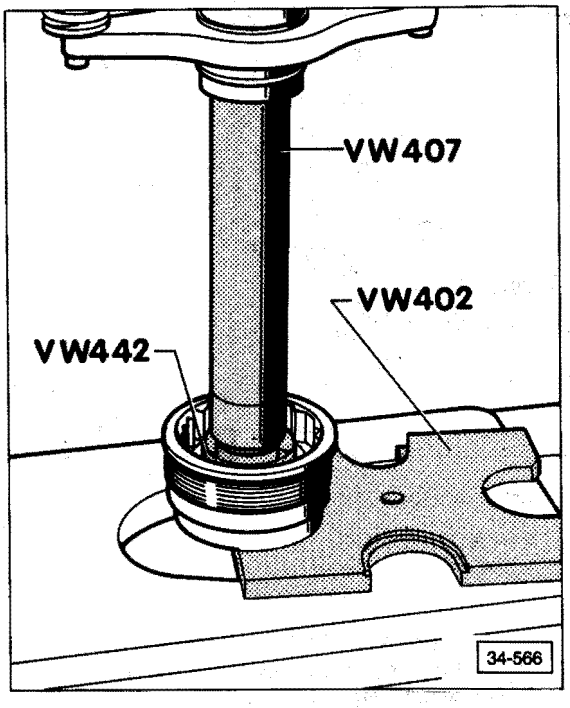

Fig. 13 Differential bearing/outer race, removing

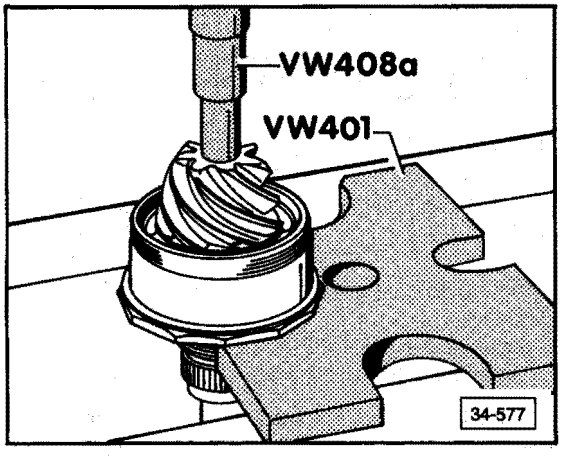

Fig. 14 Differential bearing/outer race, installing

— press race in until seated

Differential pinion/side gears, adjusting end play

Note

The spacer sleeve ensures adequate backlash between side gears and differential pinion gears even when there is axial pressure on the side gears. If differential housing, cover or spacer sleeve is replaced, the size of the spacer sleeve must be redetermined.

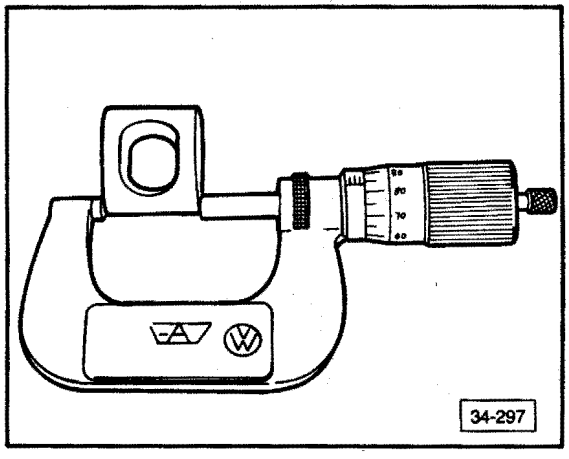

— measure shortest spacer sleeve, Part No. 002 517 241, with a micrometer
— mark dimension on sleeve with electric marker or similar device
— this sleeve should always be used as a measuring device

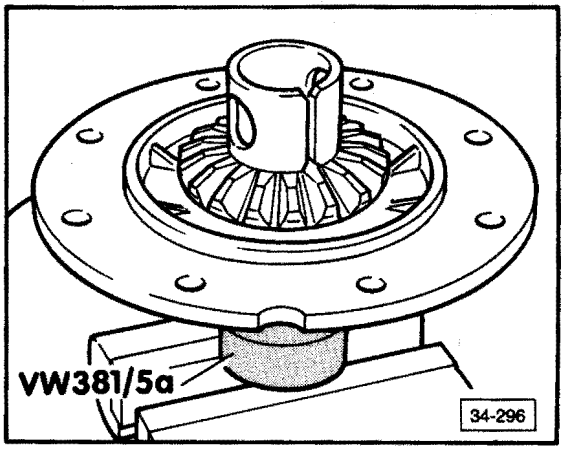

— place side gear (with short shaft) and both thrust washers in cover
— attach clamping sleeve VW 381/5a and clamp gear tightly against cover
— place side gear (with long shaft) in differential housing
— insert measuring sleeve, bolt housing and cover together with four M8 x 20 bolts

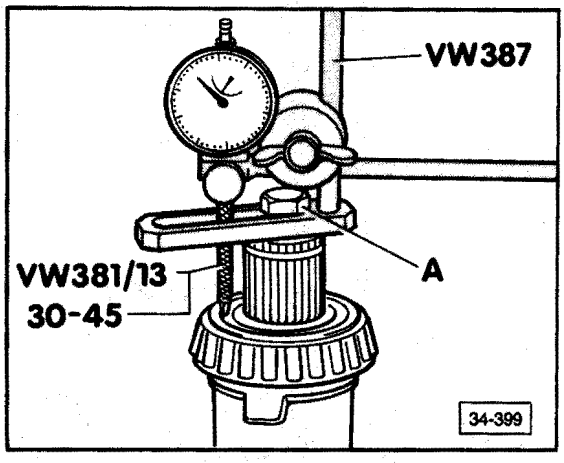

— install dial indicator with 3 mm range

A = M10 x 25 bolt
30-45 = 76 mm long
VW 381/13 = 52 mm long

— zero dial indicator with 2 mm preload
— find end play by moving side gear up and down
— add measured play and length of measuring sleeve together
— find this figure in the table below under **x range** and select proper sleeve

x range	Sleeve length mm	Part No.
31.87-31.95	31.84	002 517 241
31.96-32.04	31.93	002 517 242
32.05-32.13	32.02	002 517 243
32.14-32.22	32.11	002 517 244
32.23-32.33	32.20	002 517 245

— disassemble differential and remove measuring sleeve
— install sleeve selected from table and assemble differential **without** differential pinion shaft

— recheck play, play should be 0.03-0.17 mm

Ring gear/pinion, adjusting

Pinion removed

Note

Ring gear/pinion must **always** be replaced as a matched set, never individually.

Adjustment of ring gear is required if any of the following are replaced:

Adjusting rings
Transmission housing
Differential cover
Differential bearings
Differential housing
Ring gear/pinion

Screw-in depth, determining

CAUTION

Differential bearing outer races must be fully seated in adjusting rings

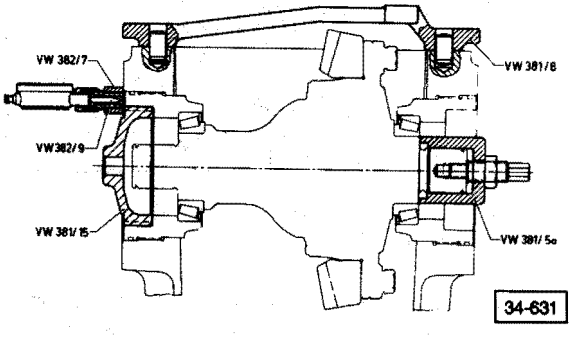

— install differential with ring gear into housing (ring gear lies on left side)
— install dial indicator (3 mm range) with extension VW 382/9 (18 mm long) into bar VW 382/7
— zero gauge with 3 mm preload
— turn in adjusting ring on ring gear side with VW 381/14 until upper edge is approximately 0.20 mm below surface of housing
— turn in adjusting ring on other side with VW 381/15 until differential is free of play and without preload
— attach VW 381/5a to ring gear side and lock with hex nut
— turn transmission housing until differential is at top and attach bridge VW 381/8 on dowel pins

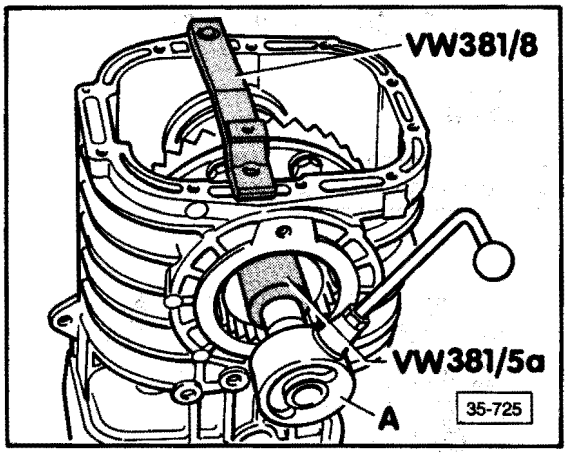

A = Commercial torque wrench, 0-600 Ncm (0-54 in. lb)

— insert torque wrench with socket wrench (19 mm)
— turn differential in both directions while oiling bearings with transmission oil
— increase bearing preload slowly by turning in adjusting ring on side opposite ring gear with VW 381/15 while turning differential until specified turning torque is reached

Turning torque

New bearings	Used bearings*
300-350 Ncm (27-31 in. lb)	30-70 Ncm (2.7-6.2 in. lb)

*after running at least 30 miles

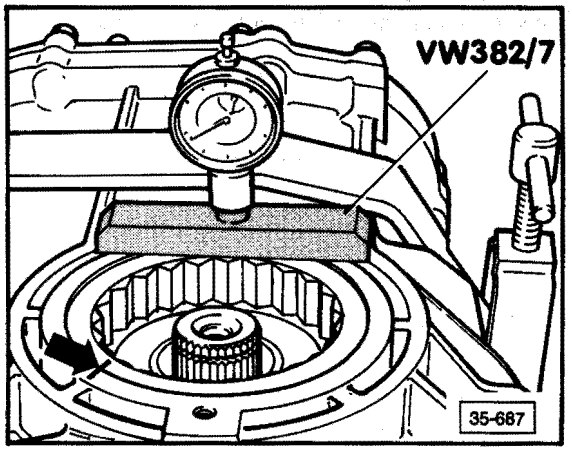

— measure screw-in depth of adjusting rings and note readings **S1** and **S2**
— mark adjusting rings and do not interchange (**arrow**)

Note
If ring gear is being readjusted, check pinion adjustment, see page 39.25

Backlash, adjusting

— install pinion with shim **S3**
— install differential with adjusting rings on correct sides
— attach bridge VW 381/8
— turn in adjusting rings while turning differential until measured screw-in depth **S1** and **S2** have been reached

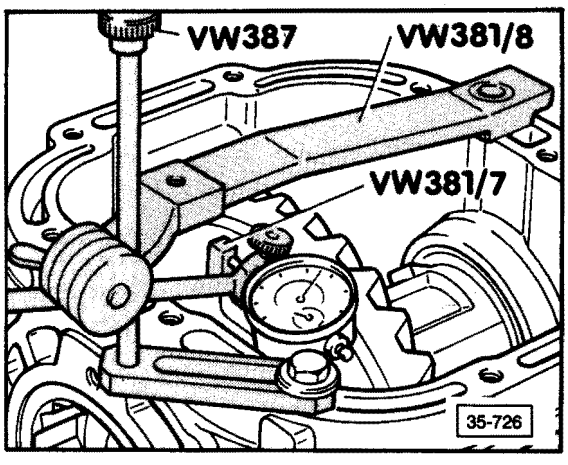

— attach measuring tools as shown
— press in bridge VW 381/7 on two plate screws up to stop

Locking pinion, standard transmission

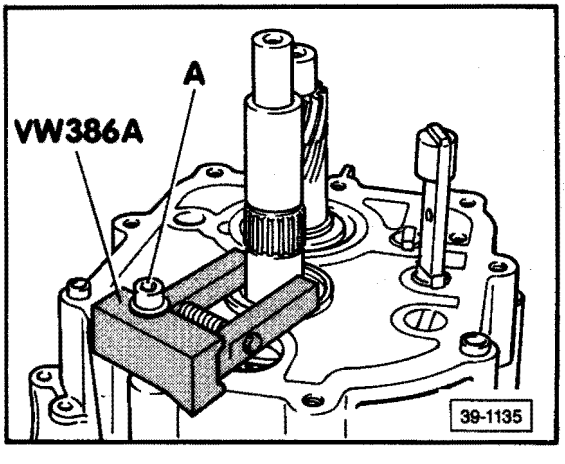

— lock pinion with clamp
A = M8 x 125 bolt

Locking pinion, front final drive

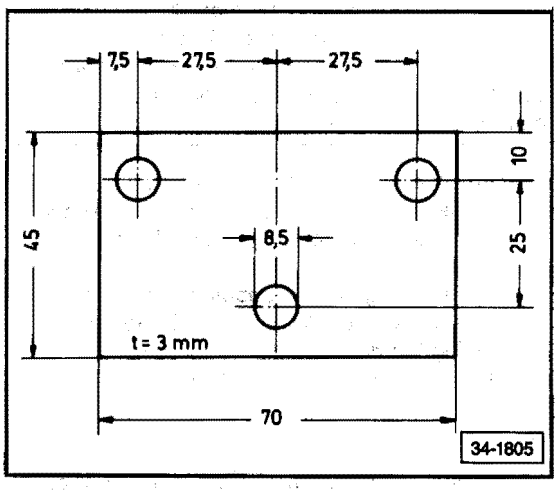

— attach special tool 386/A to final drive housing (manufacture a retaining plate from 3 mm thick sheet metal plate)

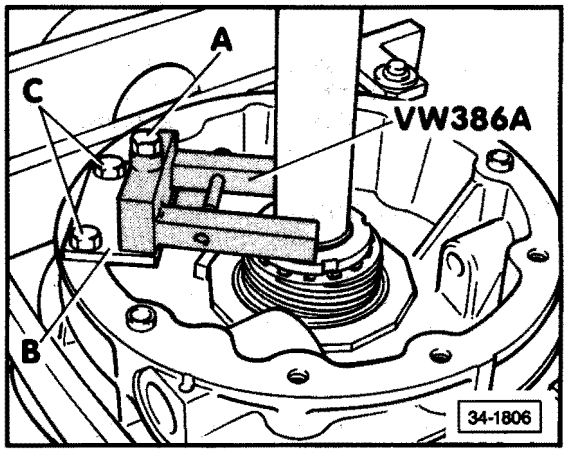

— lock pinion with clamp

A = M8 x 60 bolt with M8 nut

B = Self manufactured retaining plate

C = M8 x 20 bolts

— turn ring gear to stop and set dial indicator to zero
— turn ring gear in opposite direction and read backlash
— note values
— remove bridge
— check backlash 3 more times, 1/4 turn apart each time

CAUTION

If backlash readings vary by more than 0.06 mm from one to another, there is something wrong with installation of ring gear or the gear set itself. Check all assembling operations and replace gear set if necessary.

— to adjust backlash, proceed as follows
— turn **out** adjusting ring on side opposite ring gear
— turn **in** adjusting ring on ring gear side by the same amount
— readjust adjusting ring on opposite side of ring gear one more time after screwing in adjusting ring behing the ring gear
  • keep within tolerance of ± 0.01 mm

Note

S1 + **S2** must always equal **S total** to insure that ring gear preload is not changed.

— continue adjusting until backlash is 0.15-0.25 mm (0.006-0.010 in.)

Note

To obtain the required backlash quickly, the determined backlash minus 0.20 mm (0.008 in.) can be used for the first adjustment of the adjusting rings.

Backlash, checking

— check backlash each 1/4 turn
  • backlash should be 0.15-0.25 mm (0.006-0.010 in.)

Note

Individual readings must not differ by more than 0.05 mm.

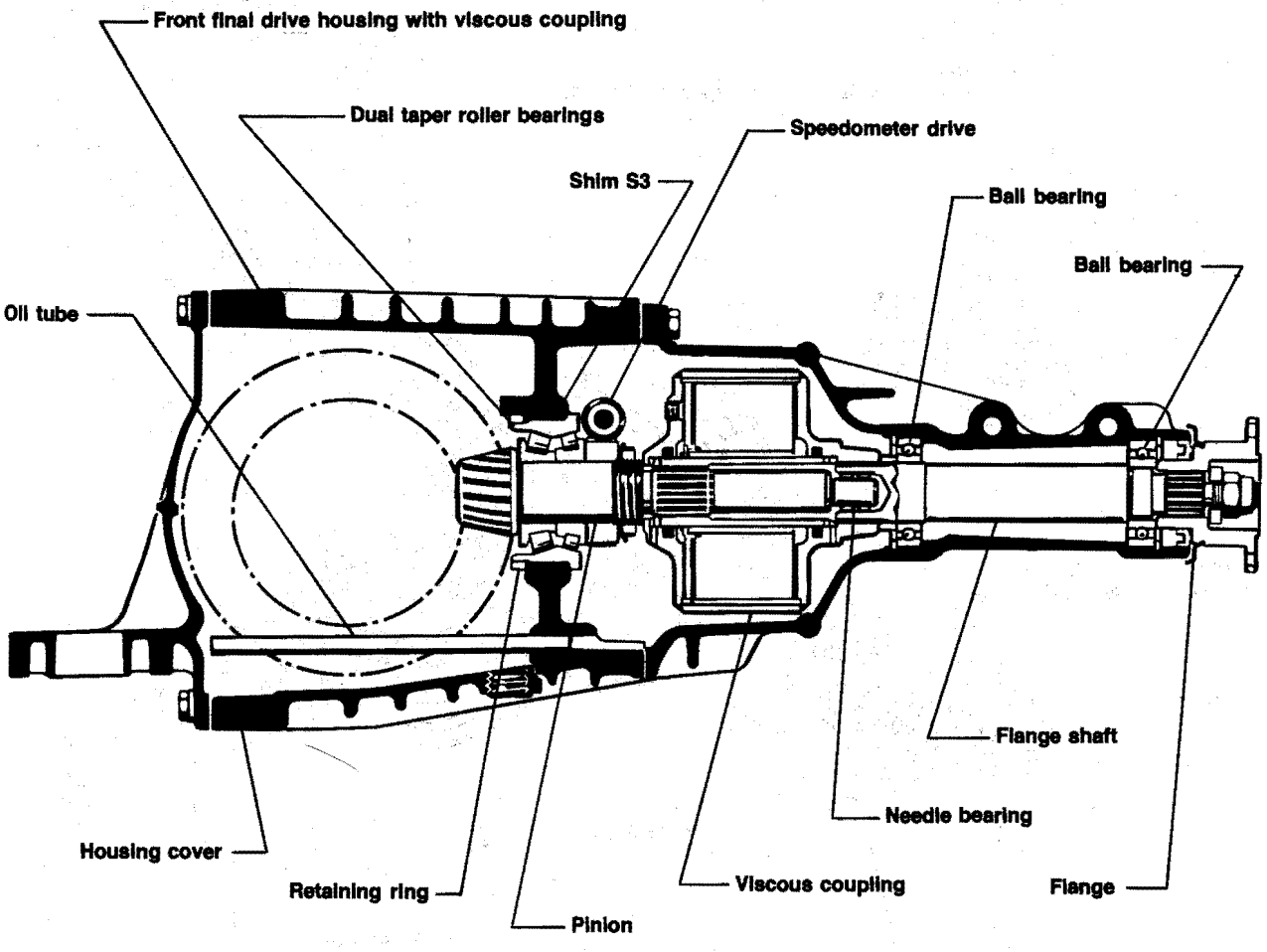
Front final drive housing with viscous coupling
Dual taper roller bearings
Speedometer drive
Shim S3
Ball bearing
Ball bearing
Oil tube
Flange shaft
Needle bearing
Housing cover
Retaining ring
Viscous coupling
Flange
Pinion

39-1168

Note

Before disassembling, mount to repair stand (Fig. 1)
and drain transmission oil.

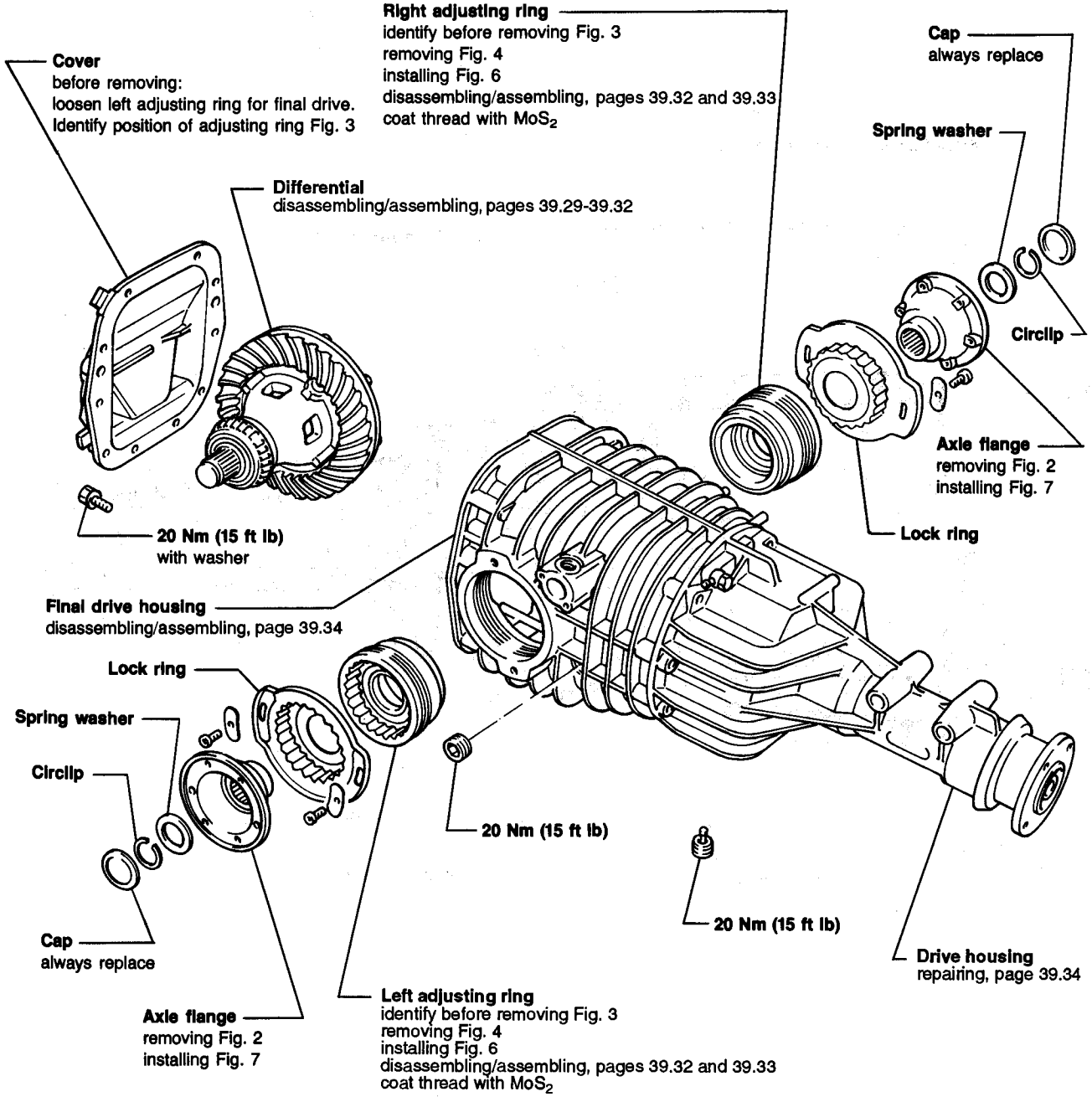

39-1169

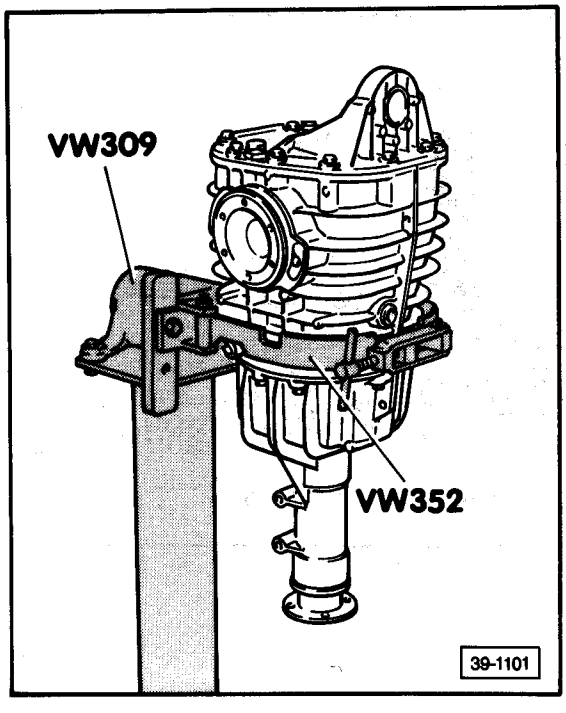

Fig. 1 Final drive, mounting

— clamp final drive in repair stand

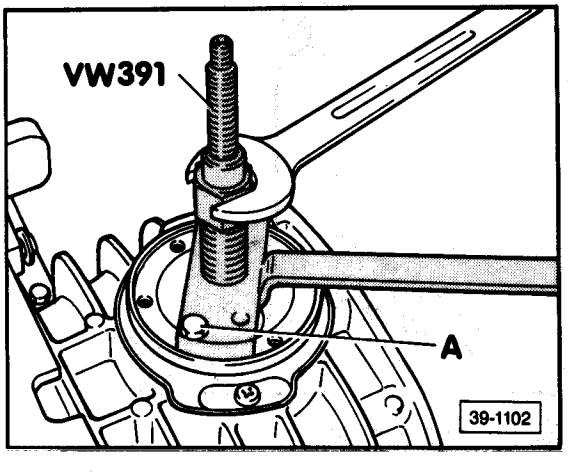

Fig. 2 Axle flange, removing

A = 2 M8 x 30 hex bolts through slots in joint flange

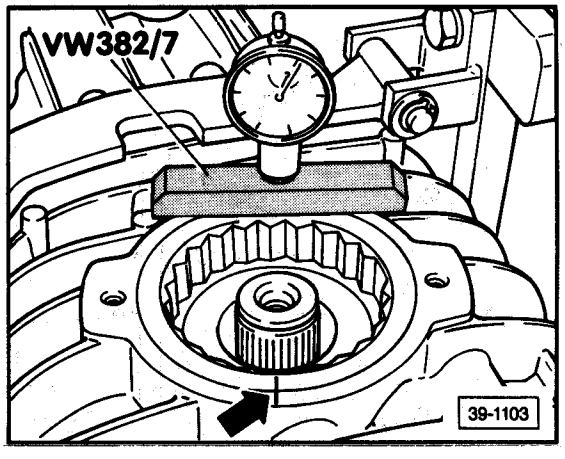

Fig. 3 Adjusting ring position, determining

Note

For differential assemblies which do not need readjustment, the adjusting rings position in relation to the transmission housing must be identified with a marked tool (**arrow**)

— measure screw-in depth with VW 382/7
— note values
— mark left side (ring gear side) with 1 scratch
— mark right side with 2 scratches

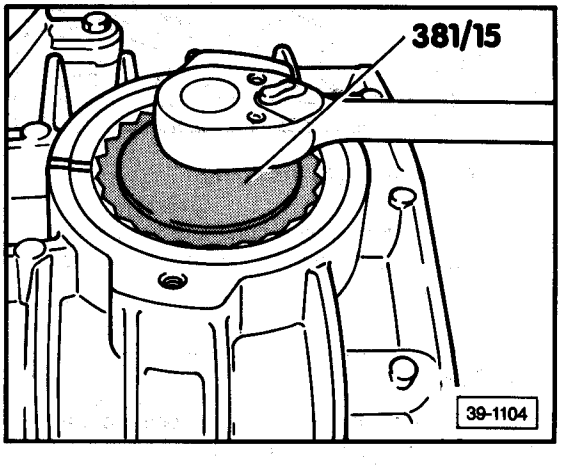

Fig. 4 Adjusting rings, removing

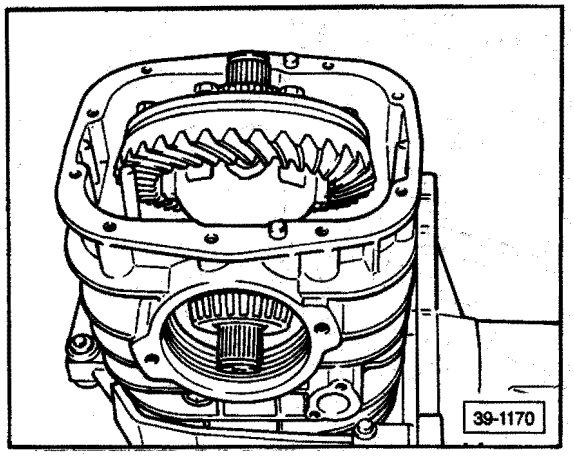

Fig. 5 Differential, removing

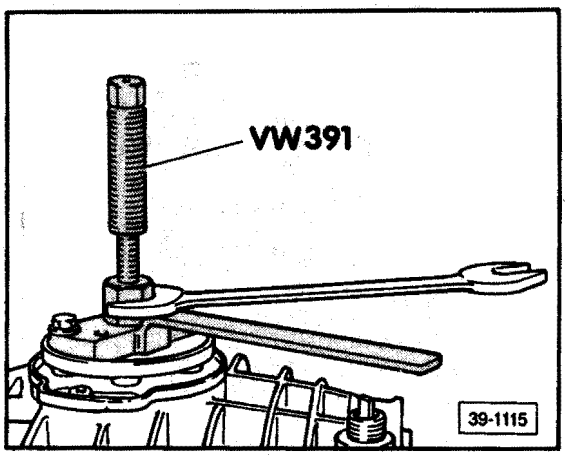

Fig. 7 Axle flange, tightening

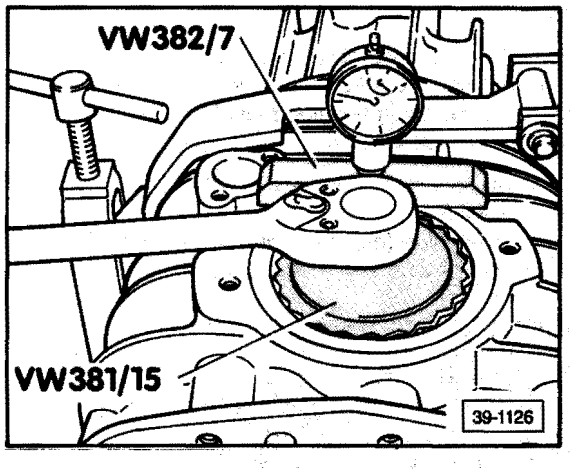

Fig. 6 Adjusting rings, installing

— screw adjustment rings into transmission housing to scratch mark and measure depth

CAUTION

Tighten left adjusting ring first if housing cover is installed and bolted into place.

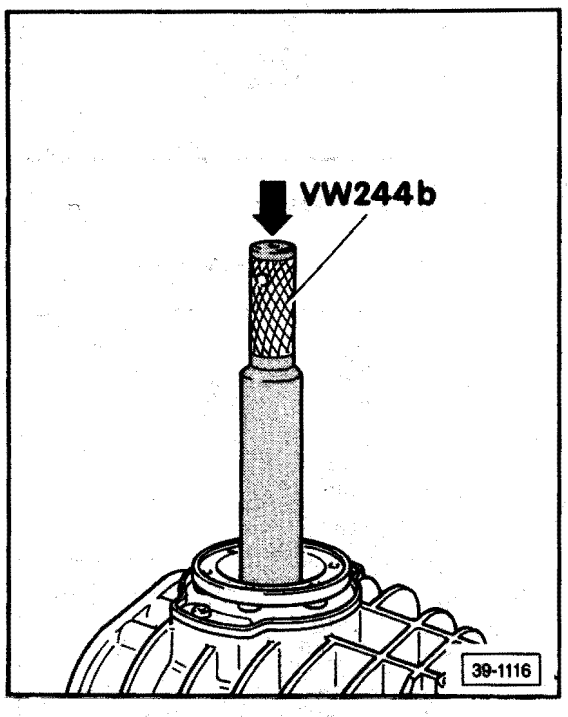

Fig. 8 Circlip, installing

— position spring washer and circlip
— press circlip into groove
— watch for central fit of spring washer

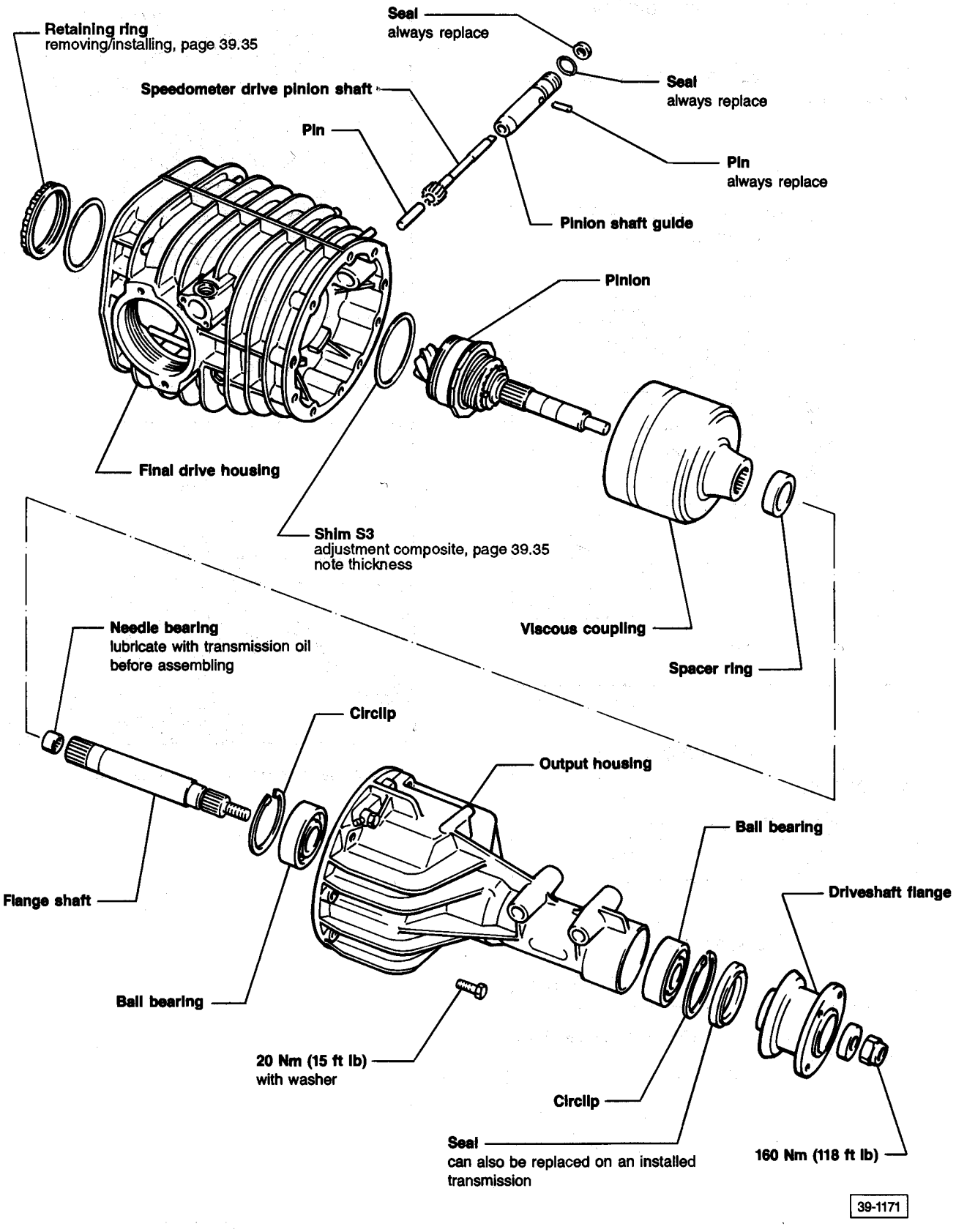
Retaining ring
removing/installing, page 39.35
Seal
always replace
Seal
always replace
Speedometer drive pinion shaft
Pin
Pin
always replace
Pinion shaft guide
Pinion
Final drive housing
Shim S3
adjustment composite, page 39.35
note thickness
Needle bearing
lubricate with transmission oil
before assembling
Viscous coupling
Spacer ring
Circlip
Output housing
Ball bearing
Flange shaft
Driveshaft flange
Ball bearing
20 Nm (15 ft lb)
with washer
Circlip
Seal
can also be replaced on an installed
transmission
160 Nm (118 ft lb)
39-1171

Front final drive, disassembling/ assembling

Final drive housing, disassembling/ assembling

Disassembling

— remove output housing bolts
— remove housing
— remove spacer ring and viscous coupling
— drive out pin for speedometer drive
— pull out speedometer drive

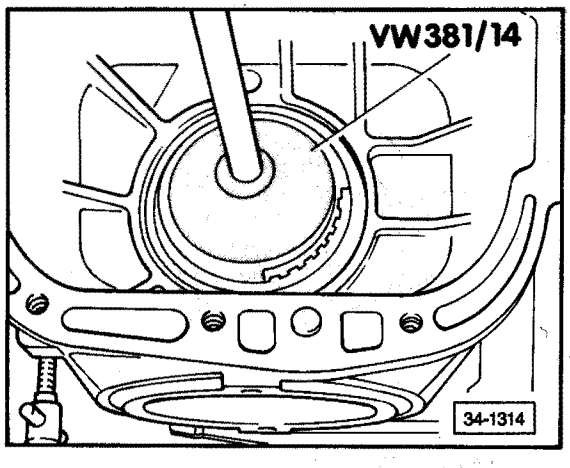

— remove retaining ring

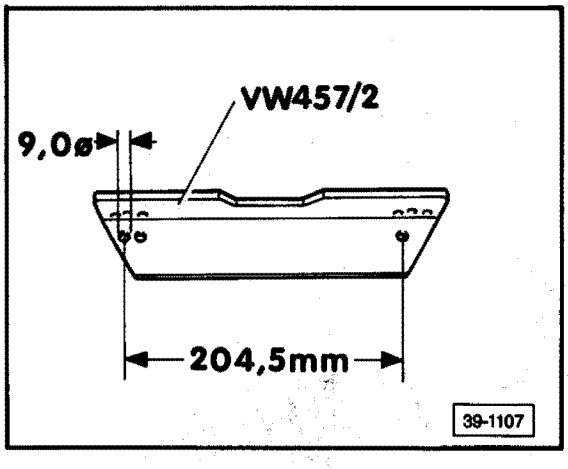

— drill an additional 9.0 mm (0.35 in.) diameter hole in bracket VW 457/2

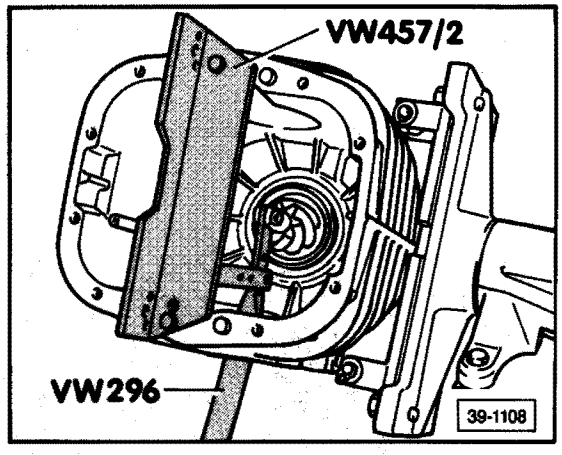

— push out pinion
— fasten VW 457 with two M8 x 20 bolts
— remove shim **S3** and note thickness

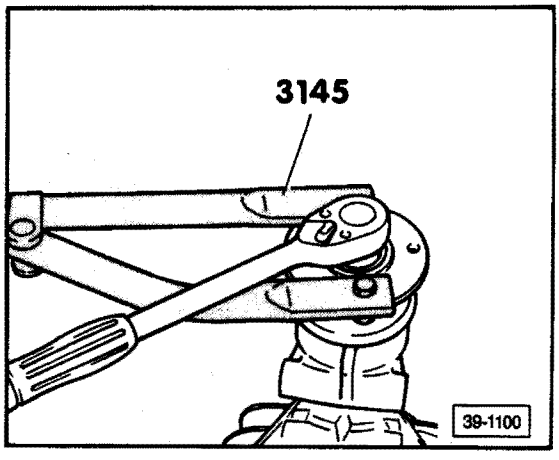

— mount support to flange and remove hex nut

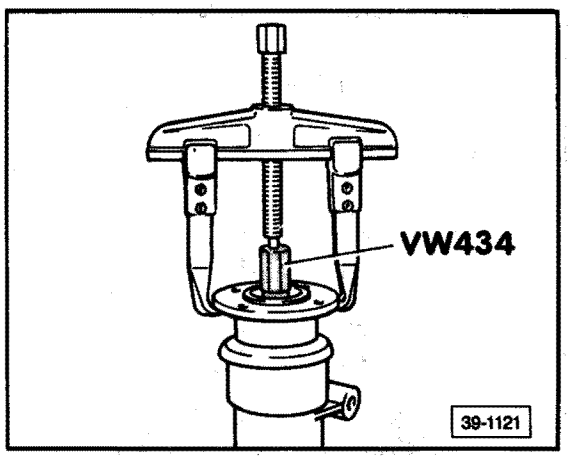

— remove flange, use two-armed extractor if necessary
— remove flange shaft

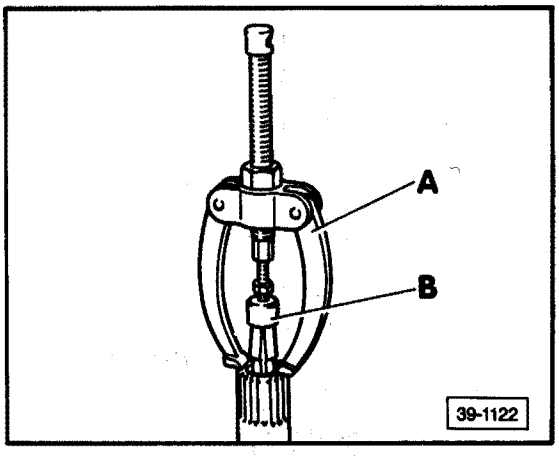

— remove needle bearing from flange shaft

A — Puller, e.g. Kukko 22-1

B — Inner extractor 12 — 14.5 mm, e.g. Kukko 21/1

— pry seal out from cover
— remove seals for outer and inner ball bearing

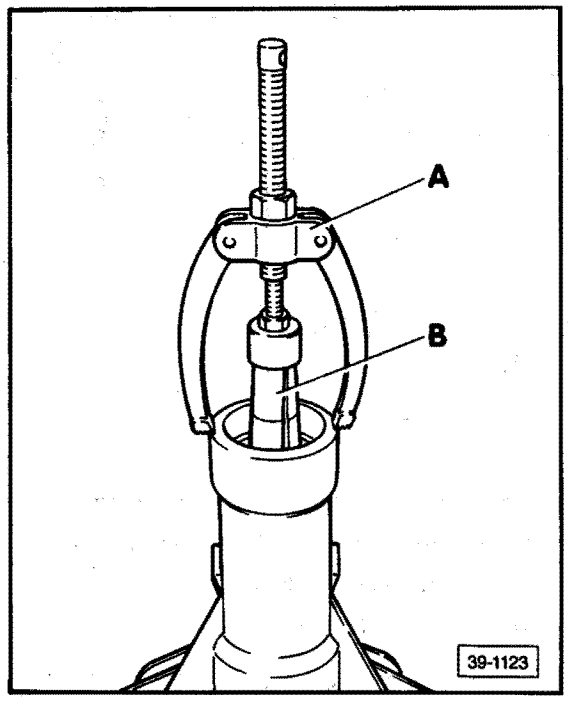

— remove both ball bearings

A — Puller, e.g. 22-2

B — Inner extractor, 30-37 mm, e.g. Kukko 21/5

Assembling

Before assembling:
— position shim **S3**
— place 12 point of dual bearing on opening in housing

— heat pinion housing at dual bearing seat to 40-60°C (130-166°F)
— drive pinion in using a plastic hammer
— position washer and install retaining ring

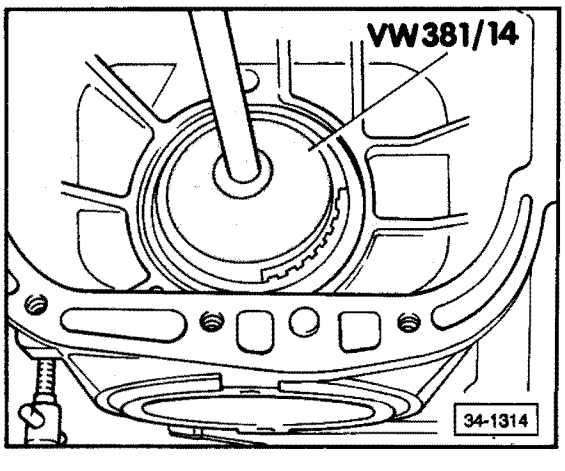

— tighten retaining ring to 225 Nm (166 ft lb)
— loosen retaining ring and retighten to 225 Nm (166 ft lb)

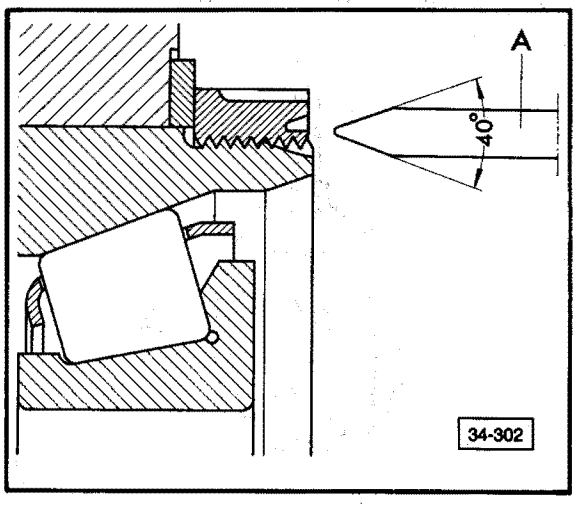

— secure retaining ring by staking in two places

A — fabricated staking tool

— install speedometer drive

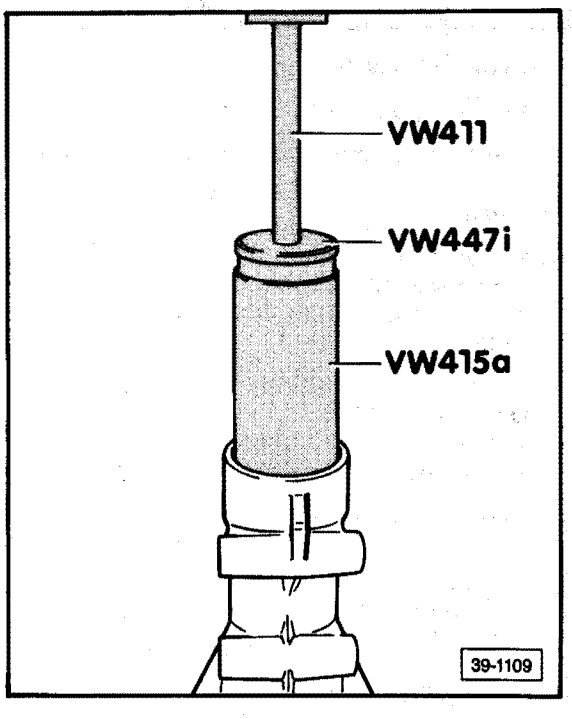

— push both ball bearings up to stop in back cover
— install circlips

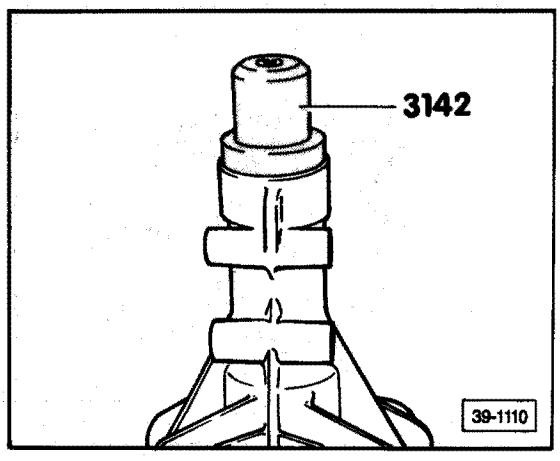

— drive seal in to stop

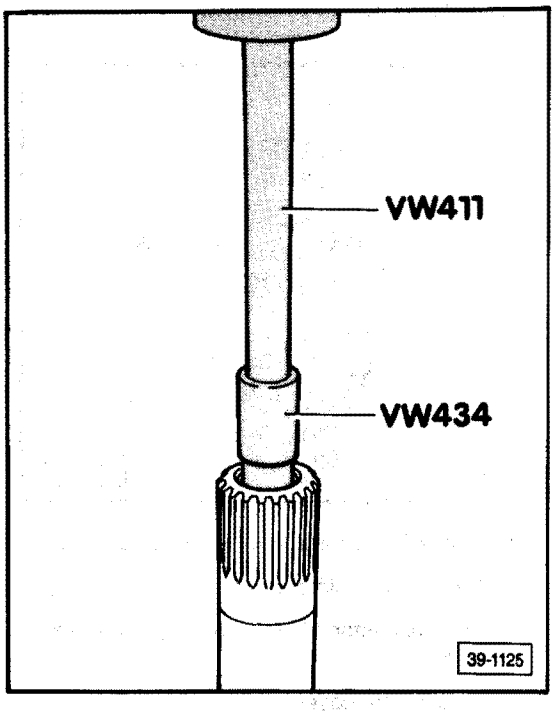

— press in flange shaft needle bearings
— install flange shaft into output housing

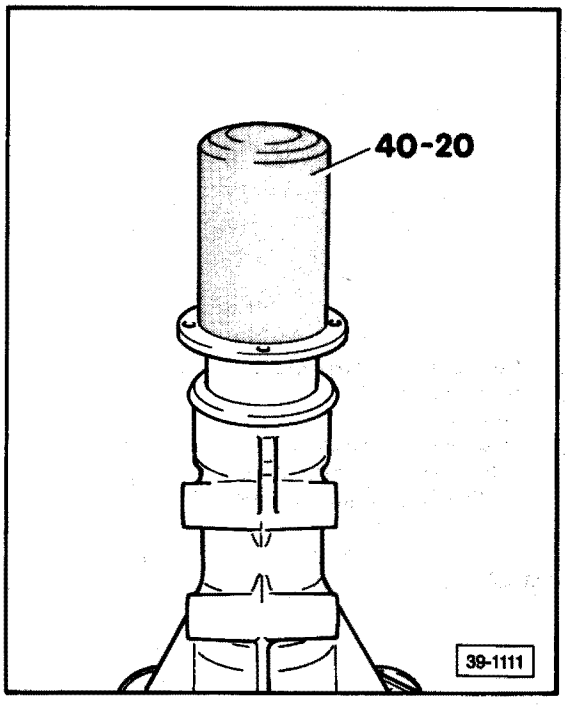

— push on driveshaft flange
— insert washer
— mount puller and tighten hex nut to 160 Nm (118 ft lb)
— position viscous coupling on pinion

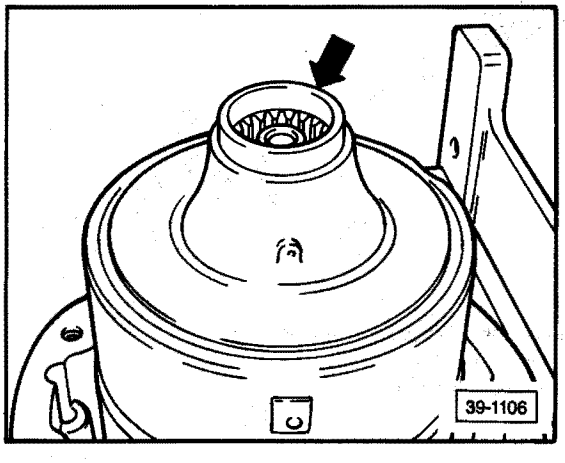

— coat spacer ring with grease and align on viscous coupling
— position output housing and tighten

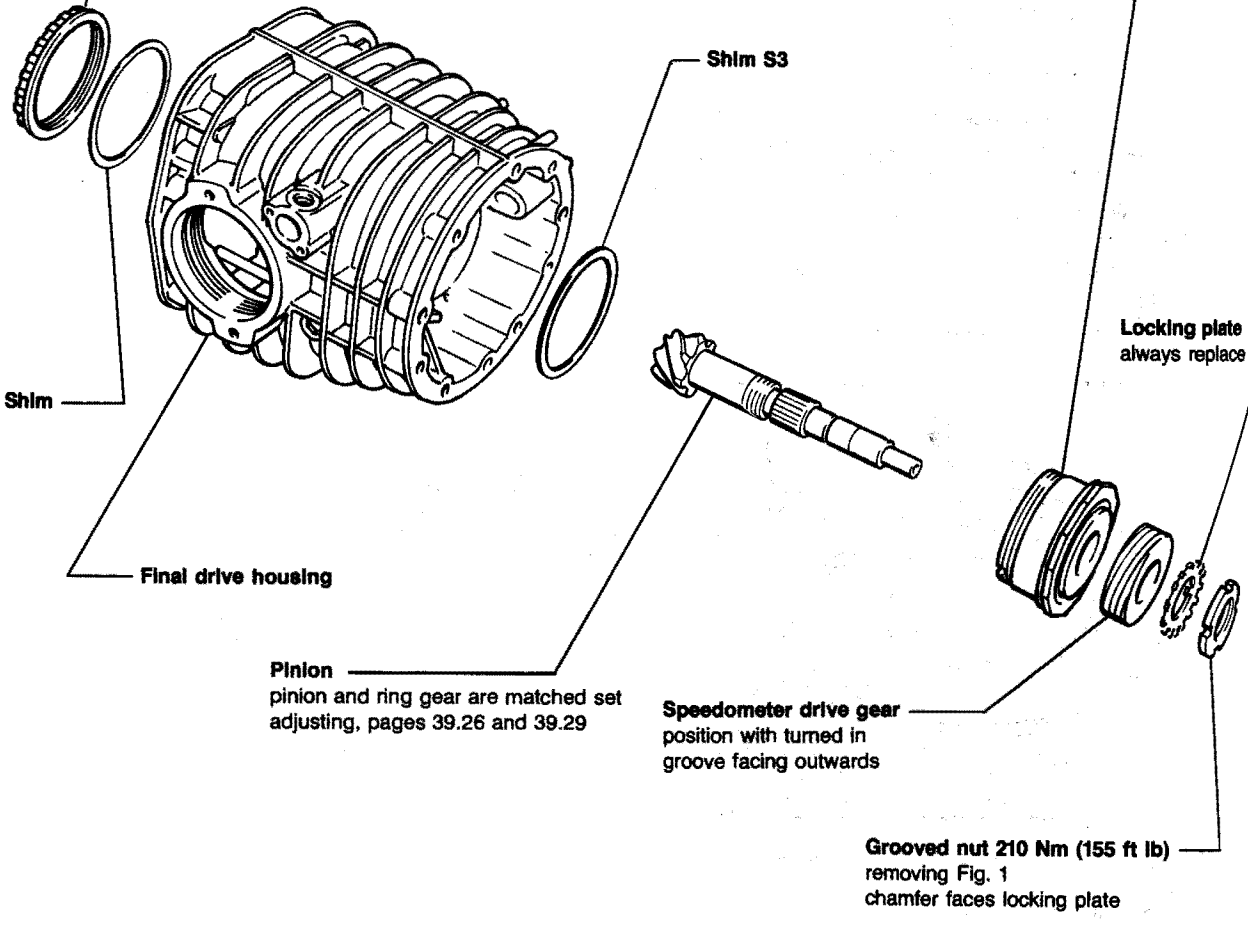
Retaining ring
tightening/loosening, pages 39.36 and 39.37
Dual taper roller bearing
removing Fig. 2
installing Fig. 3
determine position of pinion
prior to removing, page 39.25
check turning torque Figs. 4 and 5
Shim S3
Shim
Final drive housing
Locking plate
always replace
Pinion
pinion and ring gear are matched set
adjusting, pages 39.26 and 39.29
Speedometer drive gear
position with turned in
groove facing outwards
Grooved nut 210 Nm (155 ft lb)
removing Fig. 1
chamfer faces locking plate
39-1172

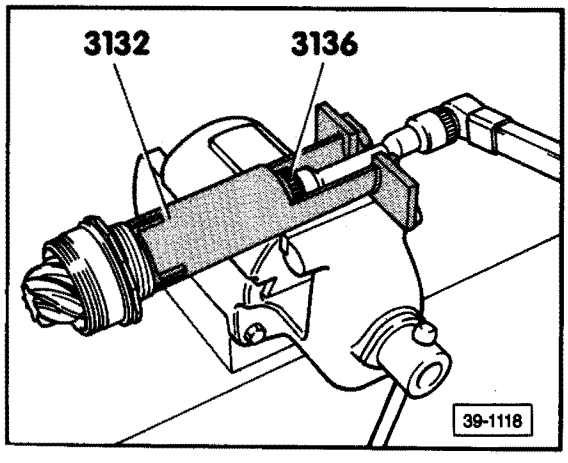

Fig. 1 Grooved nut, removing/installing

(at final drive with viscous coupling)

— install and tighten grooved nut to 210 Nm (155 ft lb)
— check turning torque of bearing

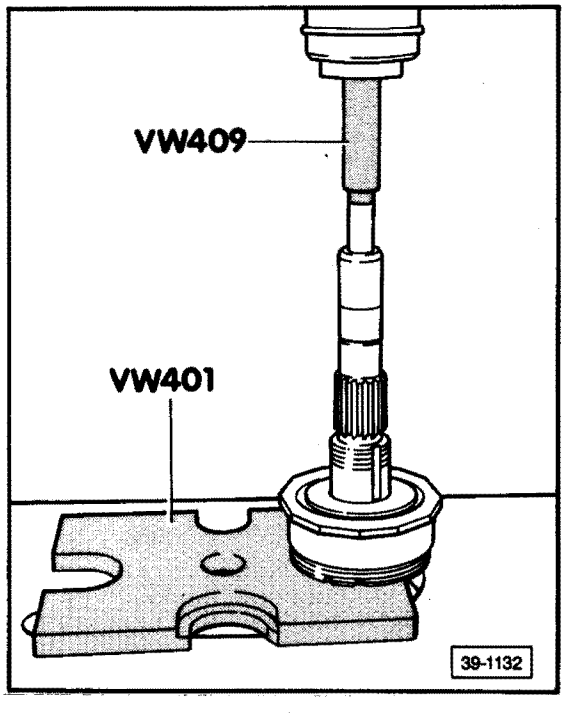

Fig. 2 Bearing, removing

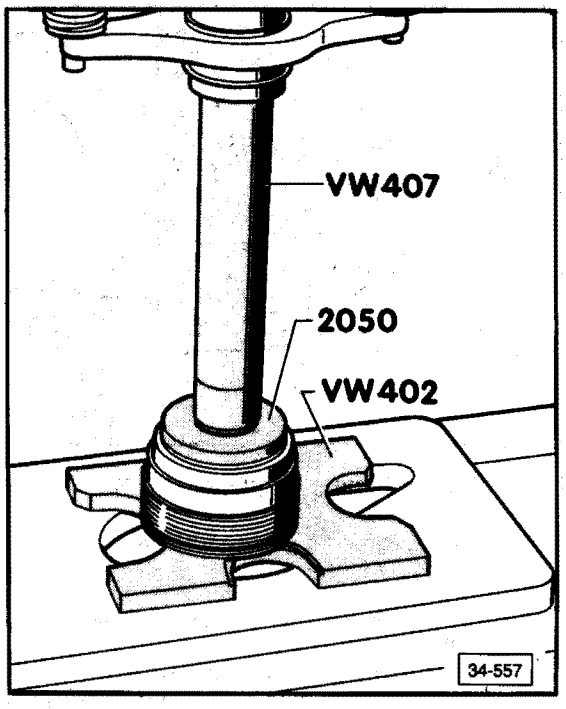

Fig. 3 Bearing, installing

— heat inner rings to approximately 100°C (212°F)
— position and press in

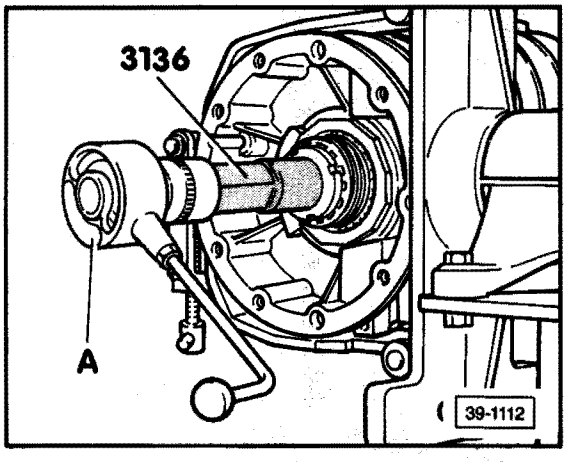

Fig. 4 Bearing turning torque, checking

A — Commercial gauge, 0-600 Ncm (0-54 in. lb)

— lubricate bearing with hypoid transmission oil
— tighten retaining ring as specified
— rotate pinion in both directions 15-20 times without interruption
— rotate again and read turning torque

Turning torques

New bearings	Used bearings*
to 210 Ncm (19 in. lb)	to 70 Ncm (6.2 in. lb)

*after running at least 30 miles

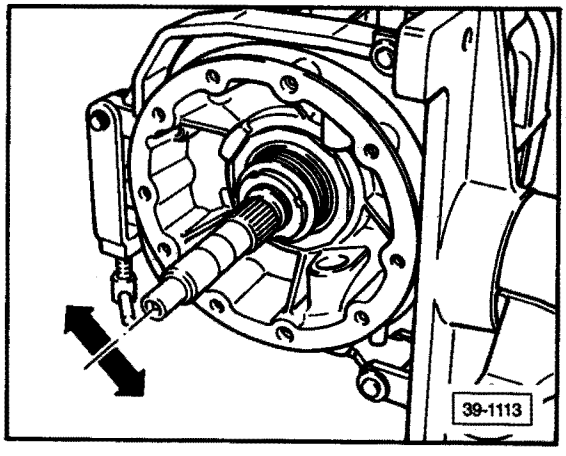

Fig. 5 End play, checking

— if turning torque equals zero, check pinion shaft bearing for end play
— if any end play is felt, replace bearing

Technical data

- code letters
- application
- gear ratios

Front final drive code letters		ACU	
date of manufacture from to		10/85	
Application	vehicle	Vanagon Syncro	
	engine	2.1 Liter 70 kw (95 bhp SAE net)	
	manual transmission	AAK	AAN
Ratio		34 : 7 = 4.86	
Capacity		1.6 US qt (1.5 Liters)	
Lubricant specification		Gear oil GL-4 SAE 80	
Axle shaft flange		100 mm	

Driveshaft, removing/installing

Work sequence

Removing

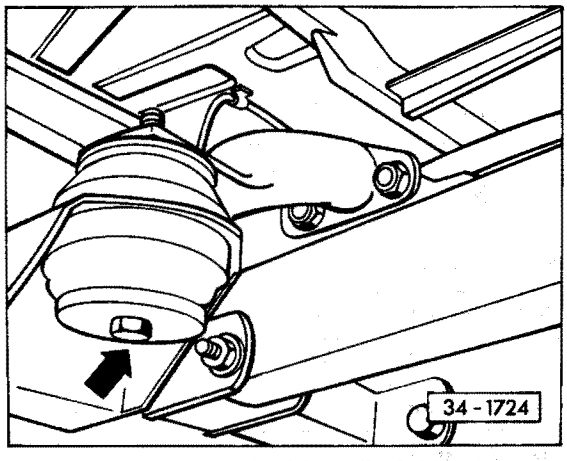

— loosen mounting bolt of front final drive (arrow) Do **NOT** remove bolt.

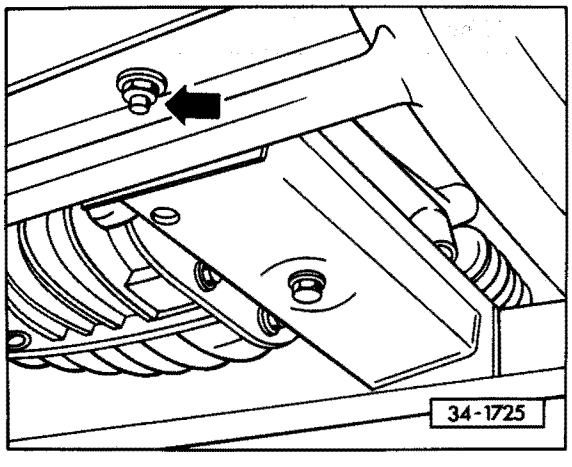

— loosen side bolts of front final drive mounting bracket (arrow) Do **NOT** remove bolts.

CAUTION

Front final drive mounts **MUST** be loosened to prevent damage to the driveshaft universal joints when removing driveshafts.

CAUTION

The installed position of the driveshaft must be noted for reinstallation. Vibrations due to incorrect installation can cause cracks in the transmission housing or engine block.

Note

The universal joints cannot be replaced using standard workshop tools and are not available as replacement parts.

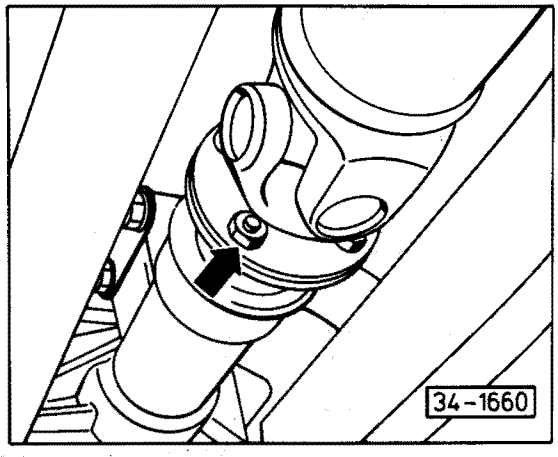

— remove bolts (arrow) at front and rear driveshaft flanges and remove driveshaft

Installing

— install driveshaft and tighten bolts to 35 Nm (26 ft lb)

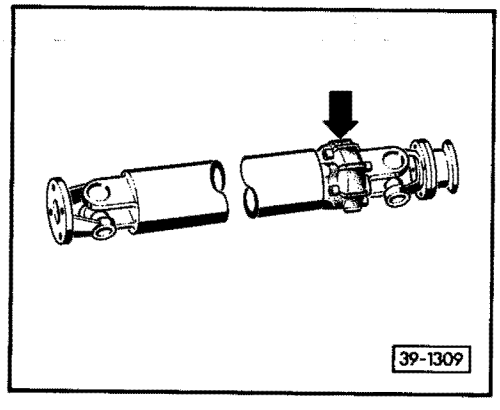

Note

On vehicles with fuel injection and rubber damper on driveshaft (arrow), damper faces transmission.

— align front final drive in longitudinal direction and tighten mounting bolts

CAUTION

Front final drive alignment must be done to ensure driveshaft is installed without distortion.

Driveshaft flange oil seal, replacing
(on front final drive or transmission)

Work sequence

—remove driveshaft (see page 39.43)

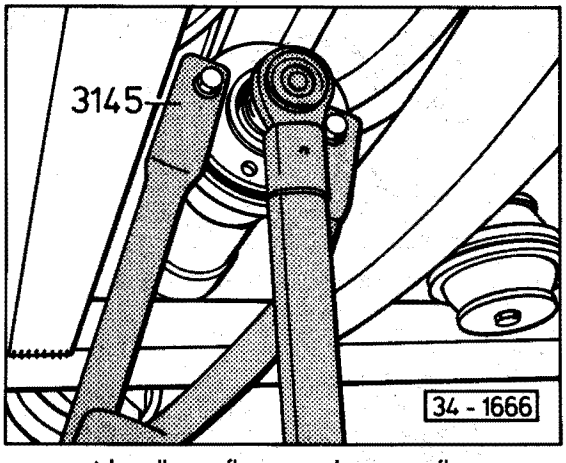

— mount handle on flange and remove flange shaft nut

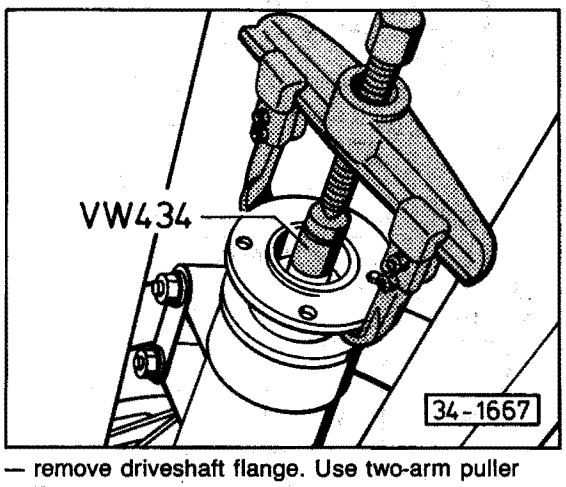

— remove driveshaft flange. Use two-arm puller if necessary
— remove oil seal with VW 681 or similar tool

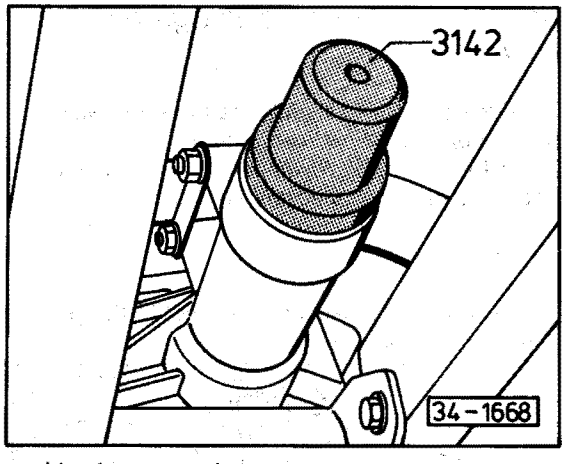

— drive in new seal to stop

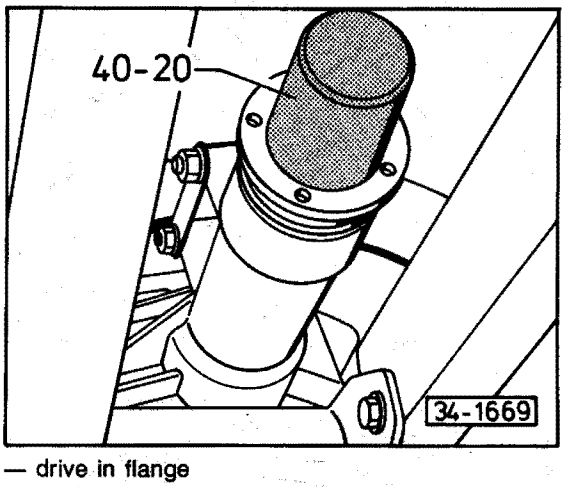

— drive in flange
— mount handle 3145 and tighten flange shaft nut to 160 Nm (118 ft lb)
— install driveshaft and tighten bolts to 35 Nm (26 ft lb)

Front final drive axle flange oil seals, replacing

If both left and right oil seals are to be replaced, remove front final drive (see page 39.47).
If the oil seal is to be replaced on one side only, remove suspension as described below.

Work sequence

— remove bolts connecting axle shaft to flange
— remove spacer ring

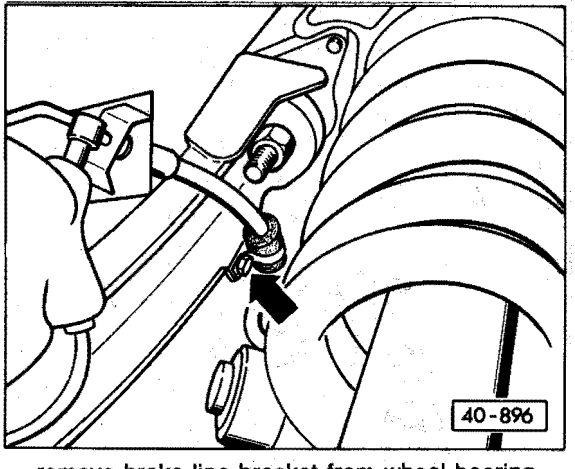

— remove brake line bracket from wheel bearing housing (arrow)

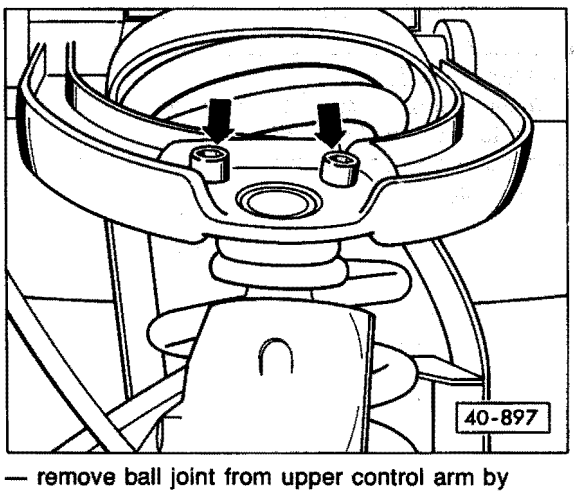

— remove ball joint from upper control arm by removing bolts (arrows)

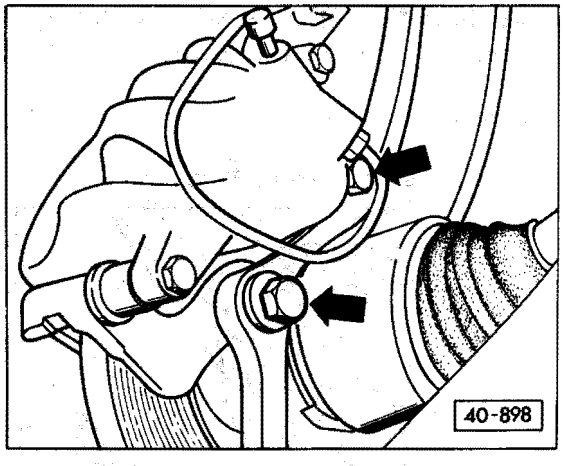

— remove brake caliper (arrows) and tie to body with wire

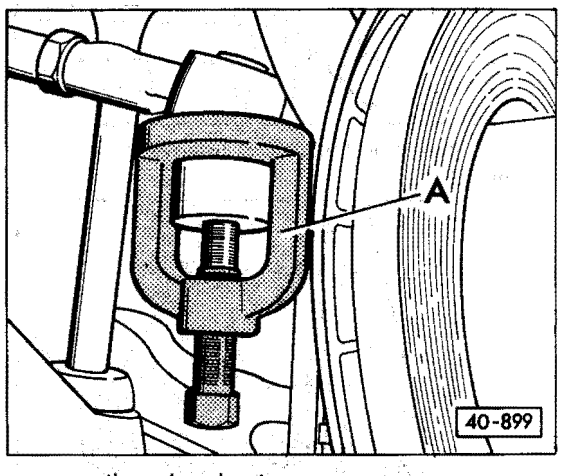

— press tie rod end out
A = US 1014

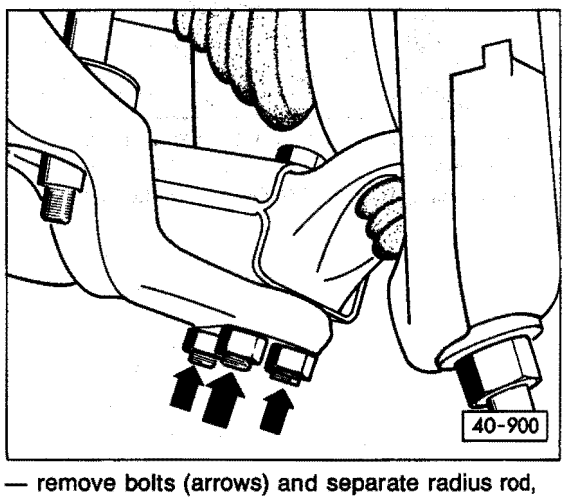

— remove bolts (arrows) and separate radius rod, wheel bearing housing and lower control arm

more



body



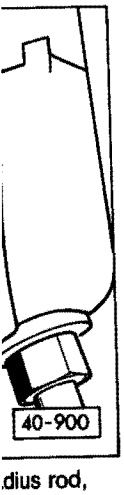

dius rod,
rol arm

— remove wheel bearing housing complete with axle shaft
— pierce cap in drive flange with screwdriver and pry out
— remove circlip and wave washer
— remove drive flange with VW 391
— remove lock ring

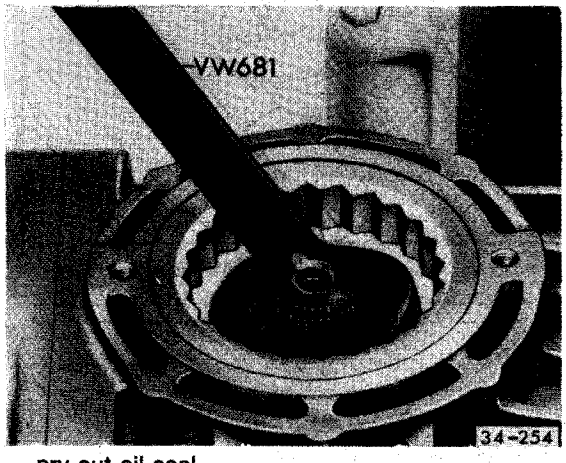

— pry out oil seal

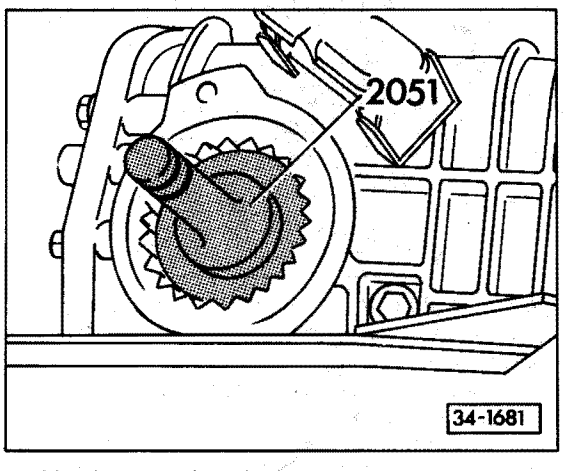

— drive in new oil seal to stop
— install lock ring
— install drive flange with VW 391
— install wave washer
— press circlip into groove with VW 454 and at same time check that washer is centered
— replace cap

— install wheel bearing housing with axle shaft
— install bolts for radius rod, wheel bearing housing and lower control arm

CAUTION

Do **not** damage axle shaft boot.

— install tie rod, brake caliper and upper ball joint
— install brake hose bracket
— bolt axle shaft flange with spacer washer to drive flange

Tightening torques

radius rod/wheel bearing housing on control arm	100 Nm (73 ft lb)
brake caliper to housing	240 Nm (177 ft lb)
wheel bolts	180 Nm (132 ft lb)
axle shaft to drive flange	35 Nm (26 ft lb)
ball joint to upper control arm	60 Nm (44 ft lb)

Front final drive, removing/installing

Work sequence

Removing

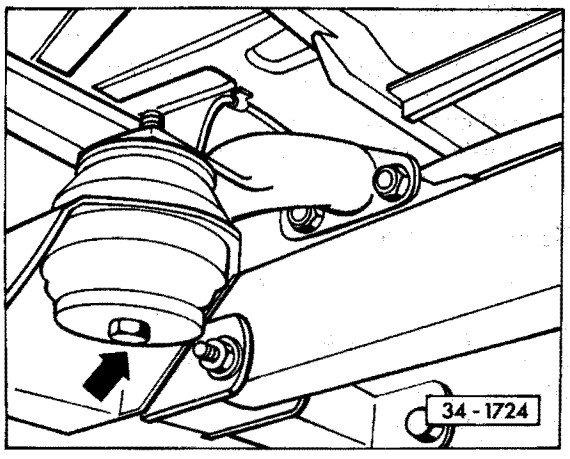

— loosen mounting bolt of front final drive (arrow). Do **NOT** remove bolt.

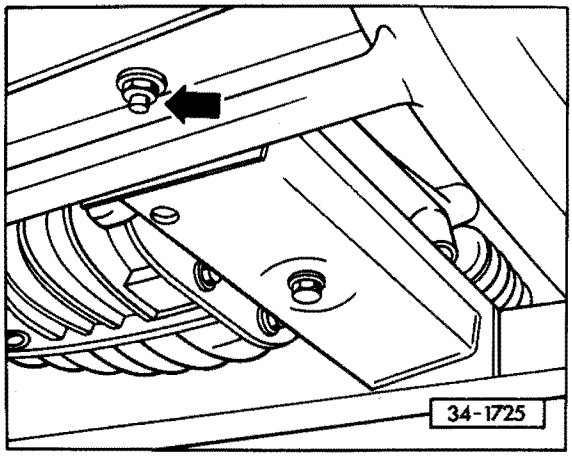

— loosen side bolts of front final drive mounting bracket (arrow). Do **NOT** remove bolts.

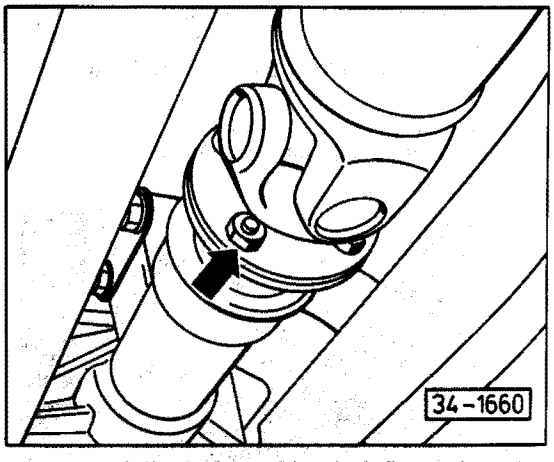

— remove bolts at front driveshaft flange (arrow) and tie driveshaft end to skid plate

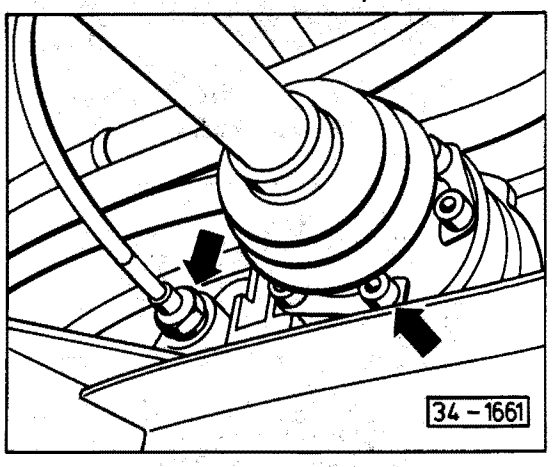

— remove right side axle shaft from final drive (right arrow) and disconnect speedometer cable (left arrow)
— remove left side axle shaft from final drive
— remove vent hose

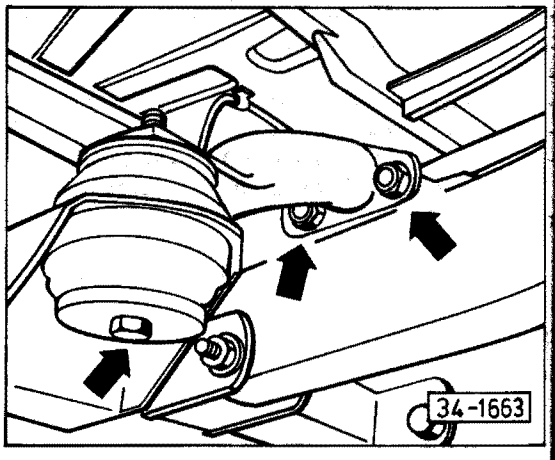

— remove rear mounting bracket (arrows)

more

— support final drive with transmission jack and small adapter

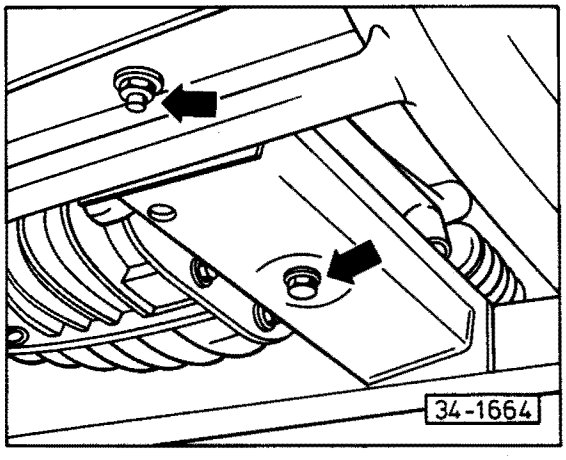

— remove bolts from front mounting (arrows) and take bracket out by pulling forward

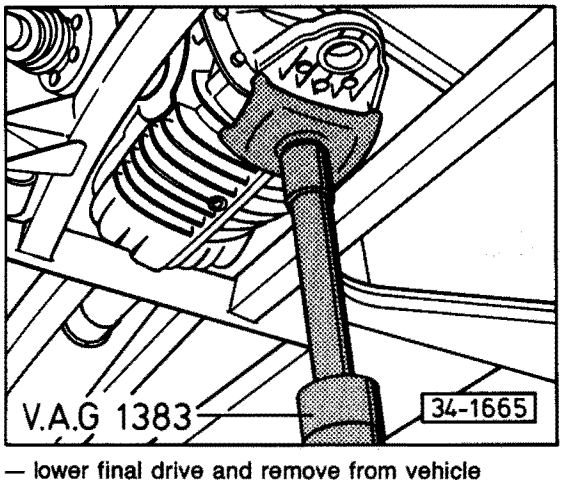

— lower final drive and remove from vehicle (2 mechanics required)

Installing

Proceed in reverse order of removal and note the following:

— tighten mounting bolts of front and rear brackets last

Tightening torques

axle shaft to final drive	35 Nm (26 ft lb)
driveshaft to final drive	35 Nm (26 ft lb)

Differential
Automatic Transmission

Index

– Adjusting ring 39.51
– Assembly 39.56
– Cover plate 39.51
– Differential bearing outer race 39.53
– Drive flange oil seal 39.53
– Final drive assembly 39.50
– Governor oil seal 39.52
– Pinion bearing outer race 39.52, 39.54
  inner race 39.54, 39.55
– Pinion oil seals 39.52–39.54
– Ring gear 39.56
– Ring gear/Pinion adjusting 39.57– 39.60
  backlash 39.61, 39.62
– Torque converter oil seal 39.51

Final drive ratio:
4.09:1
Final drive lubricant:
Hypoid oil SAE 90, Mil-L2105 B
Capacity:
1.25 ltr (1.3 US qt)

CAUTION

If ring gear/pinion bearings can be reused it is necessary to measure backlash (page 39.13) and turning torque on pinion (page 39.14) **before** disassembling final drive. Note these measurements and adjust during reassembly to obtain same settings

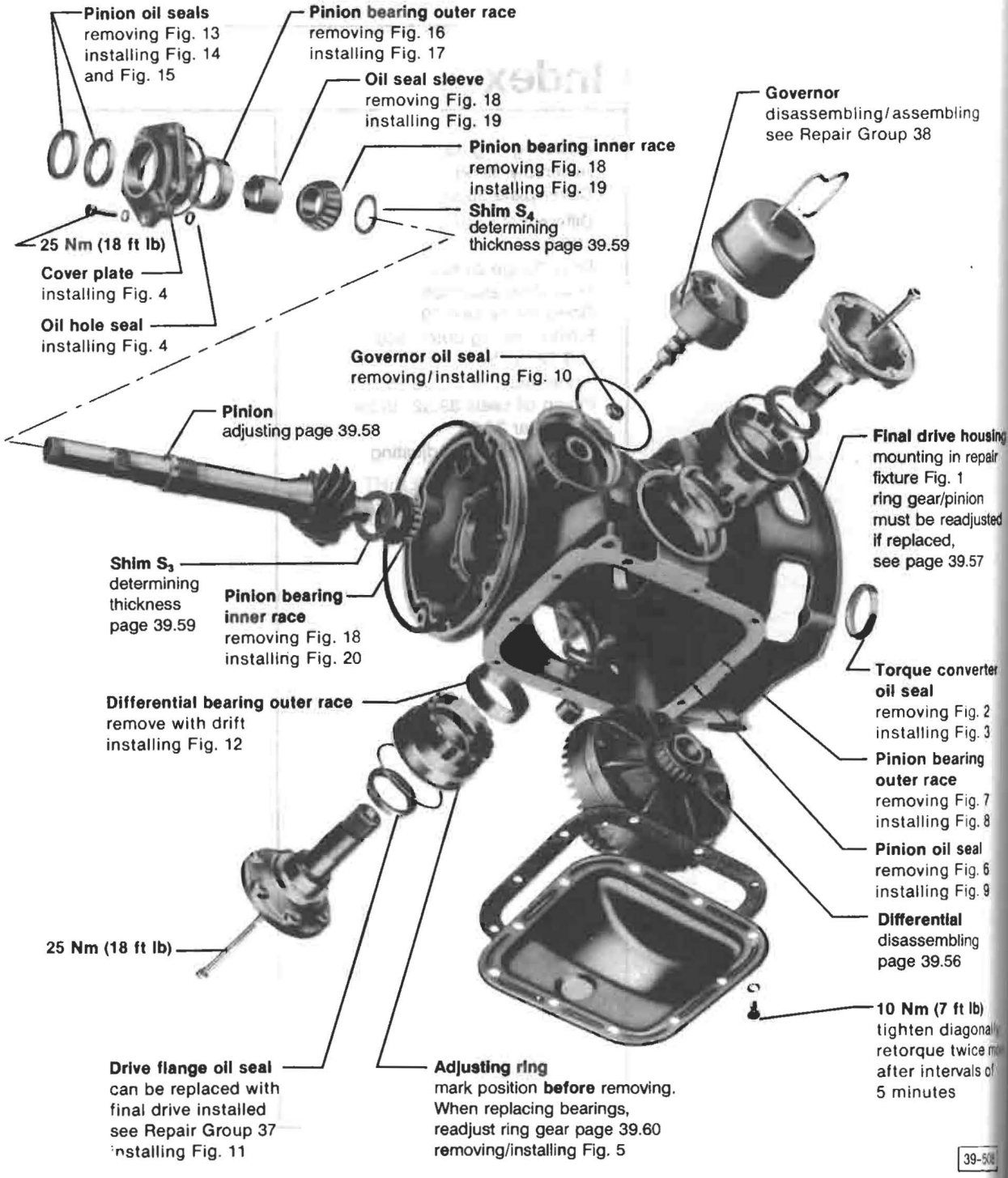

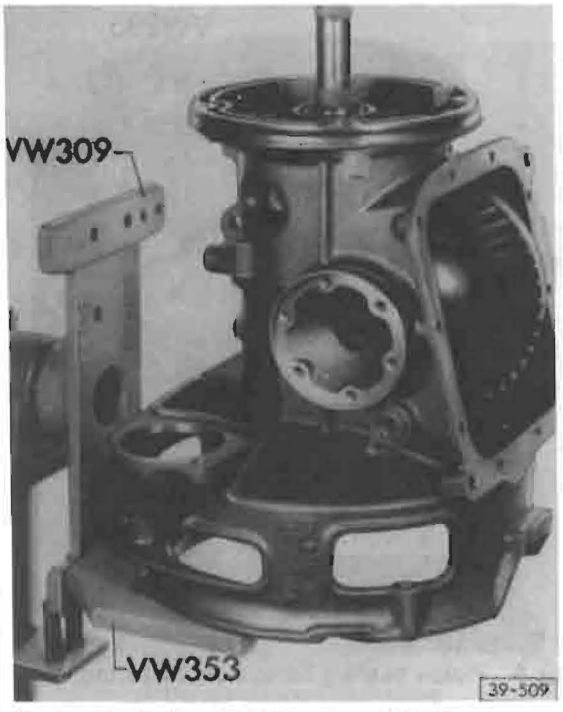

Fig. 1 Final drive housing, mounting

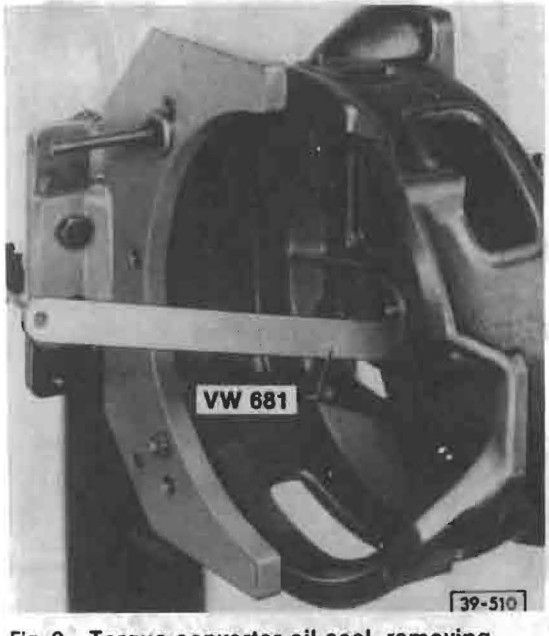

Fig. 2 Torque converter oil seal, removing

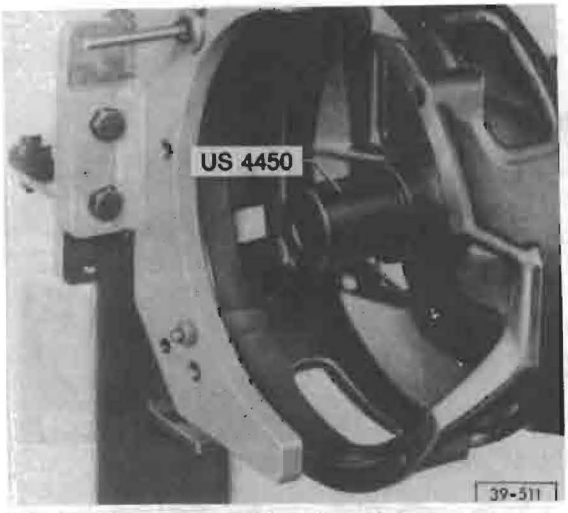

Fig. 3 Torque converter oil seal, installing

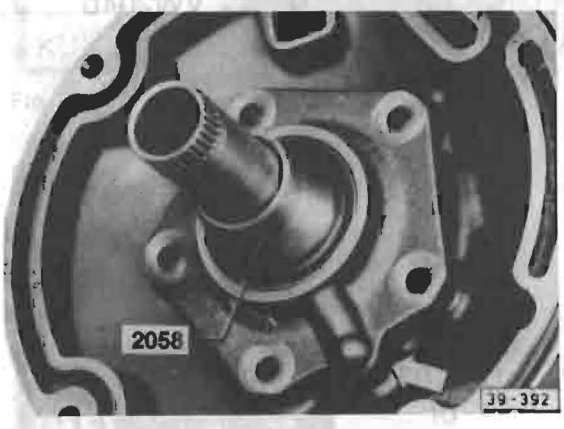

Fig. 4 Cover plate/Oil hole seal, installing

— first insert seal (arrow) for oil hole
— install cover plate and tighten to 25 Nm (18 ft lb). Use sleeve 2058 when installing cover

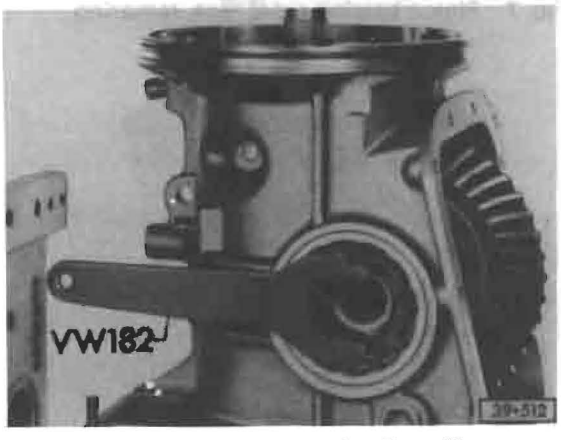

Fig. 5 Adjusting ring, removing/installing

— when reusing ring, mark position **before** removing

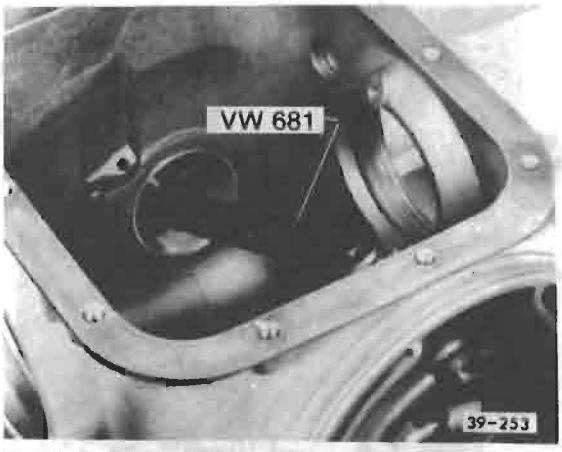

Fig. 6 Pinion oil seal, removing

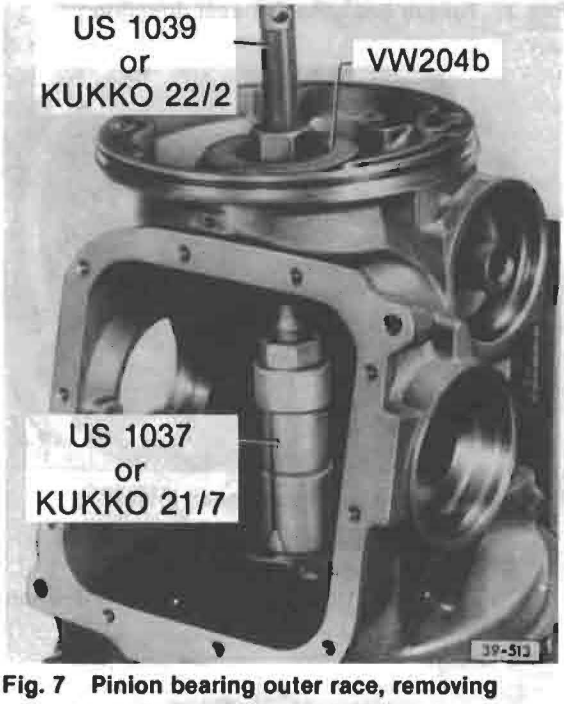

Fig. 7 Pinion bearing outer race, removing



Fig. 8 Pinion bearing outer race, installing

— drive in until seated

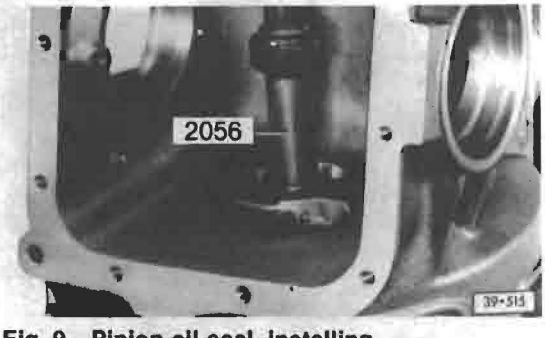

Fig. 9 Pinion oil seal, installing

• seal lip faces converter



Fig. 10 Governor oil seal, removing/installing

— remove seal with VW 248/1 together with adapter 248/2
— drive in oil seal until seated using VW 248/1 without adapter (seal lip faces governor)

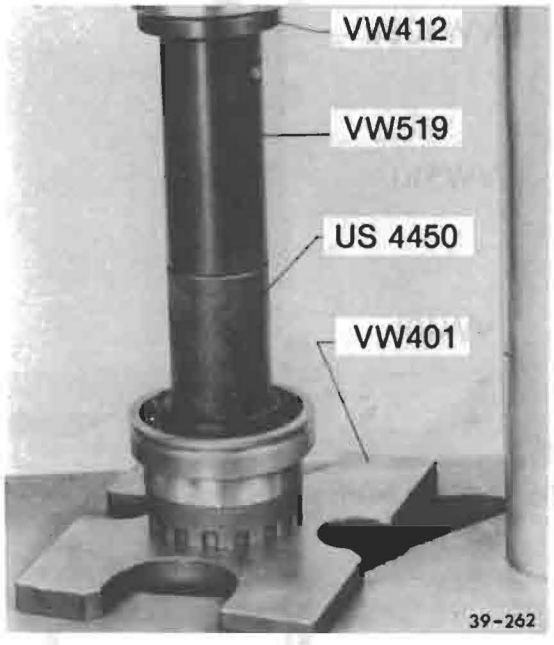

Fig. 11 **Drive flange oil seal, installing**

— fill space between lips with multi-purpose grease and press in flush



Fig. 12 **Differential bearing outer race, installing**

— press in until seated

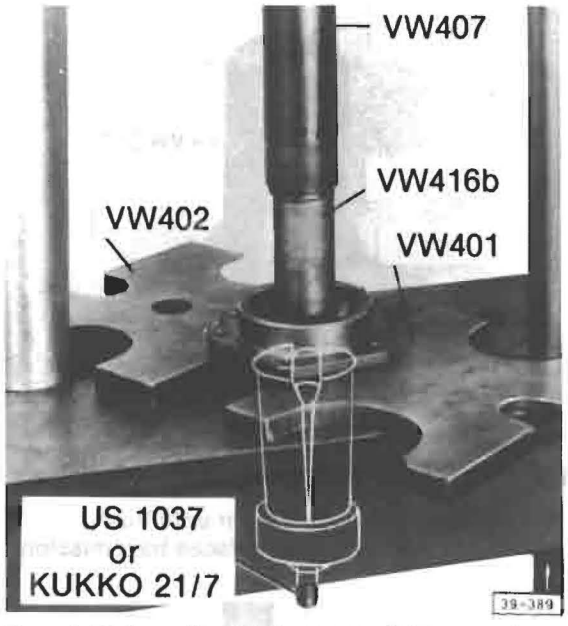

Fig. 13 **Pinion oil seals in cover plate, removing**

— press out seals individually



Fig. 14 **Pinion oil seal (inner) in cover, installing**

— drive seal into cover until seated. Open side of seal faces final drive



Fig. 15 Pinion oil seal (outer) in cover, installing

— drive seal into cover until flush. Open side of seal faces transmission

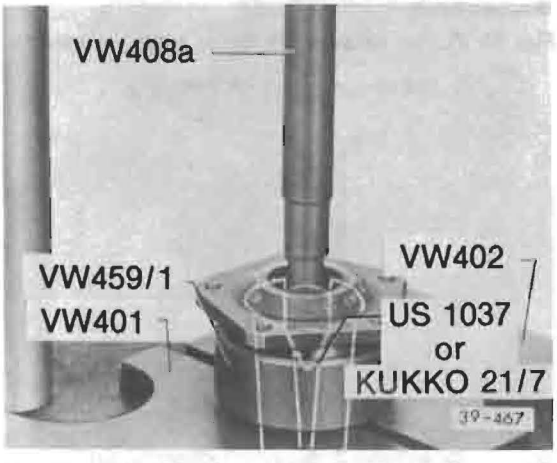

Fig. 16 Pinion bearing outer race in cover, removing

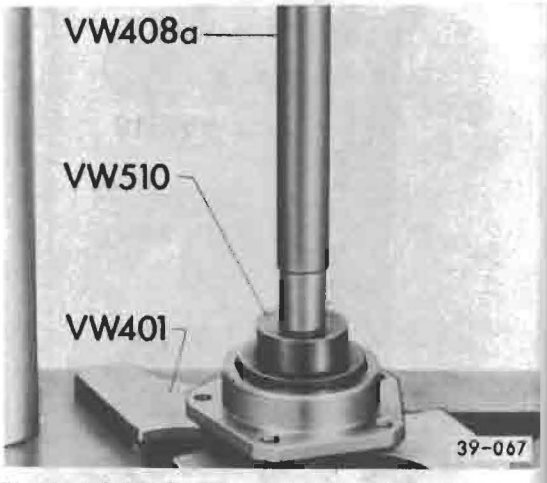

Fig. 17 Pinion bearing outer race in cover, installing

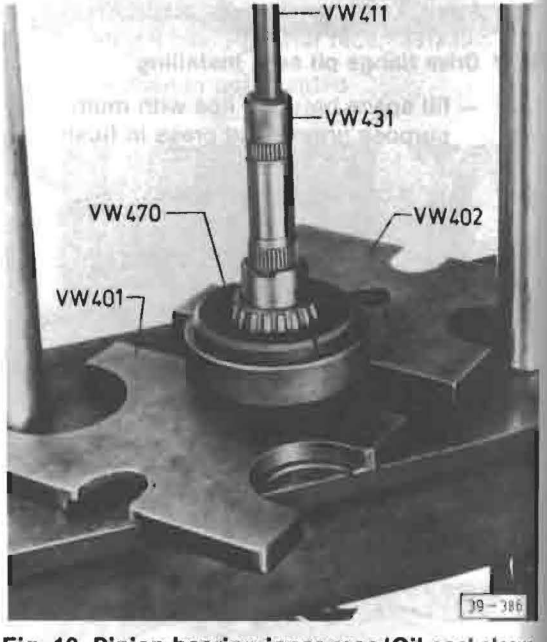

Fig. 18 Pinion bearing inner race/Oil seal sleeve, removing

— press off bearing together with seal sleeve (tool US 1103 can be used)

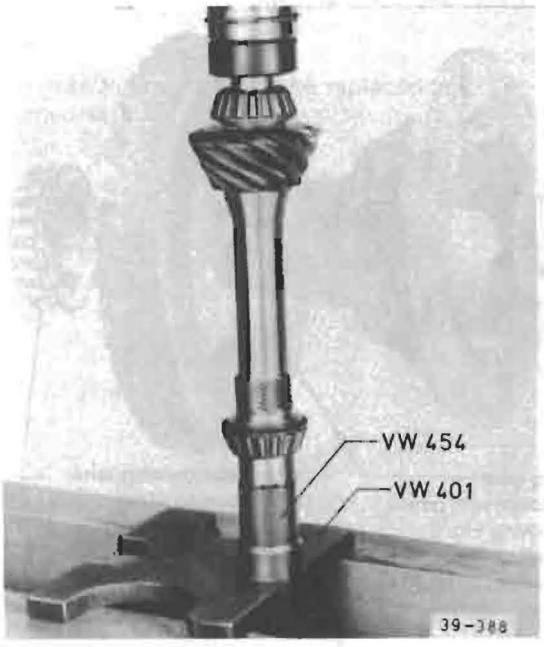

Fig. 19 Pinion bearing inner race/Oil seal sleeve, installing

— heat bearing and sleeve to approx. 100°C (212°F)
— press onto pinion shaft

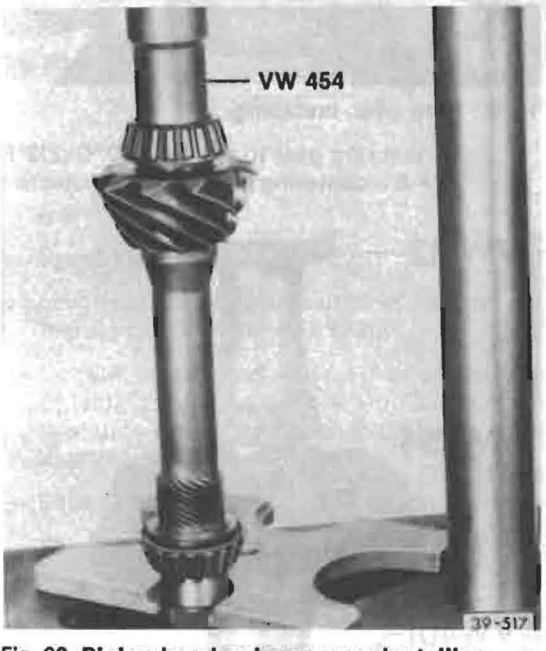

Fig. 20 Pinion bearing inner race, installing

— heat inner race to approx. 100°C (212°F) and press into shaft

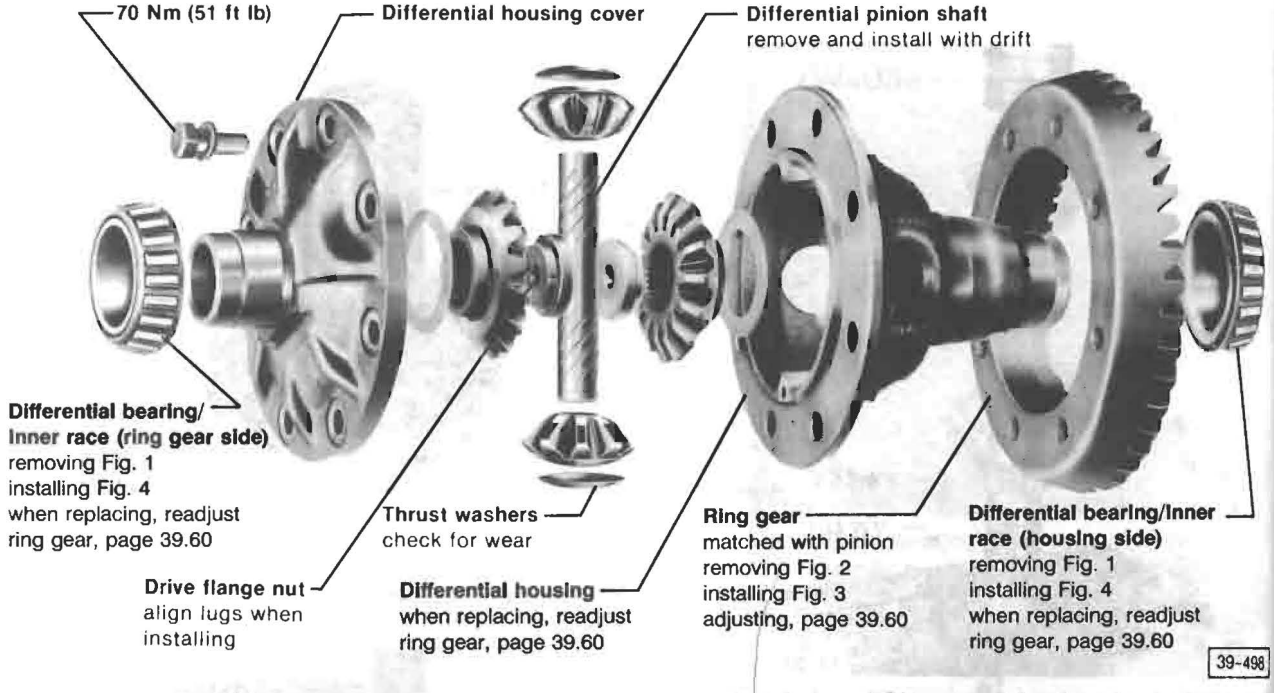



Fig. 1 Differential bearing/Inner race, removing



Fig. 2 Ring gear, removing

— mount differential in vise
— loosen bolts and tap lightly on bolt heads



Fig. 3 Ring gear, installing

— heat ring gear to approx. 100°C (212°F)
• A = centering pins (local manufacture)

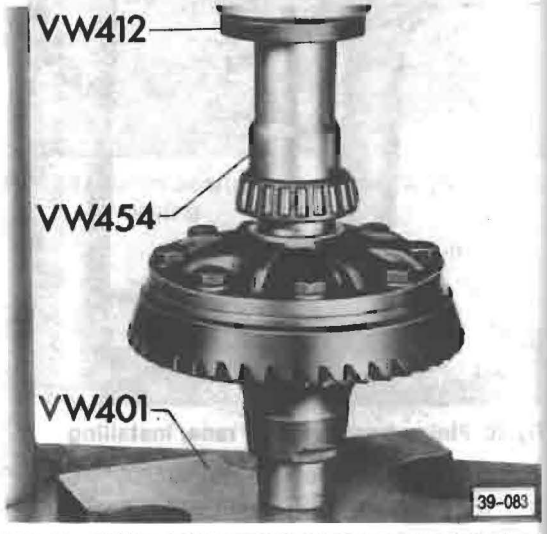

Fig. 4 Differential bearing/Inner race, installing

— heat bearing to approx. 100°C (212°F) and press on

Ring gear/Pinion, adjusting

Note

Ring gear/Pinion may only be replaced as matched set

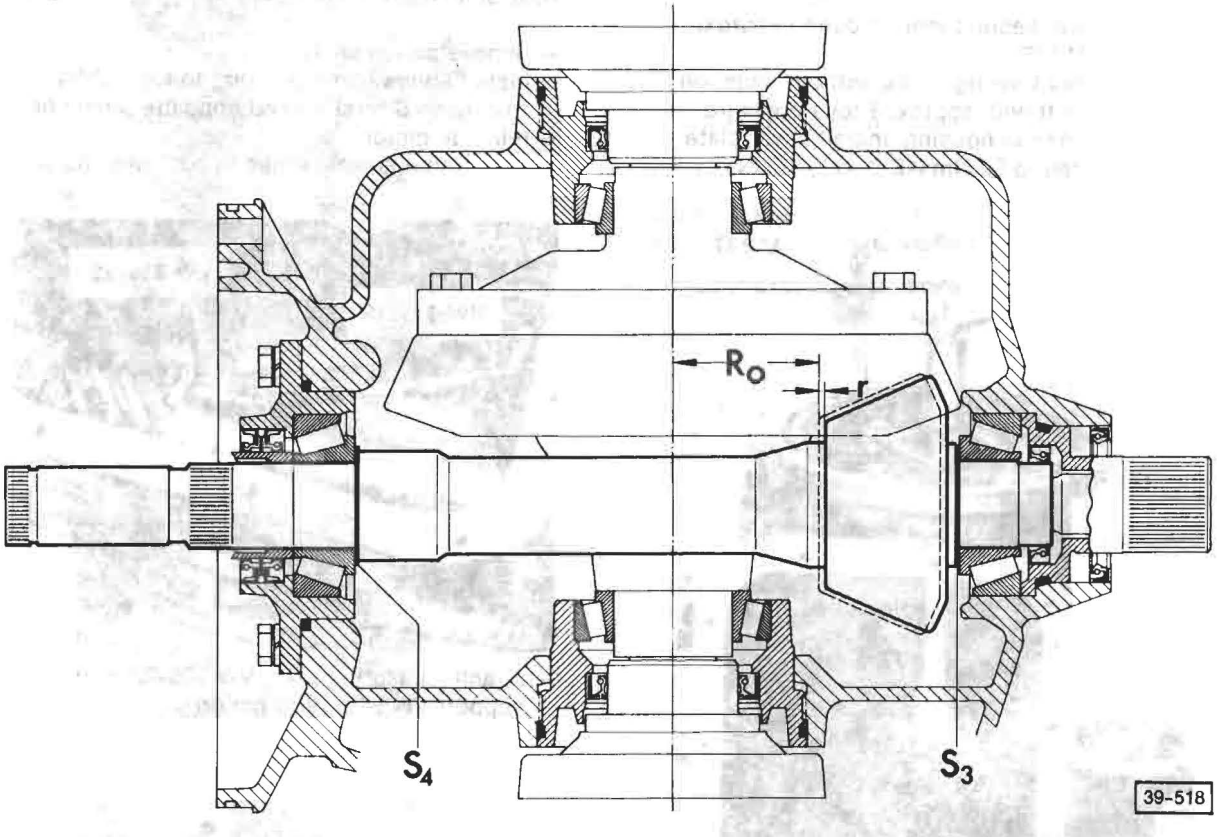

Position of shims S_3/S_4

Ro = Length of master gauge used in factory testing machine. **Ro** = 52.60 mm

r = Deviation measured against master gauge of testing machine used in production. Deviation **r** is always given in 0.01 mm. For example 52 means **r** = 0.52 mm

S_3 = Shim for bearing preload (behind pinion head)

S_4 = Shim for pinion position (opposite end)

Note

If pinion bearings will not be changed, measure turning torque of pinion **before** disassembly and adjust to same turning torque during assembly

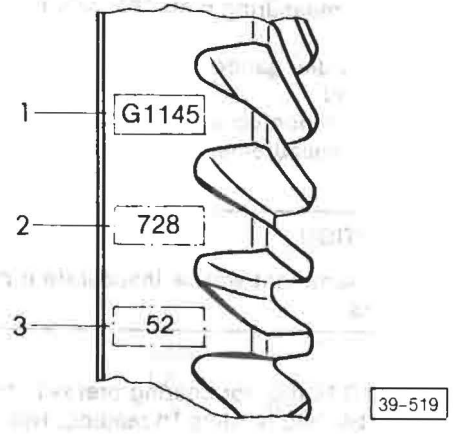

Marks on ring gear

1 = Identification G 1145 refers to Gleason gear set with ratio of 11:45
2 = Serial number of matched gear set
3 = Deviation **r**

Pinion, adjusting

Work sequence

— install bearing outer race into cover plate and housing
— heat pinion bearing inner races to approx. 100 °C (212 °F)
— press inner bearing races, without shim, on pinion shaft with approx. 3 tons pressure
— insert pinion in housing, install cover plate and tighten to 25 Nm (18 ft lb)

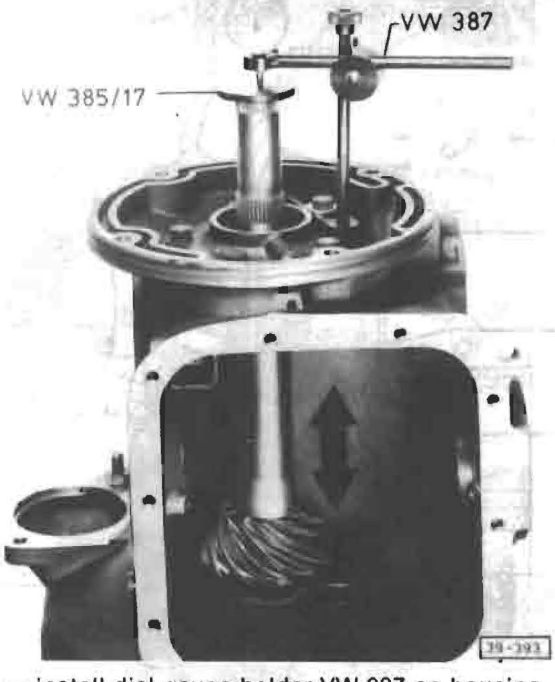

— install dial gauge holder VW 387 on housing
— place measuring plate VW 385/17 on pinion shaft
— install dial gauge and set to zero with 1 mm preload
— move pinion up and down without turning and note measurement

CAUTION

Measurement will be inaccurate if pinion turns

— add 0.10 mm for bearing preload and 0.10 mm for bearing settling to reading. Result is **S total**

Example

measured reading	2.46 mm
bearing preload	+ 0.10 mm
settling allowance (constant)	+ 0.10 mm
Total shim thickness (**S total**)	= 2.66 mm

— remove pinion shaft
— install shims corresponding to total shim thickness **S total** on end opposite pinion head
— reinstall pinion
— turn pinion several times in both directions

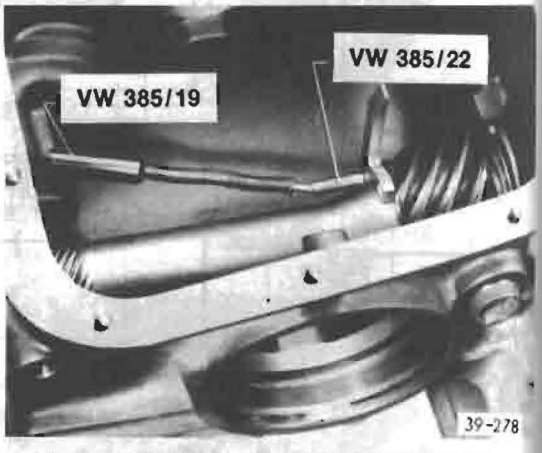

— attach measuring plate VW 385/22 with support VW 385/19 to pinion

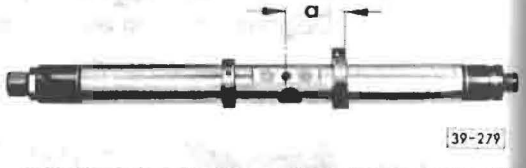

— set clamping ring on universal measuring bar
• **a** = approx. 74 mm (2.913 in.)

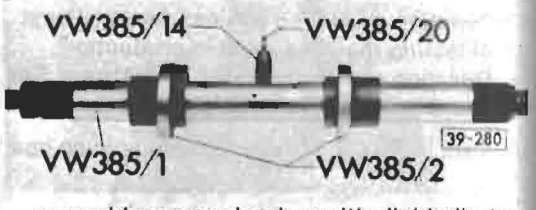

— assemble measuring bar with dial indicator extension VW 385/20
— turn adjusting ring on left side into housing until flush

– insert measuring bar into housing and screw in adjusting ring

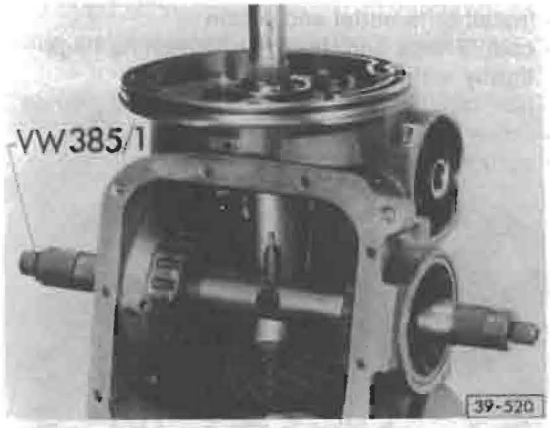

– move centering disc outward with movable setting ring until measuring bar can just be turned by hand

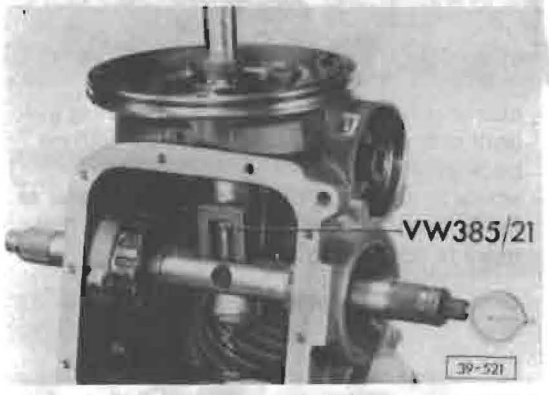

– place master gauge VW 385/21 on measuring bar and zero dial indicator with 3 mm preload
– turn measuring bar until dial indicator pin contacts end plate and gauge shows maximum deflection (return point)
– note reading **e** (example: 1.72 mm) and determine thickness of shims S_3 and S_4

Note

Master gauge VW 385/30 can be used instead of VW 385/21. Set **Ro** to 52.60 mm

Shim S_3, determining thickness

$$S_3 = e - r$$

Example

dial indicator reading **e**	1.72 mm
deviation **r** marked on ring gear	– 0.42 mm
S_3 thickness	= 1.30 mm

– select shims from table

Shim S_4, determining thickness

$$S_4 = S \text{ total} - S_3$$

Example

total shim thickness	2.66 mm
S_3 thickness	– 1.30 mm
S_4 thickness	= 1.36 mm

– select shims from table below

Shims available

Shim thickness range in mm	Shim to be installed	Part No.
1.050–1.100	1.100	082 519 141 AE
1.105–1.125	1.125	082 519 141 AF
1.130–1.150	1.150	082 519 141 AG
1.155–1.175	1.175	082 519 141 AH
1.180–1.200	1.200	082 519 141 AJ
1.205–1.225	1.225	082 519 141 AK
1.230–1.250	1.250	082 519 141 AL
1.255–1.275	1.275	082 519 141 AM
1.280–1.300	1.300	082 519 141 AN
1.305–1.325	1.325	082 519 141 AP
1.330–1.350	1.350	082 519 141 AQ
1.355–1.375	1.375	082 519 141 AR
1.380–1.400	1.400	082 519 141 AS
1.405–1.425	1.425	082 519 141 AT
1.430–1.450	1.450	082 519 141 BA
1.455–1.475	1.475	082 519 141 BB
1.480–1.500	1.500	082 519 141 BC
1.505–1.525	1.525	082 519 141 BD
1.530–1.550	1.550	082 519 141 BE
1.155–1.575	1.575	082 519 141 BF
1.580–1.600	1.600	082 519 141 BG
1.605–1.625	1.625	082 519 141 BH
1.630–1.650	1.650	082 519 141 BJ
1.655–1.675	1.675	082 519 141 BK
1.680–1.700	1.700	082 519 141 BL
1.705–1.725	1.725	082 519 141 BM
1.730–1.750	1.750	082 519 141 BN
1.755–1.775	1.775	082 519 141 BP
1.780–1.800	1.800	082 519 141 BQ
1.805–1.825	1.825	082 519 141 BR
1.830–1.850	1.850	082 519 141 BS
1.855–1.875	1.875	082 519 141 BT
1.880–1.900	1.900	082 519 141 CA

Note

Measure shims at several points with micrometer. Check for burrs and damage. Use only good shims

– go to next page

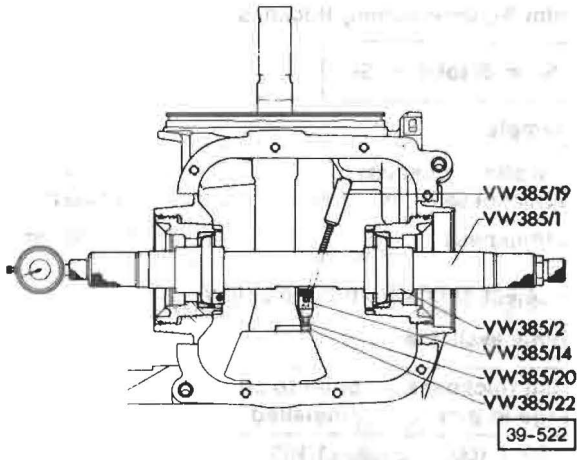

— install shims selected from table
  • S_3 behind pinion
  • S_4 opposite pinion
— install pinion
— lubricate bearings with hypoid gear oil

— turn pinion several times in both directions
— install universal measuring bar
— zero dial indicator with 1 mm preload
— check that indicator reading equals recorded deviation **r** within a tolerance of ± 0.04 mm



— after installing selected shims and pinion shaft, check that turning torque is at least **140 Ncm (12.4 in. lb)**

Note

This figure is for new bearings. If bearings are to be reused, turning torque should be measured before disassembly. When replacing parts that affect ring gear/pinion setting, check page 39.9 to determine which parts need to be adjusted

Ring gear, adjusting

Work sequence

— install differential and pinion
— coat O-rings and threads of adjusting rings lightly with multi-purpose grease
— lubricate bearings lightly with hypoid gear oil
— screw in both adjusting rings until outer surface is flush with housing surface

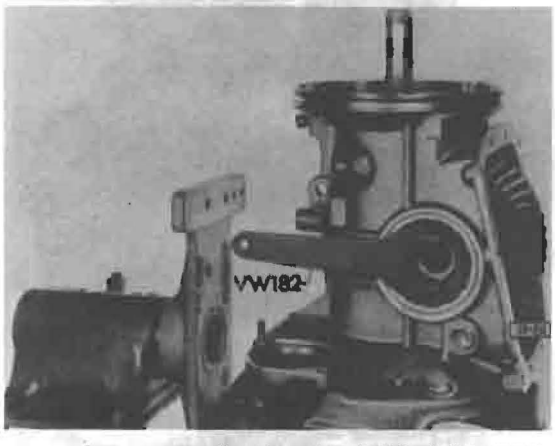

— carefully turn adjusting ring behind ring gear until ring gear meshes with pinion with no backlash
— screw in adjusting ring opposite ring gear as far as possible and preload slightly so that there is no bearing play

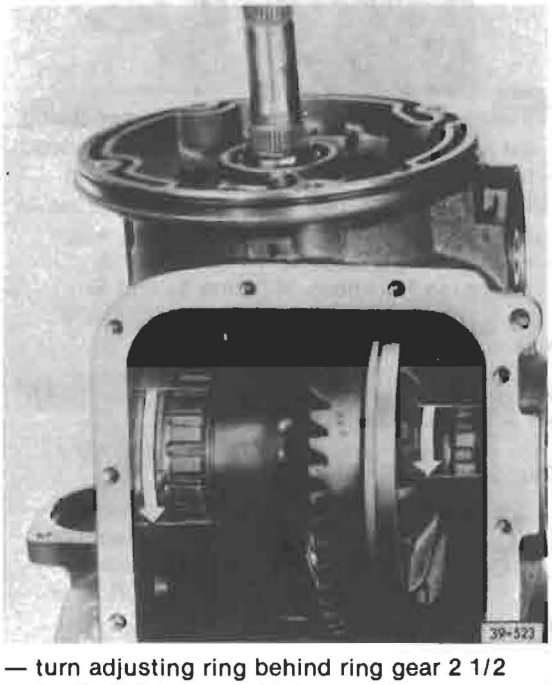

— turn adjusting ring behind ring gear 2 1/2 tooth divisions **out** (right arrow)
— turn adjusting ring opposite ring gear 5 tooth divisions **in** (left arrow). This correctly sets bearing preload and gear backlash

Backlash, checking

Work sequence

– turn pinion several times in both directions

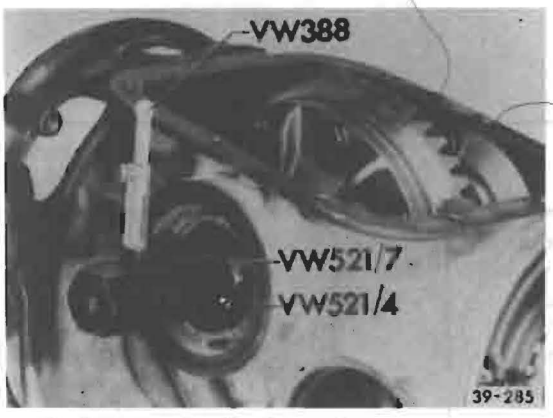

– attach measuring tools as shown



– set measuring lever to 80 mm and place on VW 521/4

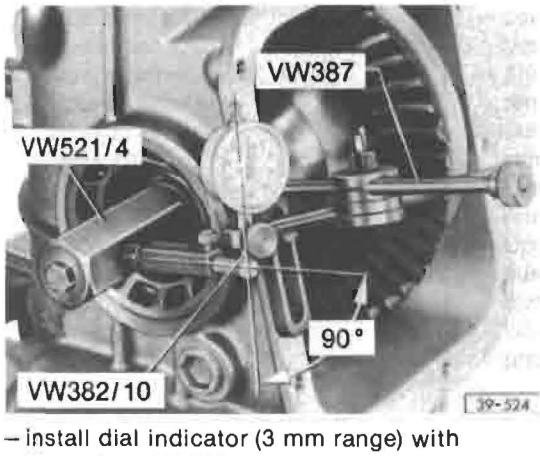

– install dial indicator (3 mm range) with extension VW 382/10 (6 mm flat end) in holder VW 387 and bolt holder to transmission housing

Note

Dial indicator must be located at right angle to measuring bar

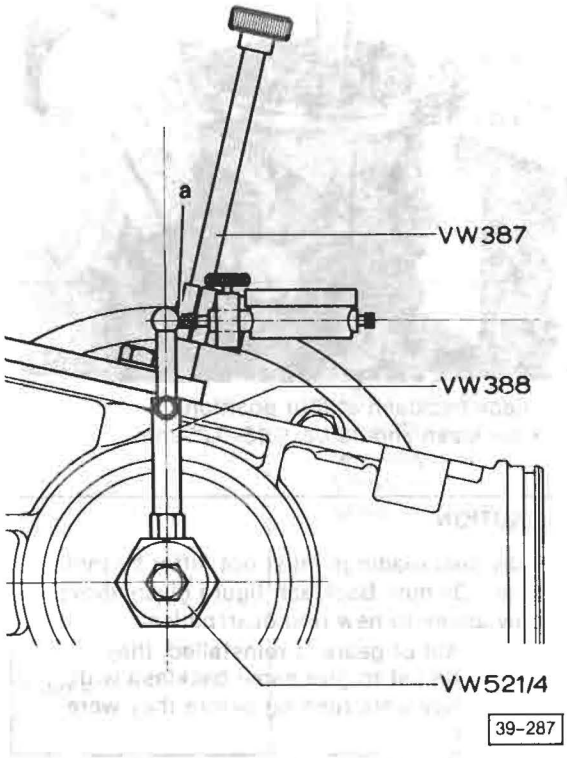

— turn ring gear until measuring lever contacts pin of dial indicator **a** and preloads it to 1.0 mm. Reset dial indicator to zero

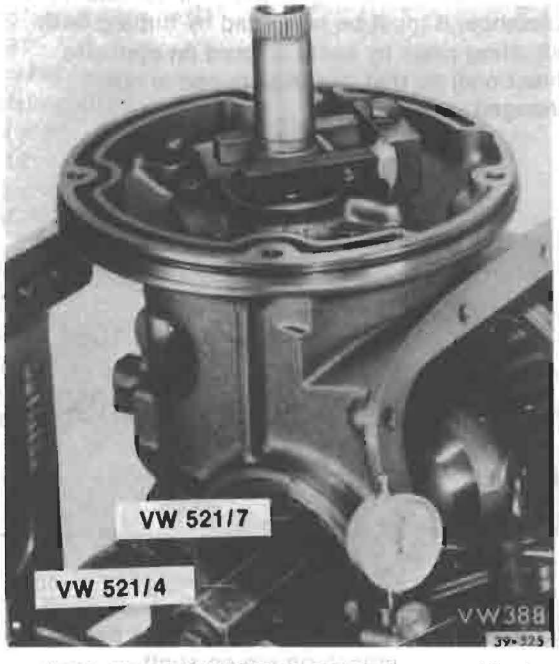

— attach clamp VW 386 to cover plate and lock pinion with clamping screw

— go to next page

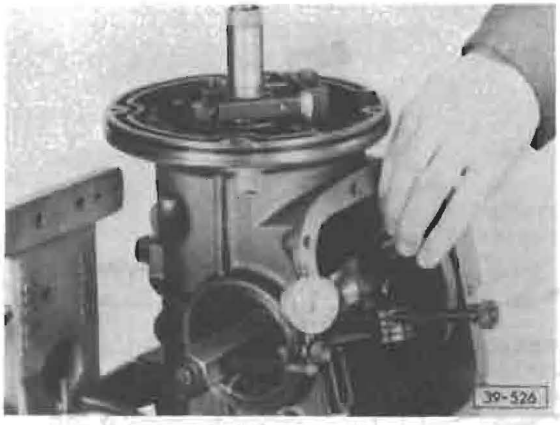

— check backlash at four positions
  • backlash should be: 0.15–0.25 mm

CAUTION

Individual readings must not differ by more than 0.05 mm. Backlash figure given above only aplies to new ring gear/pinion.
If used set of gears is reinstalled, they should be set to give same backlash with which they were running before they were removed

Note

If backlash of new ring gear/pinion is outside tolerance, it must be corrected by turning **both** adjusting rings by same amount (in opposite directions) so that bearing preload is not changed

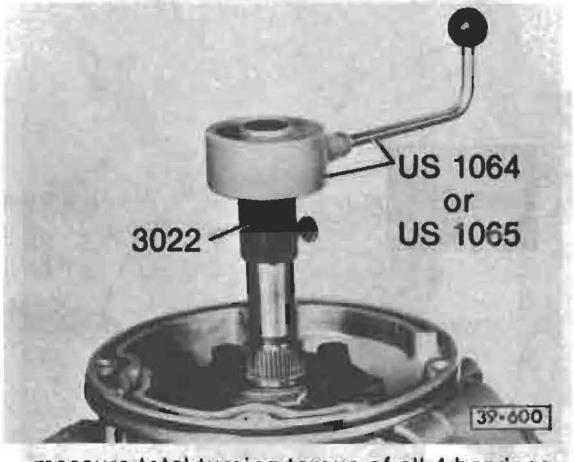

— measure total turning torque of all 4 bearings with torque wrench on pinion shaft
— total turning torque must be at least **20 Ncm (1.8 In. lb)** more than turning torque of pinion shaft alone. If necessary, increase turning torque by screwing in both adjusting rings by same amount

Front Wheel Suspension
Shafts & Axle

Index

— Assembly
early version 40.2
late version 40.7
— Ball joints
assembly 40.10
lower 40.12
— Coil spring
removing/installing 40.3
— Lower control arm
bushing, early version 40.6
bushing, later version 40.8
removing/installing 40.3
— Shock absorber
removing/installing 40.4
— Steering arm
checking 40.12
— Steering knuckle
assembly 40.12
checking for wear 40.12
modification, grease seal 40.13
modification, brake disc
interference 40.14
— Subframe
wax preservation 40.14
— Upper control arm
bushing 40.5
lower 40.6
removing 40.5
wax preservation 40.14
— Wheel bearing
adjusting 40.11
assembly 40.10

Syncro
— Axle shaft
assembly 40.29
length 40.30
removing/installing 40.28
— Ball joints
pressing 40.25
— Components
assembly 40.15
— Coil spring
removing/installing 40.20
— CV joint, inner
assembly 40.29
disassembling/assembling 40.33
pressing 40.31
— CV joint, outer
assembly 40.29
disassembling/assembling 40.32
removing 40.31
— Guards, drive shaft/engine
removing/installing 40.28
— Lower control arm
bushings 40.19
— Shock absorber
removing/installing 40.20
— Subframe
components 40.26
installing 40.28
removing 40.27
— Upper control arm
bushings 40.19
removing/installing 40.18a
— Wheel bearing
pressing 40.24
— Wheel bearing housing
assembly 40.23
removing/installing 40.17
— Wheel hub
assembly 40.23
pressing 40.24

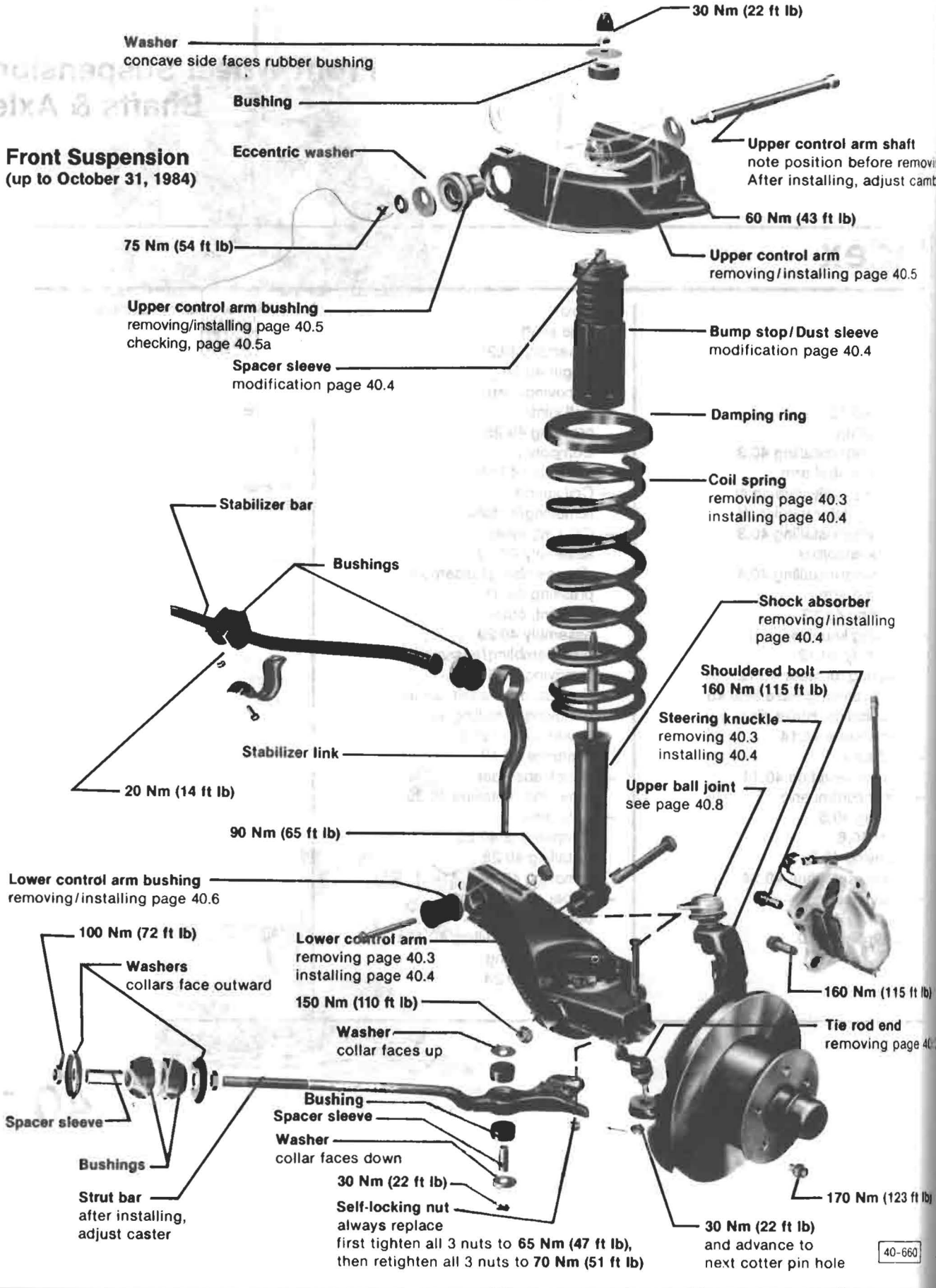
30 Nm (22 ft lb)
Washer
concave side faces rubber bushing
Bushing
Front Suspension
(up to October 31, 1984)
Eccentric washer
Upper control arm shaft
note position before removing
After installing, adjust camber
60 Nm (43 ft lb)
75 Nm (54 ft lb)
Upper control arm
removing/installing page 40.5
Upper control arm bushing
removing/installing page 40.5
checking, page 40.5a
Bump stop/Dust sleeve
modification page 40.4
Spacer sleeve
modification page 40.4
Damping ring
Coil spring
removing page 40.3
installing page 40.4
Stabilizer bar
Bushings
Shock absorber
removing/installing
page 40.4
Shouldered bolt
160 Nm (115 ft lb)
Steering knuckle
removing 40.3
installing 40.4
Stabilizer link
20 Nm (14 ft lb)
Upper ball joint
see page 40.8
90 Nm (65 ft lb)
Lower control arm bushing
removing/installing page 40.6
100 Nm (72 ft lb)
Washers
collars face outward
Lower control arm
removing page 40.3
installing page 40.4
160 Nm (115 ft lb)
150 Nm (110 ft lb)
Washer
collar faces up
Tie rod end
removing page 40
Spacer sleeve
Bushing
Spacer sleeve
Washer
collar faces down
Bushings
30 Nm (22 ft lb)
170 Nm (123 ft lb)
Strut bar
after installing,
adjust caster
Self-locking nut
always replace
first tighten all 3 nuts to 65 Nm (47 ft lb),
then retighten all 3 nuts to 70 Nm (51 ft lb)
30 Nm (22 ft lb)
and advance to
next cotter pin hole
40-660

Strut bar bolts
(up to October 31, 1984)

When repairing front axle always install spring washer under bolt head

Note

Do not install spring washer under self-locking nut

WARNING

Do not re-use any fasteners that are worn or deformed in normal use. Many fasteners are designed to be used only once and become unreliable and may fail when used a second time. This includes, but is not limited to, nuts, bolts, washers, self-locking nuts or bolts, circlips and cotter pins. Always replace these fasteners with new parts.

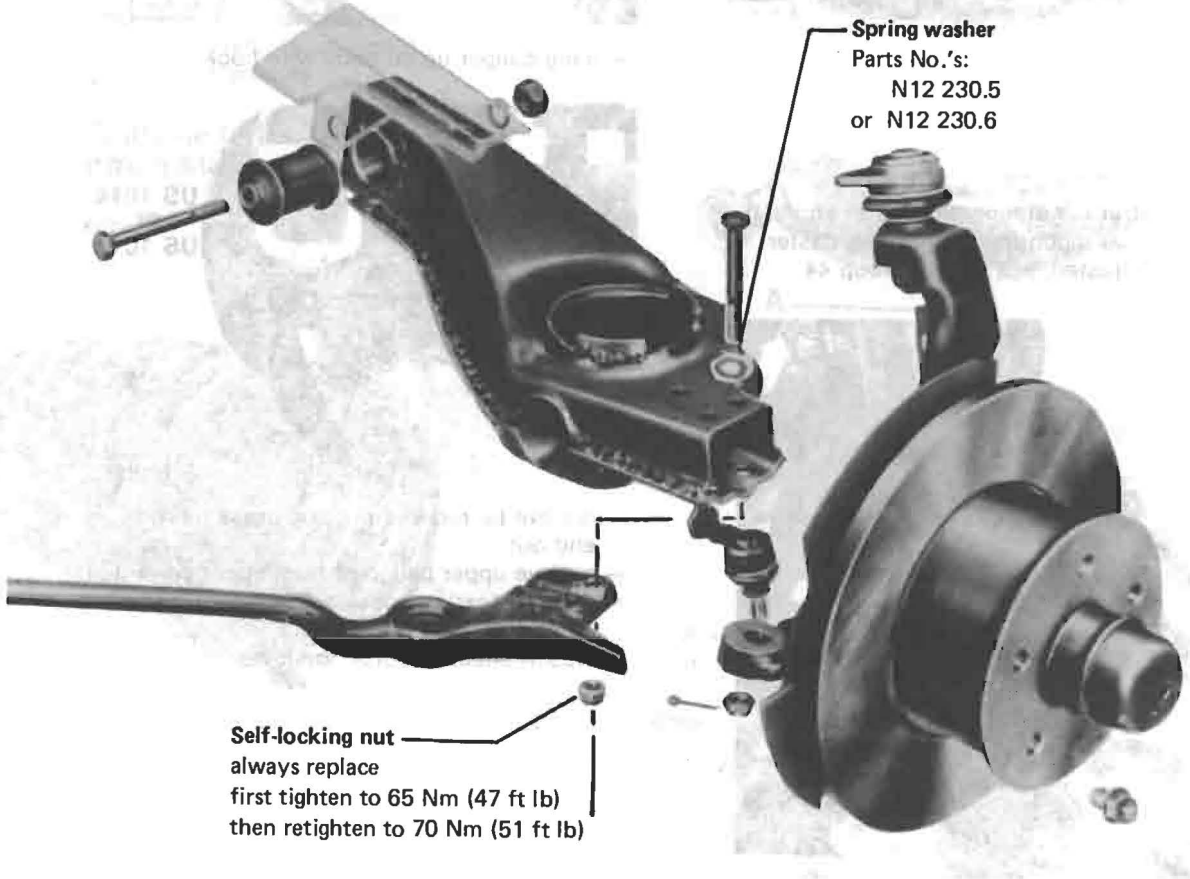

40-A006

Steering knuckle/coil spring/lower control arm, removing

Work sequence

— remove wheel
— remove stabilizer bar from strut bar

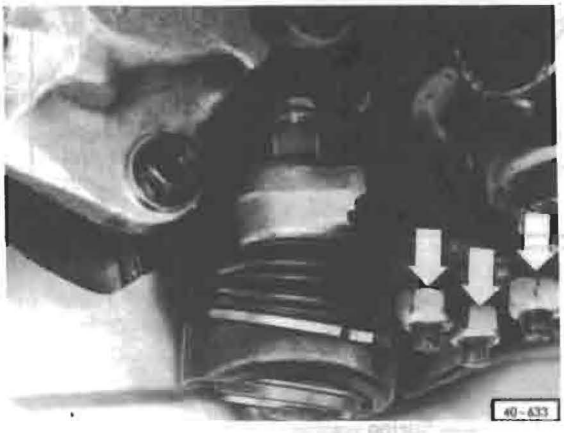

— remove nuts (arrows) holding strut bar, steering knuckle and lower control arm together

Note

Length of strut bar determines caster angle. If setting at body mounting is changed, caster must be readjusted, see Repair Group 44



— remove brake caliper and brake hose bracket (arrows)

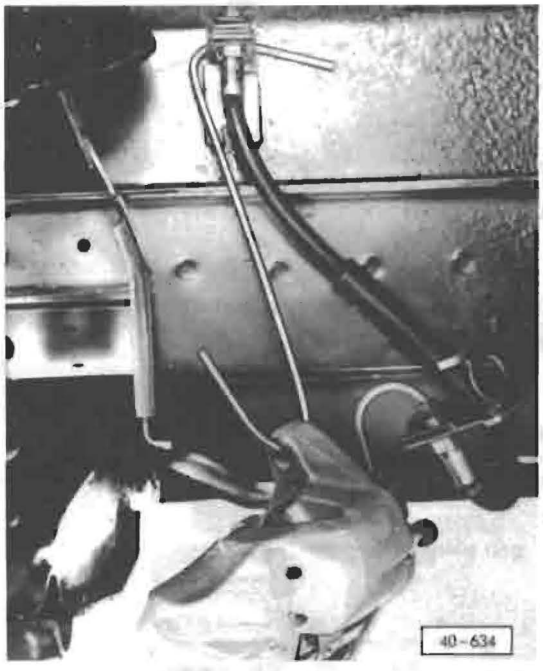

— hang caliper up on body with hook

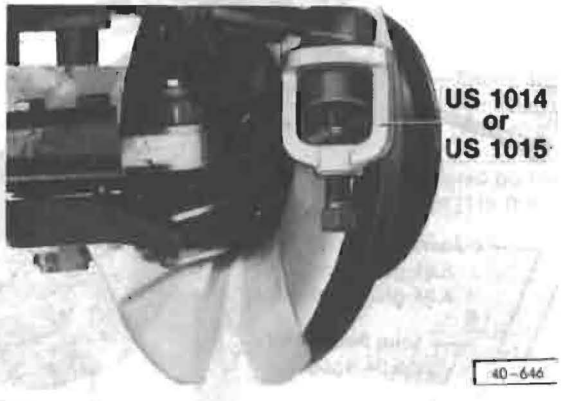

— remove tie rod end nut and press tie rod end out
— remove upper ball joint from upper control arm
— detach steering knuckle from upper and lower control arms
— loosen shock absorber on lower control arm

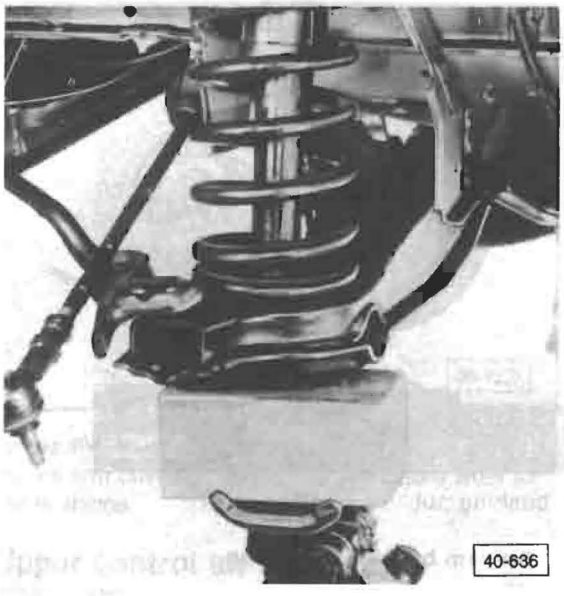

— support lower control arm with jack, and pull shock absorber bolt out of lower control arm
— lower jack slowly and remove coil spring
— remove control arm from body

Steering knuckle/coil spring/lower control arm, installing

Work sequence

— install control arm

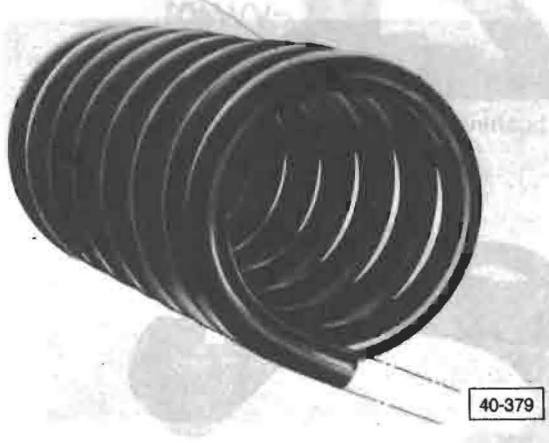

— check correct position of spring (straight end of spring must be at bottom)
— attach damping ring to top of spring with tape
— install coil spring in correct position (lower end of spring in depression in control arm)

— lift control arm with jack and attach shock absorber to control arm
— attach steering knuckle to control arm. At lower connection, strut bar must also be attached
— install stabilizer bar, tie rod and brake caliper
— reinstall wheel

Shock absorber, removing/installing

— remove shock absorber from control arm at bottom
— lower vehicle onto wheels and pull shock absorber bolt out of control arm
— lift vehicle
— remove shock absorber from body and install new shock absorber to body
— lower vehicle and tighten shock absorber to control arm

Note

When lifting vehicle without shock absorber, avoid damage to upper ball joint.

Bump stop/dust sleeve and spacer sleeve, modification

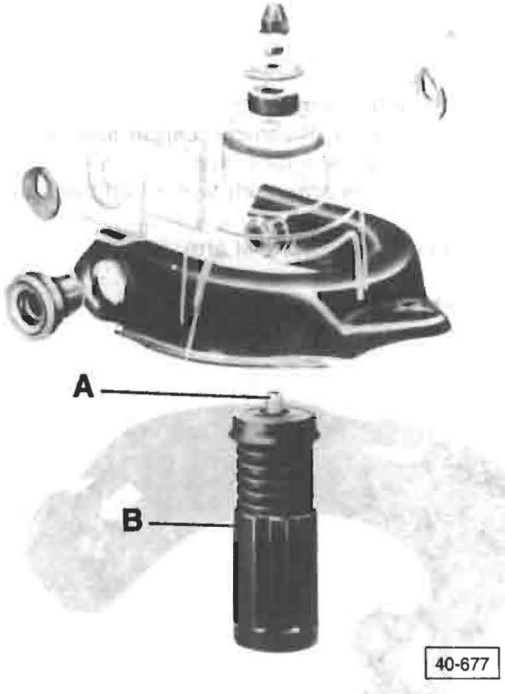

A = spacer sleeve
B = bump stop/dust sleeve

Note

From **VIN 25A 007 7959**, following parts have been modified:

- new spacer sleeve (length 28.5 mm/1.122 in.), Part No. **251 413 439A**
- contact surfaces of bump stop and body

If new bump stop must be installed in vehicles up to **VIN 25A 007 7958**, spacer sleeve, length 24.5 mm (0.965 in.), Part No. **251 413 439B**, must be installed.

Upper control arm, removing

— remove wheel
— remove bolts holding upper ball joint to control arm
— swing steering knuckle carefully to one side
— remove control arm shaft and detach upper control arm

Upper control arm, installing

— attach control arm to body and note position of control arm shaft

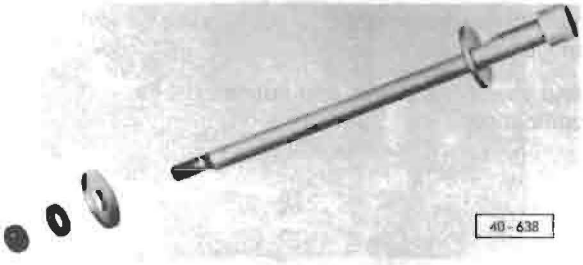

- flat on control arm shaft must be vertical and face center of vehicle. Larger side of eccentric washers face down

— lubricate control arm shaft with multi-purpose grease
— install ball joint in control arm

Upper control arm bushing, removing



— grind off spot welds (arrows)

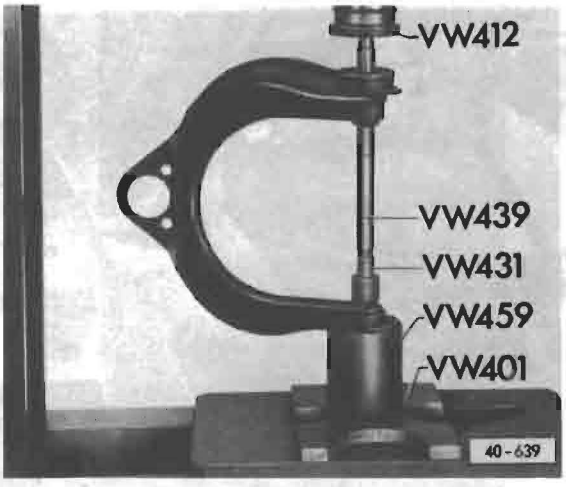

— press bushing out

Upper control arm bushing, installing

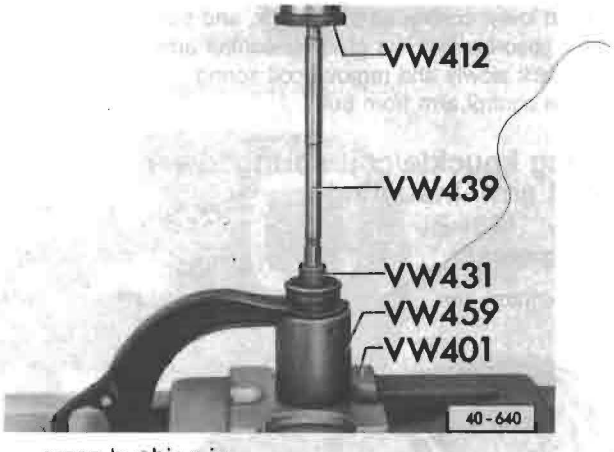

— press bushing in



— secure bushings with spot welds (arrows) to prevent them from turning
— clean up welds and paint

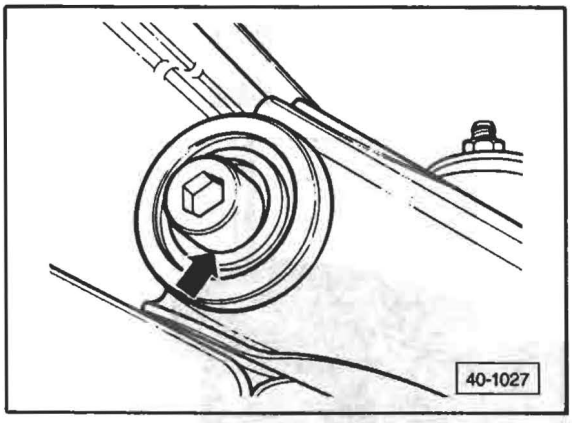

An insufficient seal at the outer ends of the upper control arm bushings can cause premature wear to the bushings.

Upper control arm bushings, checking

- both front wheels must be on ground
- bolt head (or nut/washer) must be positioned in center of bonded rubber bushing

If bolt head (or nut/washer) comes in contact with supporting ring (**arrow**), wear limit has been reached and bushing must be replaced.

Lower control arm bushing, removing/installing

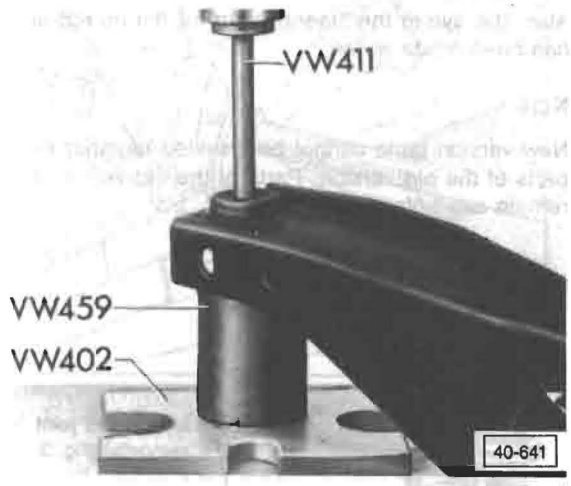

— press bushing out



— press bushing in

Front suspension modifications
(from November 1, 1984)

Beginning in November 1984, the sheet metal lower control arm has been replaced by a cast arm.

The strut bar, which was previously bolted to the arm with the ball joint adapter, is now screwed into the cast arm. The ball joint is installed directly in the arm and the adapter has been discontinued.

Also, the eye in the steering arm for the tie rod end has been made wider.

Note

New version parts cannot be installed together with parts of the old version. Parts of the old version will remain available.

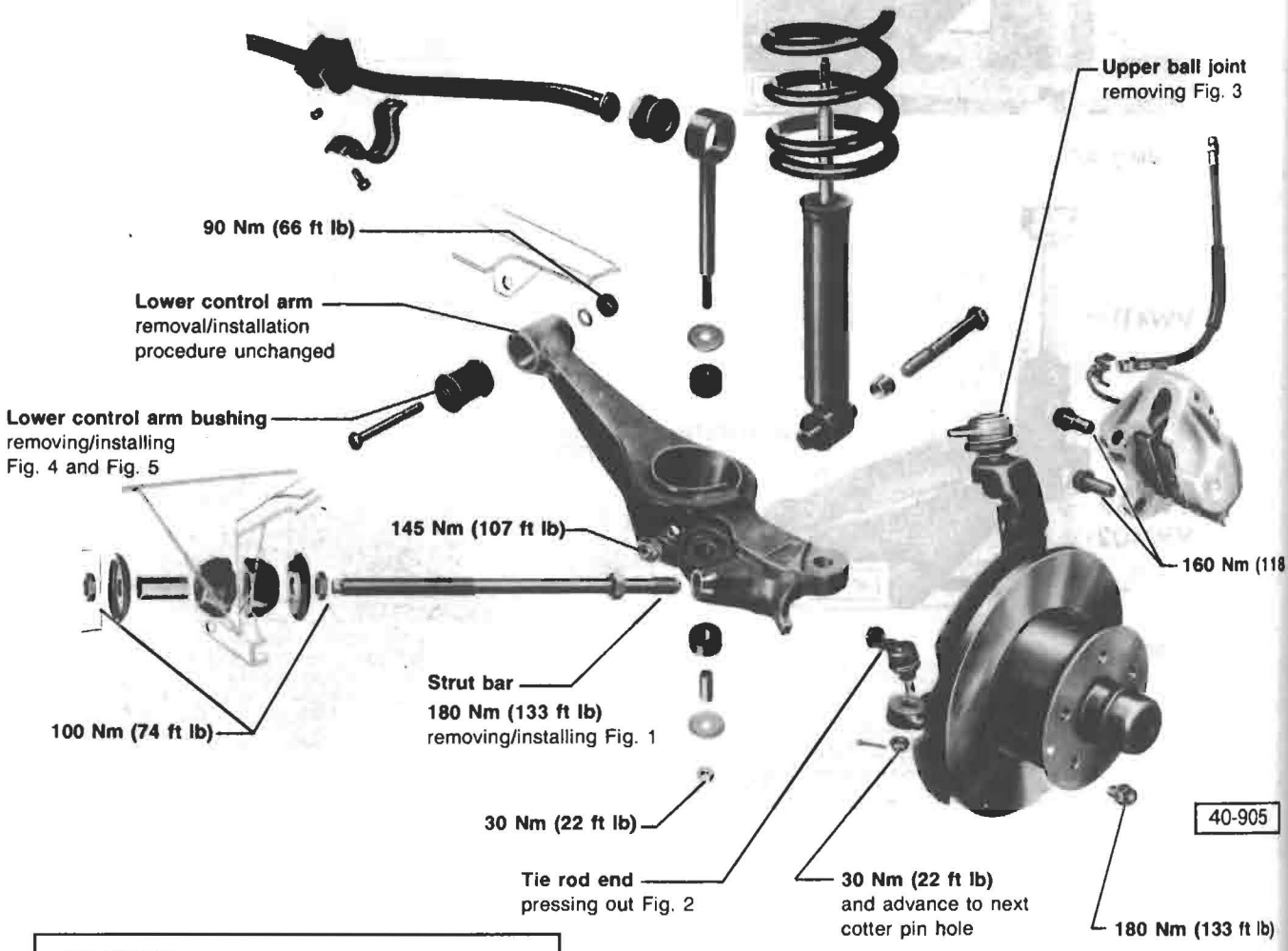

WARNING

Do not re-use any fasteners that are worn or deformed in normal use. Many fasteners are designed to be used only once and become unreliable and may fail when used a second time. This includes, but is not limited to, nuts, bolts, washers, self-locking nuts or bolts, circlips and cotter pins. Always replace these fasteners with new parts.

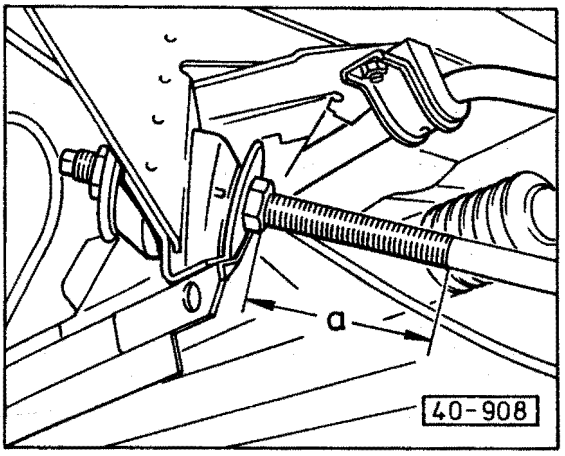

Fig. 1 Strut bar, removing/installing

— measure dimension **a** from end of thread to rear nut before removing

Note

When installing rod, the rear nut must be set to the old position or the caster angle reset.

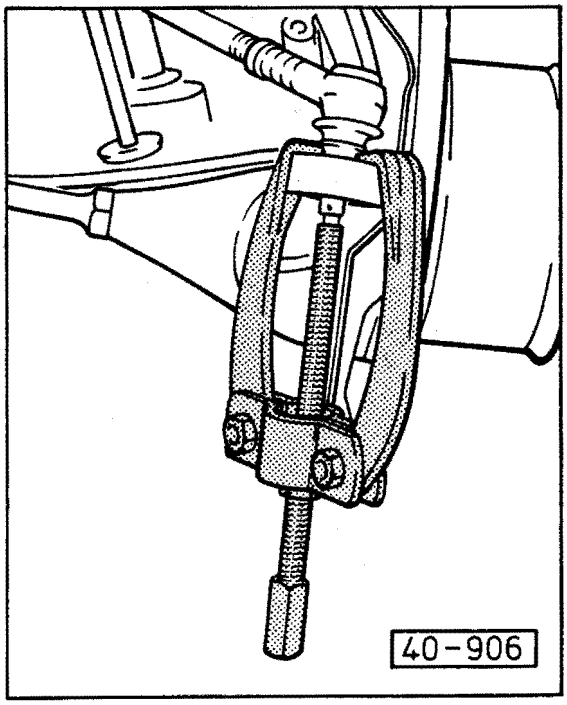

Fig. 2 Tie rod end, pressing out

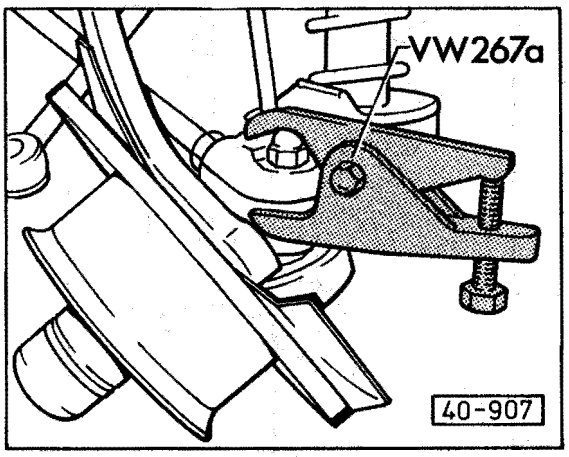

Fig. 3 Steering knuckle, removing

— press ball joints out of arms

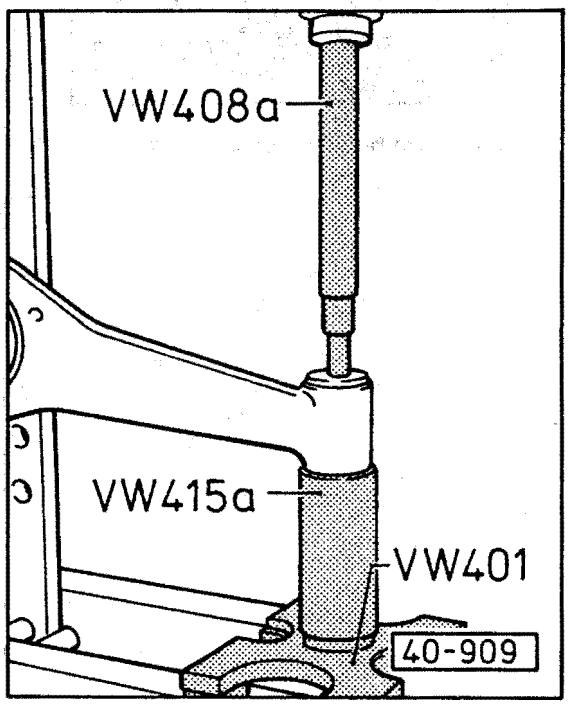

Fig. 4 Control arm bushing, pressing out

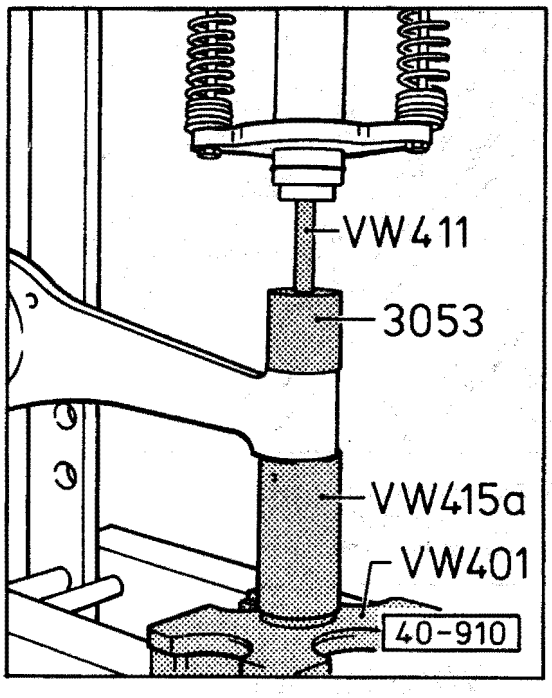

Fig. 5 Control arm bushing, pressing in

WARNING

Do not re-use any fasteners that are worn or deformed in normal use. Many fasteners are designed to be used only once and become unreliable and may fail when used a second time. This includes, but is not limited to, nuts, bolts, washers, self-locking nuts or bolts, circlips and cotter pins. Always replace these fasteners with new parts.

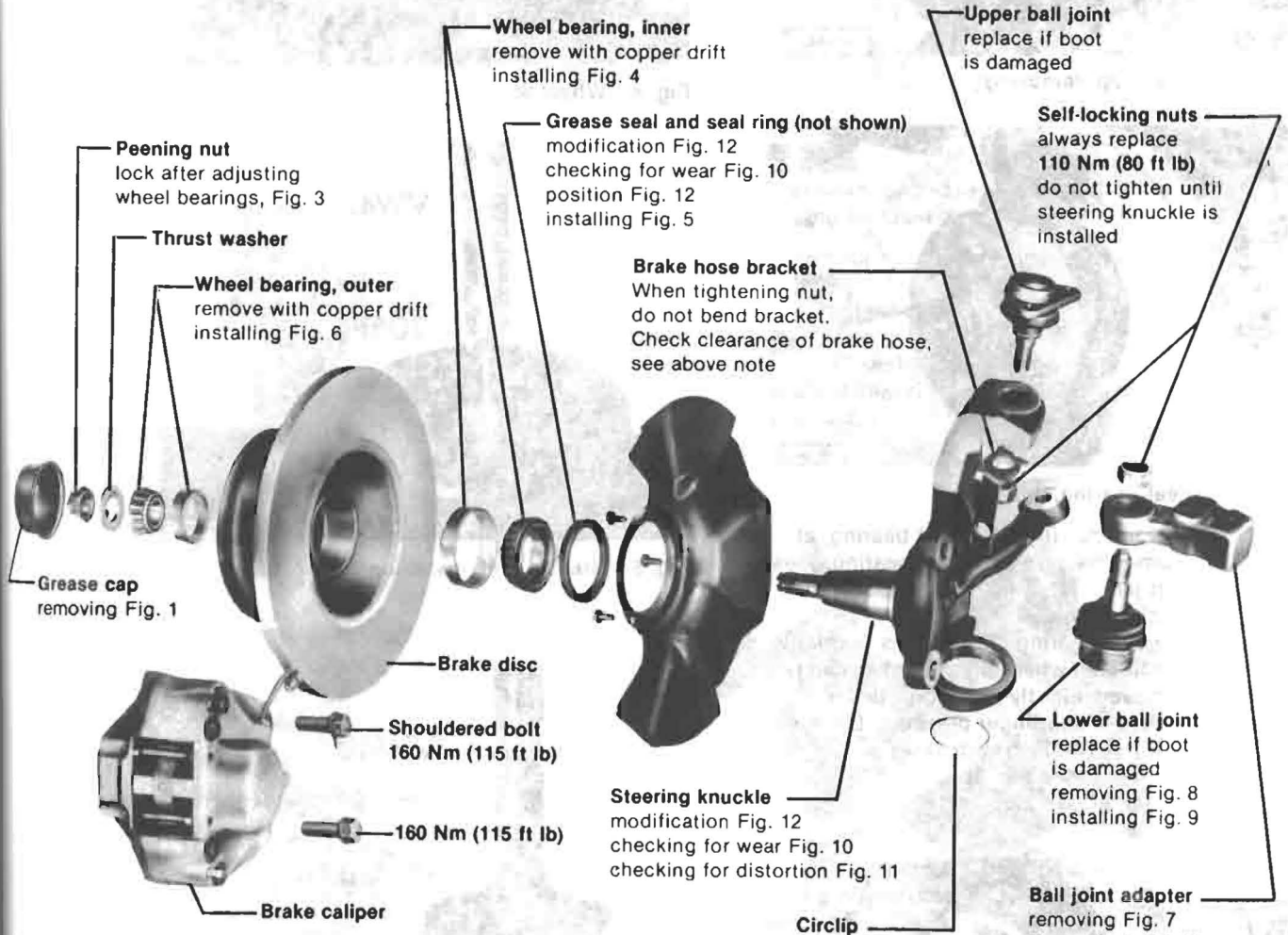

Note

If brake hose bracket is removed, clearance between wheel and hose must be checked when reinstalling. With wheels at full left and right locks, there must be a minimum clearance of 25 mm (1 in.). If not, bend bracket to adjust

40-647

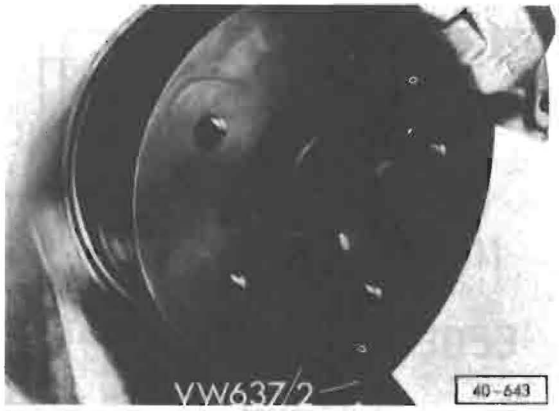

Fig. 1 Grease cap, removing

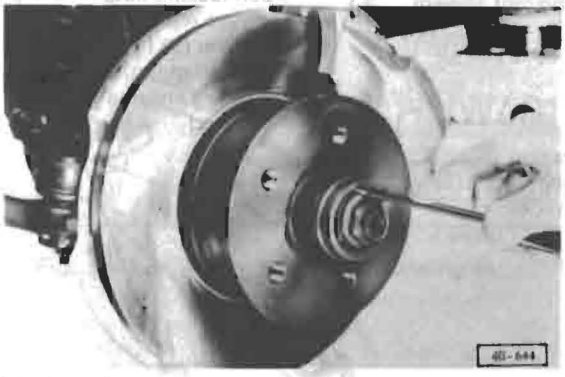

Fig. 2 Wheel bearing, adjusting

— tighten nut firmly to seat bearing, at same time turn wheel so bearing does not jam
— back off nut
• wheel bearing clearance is correctly adjusted when thrust washer can be moved slightly with screwdriver (arrow) and finger pressure. Do not pry or twist screwdriver
— peen nut (see Fig. 3)
— install grease cap

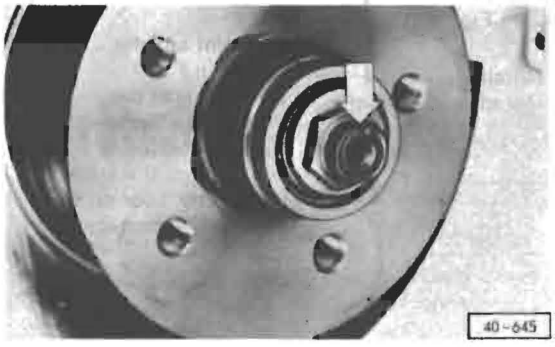

Fig. 3 Peening nut, locking

— peen nut on shoulder (arrow)
— do not reuse peened nut, always replace



Fig. 4 Wheel bearing (inner), installing outer race

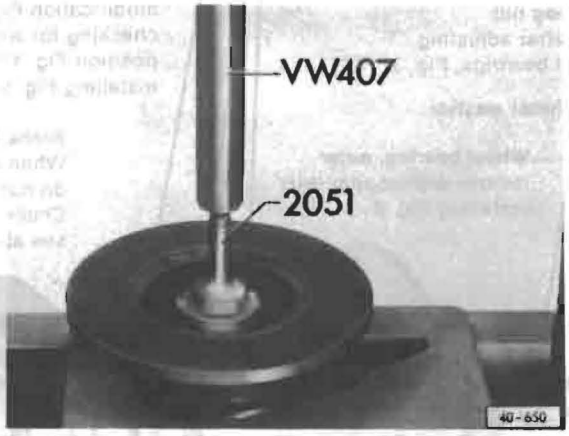

Fig. 5 Grease seal, installing

— press in flush

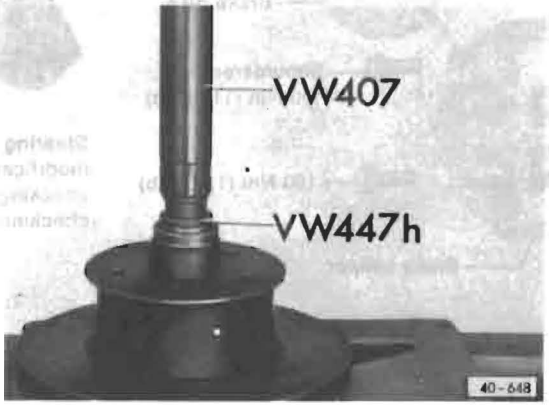

Fig. 6 Wheel bearing (outer), installing outer race

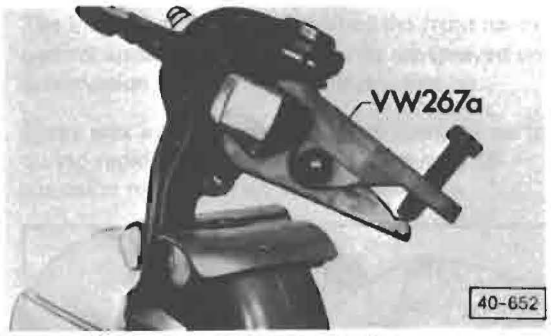

Fig. 7 Ball joint adapter, removing

— press lower ball joint adapter off lower ball joint
— press upper ball joint out with same tool

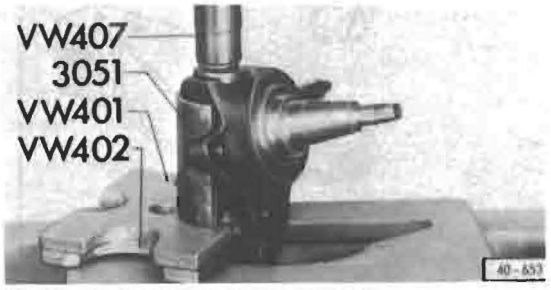

Fig. 8 Lower ball joint, removing

— remove circlip for ball joint
— press lower ball joint out of steering knuckle

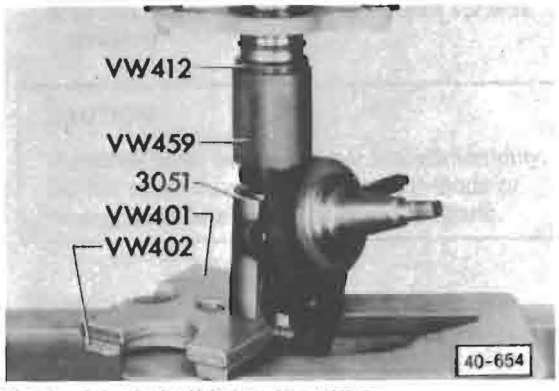

Fig. 9 Lower ball joint, installing

— press in, flat side of shoulder faces spindle
— attach adapter loosely to ball joint

Note

Do not tighten adapter fully. Adapter must be aligned with control arm when steering knuckle is installed; otherwise, rubber boot will be stretched and torn when steering is in full lock position

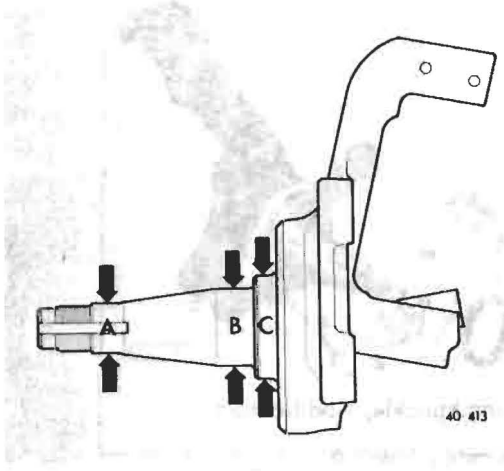

Fig. 10 Wheel bearing/grease seal seats, checking for wear

— check for scoring or ridges at these points
A = outer bearing seat
B = inner bearing seat
C = oil seal seat/seal ring
— replace seal ring or steering knuckle if necessary

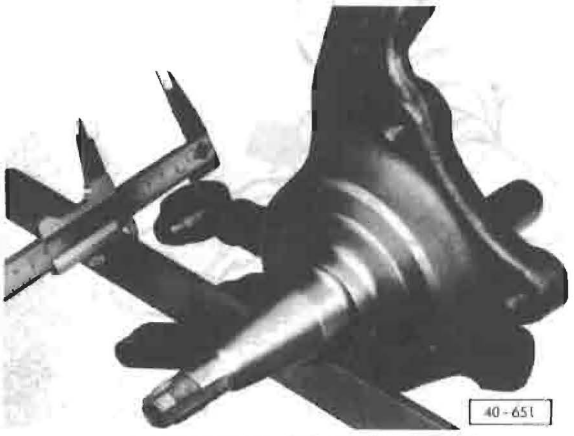

Fig. 11 Steering arm on steering knuckle, checking

• measurement must be: 54–56 mm (2.126–2.205 in.)

CAUTION

Bent steering knuckles must be replaced. Do not straighten

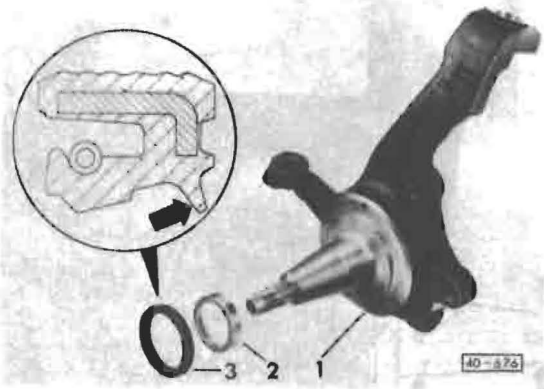

Fig. 12 Steering knuckle, modification

1 = steering knuckle
2 = seal ring (not shown on page 40.10)
3 = oil seal

- steering knuckle has a seal ring for grease seal
- if seal ring is scored, seal ring and grease seal must be replaced
- position of grease seal: dust lip (arrow) points away from seal lip

— fill up space between seal lips with multi-purpose grease

The internal portions (cavities) of the front lower control arms and rear trailing arms are sprayed with preservation wax during vehicle production.

Spray wax into the cavities of replacement parts during repairs to ensure the same quality of corrosion resistance as the original parts.

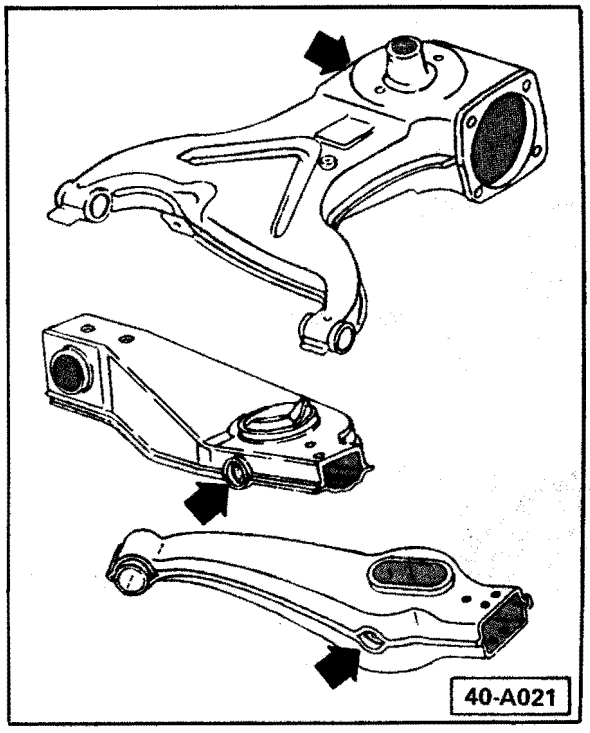

- arrows indicate openings to be used for wax spraying

CAUTION

Preserve parts with wax after installation only. Do not allow wax to get into bolt threads or mating surface areas of suspension parts.

Material

Cavity preservation wax
Part No. AKR 316 D38 10
or equivalent

Note

For a description of Volkswagen wax application equipment and its use, see Cavity and Underbody Preservation, service literature No. W42-701-004-1.

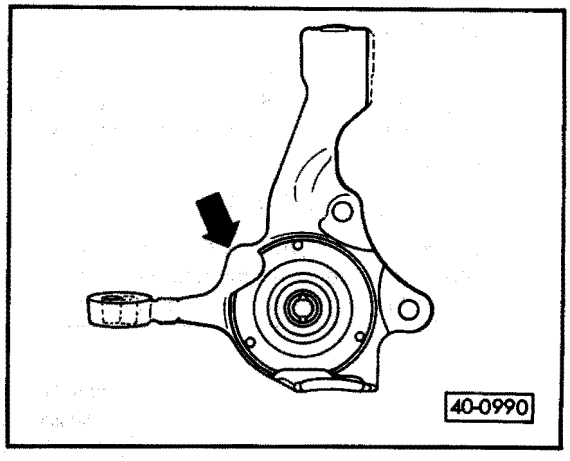

When installing replacement steering knuckles with the following Part Numbers:

251 407 311 AE
251 407 312 AE

contact could be made with the brake disc in the area indicated. (arrow)

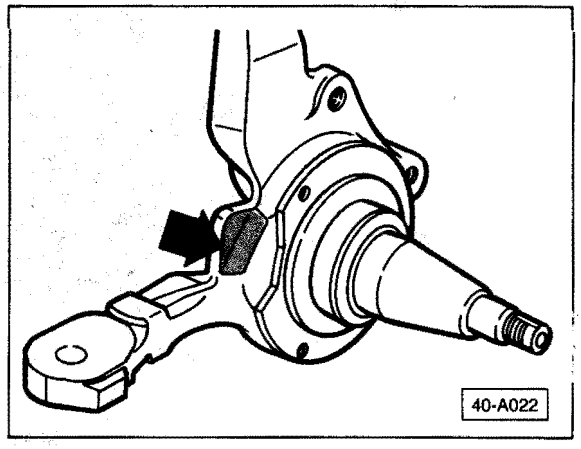

Grind down the cast lug on the steering knuckle approx. 8.0 to 10.0 mm (5/16 to 3/8 in.) to provide clearance for the brake disc. (arrow)

If necessary, also modify the splash plate, Part No. 251 407 343 C, to prevent contact in the same area.

CAUTION

Modified parts must not show scoring marks from grinding and must have smooth, rounded edges.

Paint parts after modification to provide protection against corrosion.

CAUTION

Welding or straightening procedures must not be performed on load bearing front suspension components and components that position the wheels.

Always replace self-locking nuts.

If vehicles that have an axle shaft removed must be moved, an outer joint must be installed to prevent damage to wheel bearing.

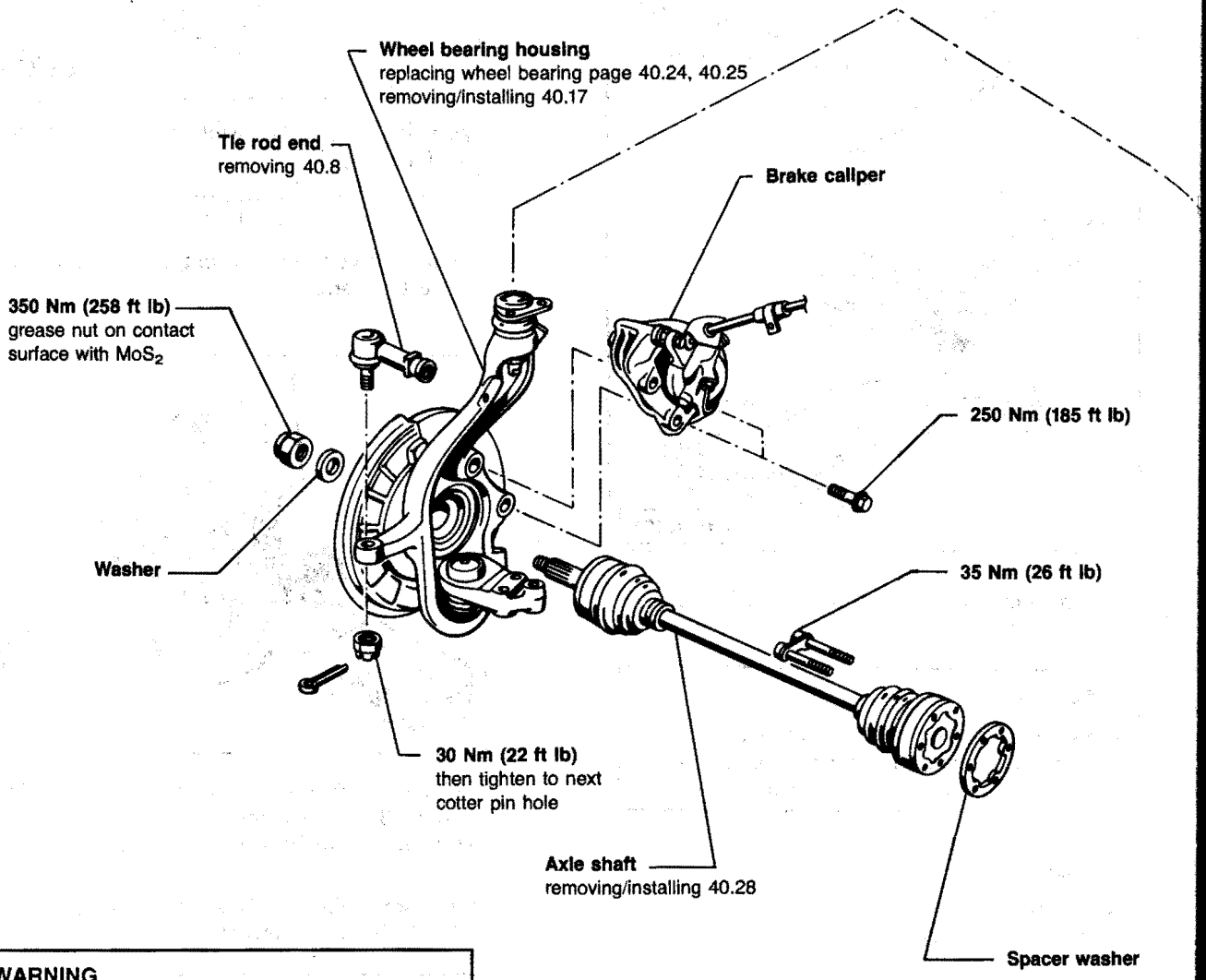

WARNING

Do not re-use any fasteners that are worn or deformed in normal use. Many fasteners are designed to be used only once and become unreliable and may fail when used a second time. This includes, but is not limited to, nuts, bolts, washers, self-locking nuts or bolts, circlips and cotter pins. Always replace these fasteners with new parts.

40-A023

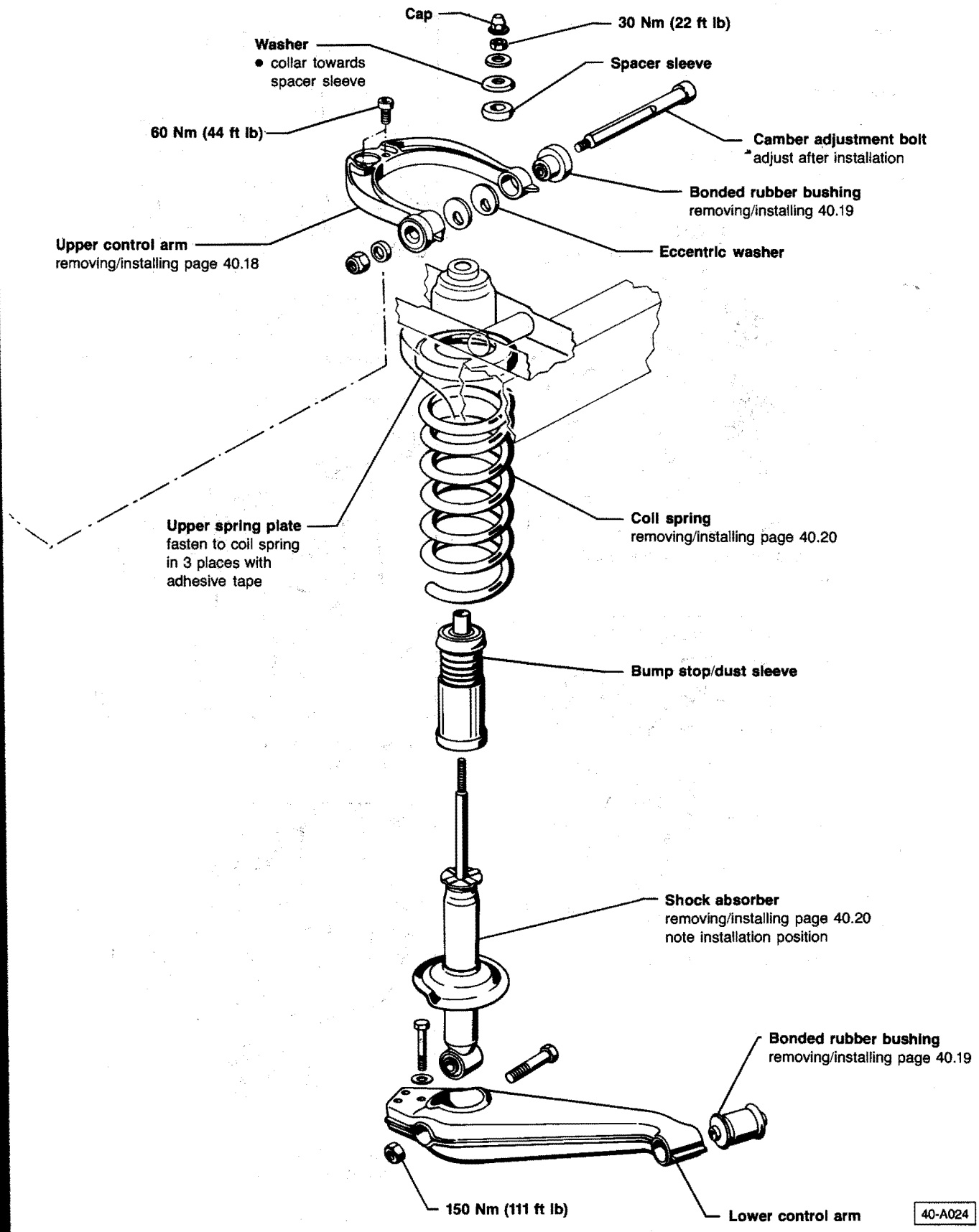
Cap
30 Nm (22 ft lb)
Washer
• collar towards spacer sleeve
Spacer sleeve
60 Nm (44 ft lb)
Camber adjustment bolt
* adjust after installation
Bonded rubber bushing
removing/installing 40.19
Upper control arm
removing/installing page 40.18
Eccentric washer
Upper spring plate
fasten to coil spring in 3 places with adhesive tape
Coil spring
removing/installing page 40.20
Bump stop/dust sleeve
Shock absorber
removing/installing page 40.20
note installation position
Bonded rubber bushing
removing/installing page 40.19
150 Nm (111 ft lb)
Lower control arm
40-A024

40-A023

Wheel bearing housing, removing/installing

Work sequence

Removing

— remove axle nut (vehicle on wheels)
— remove wheel

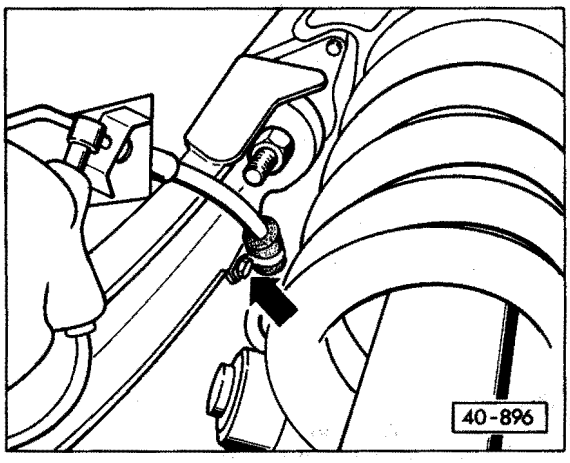

— remove brake line bracket from wheel bearing housing (**arrow**)

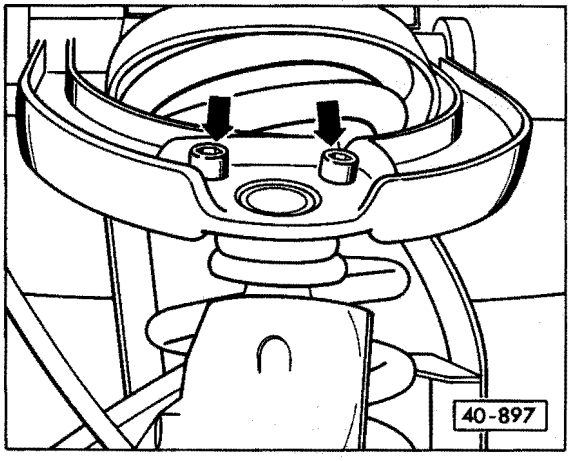

— remove upper ball joint from control arm by removing bolts (**arrows**)

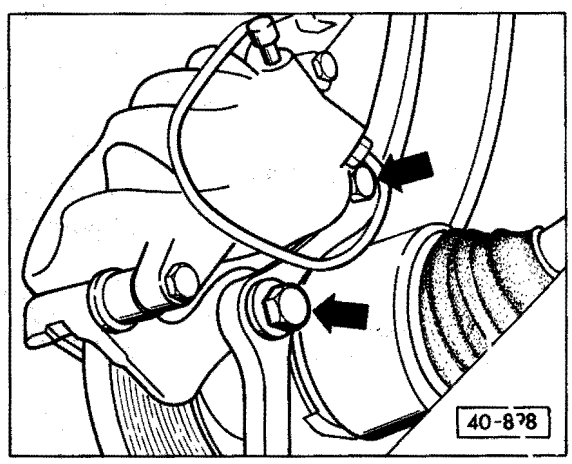

— remove brake caliper (**arrows**) and tie to body

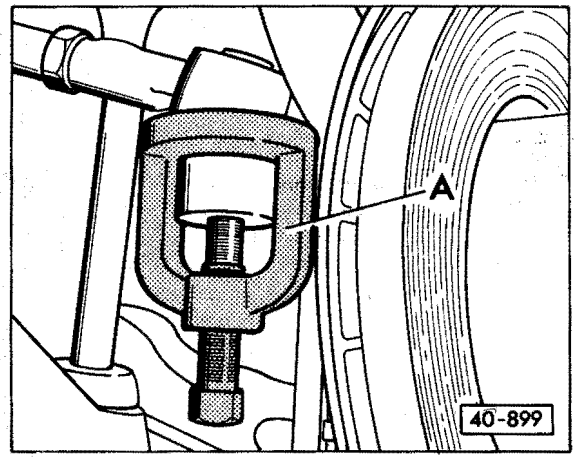

— press tie rod end out
A = US 1014

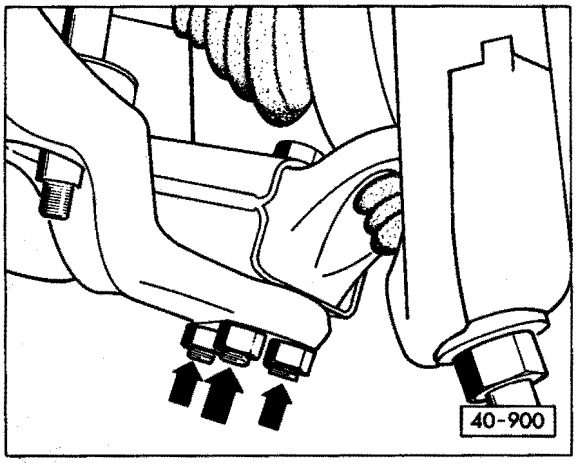

— remove bolts (**arrows**) and separate radius rod, wheel bearing housing and lower control arm

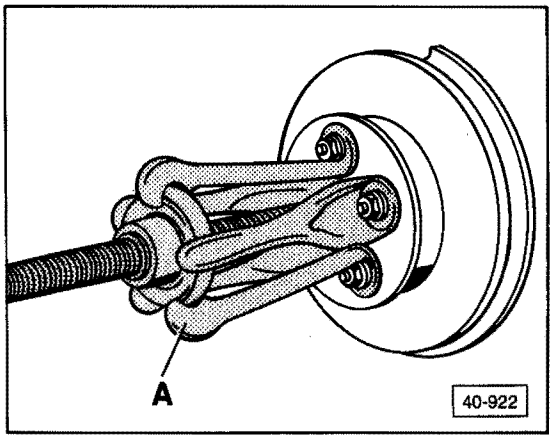

— press axle shaft out of wheel hub
A = standard commercial puller

Note

If a suitable commercial puller is not available, remove wheel bearing housing together with axle shaft. Press out axle shaft.

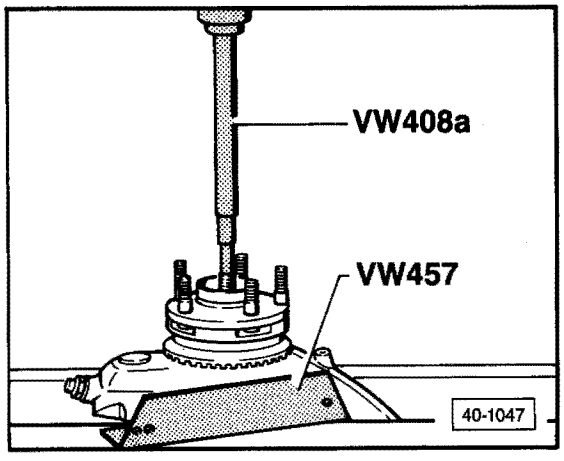

CAUTION

Always remove stub axle with mechanical or hydraulic hub puller **only**. Do **not** heat up wheel bearing housing or wheel bearing will be damaged.

Installing

CAUTION

Splines on drive shaft and wheel hub must be free of oil, grease and old locking compound.

— apply locking compound **D6** around splines of outer CV joint in a bead approximately 20 mm (25/32 in.) wide

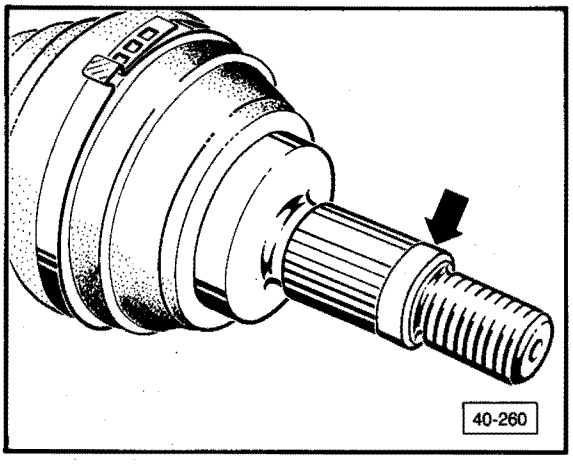

Remainder of installation procedure is the reverse of removal.

Note

Allow locking compound **D6** at least 60 minutes to harden before driving vehicle.

Upper control arm, removing/ installing

Work sequence

Removing

— remove wheel
— remove bolts attaching upper ball joint to control arm
— remove camber adjustment bolt and take out control arm

Installing

— fasten control arm to body

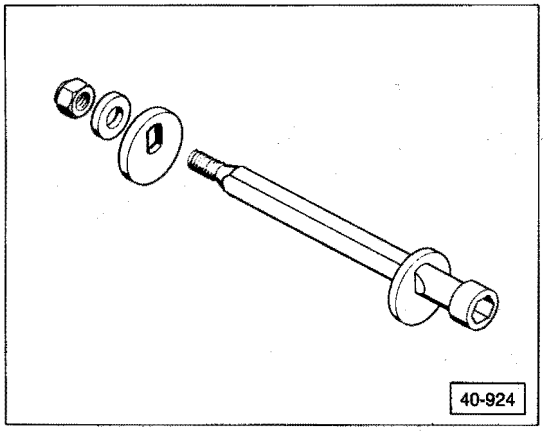

- installation position:
  flat surfaces of adjustment bolt must be vertical and larger side of eccentric washers downward

CAUTION

A maximum play of 0.5 mm (0.020 in.) is allowable on each side between the bonded rubber bushing in the control arm and the eccentric washer when the bolt is loosened.

The following eccentric washers are available to adjust the clearance:

Thickness	Part No.
4.0 mm	251 407 133 A
5.0 mm	251 407 133 B
5.5 mm	251 407 133 C

— lubricate camber adjustment bolt with all purpose grease
— attach upper ball joint to control arm

Lower control arm bonded rubber bushing, removing/installing

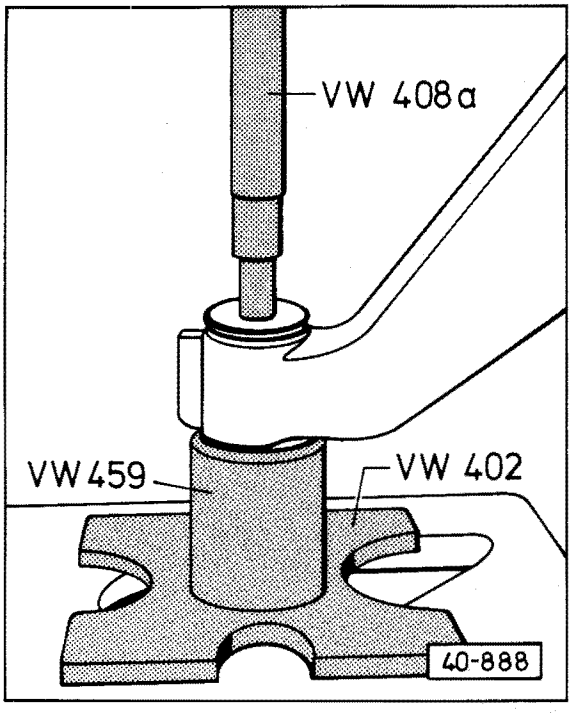

Bonded rubber bushing, pressing out

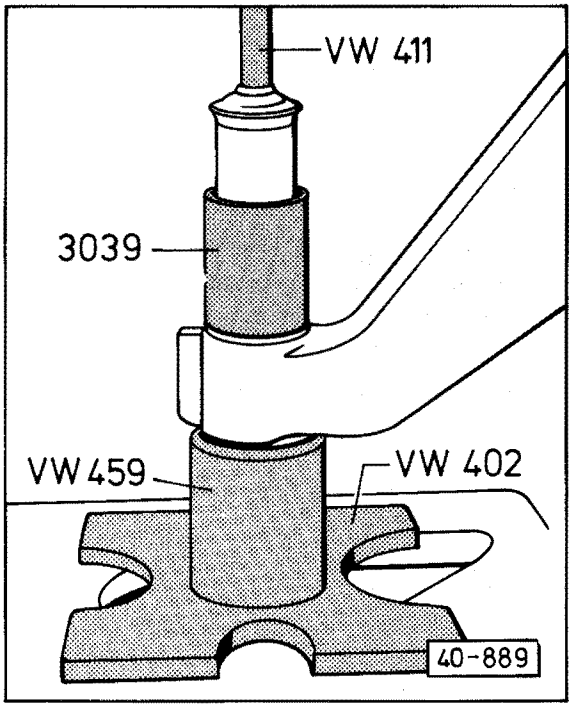

Bonded rubber bushing, pressing in

Upper control arm bonded rubber bushing, removing/installing

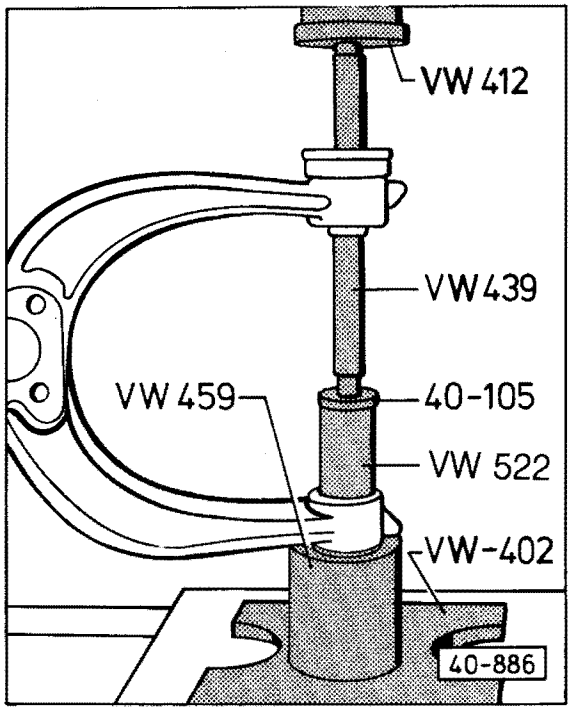

Bonded rubber bushing, pressing out

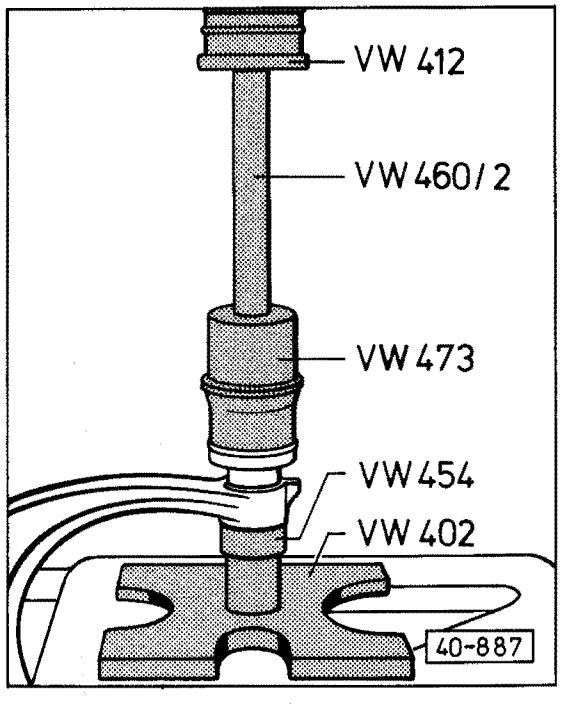

Bonded rubber bushing, pressing in

Coil spring/shock absorber, removing/installing

Work sequence

Removing

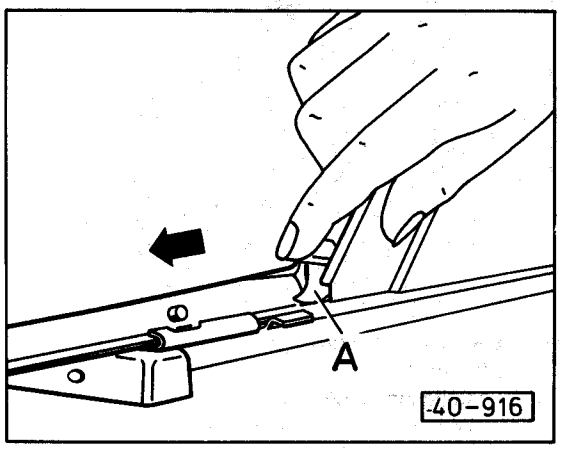

— depress lock catch **A**, push seat to full forward position and release lock catch

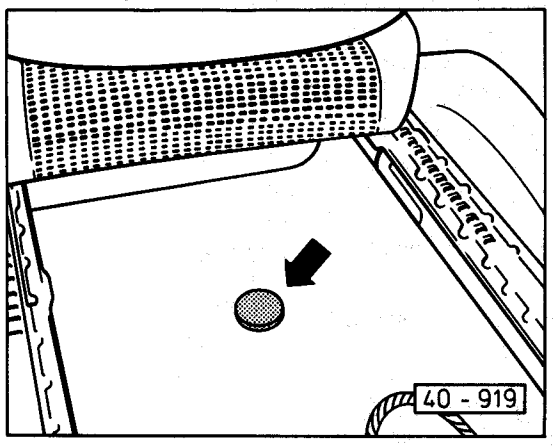

— pry out rubber plug (**arrow**) under seat
— remove wheel

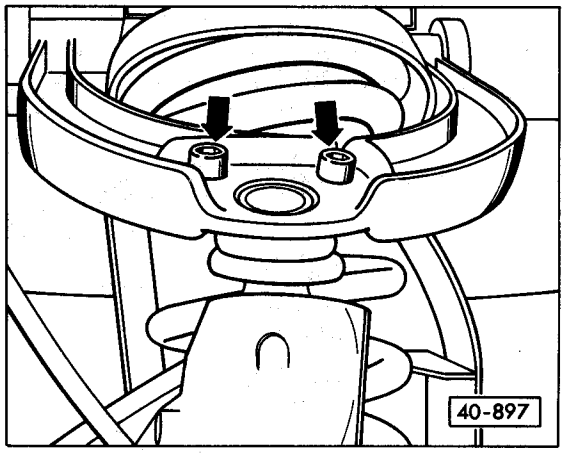

— remove upper ball joint from control arm (**arrows**)

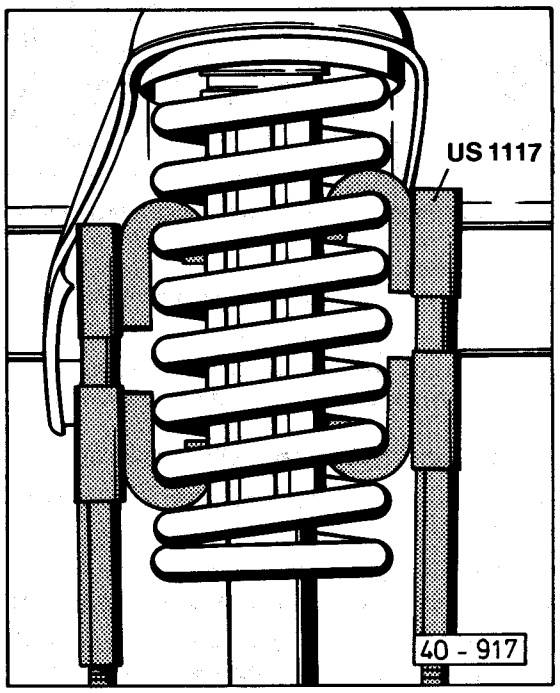

— attach spring compressor and compress spring

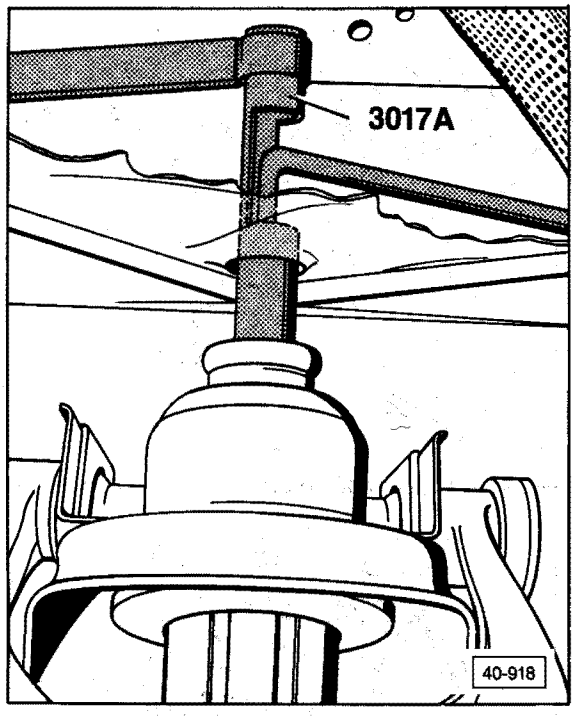

— remove shock absorber from upper attachment on body
— push piston rod down
— swing shock absorber and spring outward

— remove spring and spring plate
— remove bolt from shock absorber attachment to lower control arm and take shock absorber out

Notes on shock absorber testing/replacing

A defective shock creates a rumbling noise during driving.

Slight oil seepage from the shock is normal. If greater oil loss occurs, performance will be affected.

It will be possible to compress or extend a defective shock in increments, rather than with the smooth stroke characteristic of normal shock testing.

Shocks are maintenance-free and must be replaced rather than repaired. Shock absorber oil cannot be replenished.

Install only original replacement shock absorbers.

Shock absorbers of different manufacturers that have the same part number are interchangeable.

It is not necessary to replace both shock absorbers if only one is defective.

Installing

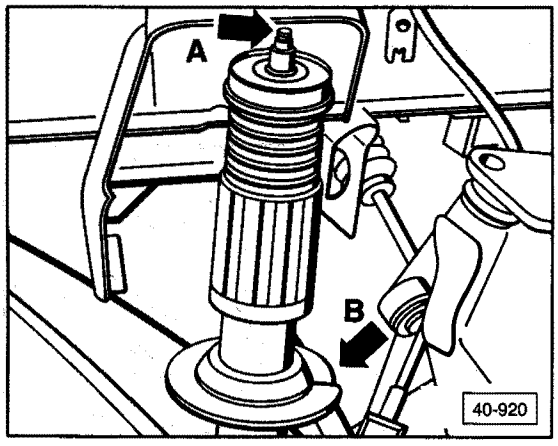

— install shock absorber to lower control arm and hand tighten nut
  • installation position
    right side: spring end stop **B** at front
    left side: spring end stop **B** at rear
— push piston rod **A** in enough for installation clearance
— install coil spring with lower spring end in spring end stop
  • installation position:
    evenly coiled end downwards
— fasten spring plate to top of spring with tape in at least 3 places
— swing shock absorber and spring inward

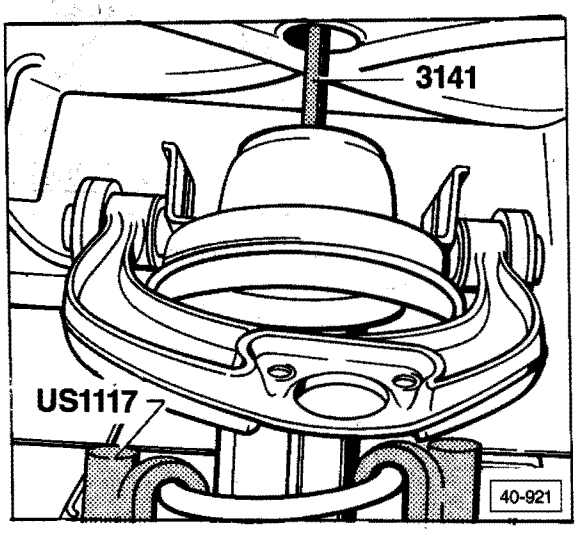

— insert T-handle wrench into piston rod through access hole

— pull piston rod upward
— tighten nut attaching shock absorber to lower control arm, to 150 Nm (110 ft lb)
— install upper ball joint to control arm and tighten to 60 Nm (44 ft lb)

— lift control arm with jack and remove spring compressor
— pull piston rod upward and remove T-handle wrench

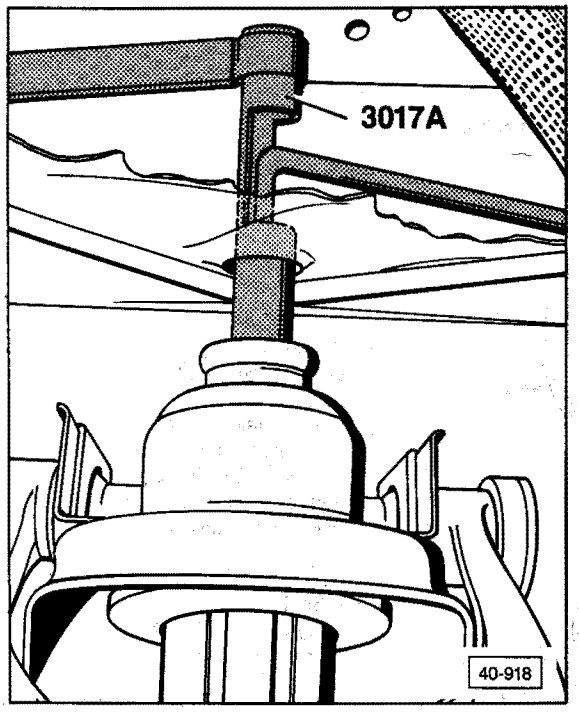

— attach shock absorber to body and tighten to 30 Nm (26 ft lb)

— insert plug in access hole
— reposition seat
— install wheel

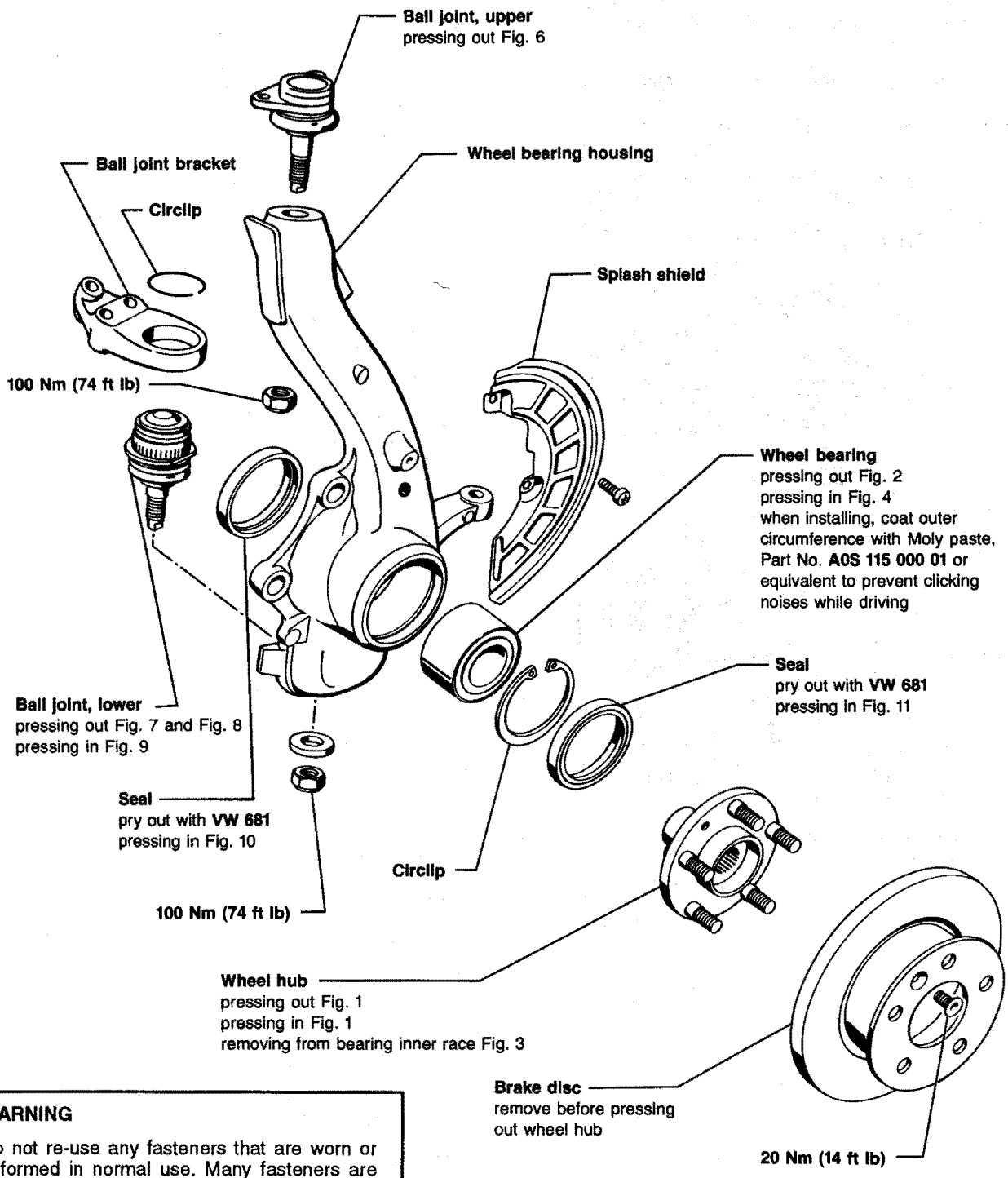

WARNING

Do not re-use any fasteners that are worn or deformed in normal use. Many fasteners are designed to be used only once and become unreliable and may fail when used a second time. This includes, but is not limited to, nuts, bolts, washers, self-locking nuts or bolts, circlips and cotter pins. Always replace these fasteners with new parts.

40-895

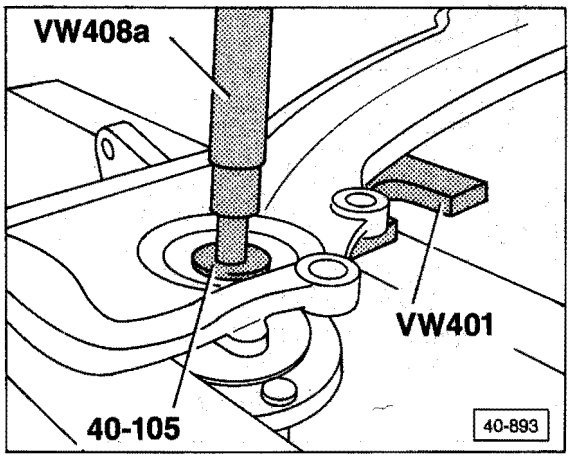

Fig. 1 Wheel hub, pressing out

Note

When pressing out hub, wheel bearing is destroyed.

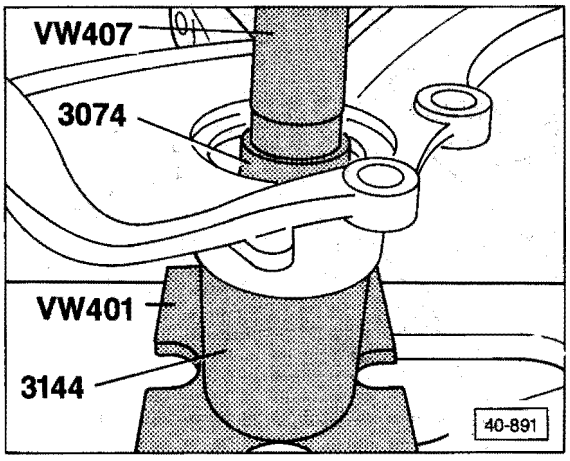

Fig. 2 Wheel bearing, pressing out

— remove oil seal first; replace
— remove circlip

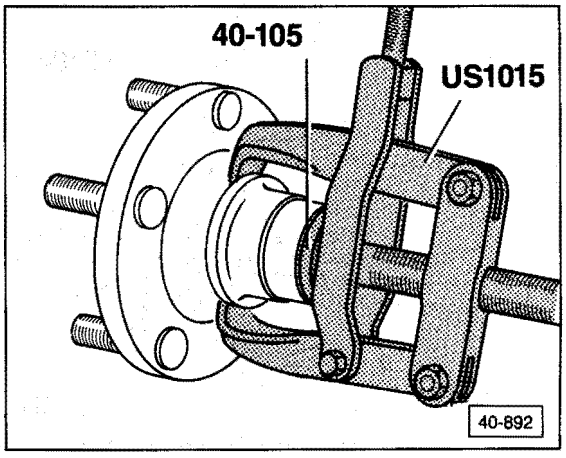

Fig. 3 Inner bearing race, pulling out

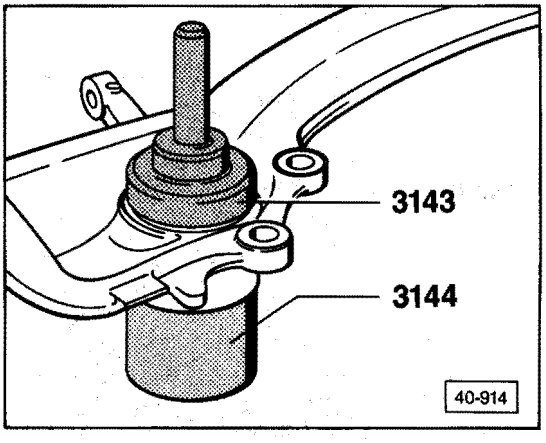

Fig. 4 Inner seal, driving in

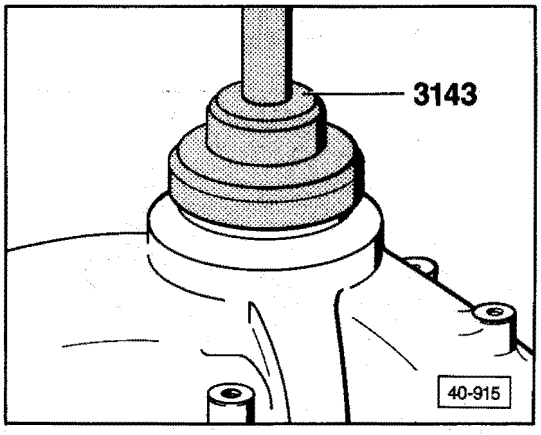

Fig. 5 Outer seal, driving in

40-895

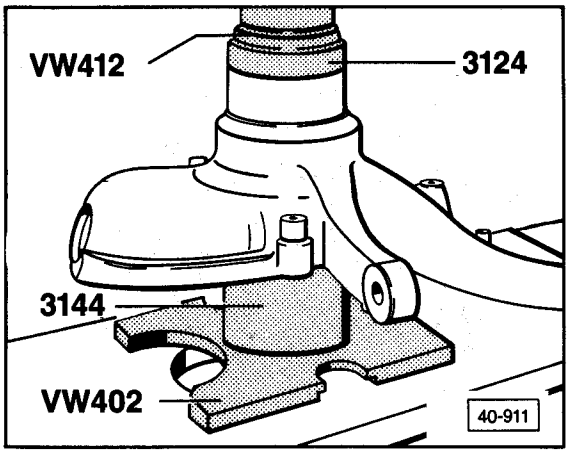

Fig. 6 Wheel bearing pressing in

— install circlip after pressing in wheel bearing

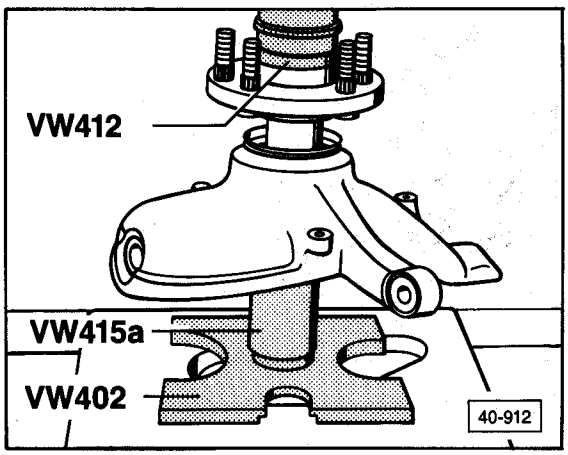

Fig. 7 Wheel hub, pressing in

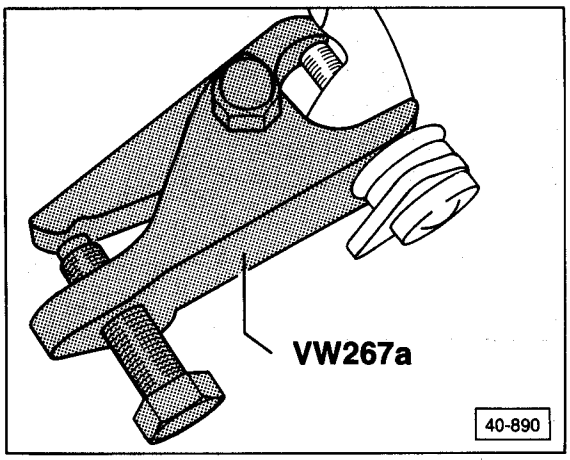

Fig. 8 Upper ball joint, pressing out

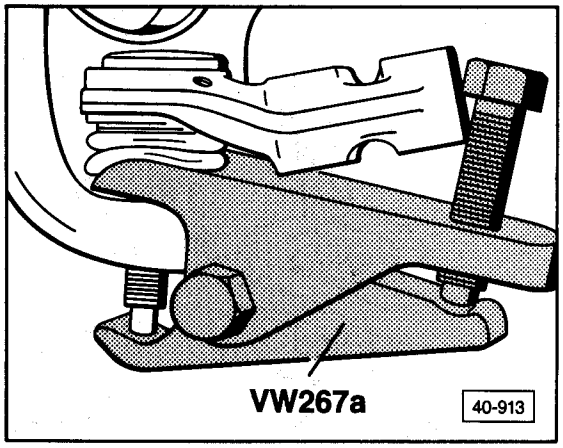

Fig. 9 Lower ball joint, pressing out of wheel bearing housing

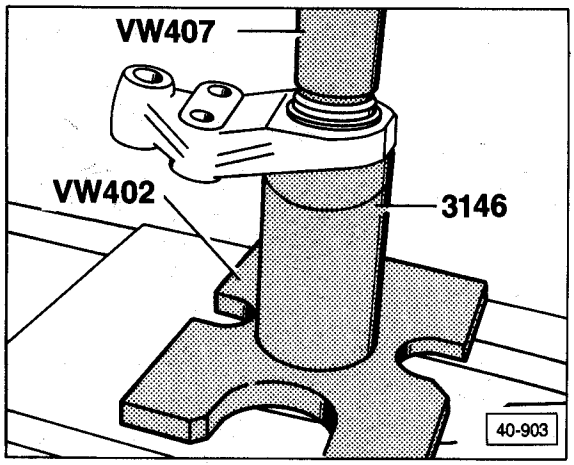

Fig. 10 Lower ball joint, pressing out of bracket

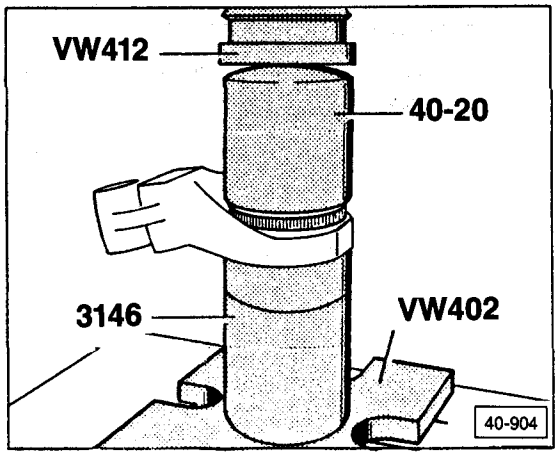

Fig. 11 Lower ball joint, pressing into bracket

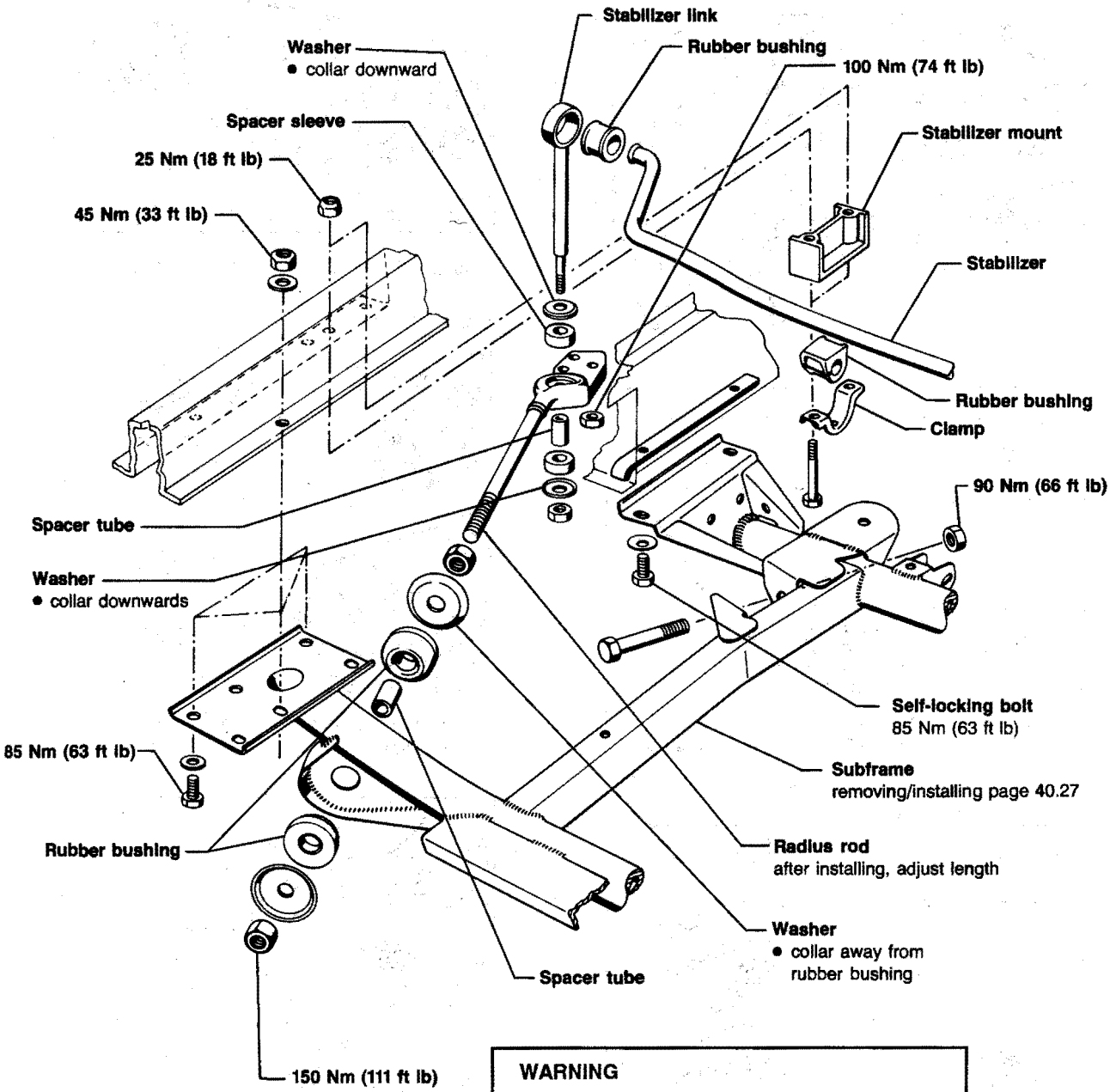

WARNING

Do not re-use any fasteners that are worn or deformed in normal use. Many fasteners are designed to be used only once and become unreliable and may fail when used a second time. This includes, but is not limited to, nuts, bolts, washers, self-locking nuts or bolts, circlips and cotter pins. Always replace these fasteners with new parts.

40-937

Subframe, removing/installing

Work sequence

Removing

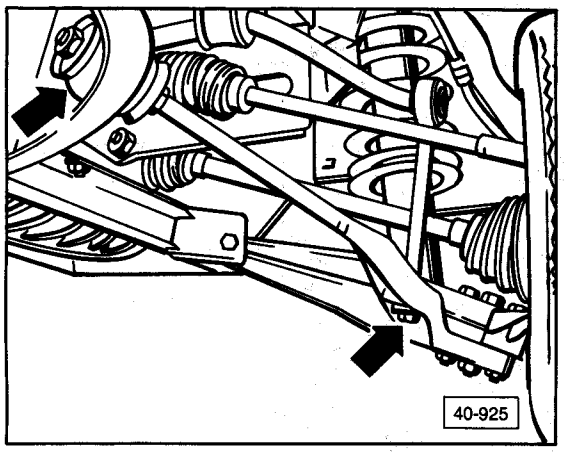

— remove radius rods from subframe and stabilizer (**arrows**)

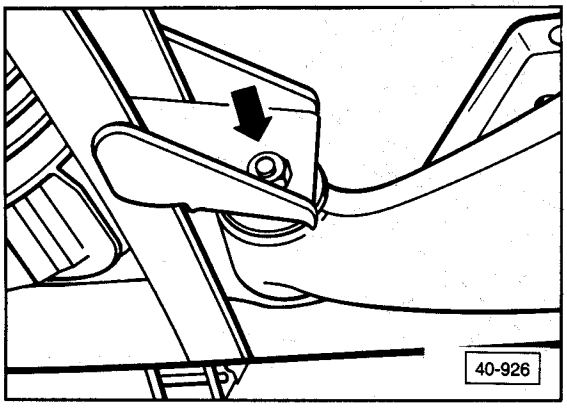

— remove control arm from subframe (**arrow**)

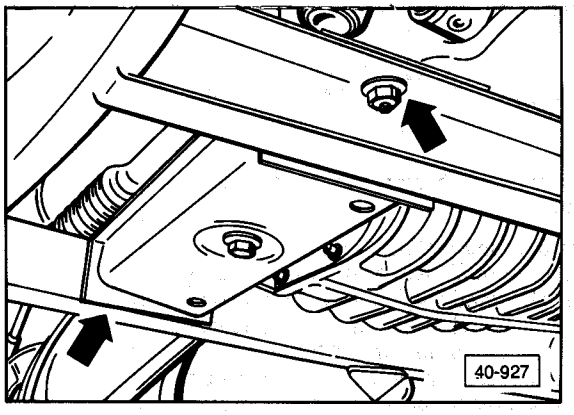

— remove final drive support from subframe (**arrows**)

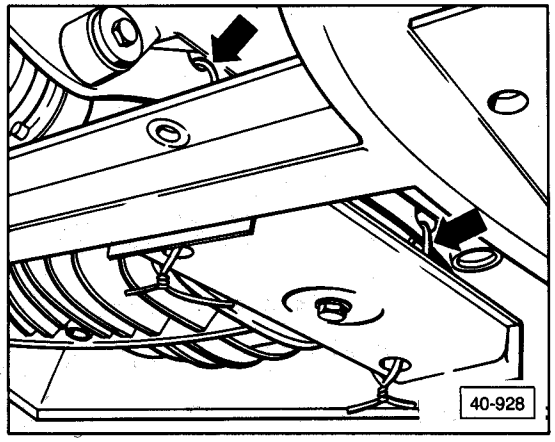

— fasten final drive support to body (**arrows**)

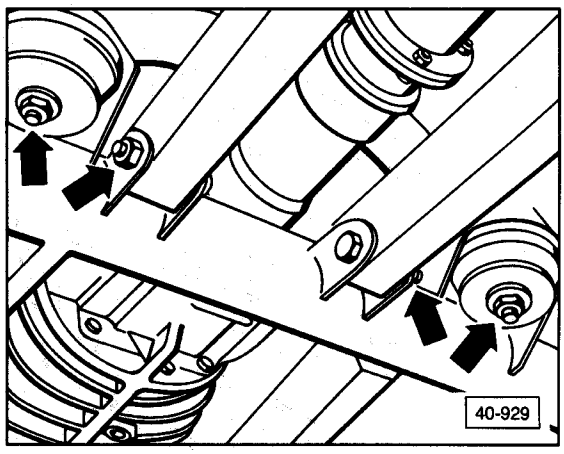

— remove protection bars and bonded rubber bushings (**arrows**)

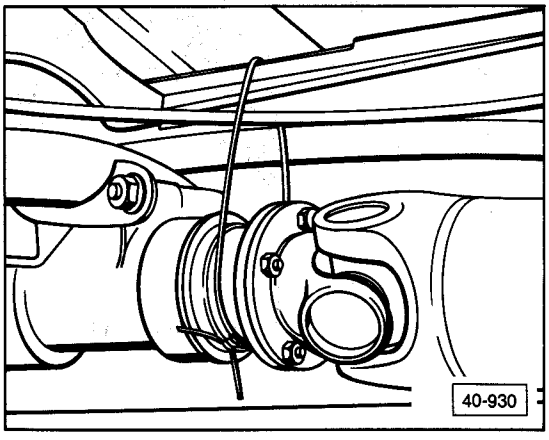

— tie up final drive

— use universal transmission jack to support subframe
— remove bolts that attach subframe to body
— carefully lower subframe and remove

Installing

Proceed in reverse order of removal and note the following:
— tighten bolts fastening subframe to body last (see page 40.26 for tightening torques)

Note

After installation of subframe, vehicle must be aligned. (see group 44)

Guards for drive shaft/engine, removing/installing

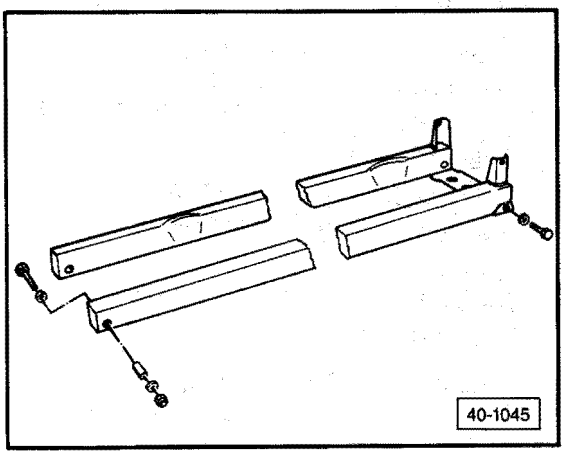

Note

Protection bars for drive shaft can be removed independently of the engine guard (skid plate).

— install protection bars with front and rear recesses to the right, as seen from the driving direction
• tighten to 45 Nm (33 ft lb)

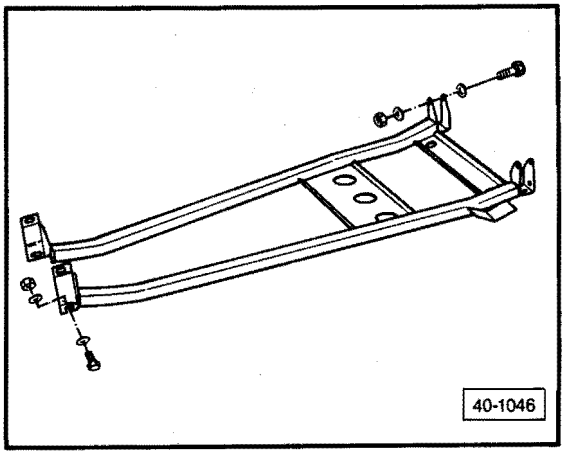

— remove and install engine guard (skid plate)
• tighten to 45 Nm (33 ft lb)

Front axle shaft, removing/installing

Removing

The axle shaft cannot be removed without first loosening the wheel bearing housing. It is practical, therefore, to remove the axle shaft and the wheel bearing housing together, then press out the axle shaft.

Refer also to **Wheel bearing housing, removing.**

Installing

Refer to **Wheel bearing housing, installing.**

Note

When replacing CV joint boots, grease joint if necessary.
inner: 45 grams G6.3 grease each side (total 90)
outer: 90 grams G6.3 grease

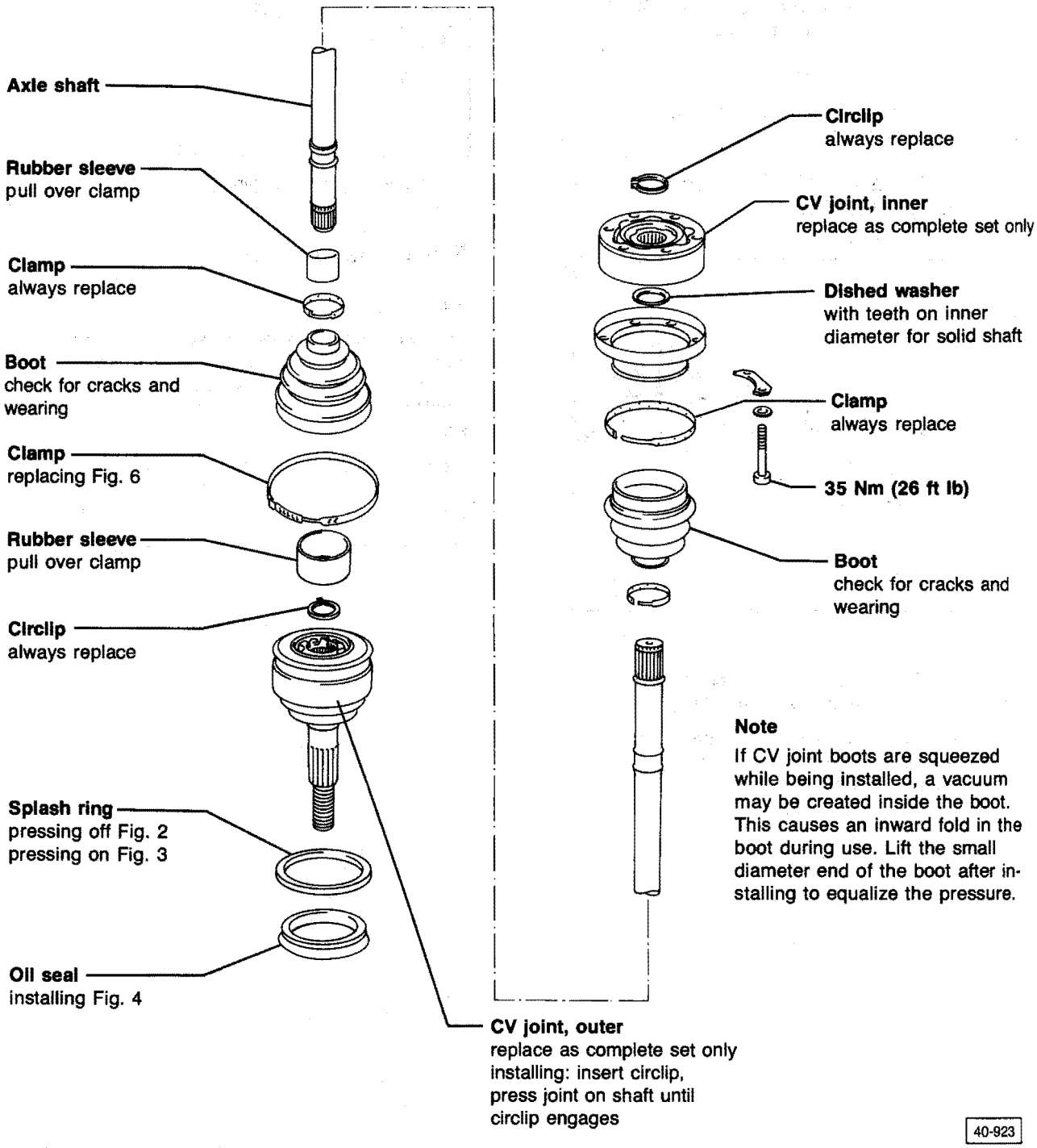

Note

If CV joint boots are squeezed while being installed, a vacuum may be created inside the boot. This causes an inward fold in the boot during use. Lift the small diameter end of the boot after installing to equalize the pressure.

40-923

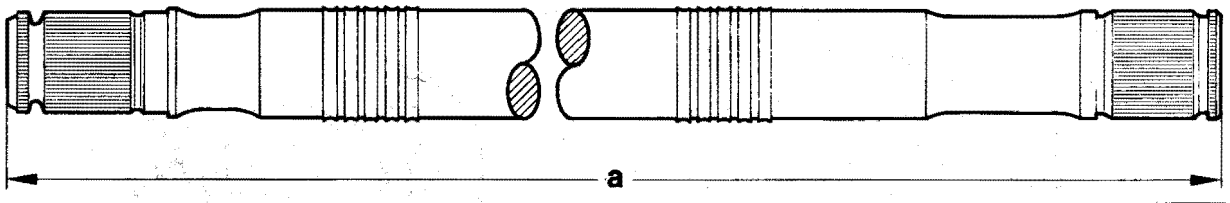

Fig. 1 Axle shaft length

Transmission	Measurement a	
	right side	left side
all	570 mm (22.440 in.)	570 mm (22.440 in.)

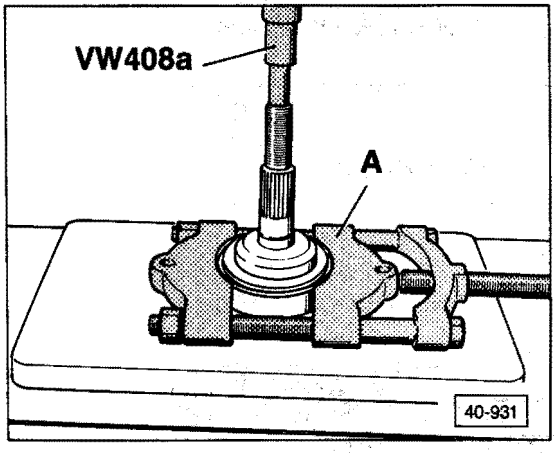

Fig. 2 Splash ring, pressing off

— use separating fixture with aperture of 22-115 mm (7/8-4.5 in.)

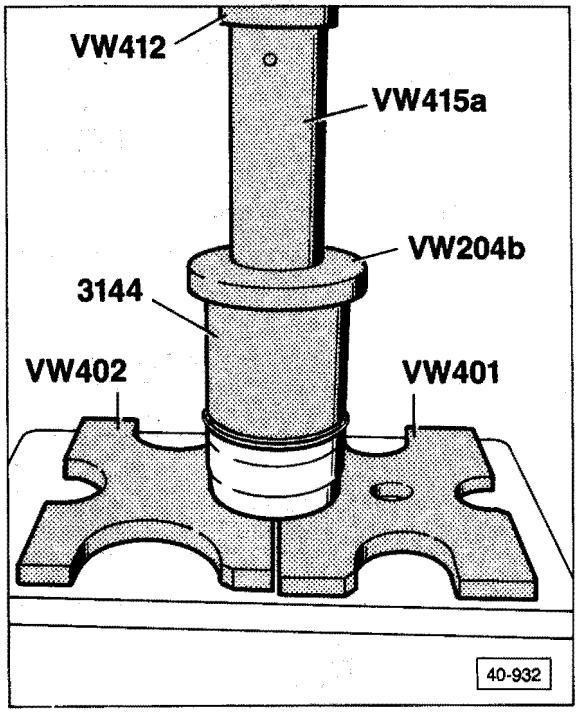

Fig. 3 Splash ring, pressing on

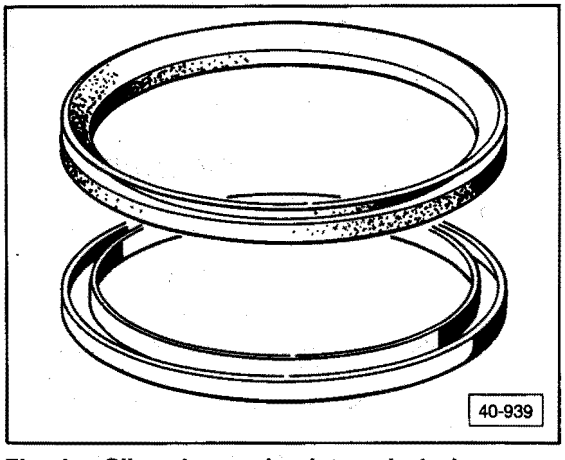

Fig. 4 Oil seal, pressing into splash ring

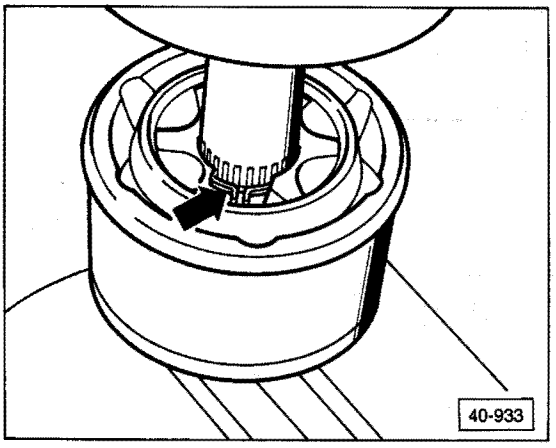

Fig. 5 Outer CV joint, removing

— expand circlip and remove joint from shaft

Note

If joint is seized on splines, drive it off shaft by tapping against hub with copper drift or mallet.

CAUTION

Don't jam hub on splines, or otherwise damage splines, during this procedure.

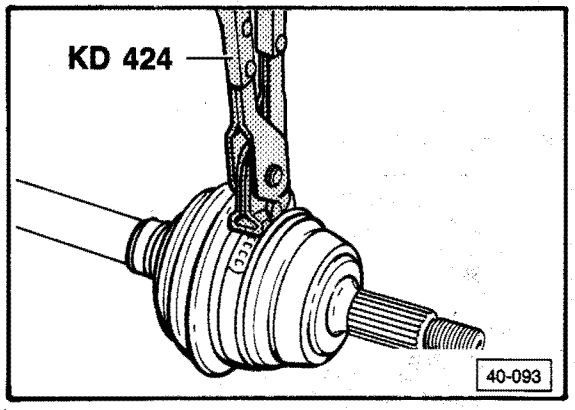

Fig. 6 Outer CV joint boot clamp, replacing

— a new clamp made of a stiffer transparent material is used in production beginning in February 1988
— the new clamp requires a force of 400 kg to tighten properly
— tool **KD 424** will apply the necessary force if squeezed very hard with both hands when compressing the clamp
— a gap in the compressed clamp of 1 to 2 mm is permissible after installation

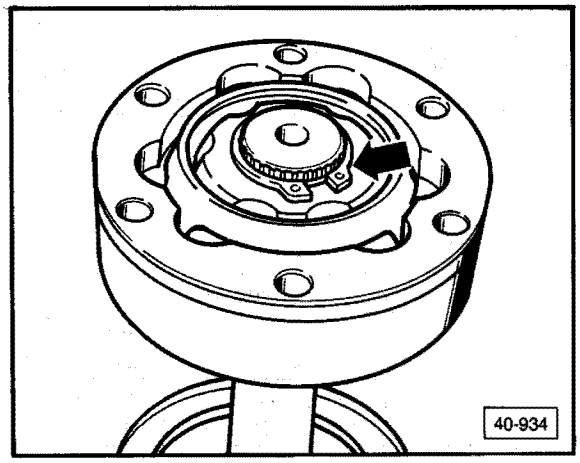

Fig. 7 Circlip, removing/installing

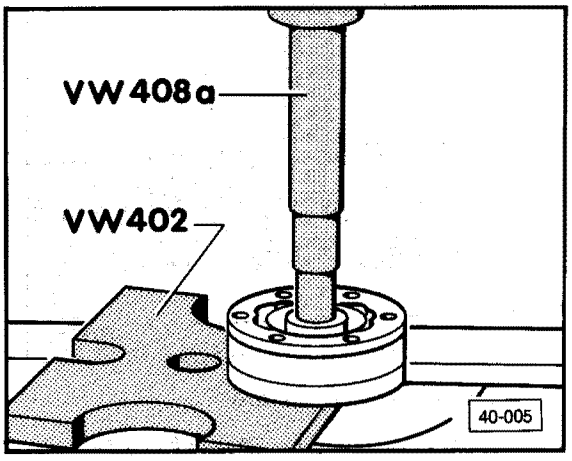

Fig. 8 Inner CV joint, pressing off

— support hub during procedure

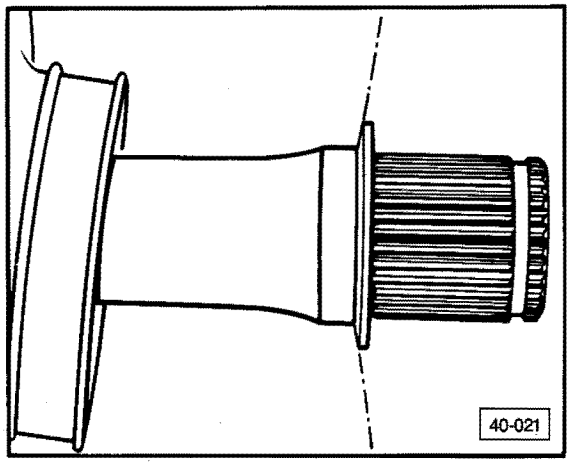

Fig. 9 Diaphragm spring, correct positioning

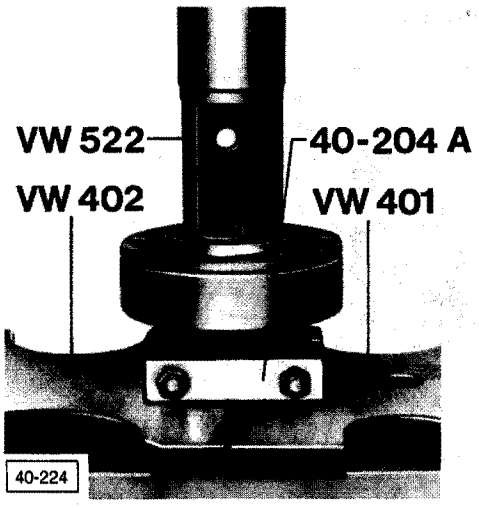

Fig. 10 Inner CV joint, pressing on

— press joint onto seat
— engage circlip into groove

CAUTION

Chamfer on inside diameter of ball hub (splines) must face contact shoulder on axle shaft.

Outer CV joint, disassembling/ assembling

Work sequence

Note

CV joint should be disassembled, and grease replaced, when joint is very dirty or when checking ball tracks for wear and damage.

Disassembling

— mark position of hub in relation to cage and housing

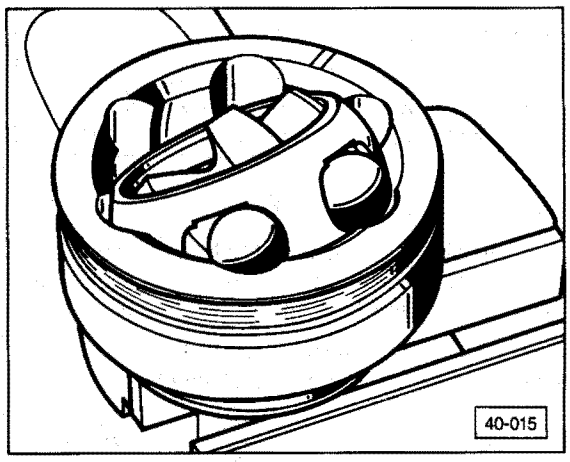

— swivel hub and cage
— remove balls one at a time

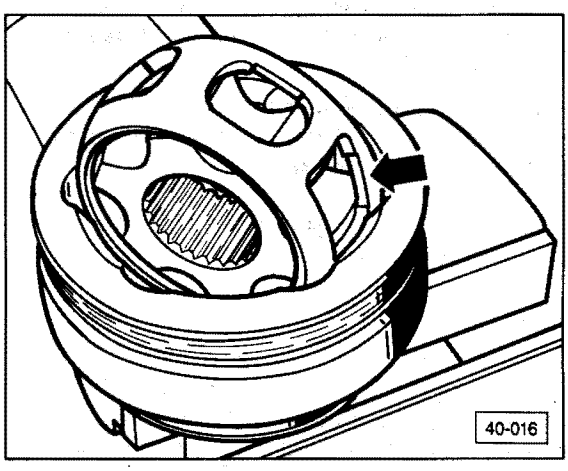

— turn two larger openings of cage (**arrow**) until level with joint edge, then remove cage with hub

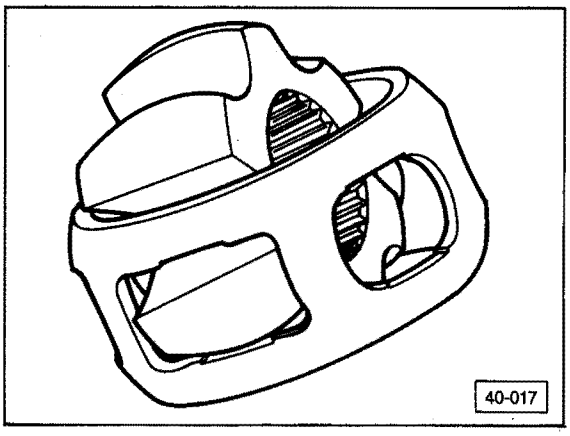

— swing hub until one segment can be pushed into larger rectangular opening of cage, then tilt hub out

CAUTION

Set of 6 balls in each joint belong to one tolerance group. Therefore, always replace hub, outer ring, ball cage and balls together.

Note

Check housing, hub, cage and balls for pitting. Excessive radial clearance in joint is noticeable when shifting gears. When this occurs, replace joint.

Do not replace joint because of polished appearance, or because ball track can be seen.

Assembling

— lube joint with 45 g (1.6 oz) G 6.3 grease (half of total amount)
— install cage with hub, into housing
- balls must be installed from opposite side
- marked position of hub, cage, and housing must match

— install new circlip in hub
— fill joint with remaining G 6.3 grease for a total amount of 90 g (3.2 oz)

Inner CV joint, disassembling/ assembling

Work sequence

Note

CV joint should be disassembled, and grease replaced, when joint is very dirty or when checking ball tracks for wear and damage.

Disassembling

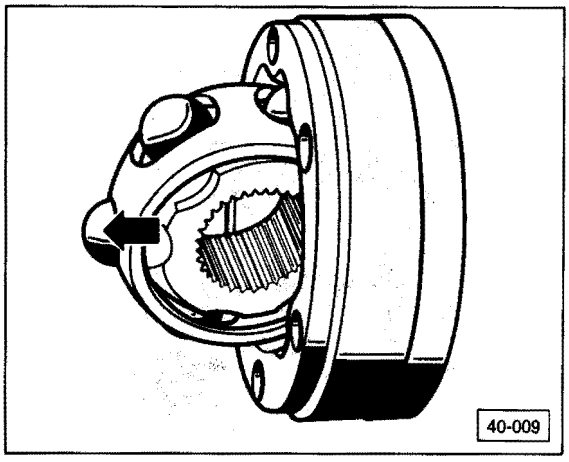

— pivot ball hub and cage out of outer ring and push outward (**arrow**)
— press balls out of cage

CAUTION

Ball hub and housing are paired. One hub, or one housing, must not be exchanged with another.

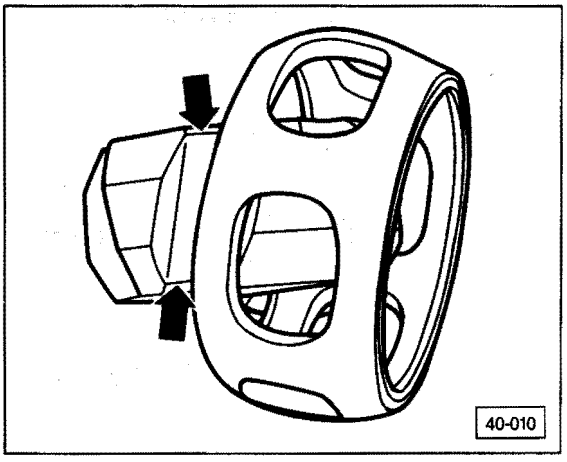

— align two grooves (**arrows**) and remove ball hub out of ball cage

Note

Check housing, hub, cage, and balls for pitting.

Assembling

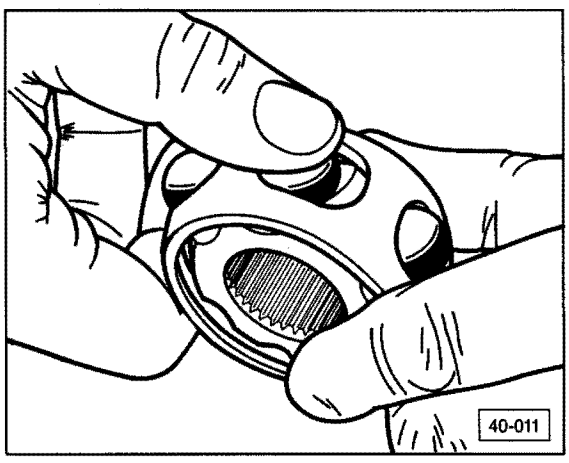

— insert ball hub along both grooves in ball cage
- installation position not important

— push balls into cage
— insert ball hub into proper outer ring
- chamfer on inside diameter of ball hub (splines) must point to contact shoulder on axle shaft and to large diameter of outer ring

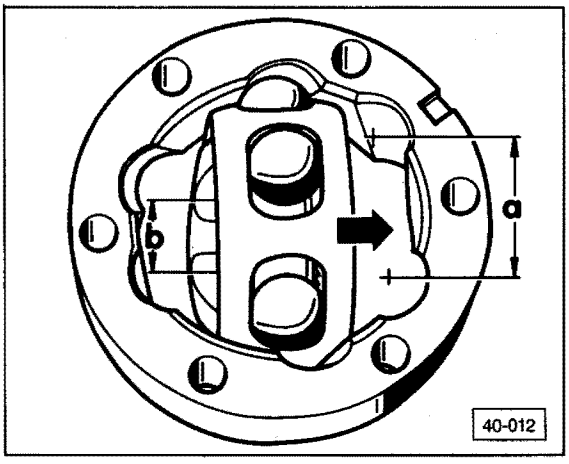

— insert hub with cage and balls into outer ring vertically
- wide ball groove in outer ring **a**, and a narrow groove in hub **b** are together on one side when hub is swung into outer ring

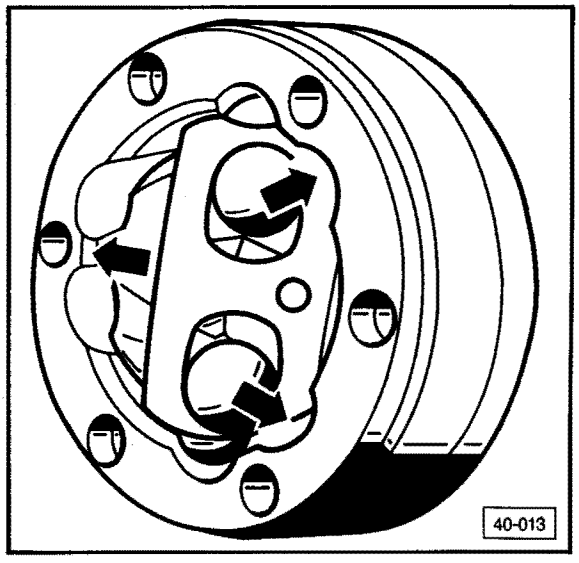

- when pivoting ball hub with cage and balls in outer ring, hub should be pivoted out of cage (**arrows**) until balls are spaced to fit groove

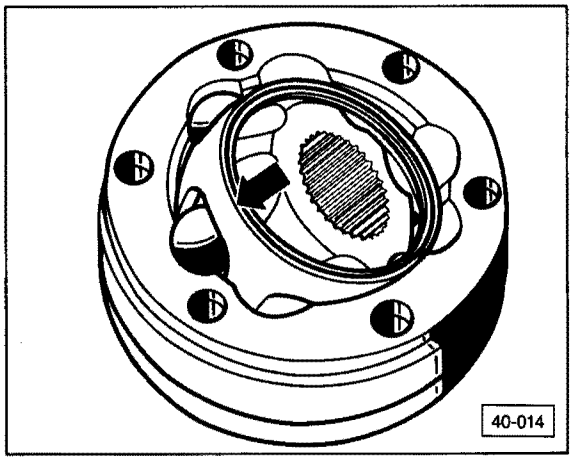

— press cage firmly (**arrow**) until hub swings fully into position
— fill each side of joint with 45 g (1.6 oz) of G 6.3 grease

Note

Joint is correctly assembled when ball hub can be moved in and out, by hand, over full range of axial motion.

Rear Wheel Suspension
Shafts & Axle

Index

— Axle shaft
assembly 42.4, 42.7
removing /installing 42.4
— Constant velocity joint
assembly 42.7
disassembling/assembling 42.8
removing/installing 42.8
— Rear axle
assembly 42.4
— Rear wheel suspension
assembly 42.2
— Shock absorber
bushing/sleeve 42.3
— Trailing arm
bushing 42.3
— Wheel bearings, inner/outer
grease seals 42.5
removing/installing 42.5
— Wheel studs
removing/installing 42.6

42 Rear Wheel Suspension, Shafts and Axle

Note

Replace self-locking nuts.

CAUTION

Do not attempt to straighten or weld wheel suspension parts.

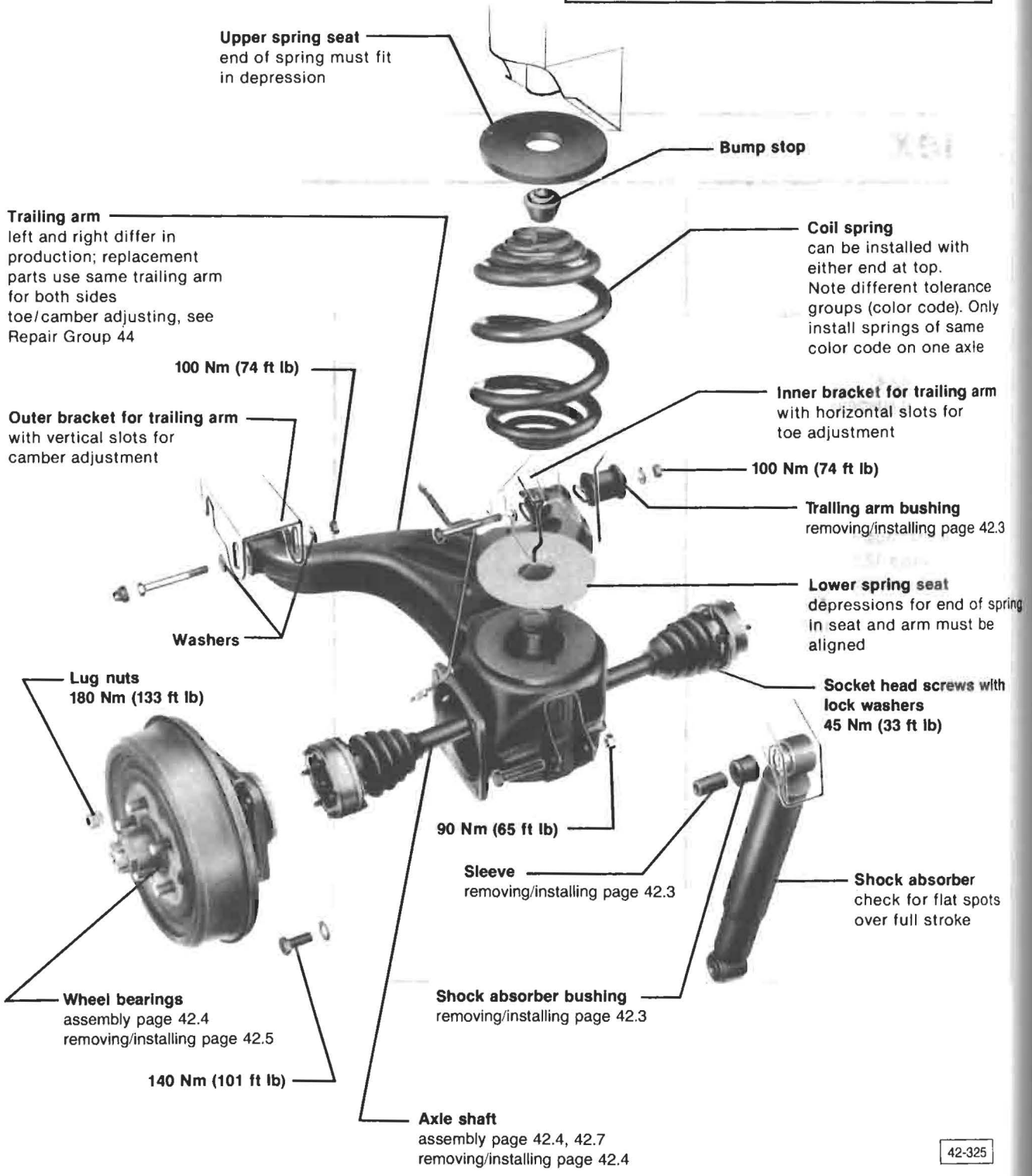

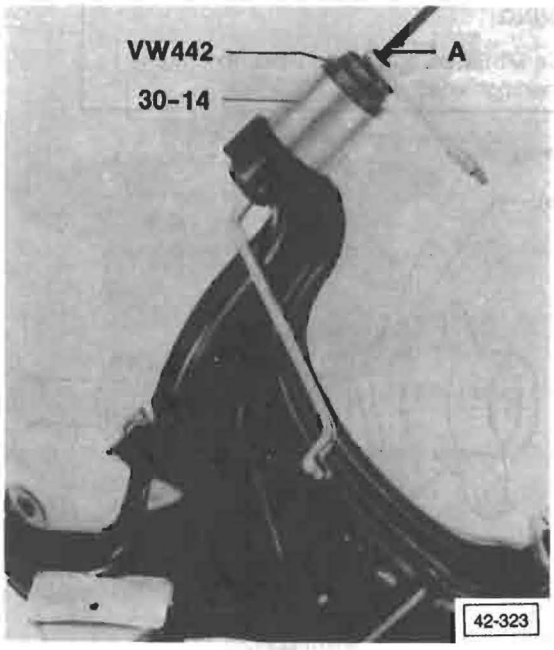

Fig. 1 Trailing arm bushing, removing

- **A** = threaded rod

— coat washer with oil and put between nut and tool
— pull bushing out of trailing arm

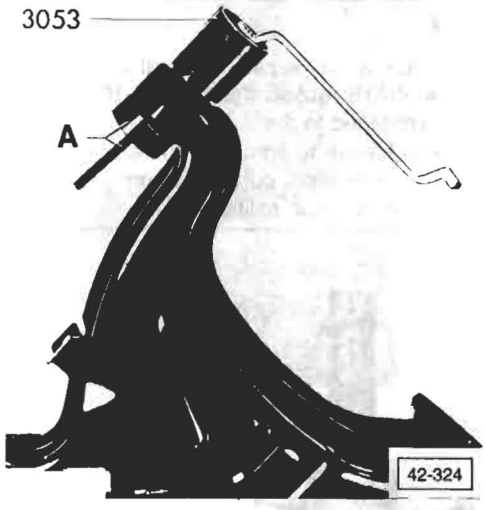

Fig. 2 Trailing arm bushing, installing

- **A** = thrust pad and threaded rod

— coat installation tool, bushing, and hole in trailing arm with soap solution
— pull bushing into trailing arm until sleeve contacts tool, then wait about 30 seconds before removing tool. Bushing will seat itself
— if necessary, press edge of bushing out

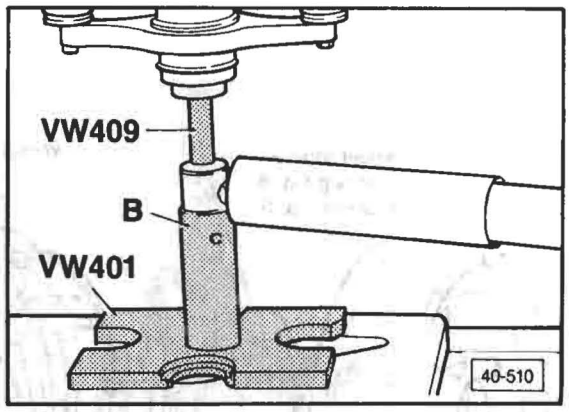

Fig. 3 Shock absorber bushing and sleeve, removing

- **B** = press tube

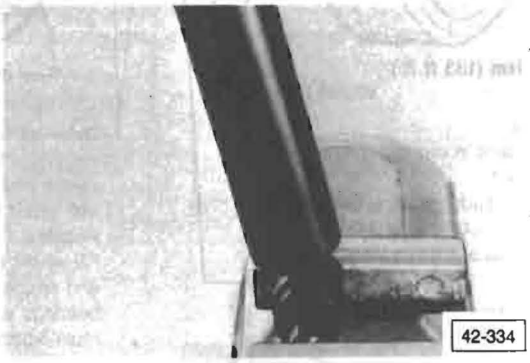

Fig. 4 Shock absorber bushing and sleeve, installing

— break sharp edge on one end of sleeve before installing
— coat parts with soap solution
— press sleeve half way into bushing with vise

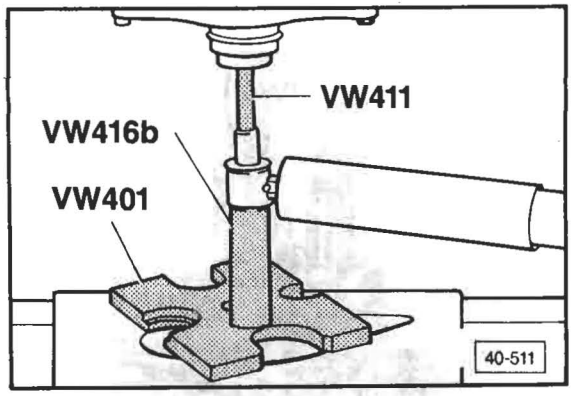

Fig. 5 Shock absorber bushing and sleeve, pressing

— press bushing and sleeve in fully

WARNING

Vehicle **MUST** be on ground when axle nut is loosened/tightened.

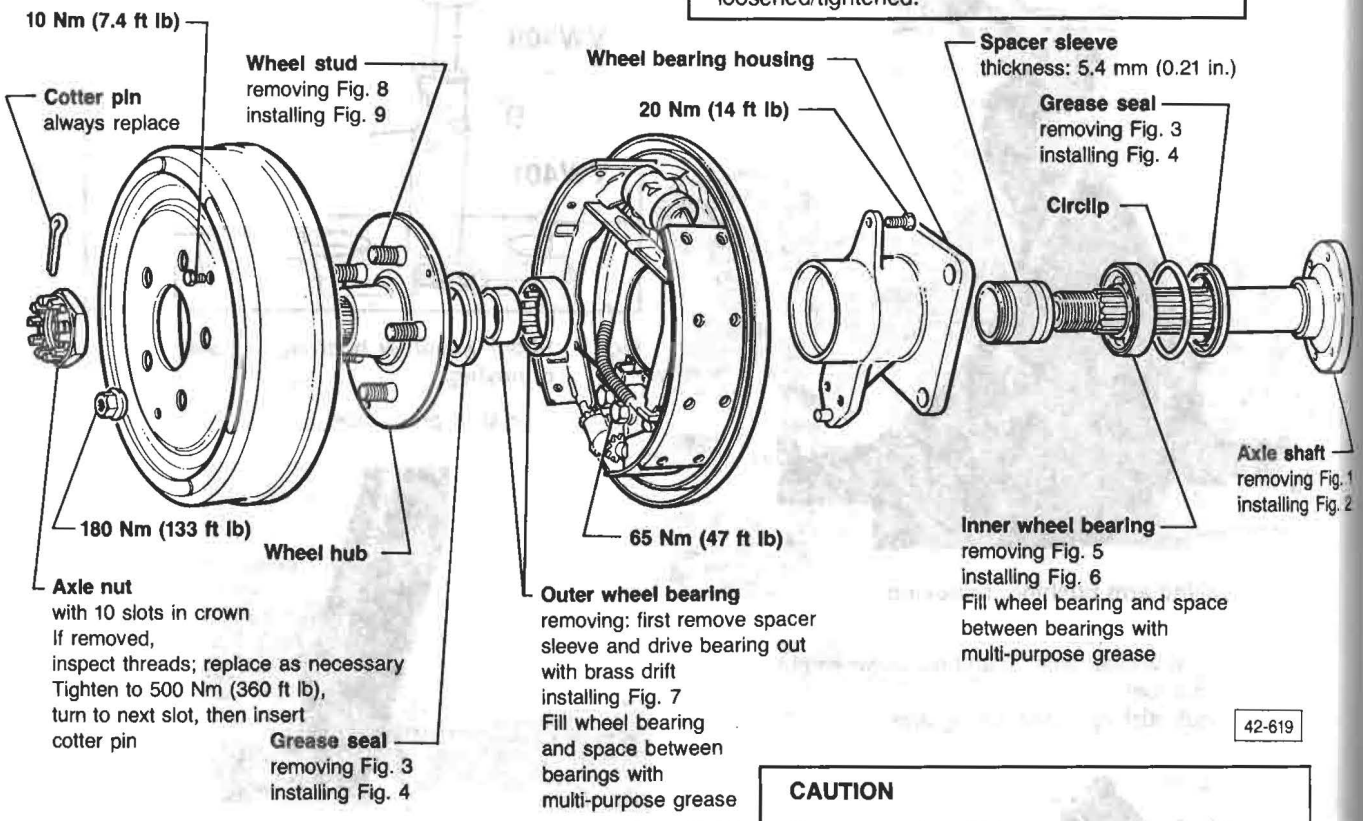

CAUTION

On any repairs which require removal of the axle nut, **ALWAYS** reassemble using a 10-slot crown nut tightened to the exact torque specification. Failure to tighten the axle nut to the correct specification, could result in damage to the hub/axle splines.

Note

During repairs on vehicles prior to **VIN 25ZBH119362**, install new sleeves and axle nuts and torque nuts to 500 Nm (360 ft lb)



Fig. 1 Axle shaft, removing

— press shaft out of wheel bearing housing

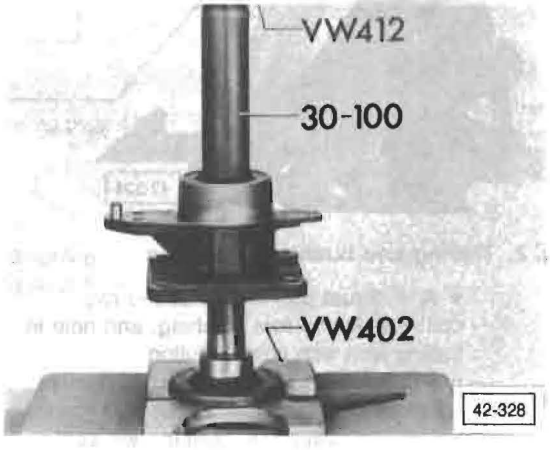

Fig. 2 Axle shaft, installing

— press shaft into wheel bearing housing

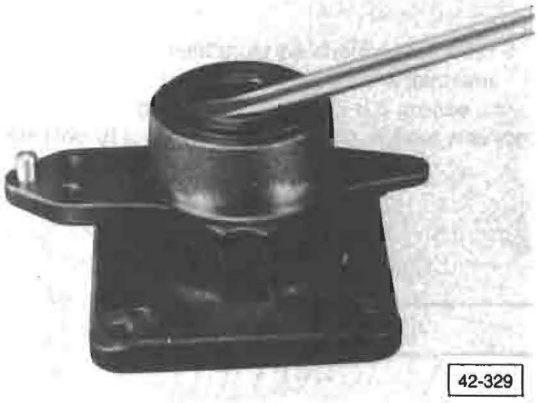

Fig. 3 Grease seals in wheel bearing housing, removing

— pry out with screwdriver



Fig. 4 Grease seals in wheel bearing housing, installing

— first install spacer sleeve and inner race of outer wheel bearing
— press in flush on wheel side and against circlip on flange side

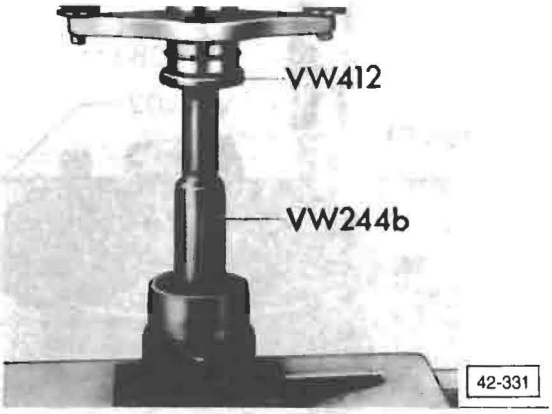

Fig. 5 Inner wheel bearing, removing

— remove inner race of outer wheel bearing and spacer sleeve
— drive outer wheel bearing out with brass drift
— press out inner wheel bearing

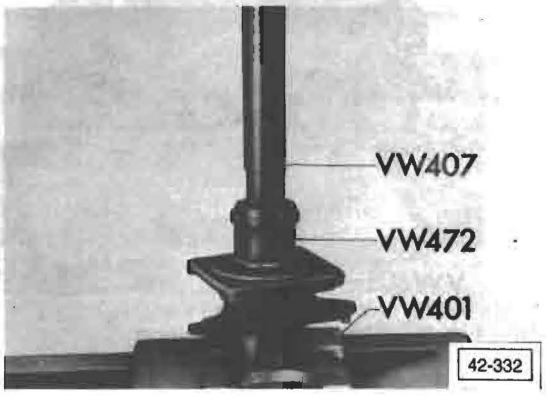

Fig. 6 Inner wheel bearing, installing

— grease bearing
— press bearing in until seated

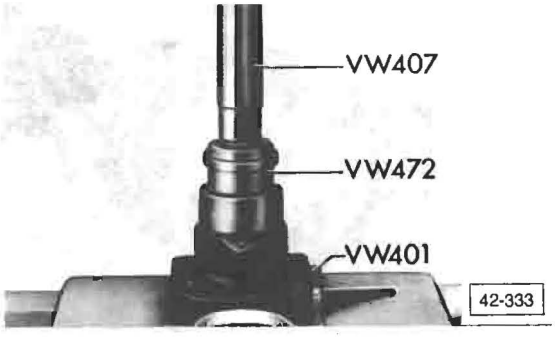

Fig. 7 Outer wheel bearing, installing

— grease bearing and fill space between inner and outer bearings with multi-purpose grease
— press bearing in until seated

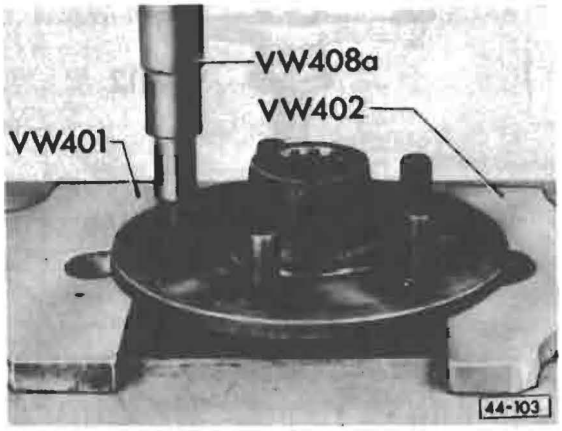

Fig. 8 Wheel studs, removing

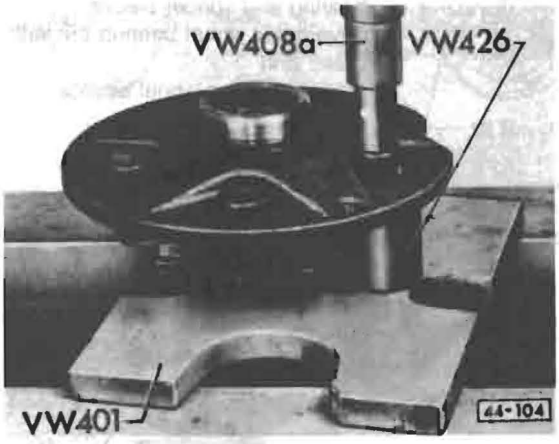

Fig. 9 Wheel studs, installing
— press in until seated

Note

Constant velocity joint must be checked for wear if boot is torn and dirt has entered joint. If joint was disassembled, pack 45 grams of G-6.3 grease into **each side** of joint when assembling. If boot was torn, apply grease as necessary.

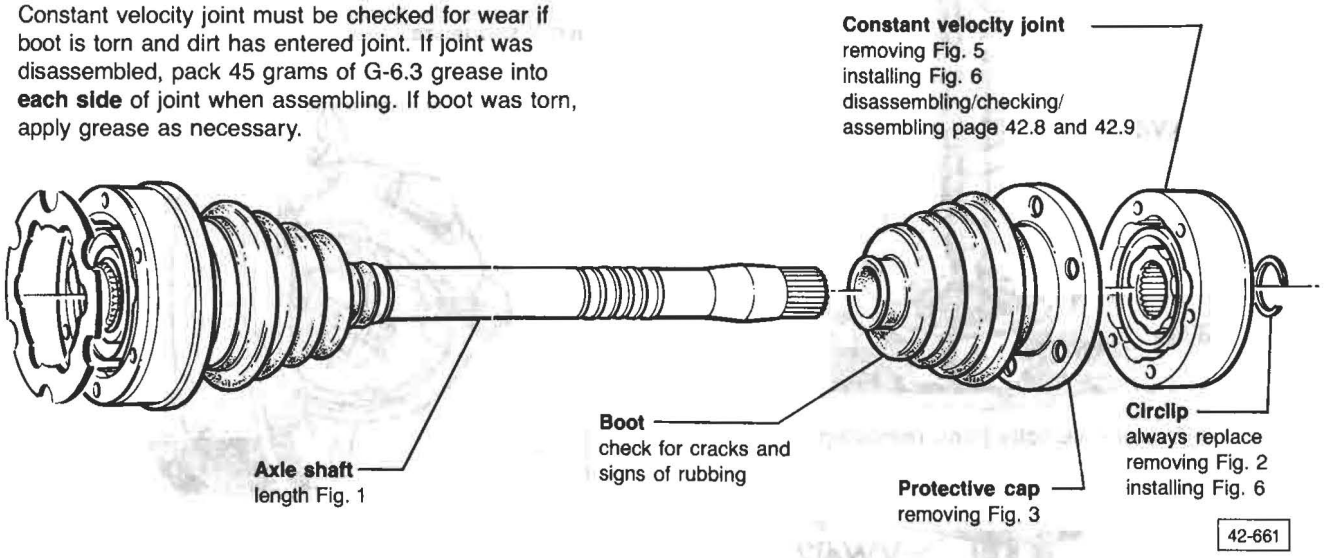

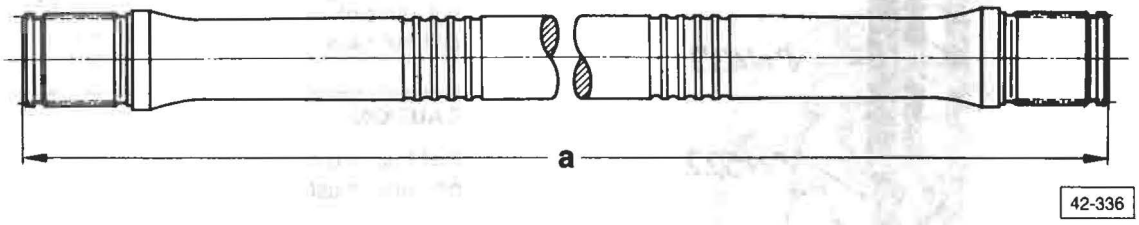

Fig. 1 Axle shaft, length

Transmission	Measurement a	
	right side	left side
manual	547.8 mm (21.567 in.)	547.8 mm (21.567 in.)
automatic	579.3 mm (22.807 in.)	531.0 mm (20.906 in.)

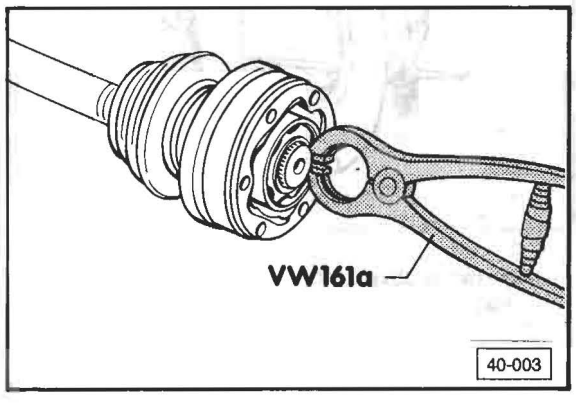

Fig. 2 Circlip, removing

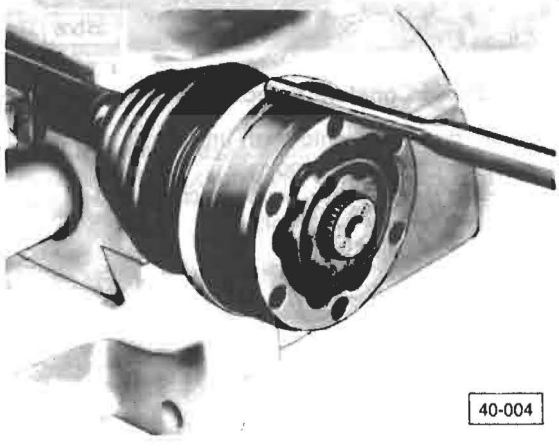

Fig. 3 Protective cap, removing

— drive off with drift

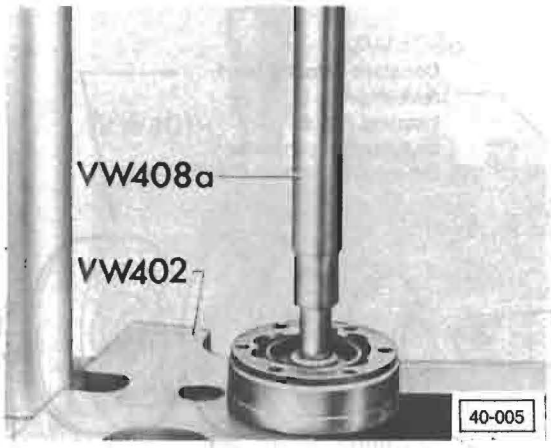

Fig. 5 Constant velocity joint, removing

— press out axle shaft

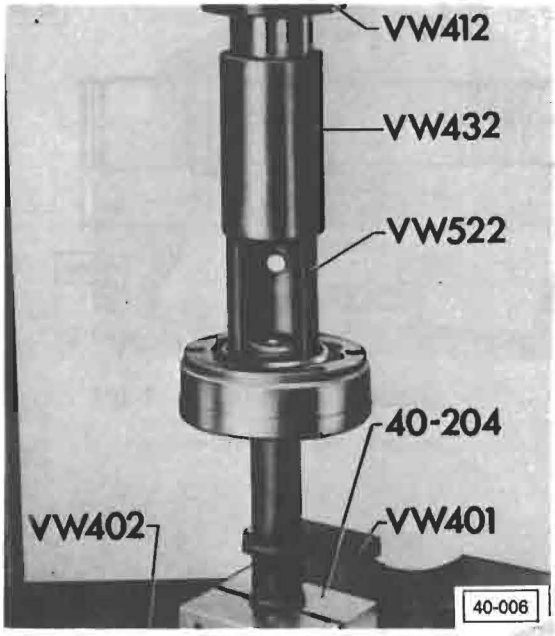

Fig. 6 Circlip/Constant velocity joint, installing

— press joint onto shaft until circlip can be pressed into groove
- if necessary, squeeze circlip into groove with pliers

Constant velocity joint, disassembling

Work sequence

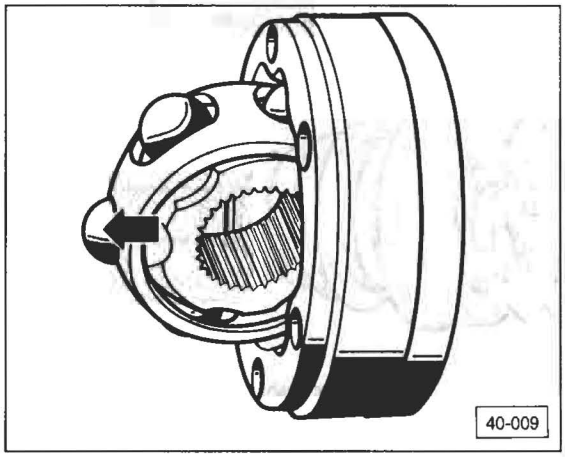

— pivot ball hub and cage out of outer ring and push out (**arrow**)
— pull out balls

CAUTION

Ball hub and outer ring are paired. One hub, or one ring, must not be exchanged with another. The 6 balls for each joint belong to one tolerance group, therefore always replace hub, outer ring, ball cage and balls together.

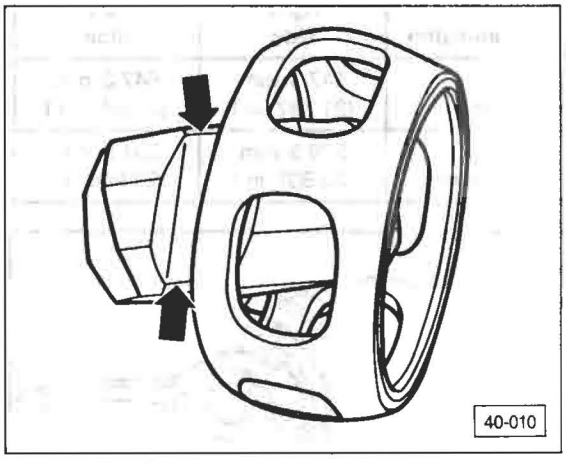

— align two grooves (**arrows**) and take ball hub out of ball cage

Note

Check housing, hub, cage, and balls for pitting.

Constant velocity joint, assembling

Work sequence

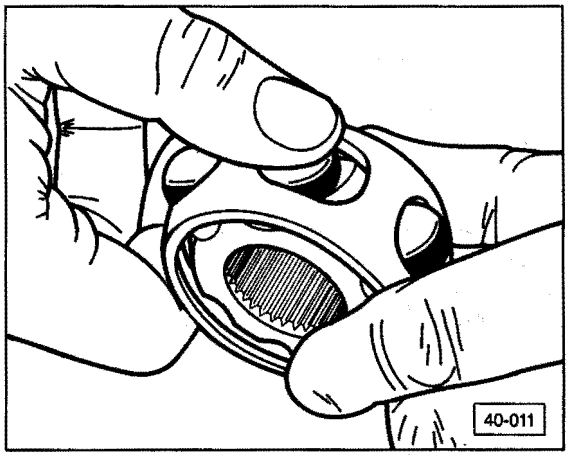

— insert ball hub along both grooves in ball cage
- installation position is not important

— push balls into cage
— insert ball hub into proper outer ring
- chamfer on inside diameter of ball hub (splines) must point to contact shoulder on axle shaft and to larger diameter of outer ring

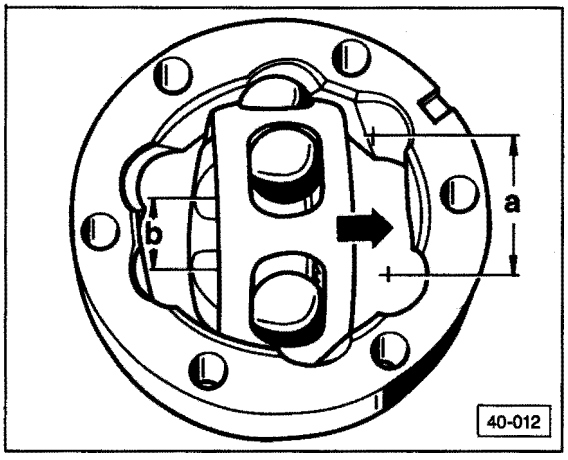

— insert hub with cage and balls into outer ring vertically
— be sure that in each case a wide ball groove in outer ring **a** and a narrow groove in hub **b** are together on one side when hub is swung into outer ring

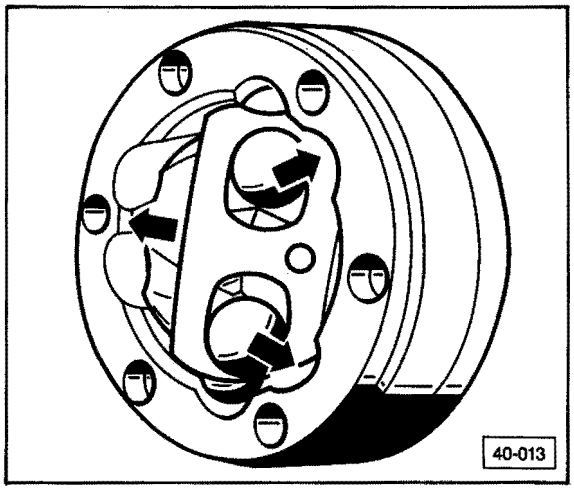

- when pivoting ball hub with cage and balls into outer ring, hub should be pivoted out of cage (**arrows**) until balls are spaced to fit grooves

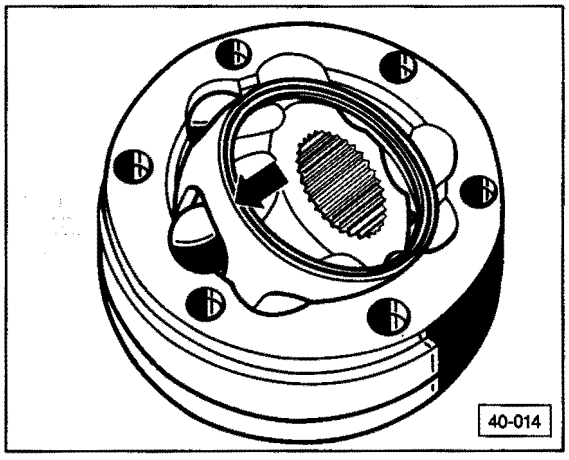

— press cage firmly (**arrow**) until hub swings fully into position
— fill **each side** of joint with 45 g (1.6 oz) of G-6.3 grease

Note

Joint is correctly assembled when ball hub can be moved in and out, by hand, over full range of axial motion.

Wheels—Tires, Wheel Alignment

Index

— Tires
rotating 44.1a
— Wheel alignment
front 44.3
rear 44.4
specifications 44.2

Syncro
— Wheel alignment
determining front toe 44.3a
specifications 44.5

Tires, rotating

Most tire manufacturers have changed their tire rotation policy on radial belted tires. Previously, radial belted tires were to be rotated only from front to rear and rear to front on the same side of the vehicle.

All radial belted tires approved for use on Volkswagen vehicles can be rotated diagonally if unusual wear, such as feather-edging, is observed.

Wheel alignment data for front and rear axles

When checking wheel alignment, the following conditions are important:

- except in emergency, alignment should not be checked until vehicle has run 625-1250 miles and coil springs have settled
- vehicle empty
- tire pressures correct
- testing surface level and horizontal
- vehicle bounced several times
- steering gear correctly adjusted
- steering linkage free of play

Front axle

	Empty 800 kg (1764 lbs.)	**Half load* 1000 kg (2204 lbs.)**	**Maximum load* 1100-1200 kg (2425-2646 lbs.)**
Toe per wheel (not pressed)	+10′ ± 15′	+10′ ± 15′	0° ± 15′
Total toe (wheels not pressed)	+20′ ± 30′ 2.0 ± 3.5 mm (0.08 ± 0.138 in.)	+20′ ± 30′ 2.0 ± 3.5 mm (0.08 ± 0.138 in.)	0° ± 30′ 0 ± 3.5 mm (0.08 ± 0.138 in.)
Camber (wheels in straight-ahead position)	0 ± 30′	15′ ± 30′	0 ± 30′
Total angle difference, at 20° lock to left and right (not adjustable)	1° 10′ ± 20′	1° 10′ ± 20′	1° 50′ ± 20′
Caster (vehicle on level)**	+7° 15′ ± 15′	6° 30′ ± 15′	6° ± 15′
corresponds to camber difference of wheel on lock from 20° left and right	4° 50′ ± 10′	4° 20′ ± 10′	4° ± 15′
maximum permissible difference between left and right	1°	1°	1°

Rear axle

	Empty 700 kg (1543 lbs.)	**Half load* 1050 kg (2314 lbs.)**	**Maximum load* 1300-1400 kg (2865-3086 lbs.)**
Toe per wheel Total toe (at specified camber)	0° ± 10′ 0° ± 20′	+10′ ± 10′ + 20′ ± 20′	+10′ ± 10′ +20′ ± 20′
Camber	−50′ ± 30′	−1° 30′ ± 30′	−2° 10′ ± 10′
maximum permissible difference between left and right	30′	30′	30′

*Measurements given for "half load" and "full load" apply for vehicles which cannot be measured unladen because of special equipment installed

Some models, from 1986 on, have a lower chassis height. For these vehicles use the "half-load" measurements as "empty" settings.

**If vehicle is inclined to front or rear, 10′ must be added or subtracted for each 15′ angle off level (measured in sliding door opening)

Example: Angle measured on stand :6° 40′
correction angle for vehicle angle (1° to front) : 40′
actual caster angle :7° 20′

Note

Angle of vehicle: to front — add correction figure
to rear — subtract correction figure

Front wheels, aligning

Work sequence

Note

Caster, camber and toe must **always** be adjusted in this sequence with vehicle on its wheels.

Caster, adjusting

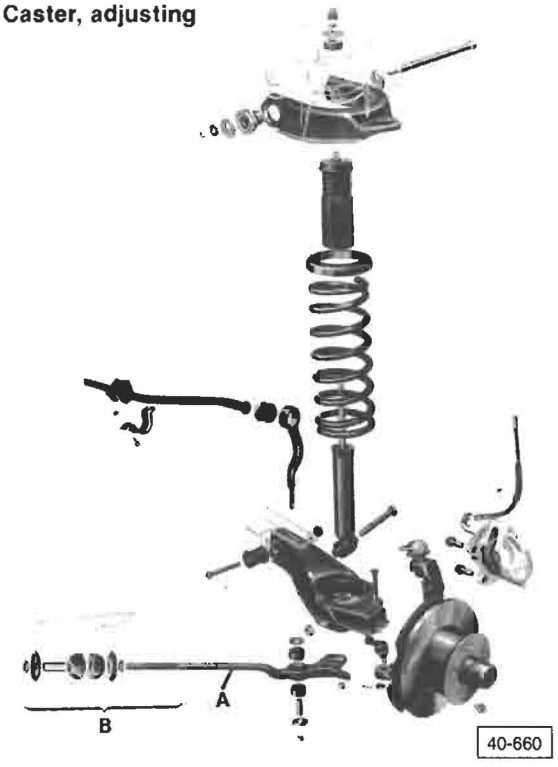

— set caster by adjusting length of radius bar **A** at location **B**

Camber, adjusting

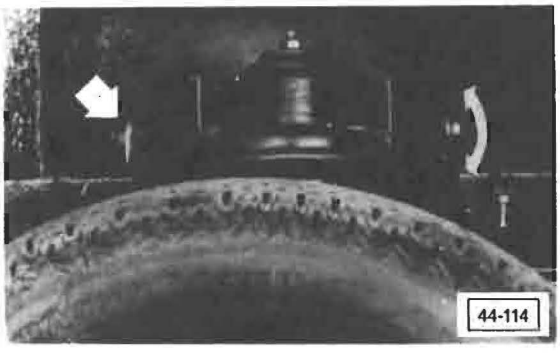

— loosen nut (**left arrow**) on upper control arm shaft
— set camber by turning upper control arm shaft (**right arrow**)
— tighten nut to **75 Nm (54 ft lb)**

Toe adjusting

— set steering gear to center position by turning steering wheel from lock to lock and counting number of turns

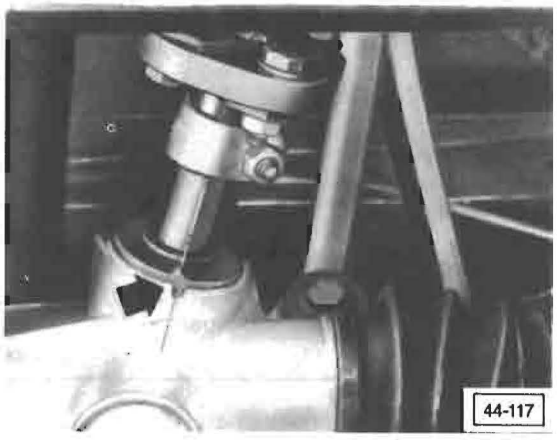

— turn wheel back, 1/2 the total number of turns, and align lug on rubber washer on pinion shaft with notch in steering housing (**arrow**)

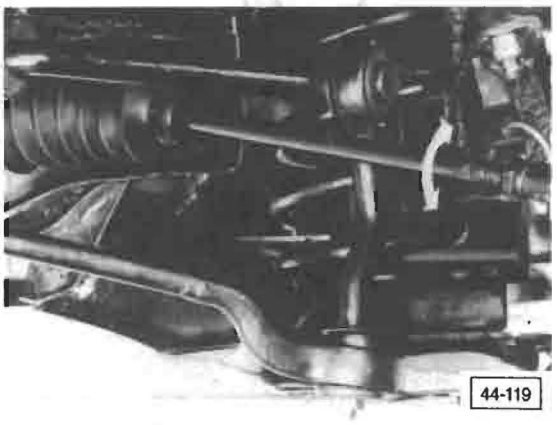

— loosen lock nuts and turn both tie rods until setting for toe is reached
— tighten lock nuts

Note

Steering must remain in center position.

— after turning tie rods, check that bellows are not twisted
— perform road test and check that steering wheel is in center position

Note

For non-Syncro vehicles only, if steering wheel cannot be centered by adjusting tie rods, remove steering wheel and center it on splines.

The specification for total toe at the front axle is determined by the jounce condition (ride height) of the vehicle.

Front toe specification, determining

— bounce front of vehicle several times to settle suspension

Note

The vehicle must be empty of cargo and occupants during measurement.

— remove one front wheel cover
— measure from center of bore in axle shaft to lower edge of wheel house (measurement **a**)

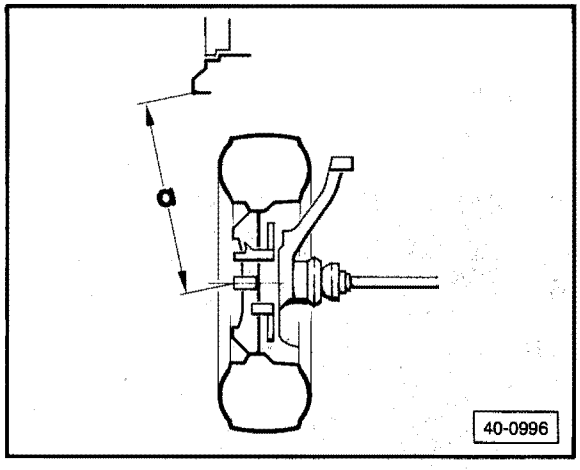

— use measurement **a** to find corresponding toe specification on the following graph:

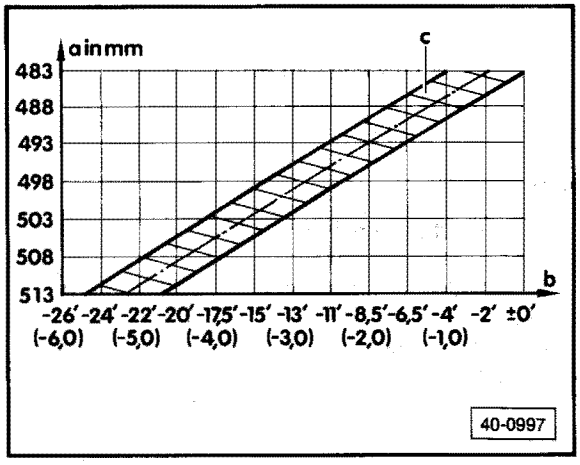

a — dimension (mm) between wheel center and lower edge of wheel house
b — toe per wheel
total toe = toe per wheel x 2
(values in parentheses = total toe in mm)
c — tolerance band for total toe

Note

If measured distance **a** falls outside the range on the graph, use the toe specification last shown at the appropriate end of the graph's vertical axis. Toe values must be adjusted as precisely as possible.

Rear wheels, aligning

Work sequence

Camber, adjusting

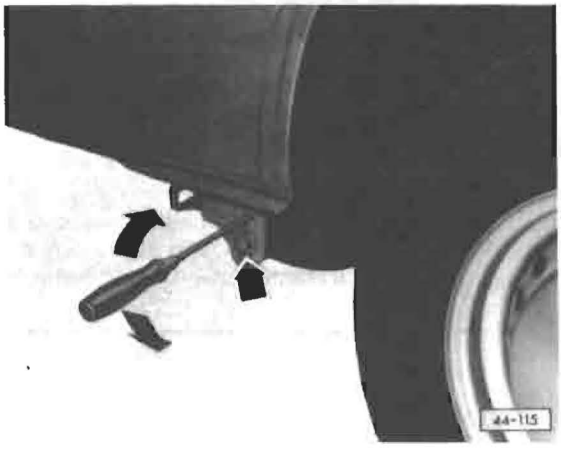

— loosen outer bolt (right arrow) on trailing arm
— adjust camber by moving trailing arm up or down with screwdriver
— tighten bolt to 105 Nm (76 ft lb)

Toe, adjusting

— loosen inner bolt on trailing arm

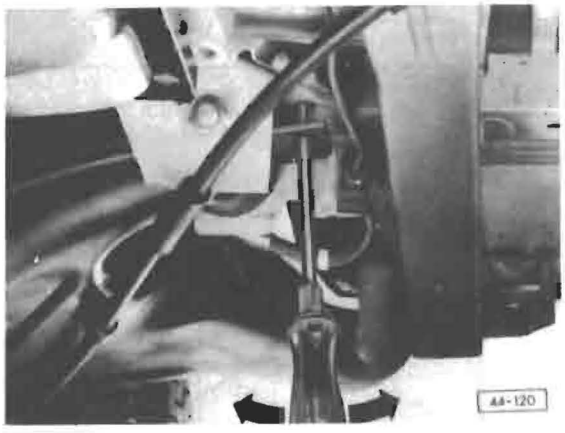

— adjust toe by moving trailing arm to front or rear with screwdriver
— tighten bolt to 105 Nm (76 ft lb)

Wheel alignment data for front and rear axles

When checking wheel alignment, the following conditions are important:

- alignment should not be checked until vehicle has run 625-1250 miles and coil springs have settled
- tire pressures correct
- test surface level and horizontal
- vehicle bounced properly
- steering gear correctly adjusted
- steering linkage free of play

Front axle	Empty	Full load
Toe per wheel (not pressed)	see page 44.3a	
Camber, wheels in straight ahead position Maximum permissible difference between sides	+20′ ± 20′ 20′	−30′ 20′
Caster, with zero vehicle tilt	+4° 40′ ± 15′	+3° 35′

Rear axle	Empty	Full load
Camber	−15′ + 30′ −10′	−1° 10′
Maximum permissible difference between left and right	20′	20′
Toe of each wheel (at specified camber)	+5′ ± 10′	+0° 5′

Brakes—
Mechanical Components

Index

WARNING

Friction materials such as brake and clutch linings or brake pads may contain asbestos fibers.

Do not create dust by grinding, sanding or by cleaning with compressed air.

Avoid breathing asbestos fibers and asbestos dust.

Breathing asbestos may result in serious diseases, such as asbestosis or cancer.

Breathing asbestos may cause severe injury and death.

— Brake pedal/linkage
assembly 46.10
— Front brake
assembly (1980-1985) 46.2
assembly (from 1986 m.y.) 46.5
pads (1980-1985)
removing/installing 46.3
pads (from 1986 m.y.)
removing installing 46.5a
— Parking brake
assembly 46.11
— Rear brake
assembly 46.6
shoes, adjusting 46.9
shoes, removing/installing 46.7

CAUTION

Always remove brake caliper before removing disc.
Never try to remove disc by using force. Force may cause caliper mounting frame to crack or break

Note

When removing caliper only, never disconnect brake hose, hang caliper on frame.
Disconnect brake hoses only when repairing brake calipers

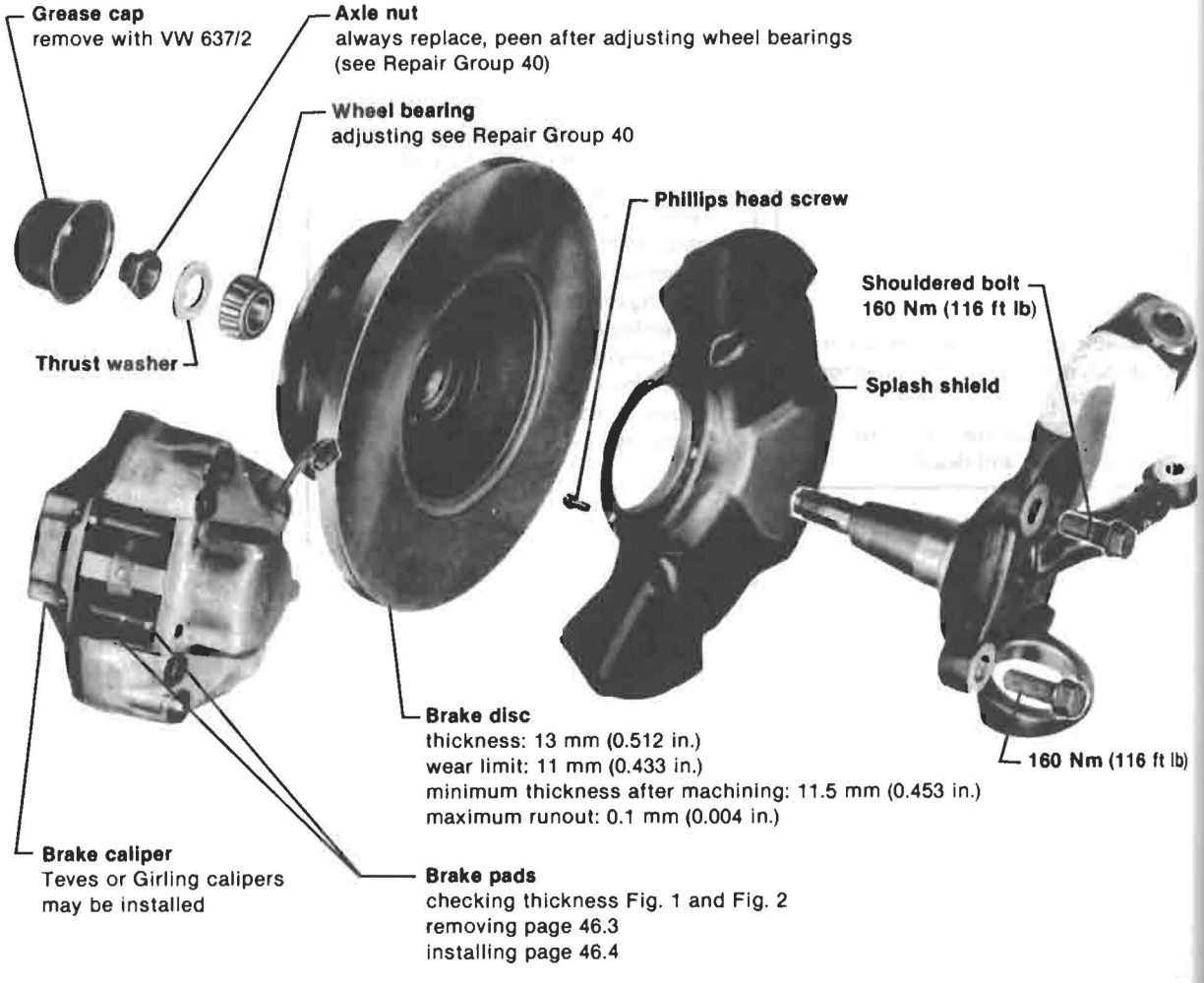

CAUTION

After installing new brake pads, depress brake pedal firmly several times before driving to permit piston and brake pads to adjust to brake disc

When machining brake discs, equal amounts must be taken off each side of disc.
Never machine one side only

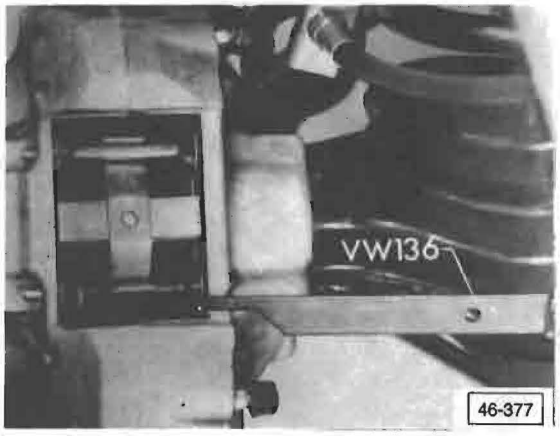

Fig. 1 Brake pad thickness, checking (Teves caliper)

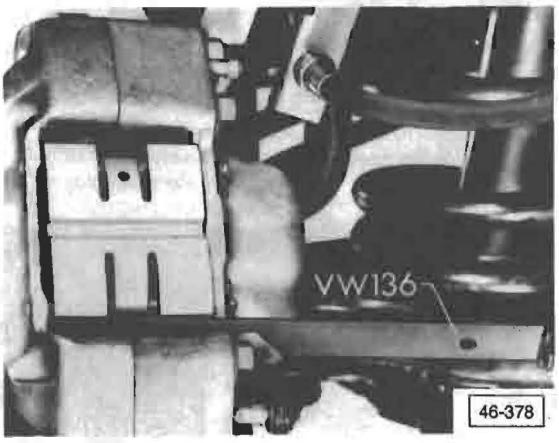

Fig. 2 Brake pad thickness, checking (Girling caliper)

— with wheel mounted, slide gauge from inside between rim and brake caliper
— try to insert gauge into gap at lower retaining pin, between spreader spring and brake pad backing plate
- if gauge cannot be inserted, brake pads are worn to wear limit of 2 mm (0.080 in.) and must be replaced

CAUTION

Always replace all pads on one axle and use same manufacturer of linings.

CAUTION

When re-using brake pads, mark pads to prevent changing inside to outside or from one caliper to another. Mixed pads can cause uneven braking.

Brake pads, removing

Work sequence

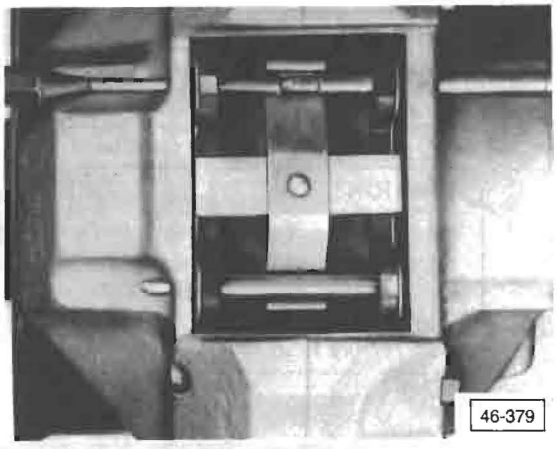

— drive out brake pad retaining pins

Note

On Girling calipers, remove circlips first.

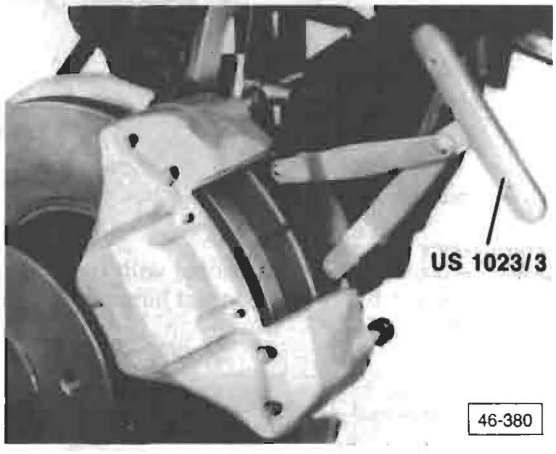

— pull out brake pads

WARNING

Friction materials such as brake and clutch linings or brake pads may contain asbestos fibers.

Do not create dust by grinding, sanding or by cleaning with compressed air.

Avoid breathing asbestos fibers and asbestos dust.

Breathing asbestos may result in serious diseases, such as asbestosis or cancer.

Breathing asbestos may cause severe injury and death.

Brake pads, installing

Work sequence

WARNING

Brake fluid is poisonous.
Do not siphon by mouth

CAUTION

When piston is pushed into caliper, brake fluid is pushed into reservoir. To prevent overflowing, siphon some fluid out with an appliance which is used for this purpose only. Brake fluid will damage paint

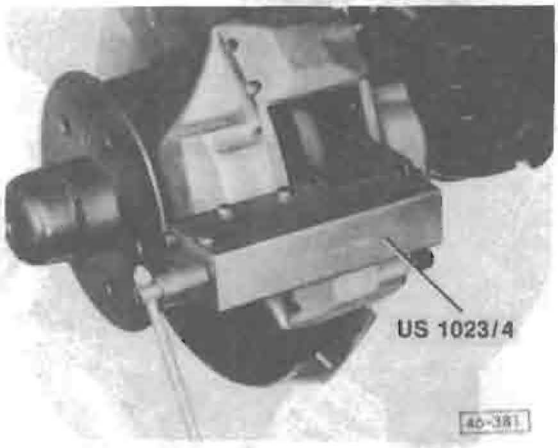

— press piston into caliper with tool
— clean brake pad contact surfaces in caliper

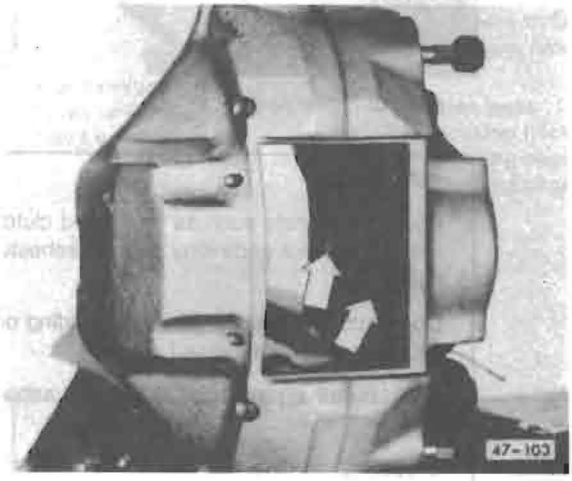

— check position of piston (Teves caliper only)
• recess in piston (arrows) must face bottom. Lugs on noise damping plate engage in recess

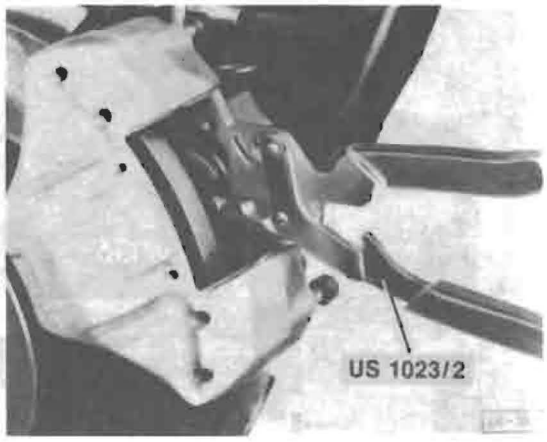

— if necessary, correct position of piston using pliers US 1023/2

Note

Girling calipers have arrows on noise damping plates. Arrows must point up

— install noise damping plates, brake pads and spreader springs

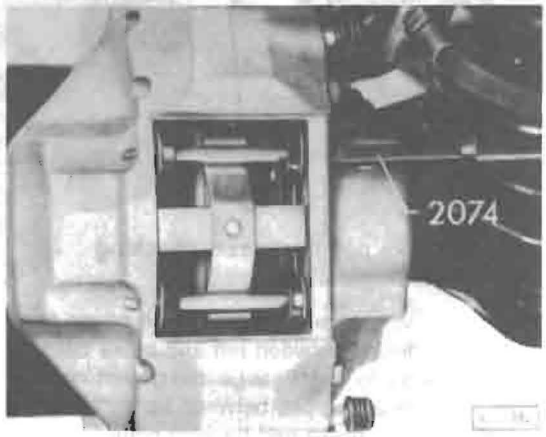

— install retaining pins (on Girling calipers
— install new circlips on retaining pins)

CAUTION

After installing brake pads, depress brake pedal firmly several times before driving to permit pistons and brake pads to adjust to brake disc

Note

If brake hose brackets were removed, reinstall with clearance of 25 mm (1 in.) between hose and tire.
Check clearance by turning wheel from left to right.
Correct clearance by bending bracket

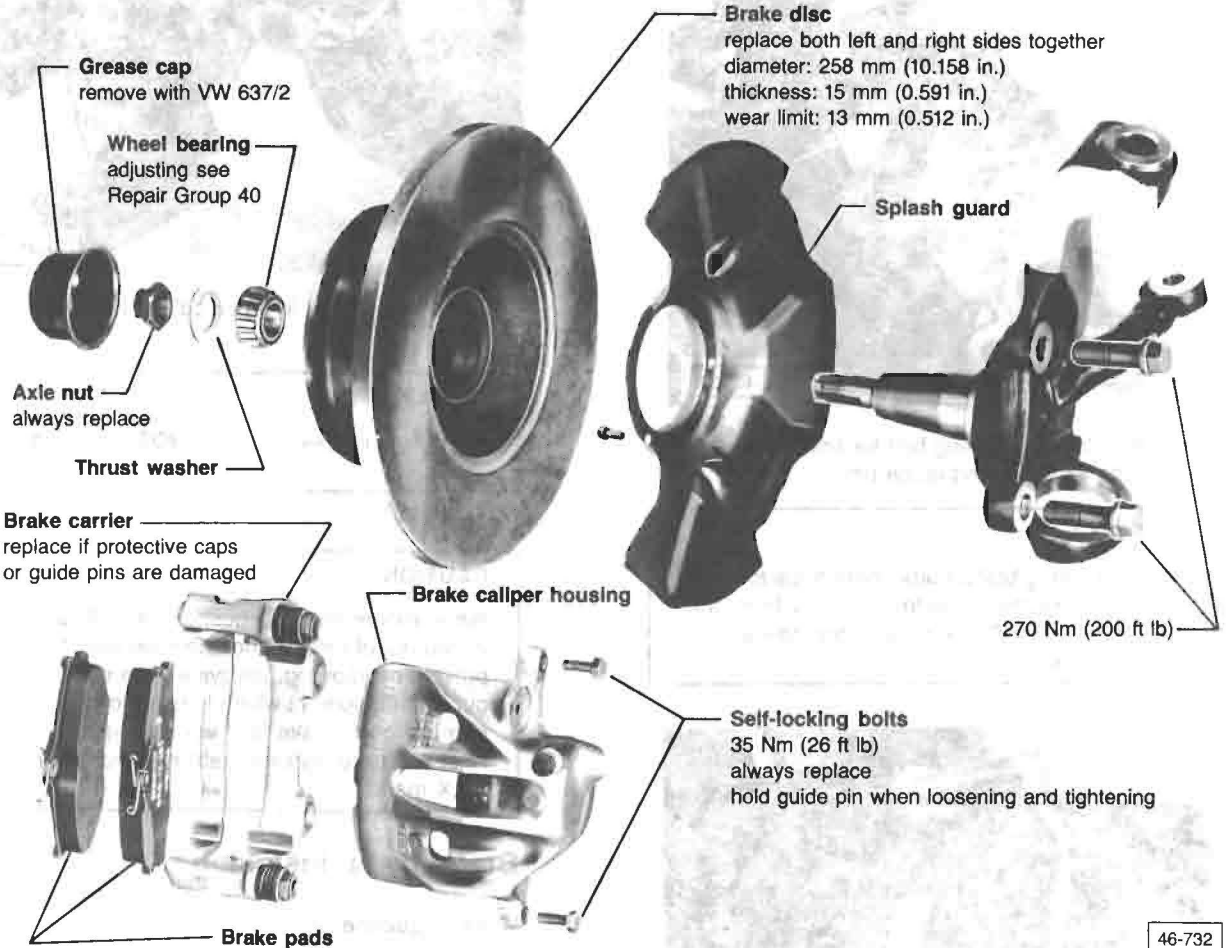

CAUTION

After installing new brake pads, depress brake pedal firmly several times before driving to permit piston and brake pads to adjust to brake disc.

When machining brake discs, equal amounts must be taken off each side of disc.

Never machine one side only.

Always remove brake caliper before removing disc.

When removing caliper only, never disconnect brake hose, hang caliper on frame.

Disconnect brake hoses only when repairing brake calipers.

Brake pads, removing

Work sequence



— remove lower fastening bolt for brake caliper housing while holding guide pin

CAUTION

When re-using brake pads, mark pads to prevent changing inside to outside or from one caliper to another. Mixed pads can cause uneven braking.

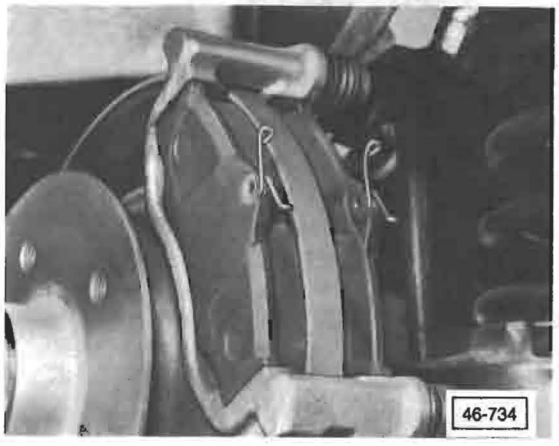

— swing brake caliper housing upward and remove brake pads

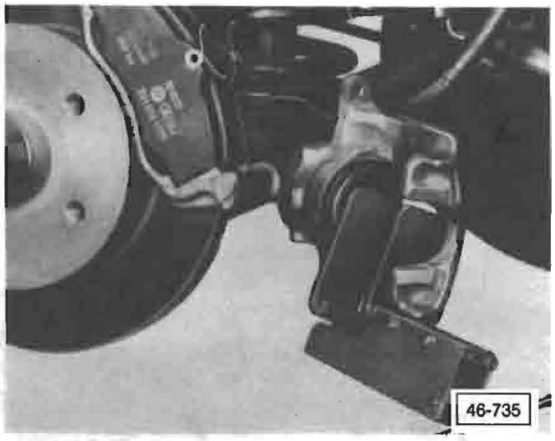

— press piston back in brake caliper housing

WARNING

Brake fluid is poisonous. Do **NOT** siphon by mouth.

CAUTION

When caliper piston is pushed back, fluid is forced out of caliper and into reservoir. To prevent overflowing, always siphon some fluid out with equipment which is used for this purpose only. Brake fluid will damage paint. After pads are installed, refill reservoir only to MAX mark.

Brake pads, installing

Work sequence

— insert brake pads into carrier
— swing caliper housing down and tighten bolts to 35 Nm (26 ft lb)

Note

New self-locking bolts **MUST** be used when refastening brake caliper housing.

— depress brake pedal firmly several times before driving

WARNING

Friction materials such as brake and clutch linings or brake pads may contain asbestos fibers.

Do not create dust by grinding, sanding or by cleaning with compressed air.

Avoid breathing asbestos fibers and asbestos dust.

Breathing asbestos may result in serious diseases, such as asbestosis or cancer.

Breathing asbestos may cause severe injury and death.

Note

Lightly lubricate all moving parts and contact surfaces with MoS_2.

CAUTION

Always reline or replace all shoes on one axle and use same manufacturer of linings.

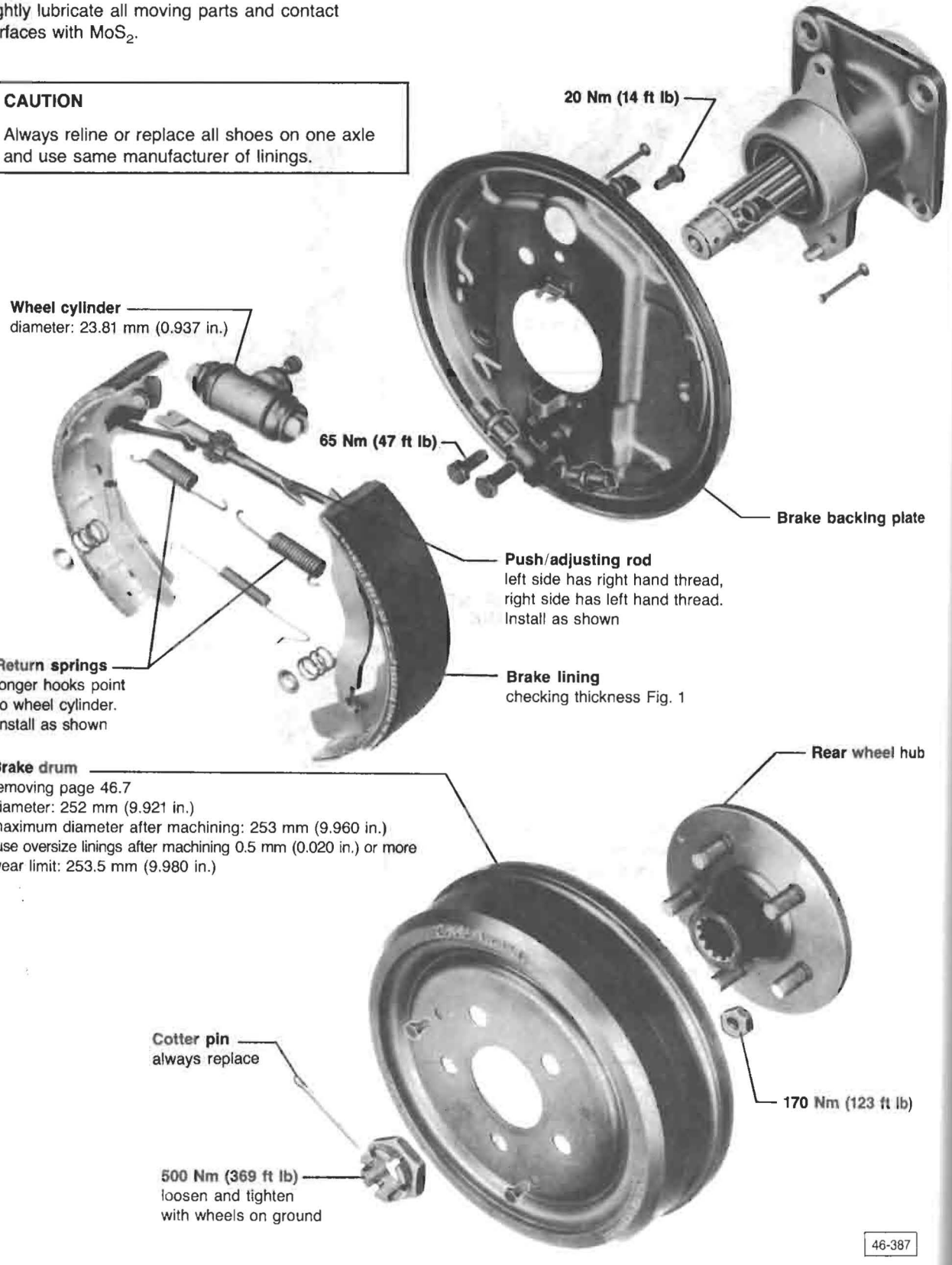

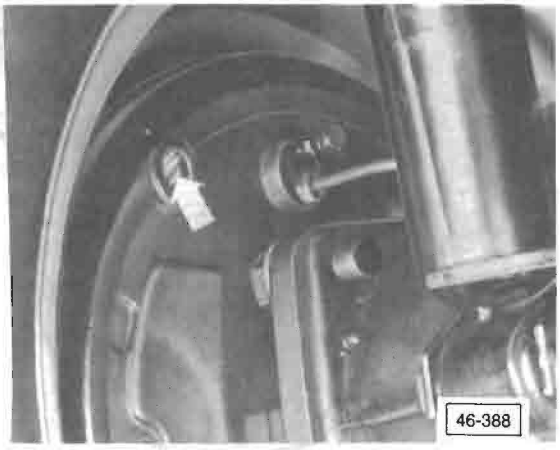

Fig. 1 Brake linings, checking (arrow)

- standard lining thickness: 6.0 mm (0.236 in.)
- oversize lining thickness: 6.5 mm (0.256 in.)
- wear limit: 2.5 mm (0.098 in.)

Brake drum, removing

Work sequence

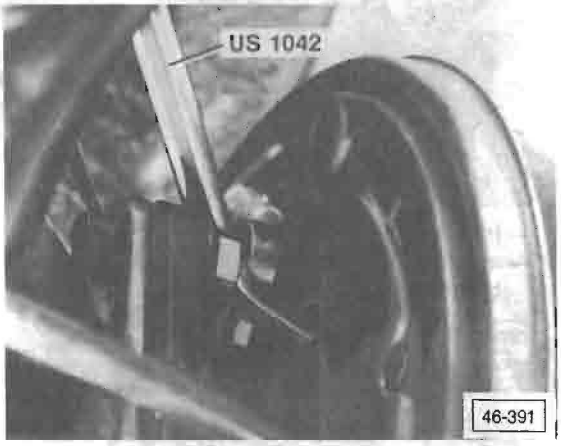

— release parking brake cables by loosening nuts at parking brake equalizer
— back off adjuster through hole in backing plate

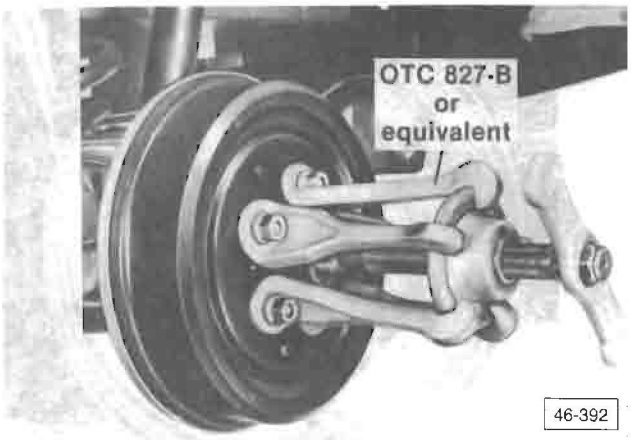

— pull off drum and hub

Note

Drum must rotate freely when being pulled off.

Brake shoes, removing

Work sequence

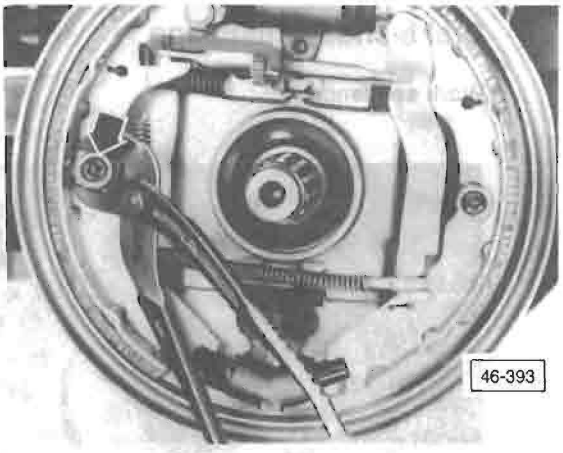

— remove spring retainers and hold down springs (arrow)
— unhook parking brake cable at lever on brake shoe
— remove lower return spring
— remove adjuster spring
— go to next page

Warning

Friction materials such as brake and clutch linings or brake pads may contain asbestos fibers.

Do not create dust by grinding, sanding or by cleaning with compressed air.

Avoid breathing asbestos fibers and asbestos dust.

Breathing asbestos may result in serious diseases, such as asbestosis or cancer.

Breathing asbestos may cause severe injury and death.

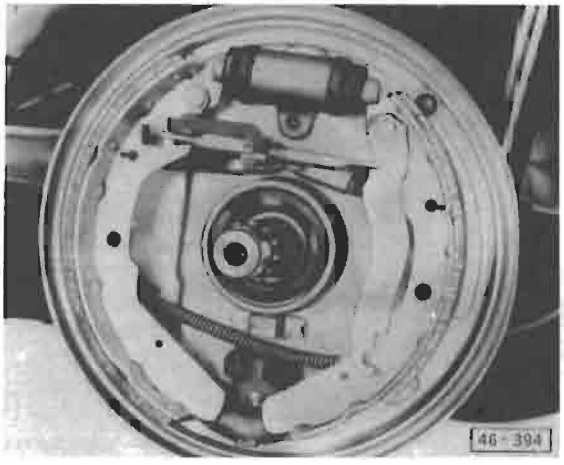

— move brake shoes out of lower support
— unhook return springs
— remove brake shoes together with push/adjusting rod

CAUTION

Do not press pistons out of wheel cylinder

Brake shoes, installing

Work sequence

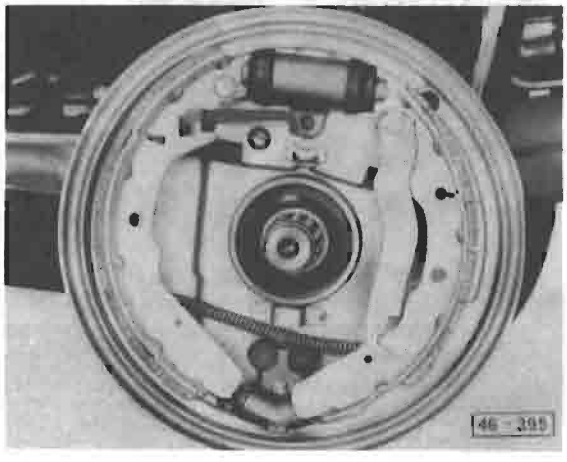

— lubricate thread of push/adjusting rod and check that adjuster moves freely
— install brake shoes together with return springs
— insert brake shoes into lower supports

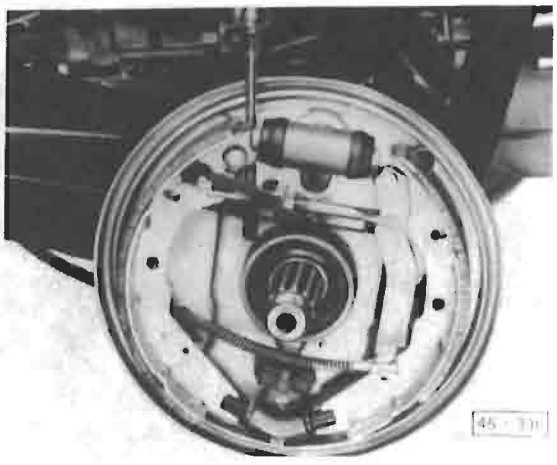

— pry brake shoe away from wheel cylinder with screwdriver and install push/adjusting rod
— install hold down springs and retainers

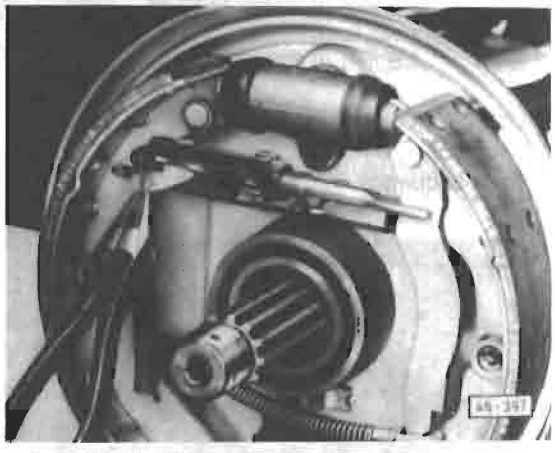

— install adjuster spring
— attach parking brake cable to lever on brake shoe

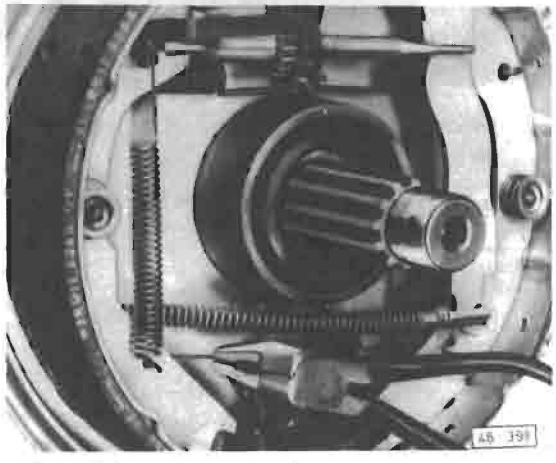

— install lower return spring

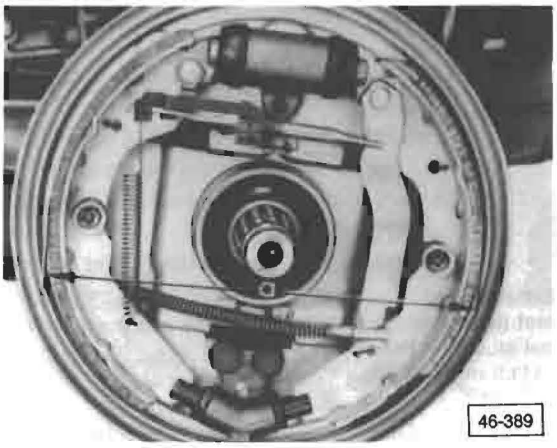

— make basic adjustment of brake shoes by turning adjuster until measurement **a** is obtained

Example

brake drum inner diameter:	252.2 mm (9.929 in.)
minus clearance:	1.5 mm (0.059 in.)
measurement **a** =	250.7 mm (9.870 in.)

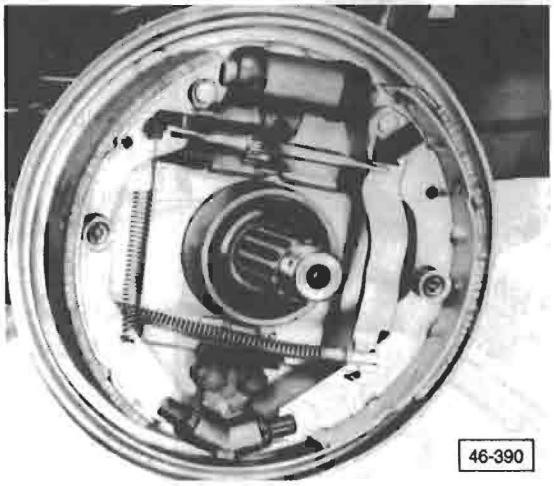

— adjust parking brake cables at parking brake equalizer (see page 46.11)
  - there must be no play between lever on brake shoe and push/adjusting rod

— install brake drum
— tighten slotted nut to 500 Nm (369 ft lb) and turn further until new cotter pin fits into hole in axle shaft

CAUTION

Depress brake pedal several times before driving so that rear brakes self adjust.

Note

Instrument panel must be removed before booster and bracket with pedal connected, can be taken out

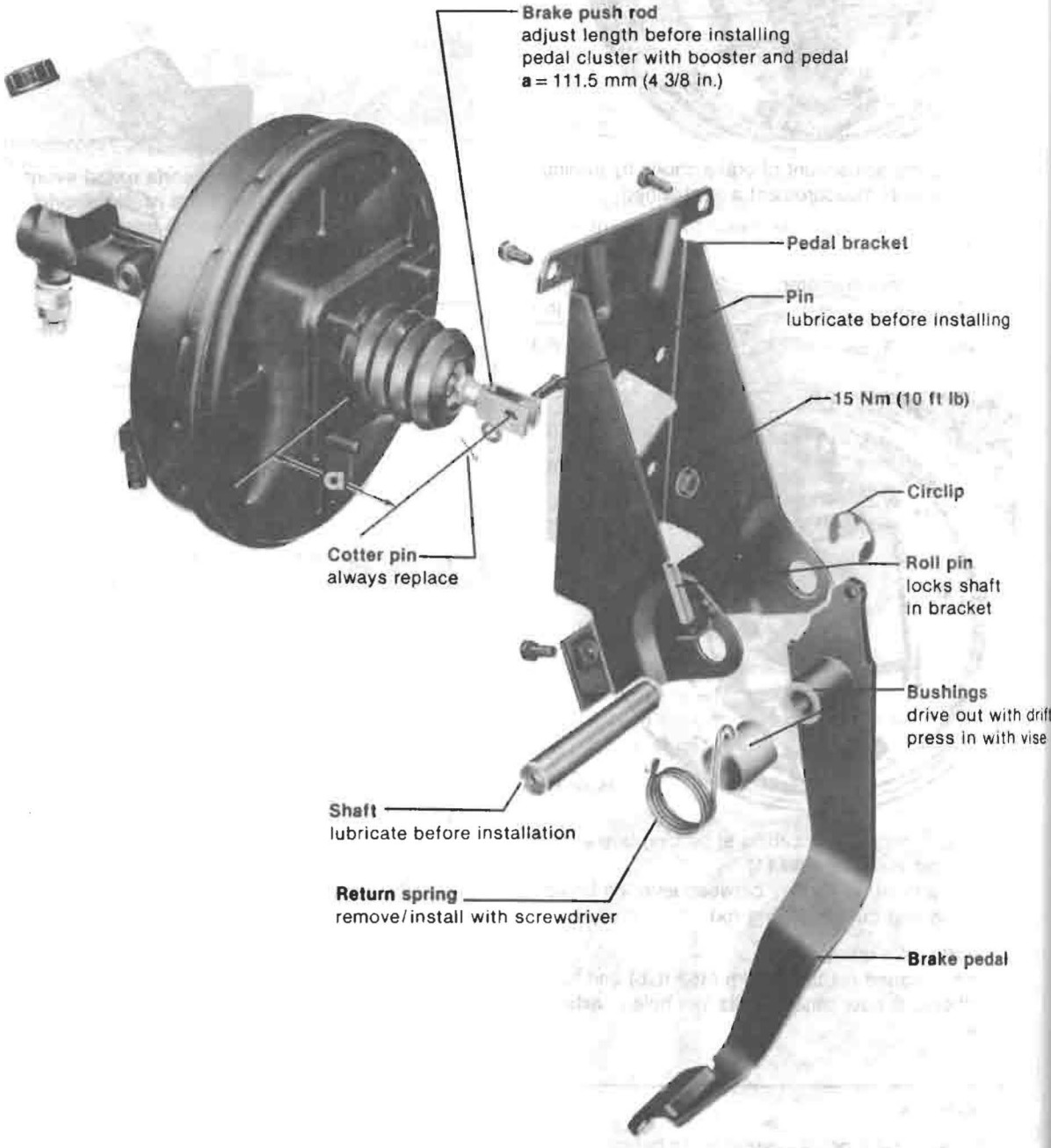

Note

Lubricate all joints and moving parts lightly before installing.
As of Chassis No. 25 CH 028 686, following new type parts are installed:

- Left and right parking brake cables (now plastic coated)
- Parking brake actuator rod (was cable)
- Equalizer

New type parts **can be** installed into earlier vehicles

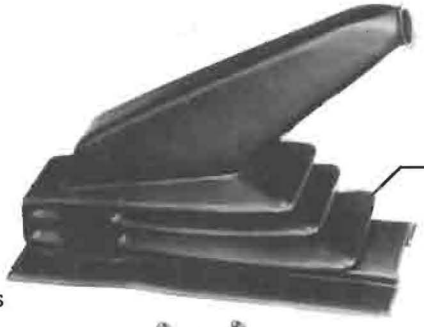

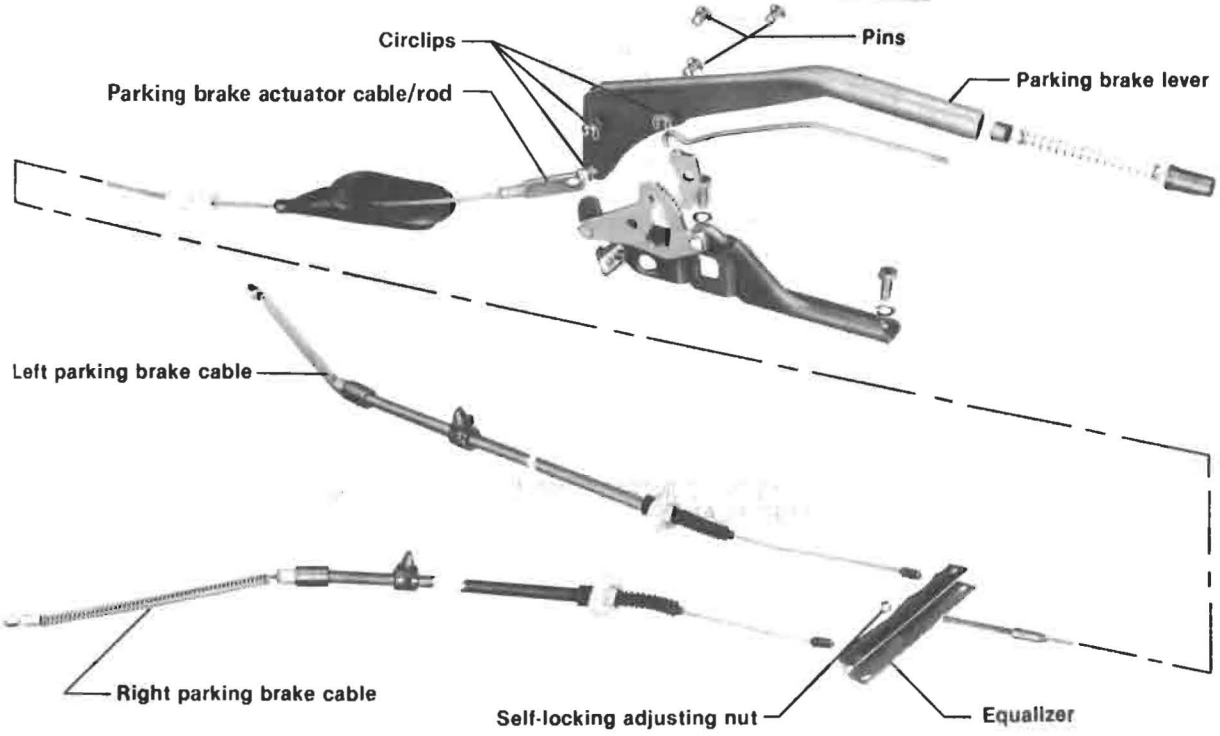

Parking brake, adjusting

Work sequence

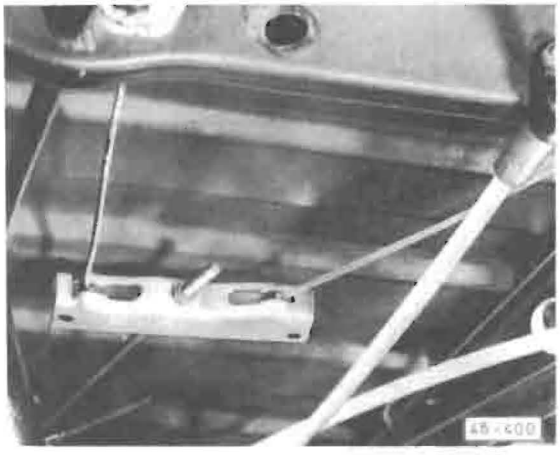

CAUTION
Rear brakes must be properly adjusted before adjusting parking brake

— release parking brake
— tighten adjusting nut (self locking) until there is no noticeable play at brake components
  • check by pulling slightly on brake cable housings
— apply and release parking brake several times
— check proper adjustment of parking brake
  • rear wheels can not be turned by hand when brake lever is pulled 2-4 notches
  • rear wheels must rotate freely when parking brake is released

Brake—Hydraulic Components, Regulator, Booster

Index

WARNING

Friction materials such as brake and clutch linings or brake pads may contain asbestos fibers.

Do not create dust by grinding, sanding or by cleaning with compressed air.

Avoid breathing asbestos fibers and asbestos dust.

Breathing asbestos may result in serious diseases, such as asbestosis or cancer.

Breathing asbestos may cause severe injury and death.

— Brake booster
assembly 47.10
checking 47.10
— Brake caliper
Girling (1980-1985) assembly 47.5
Girling/Teves (1980-1985), disassembling/assembling 47.6
Girling/Teves (From 1986 m.y.) assembly 47.7a
Teves (1980-1985), assembly 47.4
Teves (1980-1985), noise damping plates 47.7
— Brake fluid, changing
with US 1116 47.8
without US 1116 47.8a
— Brake hydraulic system
general repair notes 47.8
— Brake master cylinder
assembly 47.2
— Brake pressure regulator
checking 47.8a
— Brake system, bleeding
with US 1116 47.8
without US 1116 47.8a
— Check valve
checking 47.10
— Rear wheel cylinder
assembly 47.8

WARNING

Brake fluid is poisonous

CAUTION

When repairing brake master cylinder always use all parts in repair kit. Lubricate shaft of primary piston with silicone grease supplied in repair kit. Coat all other cups and pistons lightly with VW brake cylinder paste before installation

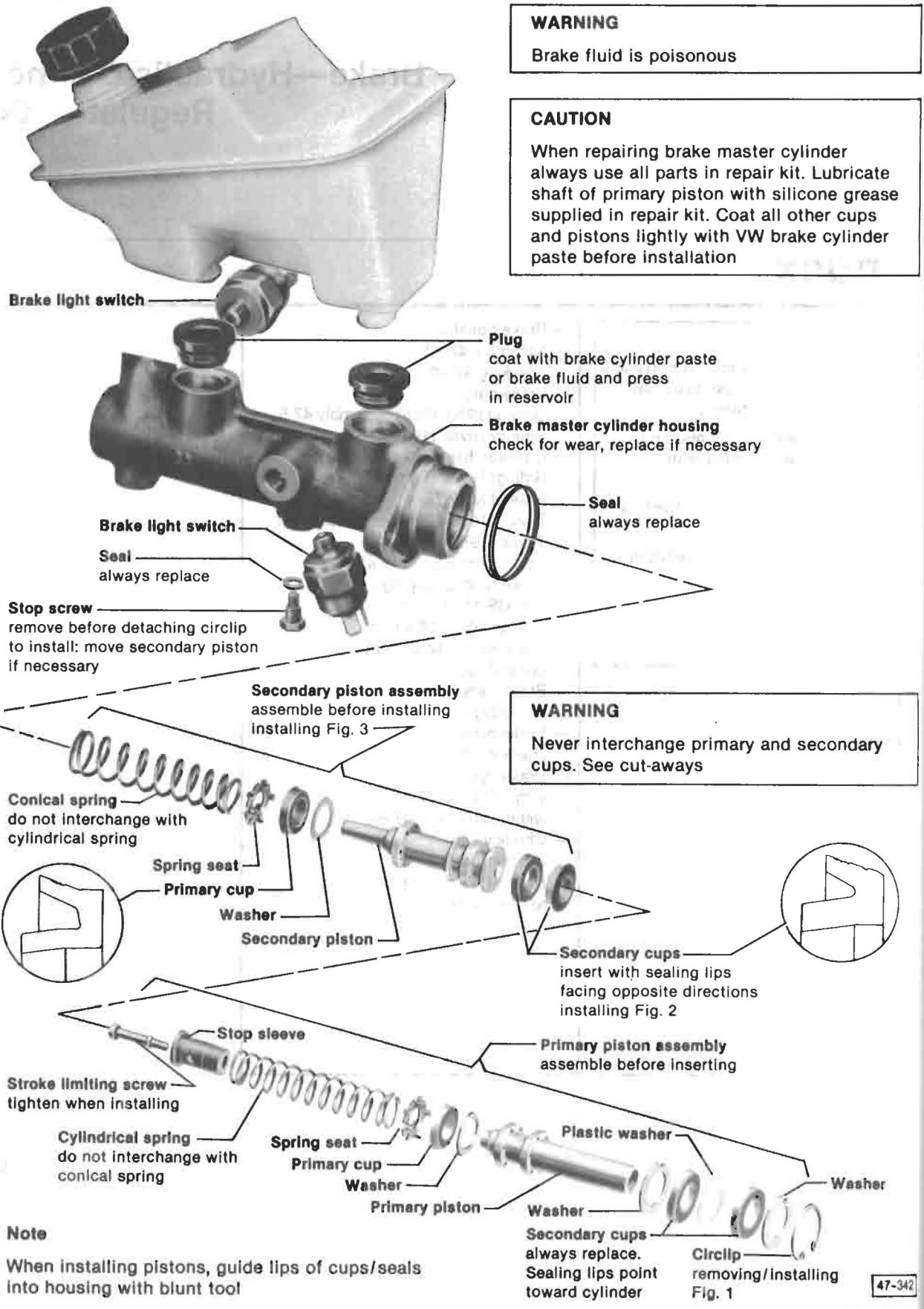

Note

When installing pistons, guide lips of cups/seals into housing with blunt tool

Note

DOT 4 brake fluid is now used in all production vehicles. The new fluid is recommended for all Volkswagen brake systems and is completely compatible with the previous DOT 3 fluid.

DOT 4 brake fluid has been phased into the spare parts program effective June, 1984.

The previous DOT 3 version brake fluid, Part No. ZVW 247 101, has been superseded to the new DOT 4 version, Part No. ZVW 239 102.

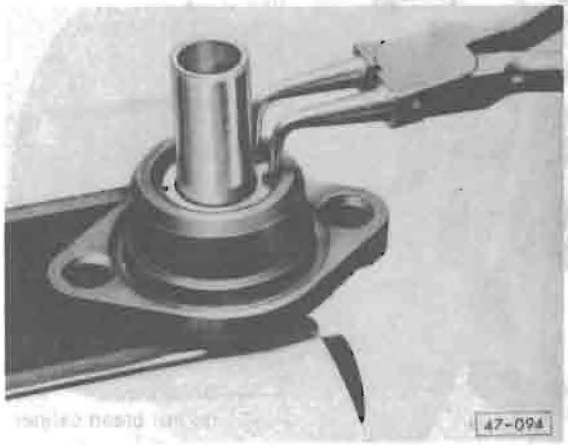

Fig. 1 Circlip, removing/installing

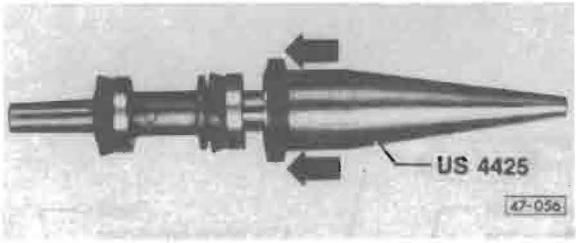

Fig. 2 Secondary cups, installing
- always use fitting sleeve US 4425

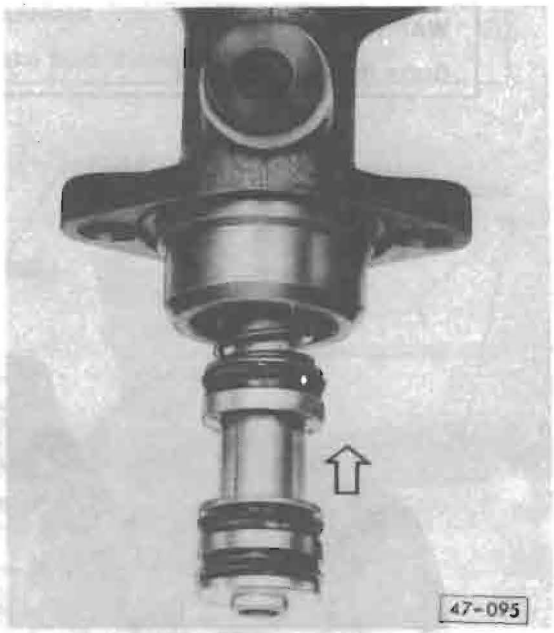

Fig. 3 Secondary piston, installing
— hold brake master cylinder with opening facing down
— guide lips of cups in carefully with blunt tool

Note

After installing brake master cylinder bleed brake system (see page 47.8)

WARNING

Brake fluid is poisonous

CAUTION

Use all parts in repair kit. Coat seals and pistons lightly with VW brake cylinder paste or equivalent before installing

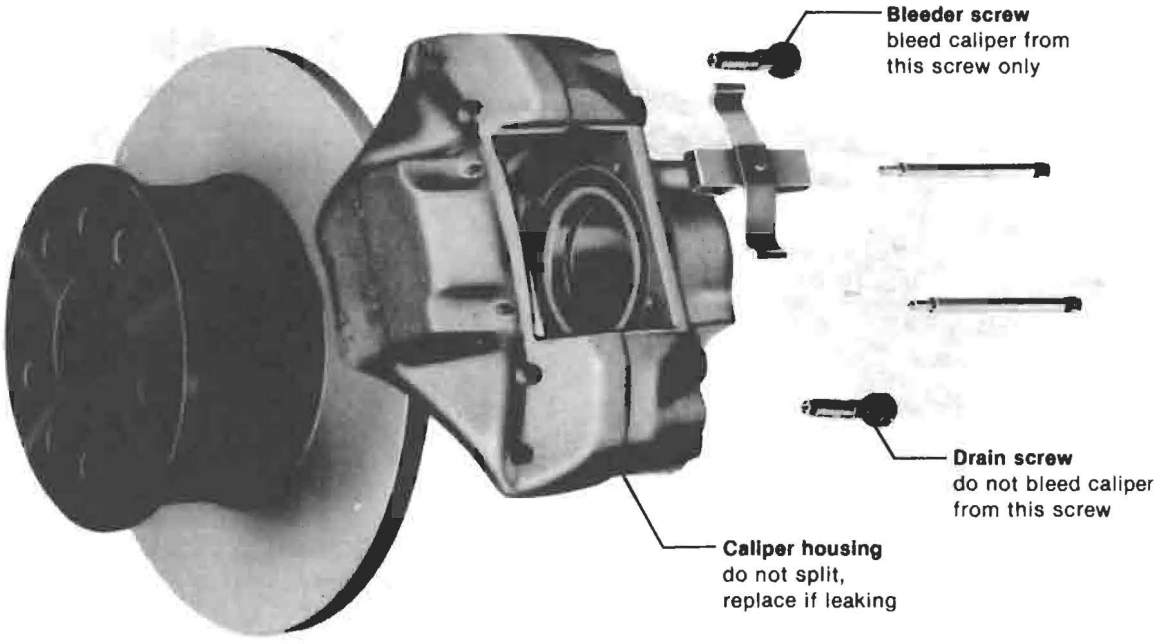

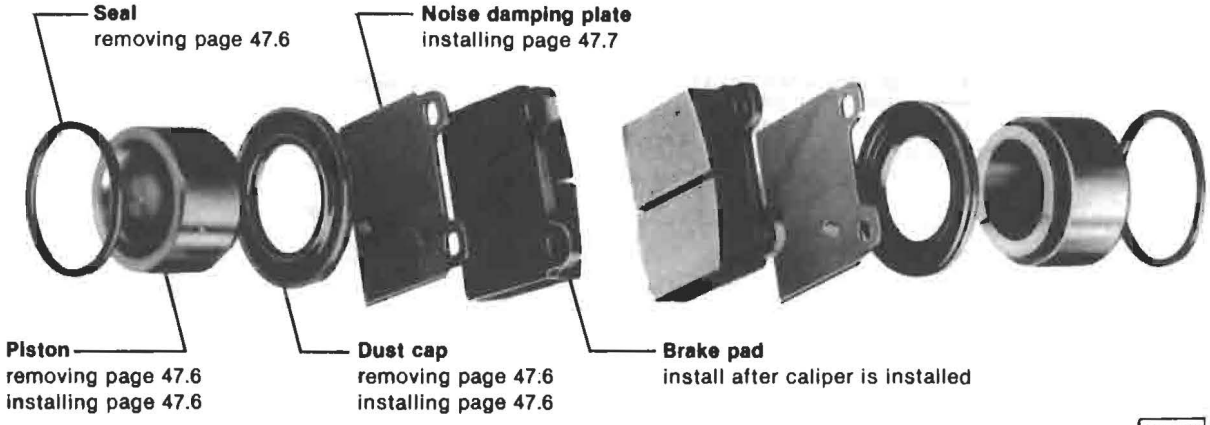

Note

Cars may have either Teves or Girling calipers

CAUTION

Use all parts in repair kit. Coat seals and pistons lightly with VW brake cylinder paste or equivalent before installing

WARNING

Brake fluid is poisonous

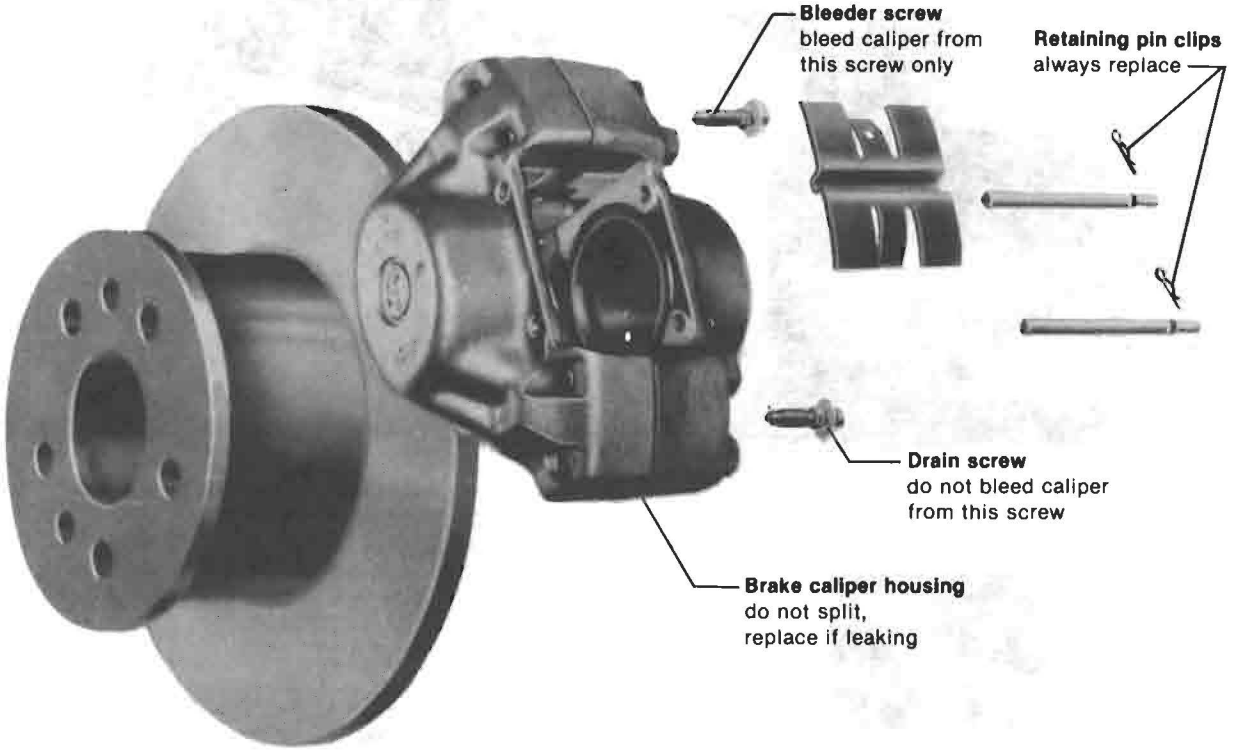

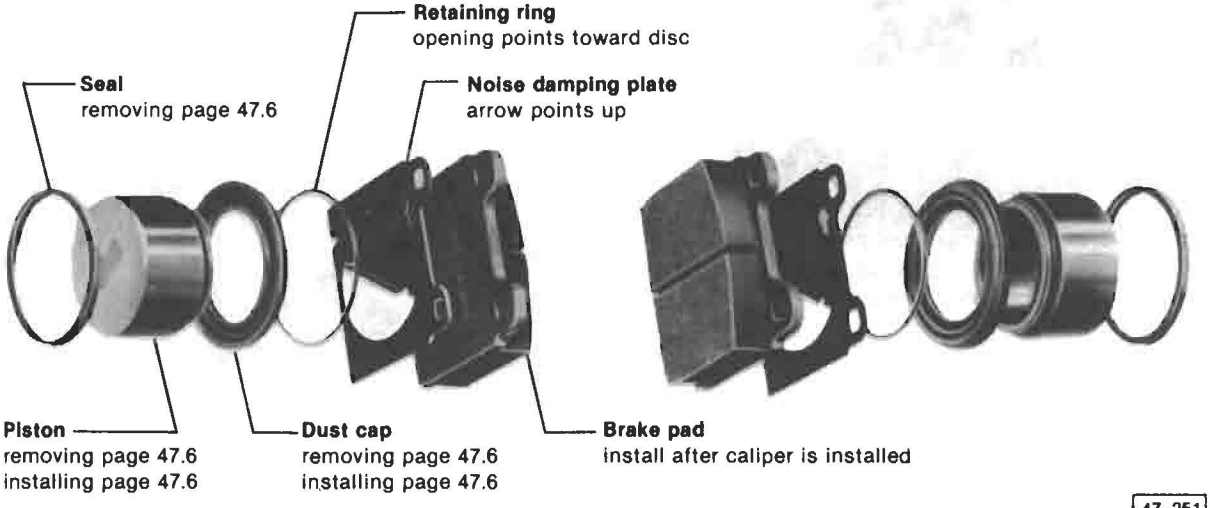

47-251

Note

Cars may have either Girling or Teves calipers

Brake caliper, disassembling

Work sequence

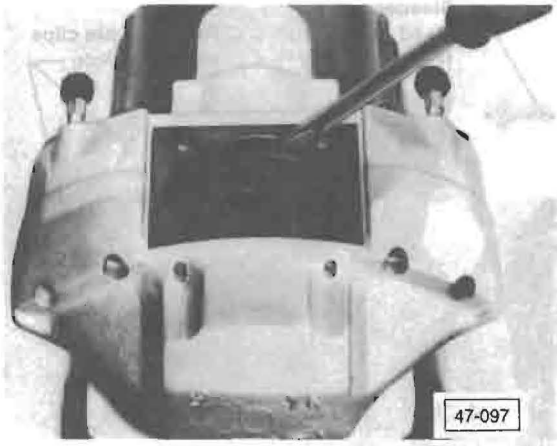

— pry dust cap out without scratching piston

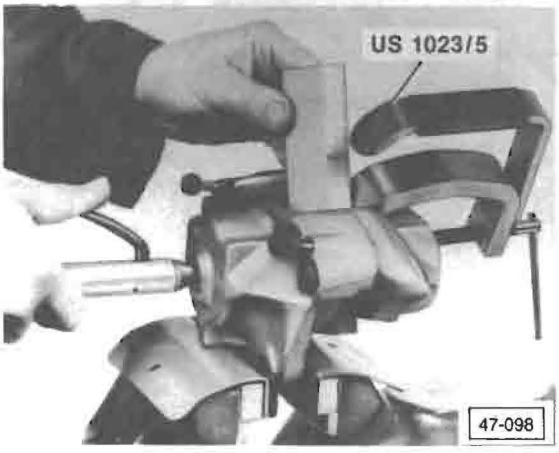

— blow out piston with compressed air

Note

Hold other piston with clamp **US 1023/5**. Place wooden block in caliper to prevent damage to piston

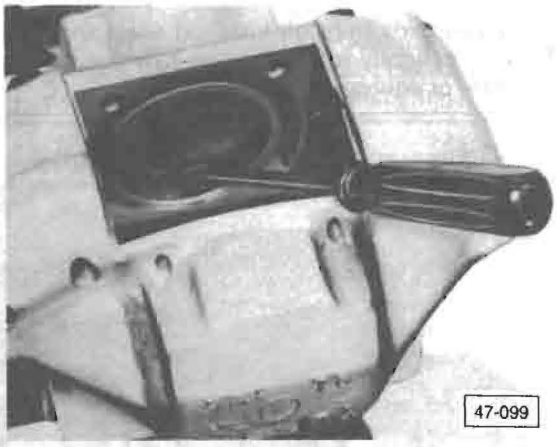

— remove seal without scratching cylinder

WARNING

Friction materials such as brake and clutch linings or brake pads may contain asbestos fibers.

Do not create dust by grinding, sanding or by cleaning with compressed air.

Avoid breathing asbestos fibers and asbestos dust.

Breathing asbestos may result in serious diseases, such as asbestosis or cancer.

Breathing asbestos may cause severe injury and death.

Brake caliper, assembling

Work sequence

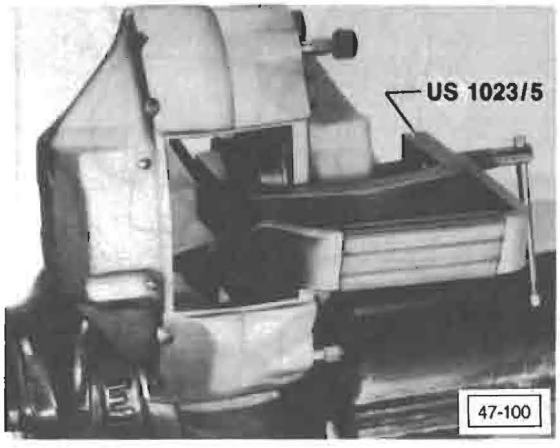

— install seal
— lubricate piston and cylinder bore lightly with brake cylinder paste
— press in piston with installing clamp

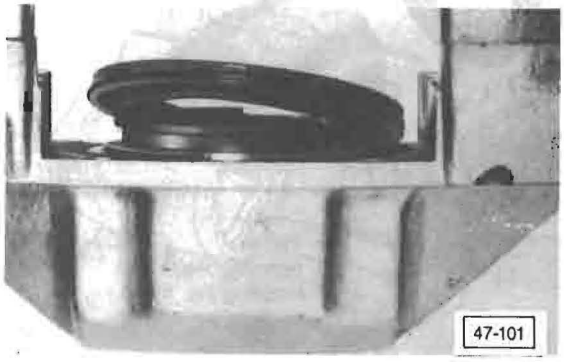

— install dust cap by hand

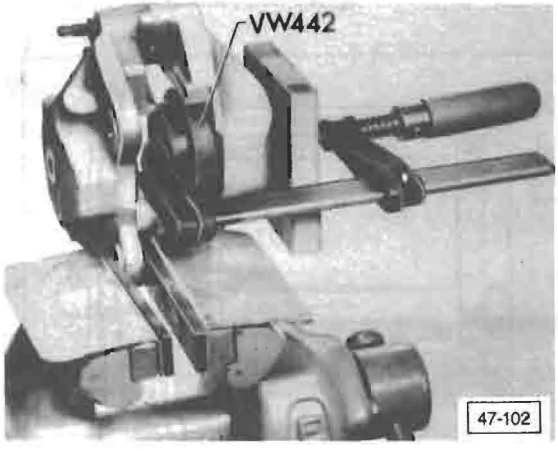

— press dust cap with **VW 442** against recess
  • piston is now fully seated

Noise damping plates, installing
(Teves caliper)

Work sequence

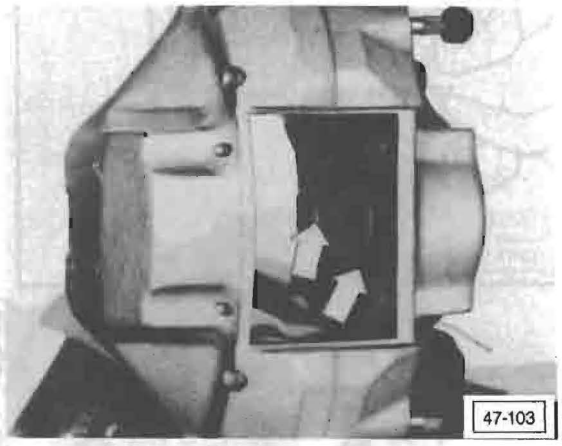

— insert noise damping plates and check position of piston
  • recess in piston (arrows) point against direction of brake disc rotation when moving forward. Lugs on noise damping plates engage in recess on piston

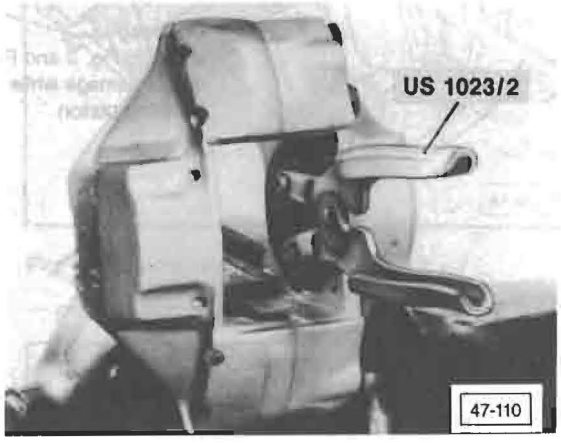

— if necessary readjust position of piston by using turning pliers **US 1023/2**

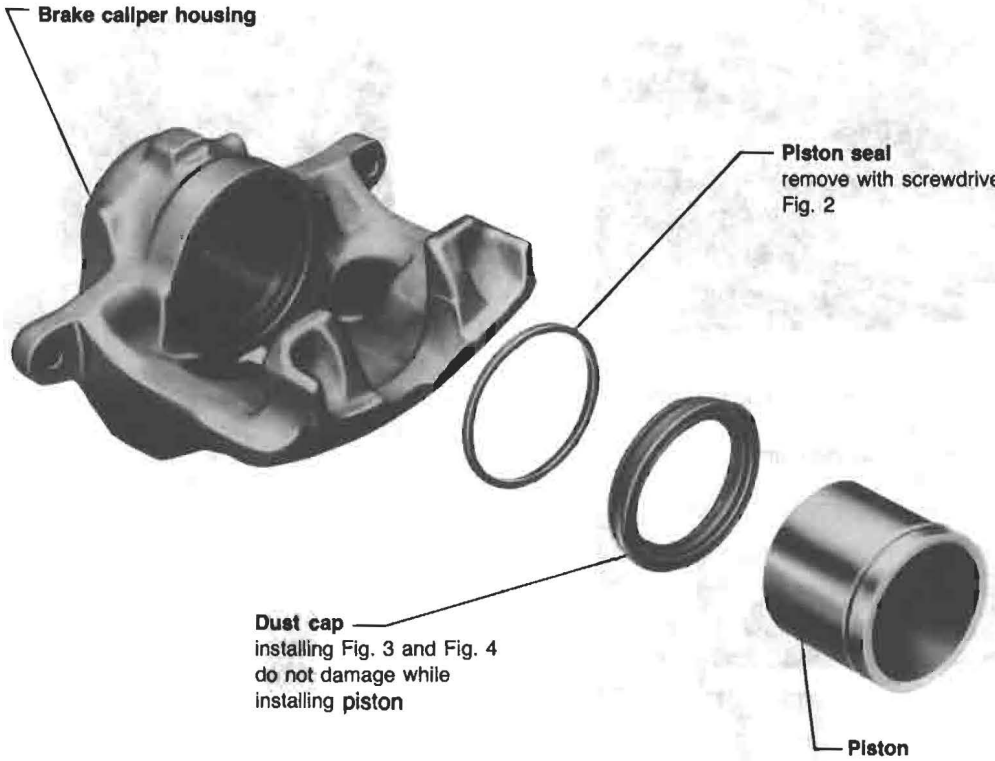

CAUTION

Use all parts in repair kit. Coat seals and pistons lightly with VW brake cylinder paste or equivalent before installing.

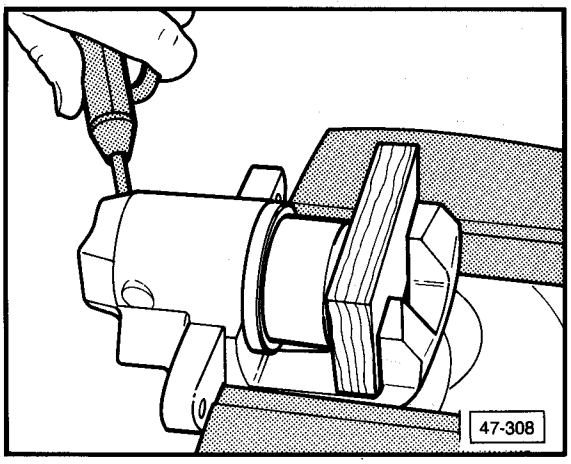

Fig. 1 Caliper piston, removing with compressed air

Note

Place a wooden block in caliper to prevent damage to piston.

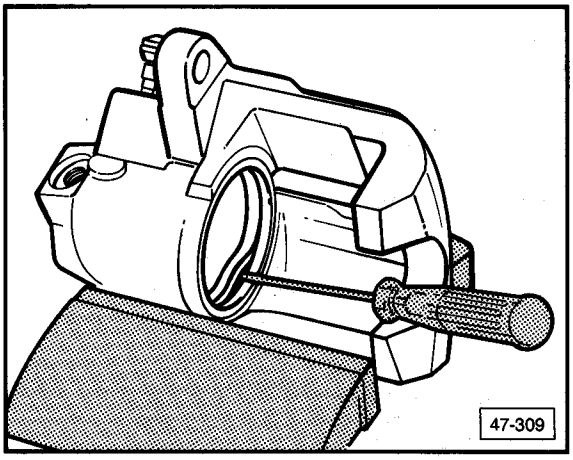

Fig. 2 Piston seal, removing

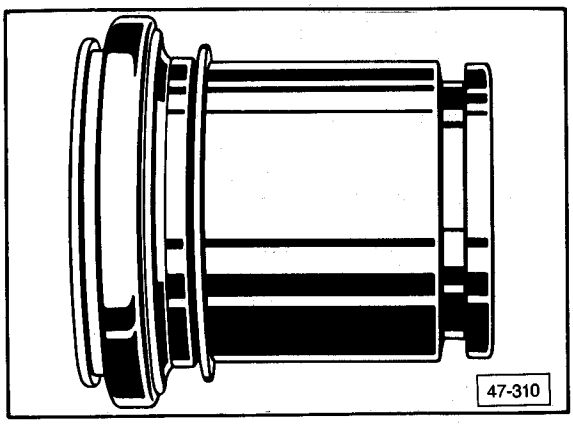

Fig. 3 Dust cap, installing

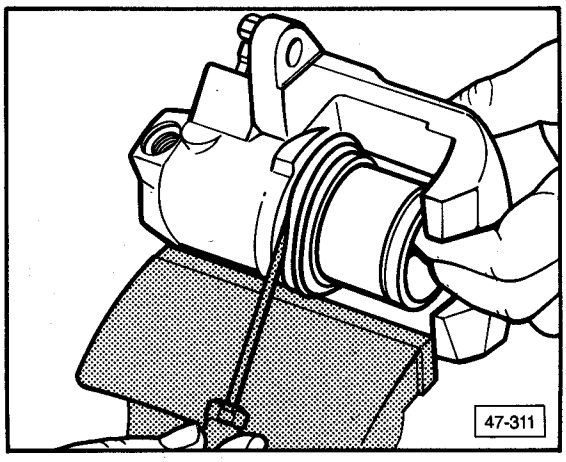

Fig. 4 Piston and dust cap, installing

— insert inner lip of cap into groove in cylinder while holding piston

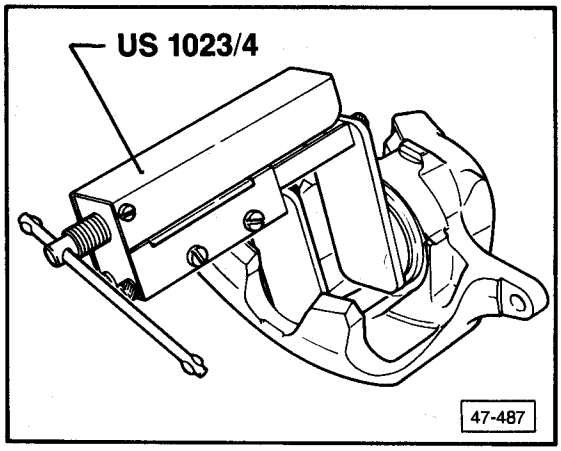

Fig. 5 Piston, installing

— press piston as far as it will go

CAUTION

Outer lip of dust cap must slip into groove in piston.

Rear wheel cylinder, disassembling/assembling

CAUTION

When repairing wheel cylinders always use all parts of repair kit.

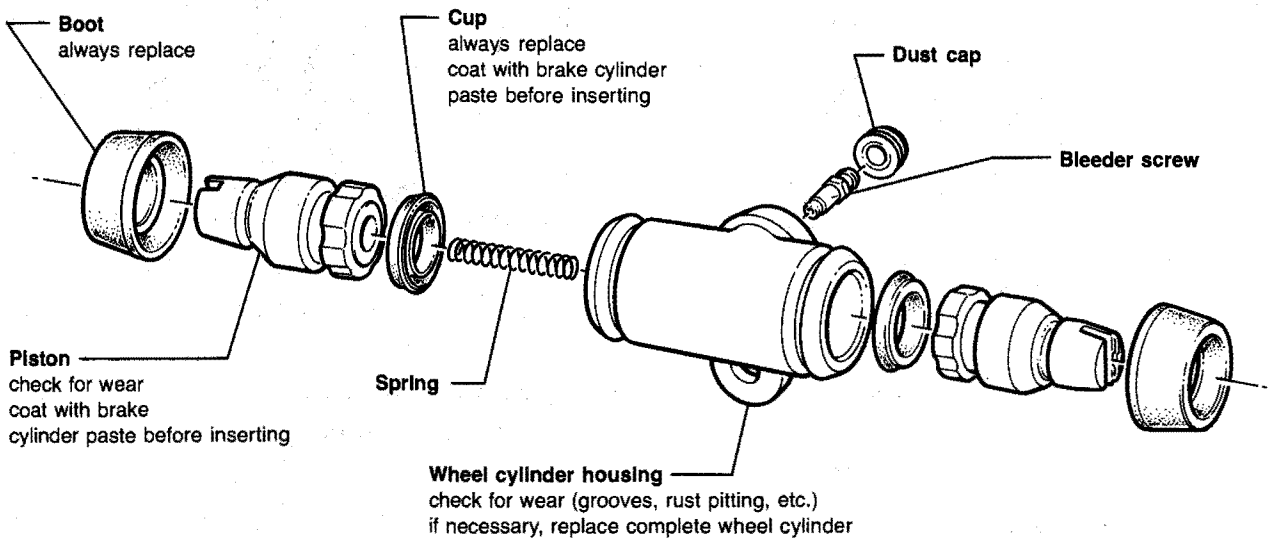

47-605

Brake hydraulic system

General repair notes

WARNING

Brake fluid is poisonous. Do **NOT** siphon by mouth.

CAUTION

Brake fluid must **NOT** come into contact with paint.

Brake fluid absorbs moisture from air and must be replaced every 2 years.

Only use new DOT 3 or DOT 4 brake fluid according to SAE recommendation J 1703 and conforming to MOTOR VEHICLE SAFETY STANDARD 116. Do **NOT** add or mix DOT 5 silicone type brake fluid with brake fluid in car as severe component corrosion may result. Such corrosion could lead to brake system failure.

Brake system, bleeding

Whenever possible use pressure bleeder (**US 1116**). To bleed brake system, use bottle with transparent hose attached so that brake fluid can be checked for air bubbles.

Do **NOT** re-use fluid removed from reservoir. Water and other contaminants in fluid can cause brake performance problems.

On vehicles with brake booster, turn engine **OFF** and then disconnect vacuum hose/check valve from brake booster prior to bleeding brake system. When bleeding brake system **push lever on brake pressure regulator in direction of rear axle.**

(With pressure bleeder US 1116)

— connect pressure bleeder **US 1116** to brake fluid reservoir. Turn bleeder switch to **ON** position

— connect hose from bleeder bottle to bleed screws and bleed brakes in following sequence:
1. Right rear wheel cylinder/caliper
2. Left rear wheel cylinder/caliper
3. Right front caliper (upper screw)
4. Left front caliper (upper screw)

— after bleeding, fill reservoir to maximum mark

(Without pressure bleeder US 1116)

— connect hose from bleeder bottle to bleed screws using previously mentioned sequence
— pump brake pedal several times and then hold pedal down
— open bleed screw, with pedal depressed
— close bleed screw, with pedal depressed
— release brake pedal
— repeat operation until brake fluid flows without air bubbles

Brake fluid, changing

> **CAUTION**
>
> The brake fluid level in the reservoir must never fall below the **MIN** mark during the fluid replacement procedure.

(With pressure bleeder US 1116)

— connect pressure bleeder **US 1116** to brake fluid reservoir. Turn bleeder switch on **ON** position
— connect hose from bleeder bottle to bleed screws, using sequence in the table provided
• specified amount of fluid must flow out

Bleeding sequence	Volume of brake fluid to be extracted from cylinders/calipers
right rear	500 cm³ (30.5 in.³)
left rear	500 cm³ (30.5 in.³)
right front, lower	500 cm³ (30.5 in.³)
right front, upper	100 cm³ (6.1 in.³)
left front, lower	500 cm³ (30.5 in.³)
left front, upper	100 cm³ (6.1 in.³)

— fill the system with new brake fluid
— bleed as described previously

(Without pressure bleeder US 1116)

Follow the same procedure for bleeding brakes without a pressure bleeder, covered in this section. Remove brake fluid until the new fluid flows without air bubbles.

Brake pressure regulator, checking

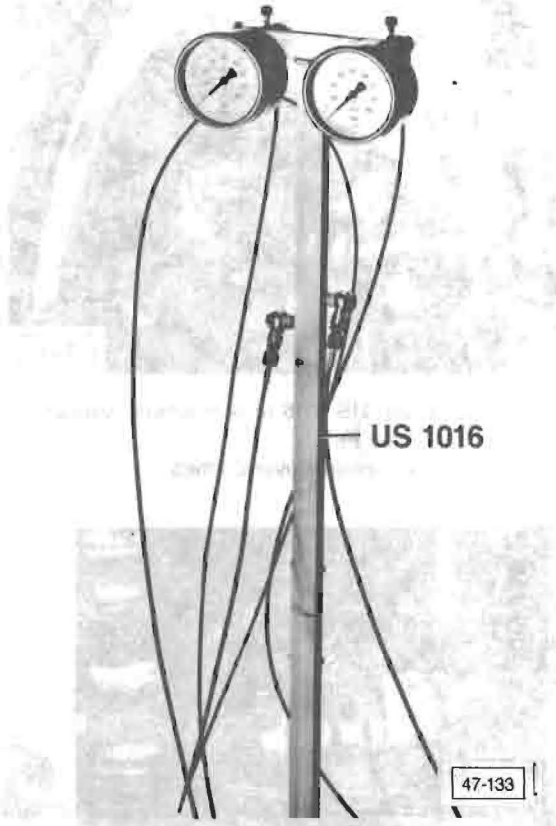

— lift vehicle with hoist

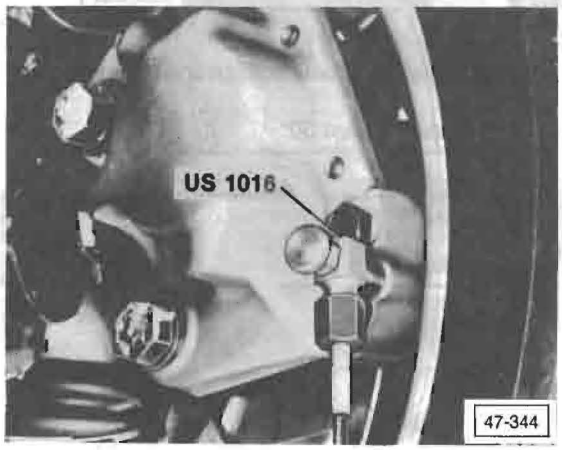

— connect gauge **US 1016** to front brake caliper

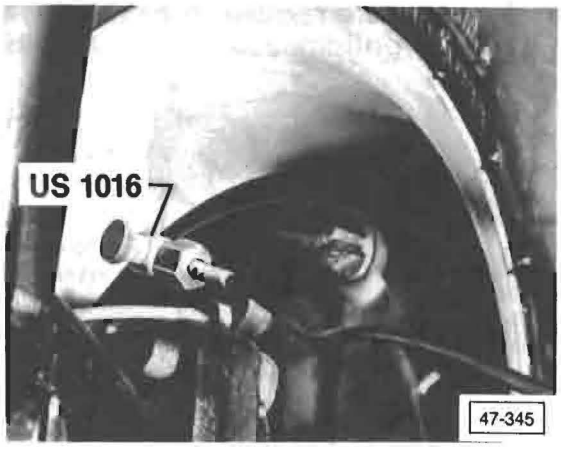

— connect gauge **US 1016** to rear wheel cylinder
— bleed both gauges
— depress brake pedal several times

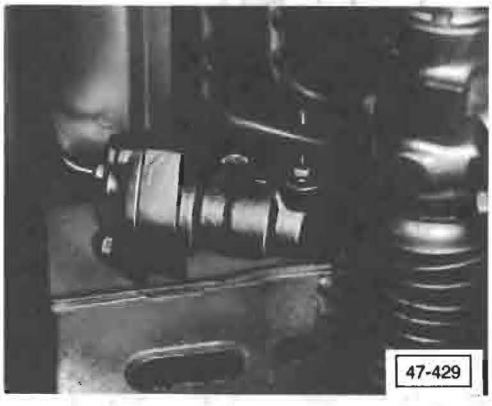

— remove nuts holding regulator
— press brake pedal until both gauges read 50 bar (725 psi)
— tilt regulator forward 30°

CAUTION

Do not damage brake lines.

— increase pressure on brake pedal until gauge connected to front brake caliper reads 100 bar (1450 psi)
  • pressure at gauge connected to rear wheel cylinder must read 55-65 bar (798-943 psi)

if **NO**, replace brake pressure regulator

— reinstall regulator

CAUTION

Note installation position. Bolt heads must face forward (driving) direction.

— disconnect gauges
— bleed brakes

Brake booster, checking

— depress brake pedal firmly several times with engine off to exhaust vacuum in system
— depress pedal with medium pressure and hold
— start engine
  • if brake booster is working properly, pedal will fall slightly and then hold

Note

Brake boosters are supplied from two different manufacturers. They are identified, "ATE" for the Teves Co. and "BENDIX" for the Bendix Co. A Teves booster is shown in the illustration.

Complete boosters can be used as replacements for each other, independent of manufacturer (i.e. a Teves booster can be combined with a Bendix master cylinder or vice versa).

CAUTION

Do not repair brake booster. If necessary, replace.

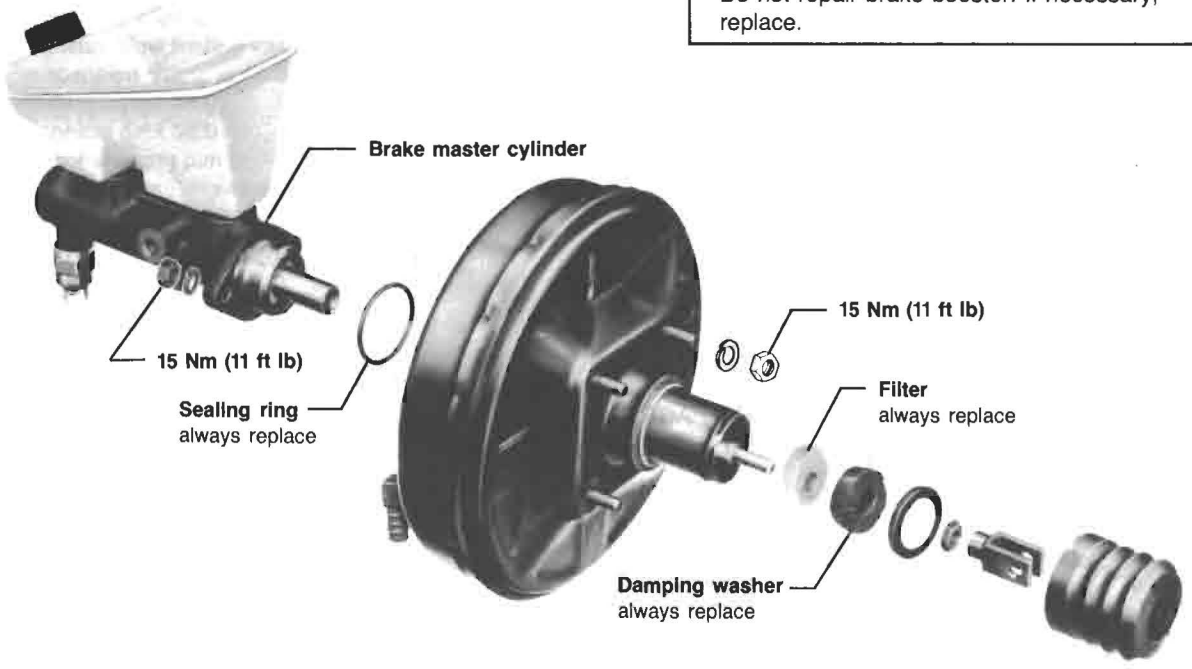

Check valve, checking
(install in vacuum hose)

— remove valve (arrow) from hose
— blow through valve in direction of arrow (on housing)
  • air must pass through valve
— blow through valve in opposite direction
  • no air must pass through valve

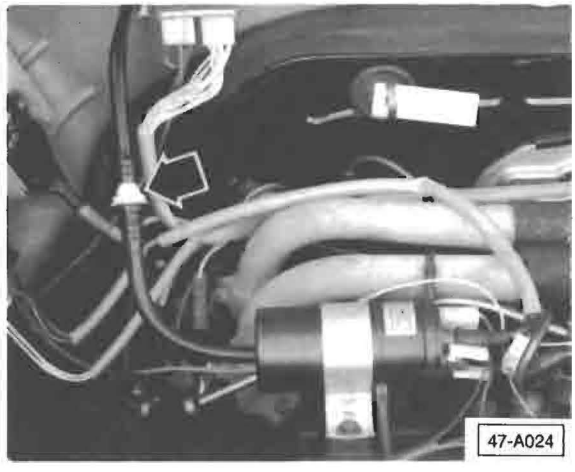

Index

— Power steering
checking for leaks 48.7
pressure/flow limiting valve 48.11
suspension changes 48.6
system layout 48.6
technical data 48.6
— Power steering pump
removing/installing 48.9
repairing 48.10
— Power steering pump pressure
checking 48.7
— Power steering system
filling/bleeding 48.7
— Steering column
switches 48.2
— Steering drive/gear 48.4
— Steering lock
assembly 48.3
— Steering wheel/column 48.2
— Tie rods 48.4
removing 48.5
— Troubleshooting 48.12-48.17

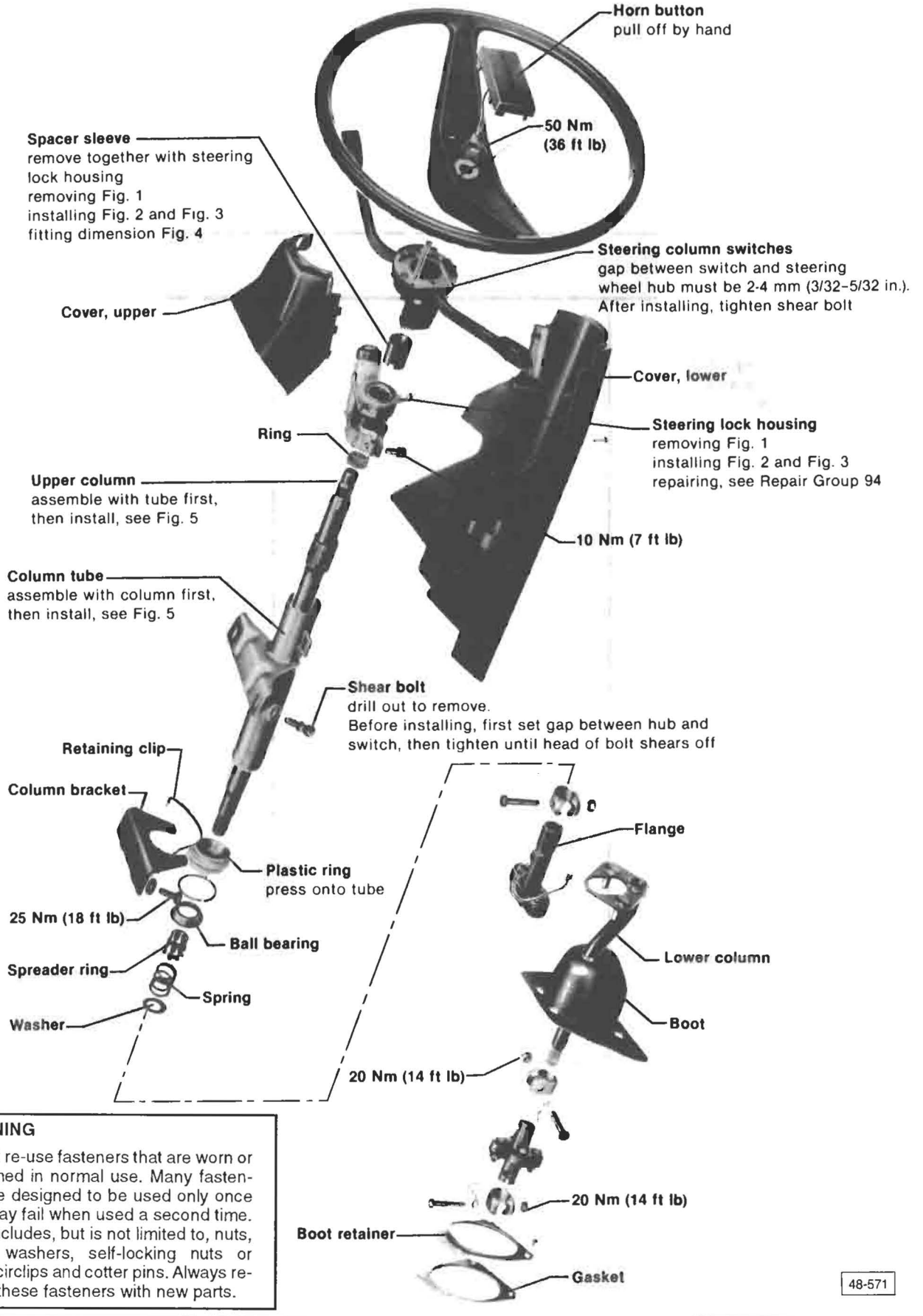

WARNING

Do not re-use fasteners that are worn or deformed in normal use. Many fasteners are designed to be used only once and may fail when used a second time. This includes, but is not limited to, nuts, bolts, washers, self-locking nuts or bolts, circlips and cotter pins. Always replace these fasteners with new parts.



Fig. 1 Steering lock housing, removing

— pull off steering lock housing together with spacer sleeve



Fig. 2 Steering lock housing/spacer sleeve, installing

— when installing spacer sleeve, clamp steering column at top and bottom

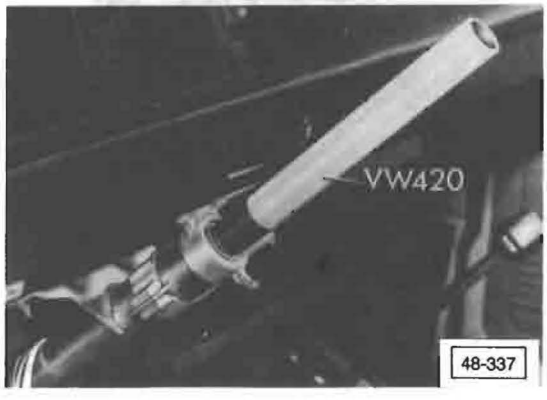

Fig. 3 Steering lock housing/spacer sleeve, installing

— note dimension **a** of Fig. 4

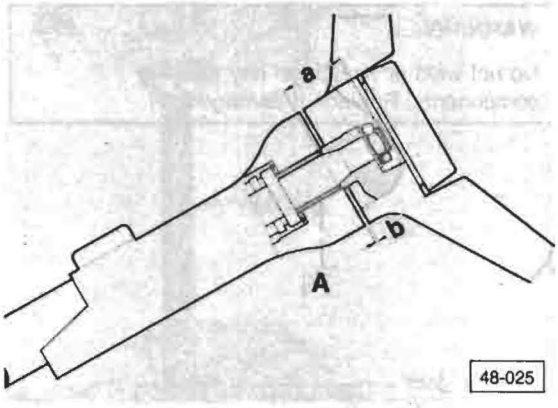

Fig. 4 Spacer sleeve, installation dimension

A = spacer sleeve
a = 51 mm + 5 mm (2.0 in. + 13/64 in.)
b = 2-4 mm (3/32-5/32 in.)

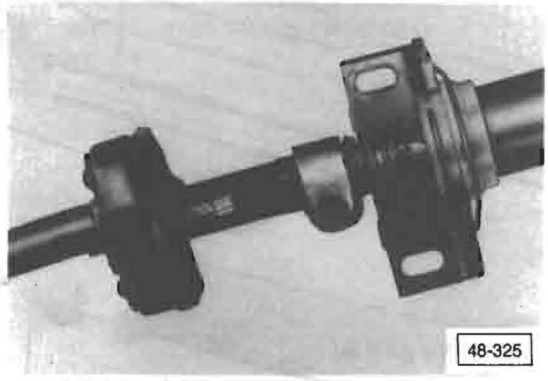

Fig. 5 Upper steering column/column tube, assembling

WARNING

Do not weld or straighten any steering components. Replace if damaged.

CAUTION

Only use special steering gear grease Part Number **AOF 063 000 04**, or equivalent, to lubricate steering gear.

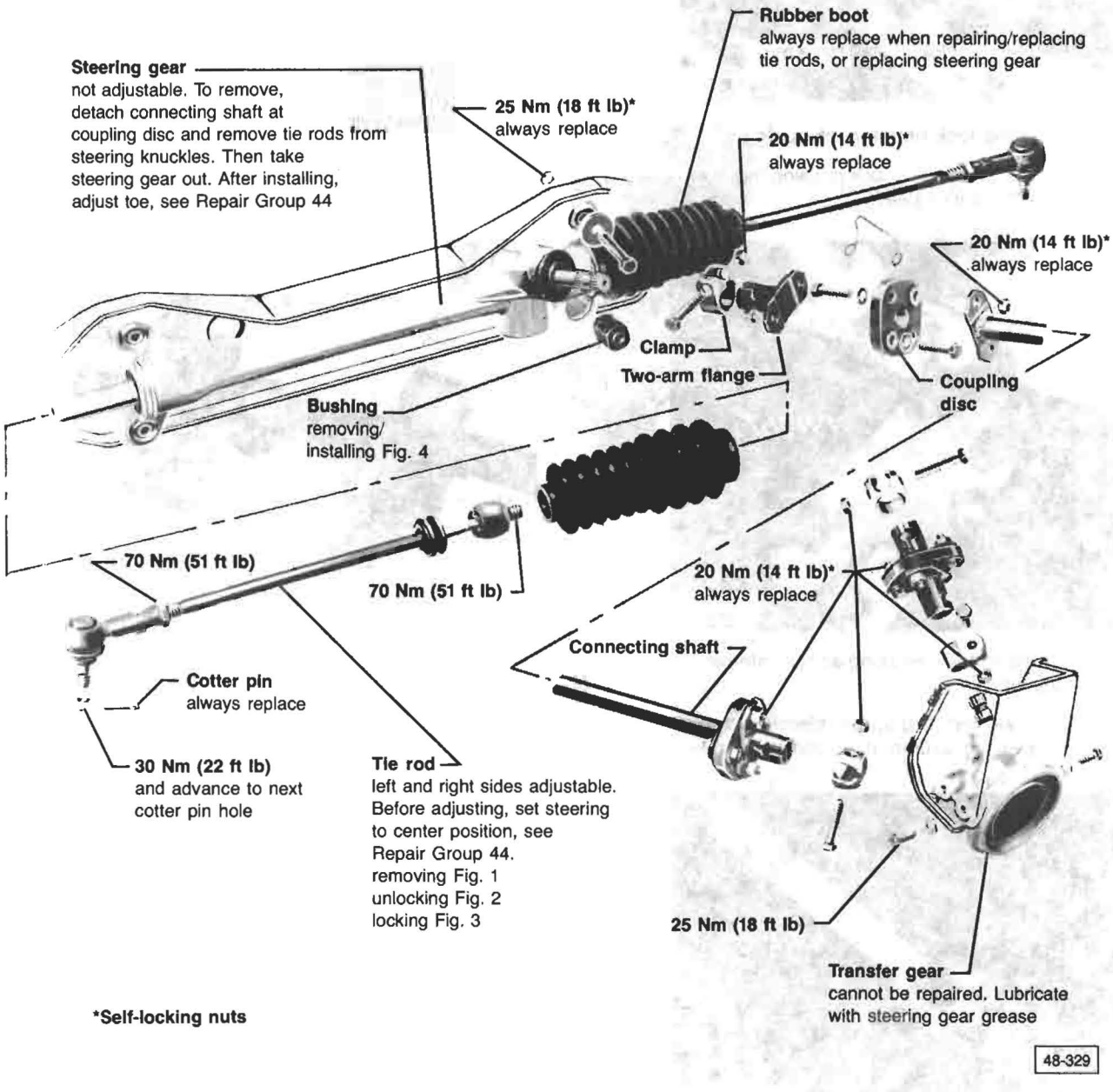

*Self-locking nuts

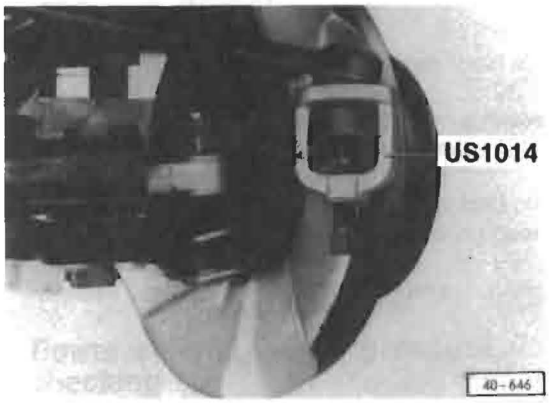

Fig. 1 Tie rod, removing

— press tie rod off steering knuckle

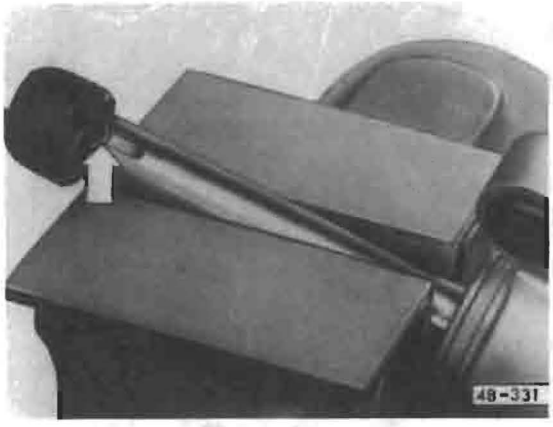

Fig. 2 Tie rod, unlocking

— unlock tie rod (arrow) from steering gear

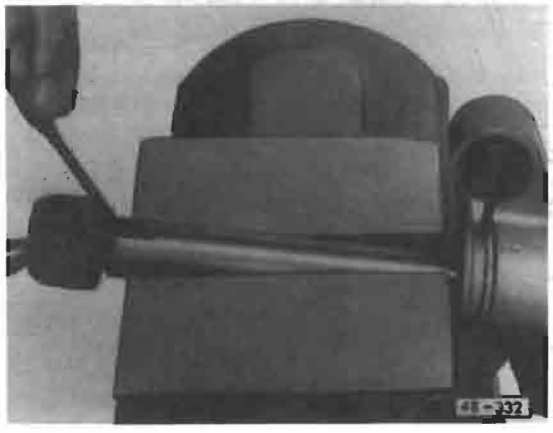

Fig. 3 Tie rod, locking

— tighten tie rod to 70 Nm (51 ft lb) and lock

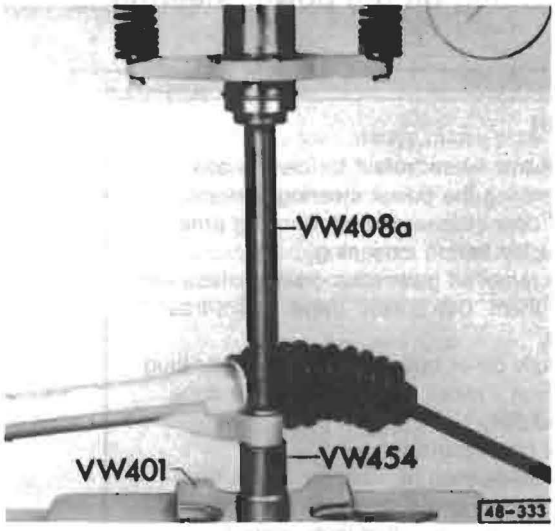

Fig. 4 Bushing, removing/installing

— press out or in as shown
- flat surface of bushings must be vertical when rack is installed in vehicle

When working on the power steering system

CAUTION

Always follow these "rules" for cleanliness when repairing the power steering system:

1. Clean connections and surrounding area thoroughly before loosening.
2. Place removed parts on a clean surface and cover them. Use plastic, paper or lint-free cloths.
3. Carefully cover opened components or plug openings if repair is not going to be done immediately.
4. Install clean parts only.
   - do not remove replacement parts from packaging until just before installation
   - do not use parts that were stored unpacked
5. When the power steering hydraulic system is opened:
   - do not use compressed air in the immediate area
   - do not move the vehicle unless absolutely necessary

Power steering system layout

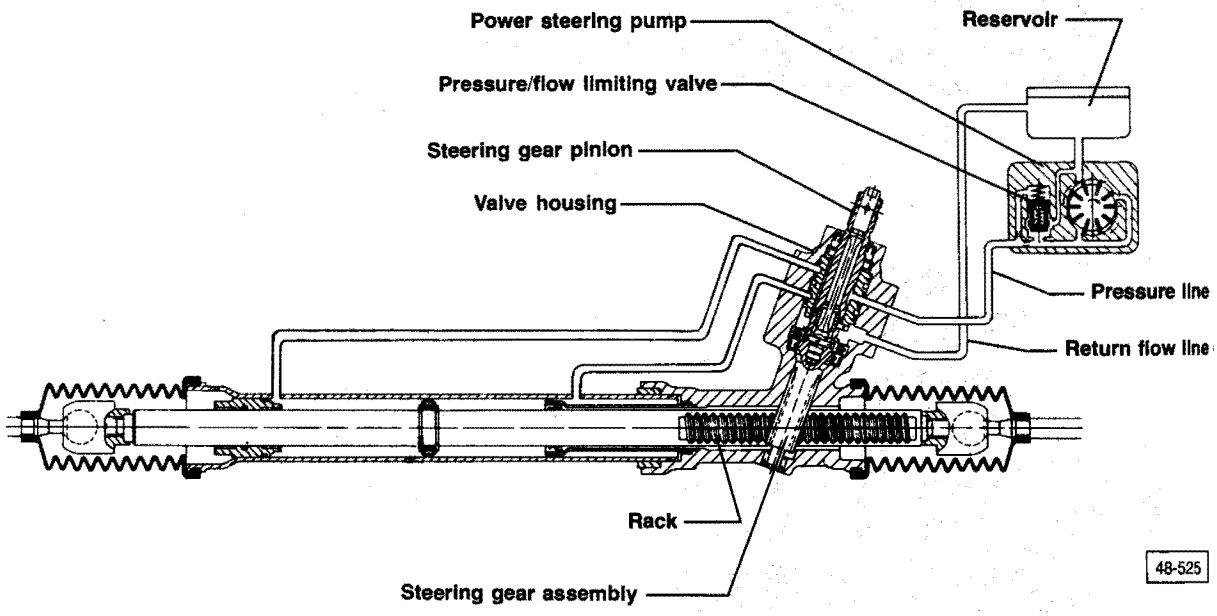

Suspension changes for power steering

- steering knuckles are different
- coupling disc (between steering gear pinion and transfer gear connecting shaft) has been replaced by universal joint

Technical data for power steering

Lubricant capacity	1.25L (1.3 US qt)
Type	ATF Dexron®
System pressure (at idle)	115-120 bar/1668-1740 psi

Steering system, checking for leaks (engine running)

— rotate steering wheel lock to lock and hold at limit of travel (no longer than 5 sec.)
— check all line connections and tighten if necessary
— if leak occurs at steering pinion, replace steering gear assembly
— if steering rack seals are leaking (pull boot off steering gear to check), replace steering gear assembly
— check power steering pump for leaks

Power steering pump pressure, checking



— connect pressure gauge **US 1074 B** between pressure line and valve housing (valve in **open** position)

Note

When installing gauge, turn it upwards as far as possible.

— start engine and run at idle
— top up ATF in reservoir if necessary
— close valve (no longer than 5 sec.)
— read pressure
  • 115-120 bar (1668-1740 psi)
— if pressure differs, check pressure/flow limiting valve, see page 48.12
— if pressure/flow limiting valve **OK**, replace power steering pump

Power steering system, filling/ bleeding

CAUTION

If ATF level is too low, always check power steering system for leaks. Always fill and bleed power steering system with ATF after opening system for repair. Do **not** reuse fluid which has been drained. Always replace power steering filter in reservoir when changing ATF.

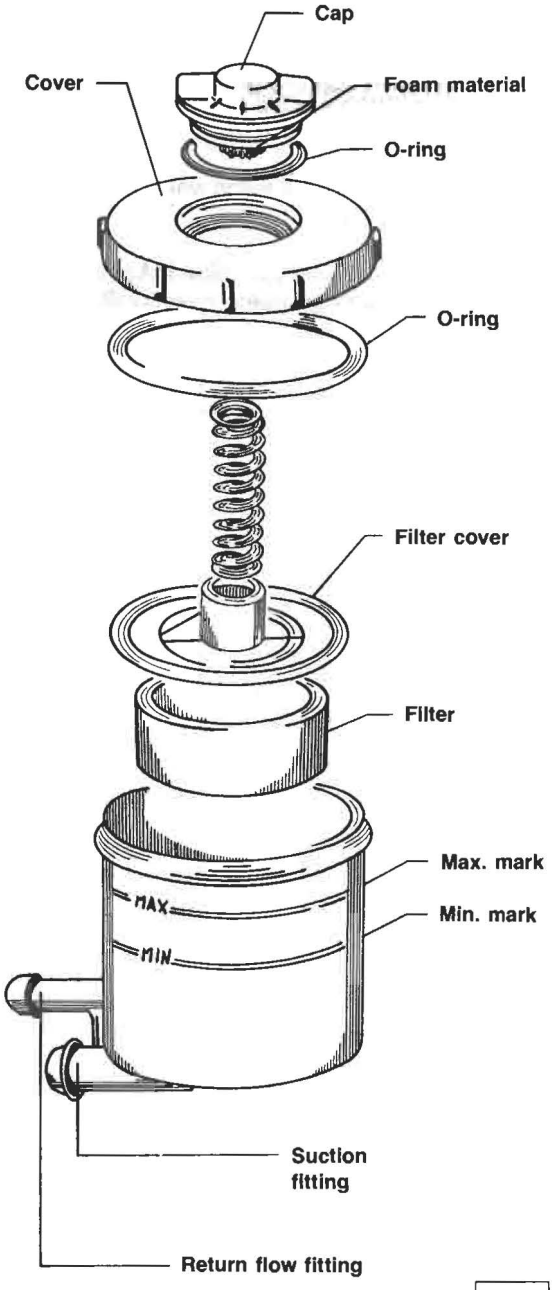

Power steering reservoir

— fill power steering reservoir to **MAX** with ATF
— lift front of vehicle
— with engine **off**, rotate steering wheel from lock to lock
— top up reservoir to **MAX** mark
— start engine briefly several times (switch **OFF** immediately after engine starts)
— add ATF until level is maintained at **MAX** mark

CAUTION

Do **not** allow reservoir to be pumped dry.

— when ATF level no longer drops, start and run engine
— rotate steering wheel lock to lock several times

Note

Do not use more force on steering wheel than necessary to turn wheel.

— add more ATF if level drops below **MAX** mark
— check that no bubbles appear in reservoir and level remains constant

Power steering pump, removing/installing

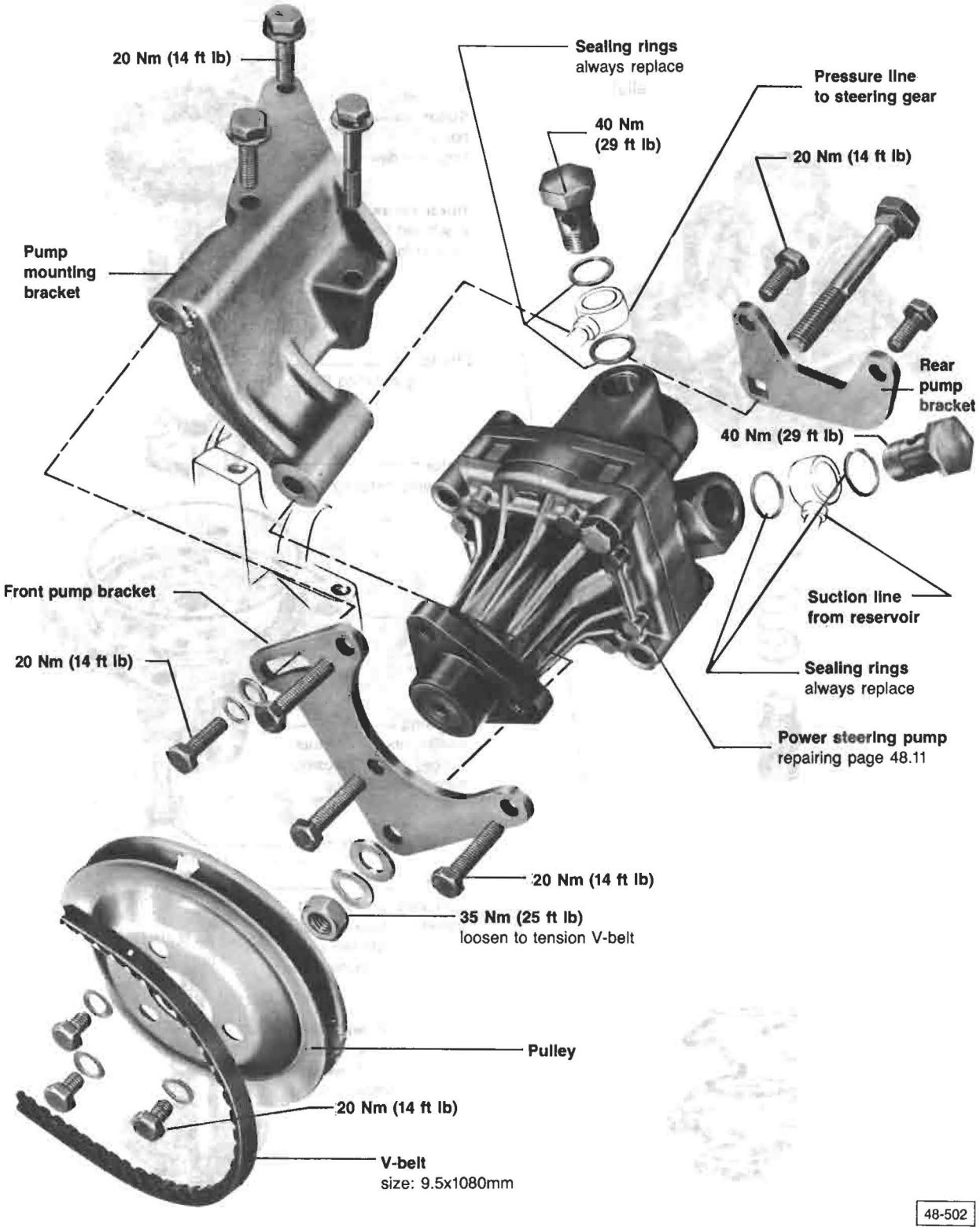

Power steering pump, repairing

Note

When repairing pump, replace all parts marked with an asterisk.

Coat all sealing components with ATF on installation.

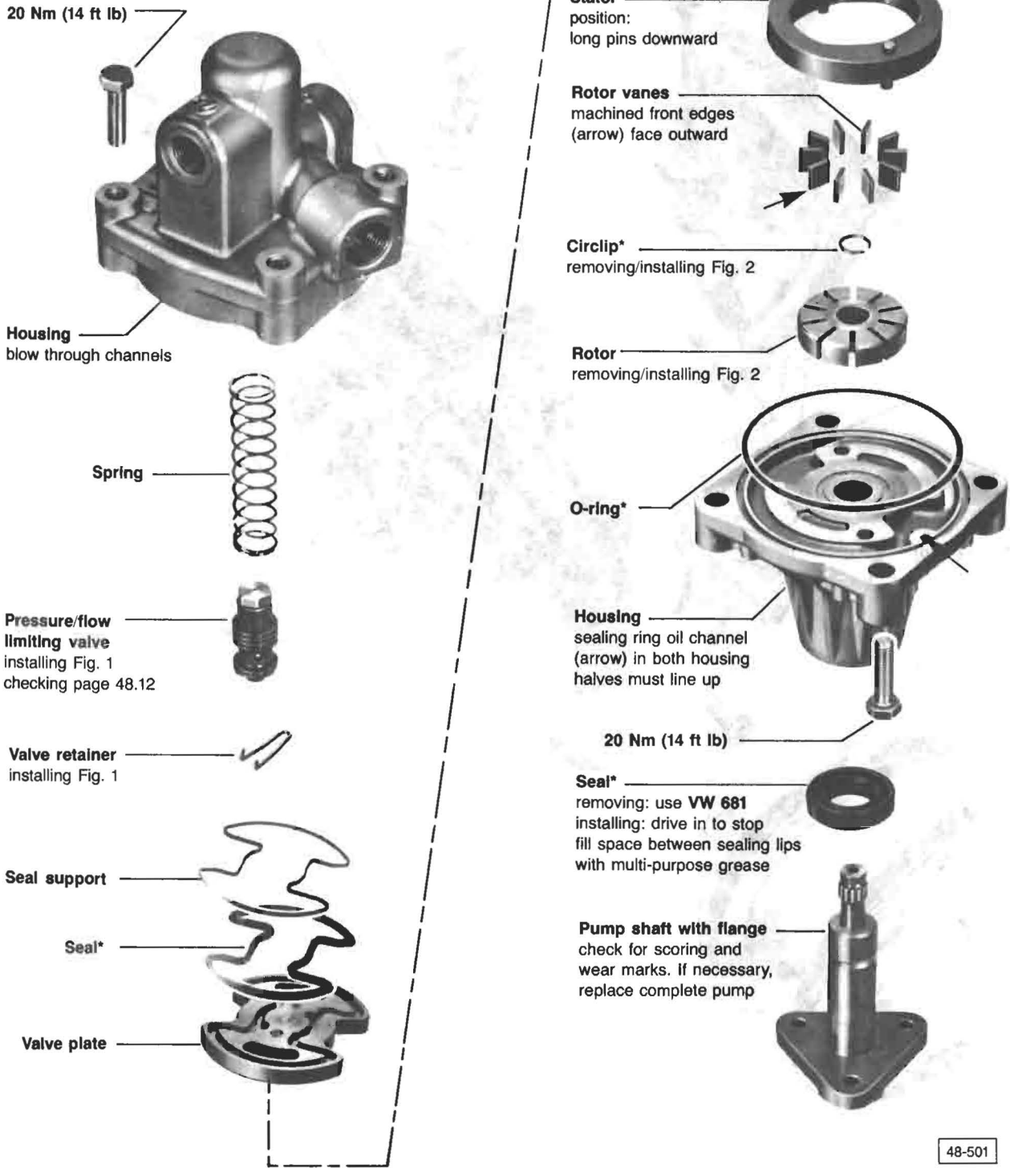

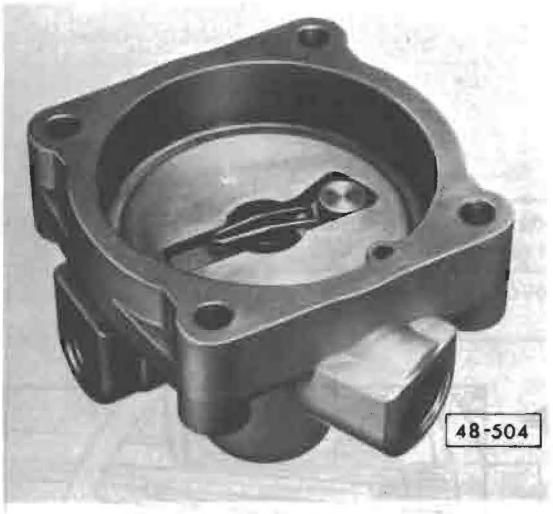

Fig. 1 Pressure/flow limiting valve retainer, installing

— install angled ends of retainer in housing slot
— press down angled ends with screwdriver

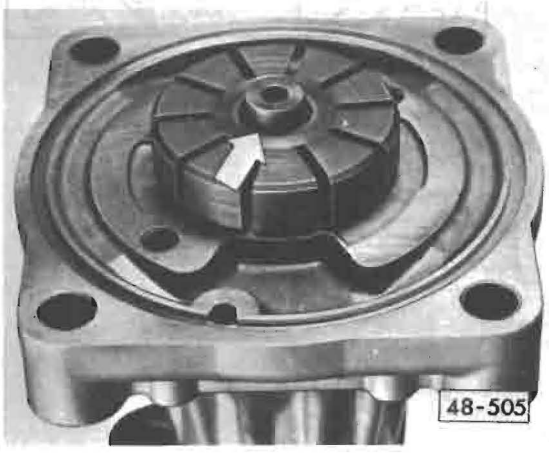

Fig. 2 Rotor and shaft, removing/installing

Note

Rotor and shaft must be removed from housing to replace pump shaft seal.

— press rotor down
— remove circlip from groove (arrow)
— after installing rotor and shaft, secure circlip by pulling rotor up

Note

Circlip must fit properly in groove and be secured by

Pressure/flow limiting valve, checking

Note

Incorrect functioning of pressure/flow limiting valve causes periodic lack of steering assistance.

— check valve and housing bore for wear
  • valve drillings must be completely clear of any dirt or restriction
  • valve must move freely in housing bore
— if maximum pump pressure is not obtained after checking pressure/flow limiting valve, replace complete power steering pump

Troubleshooting

Use the following procedure to troubleshoot complaints of heavy or stiff steering:

Test conditions

- vehicle at room temperature (approximately 68°F)
- vehicle raised on hoist
- steering turned 3 times from lock to lock at steering wheel

— measure turning torque of complete steering gear at steering wheel

value less than 300 Ncm (26 in. lb)*	value greater than 300 Ncm (26 in. lb)*
go to **A** on page 48.13	steering system **OK**

End

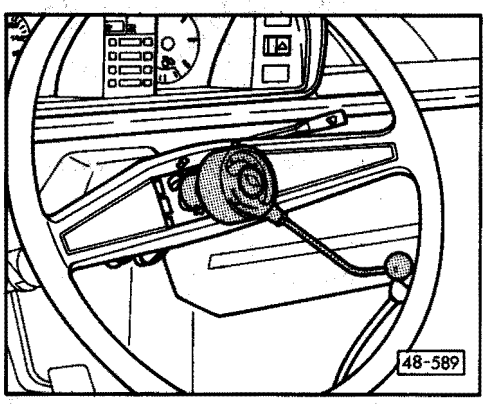

*vehicles with
0-1000 km (1600 mi) = 300 Ncm (26 in. lb)

vehicles with
1000-3000 km (1600-4800 mi)
= 230 Ncm (20 in. lb)

vehicles with more than
3000 km (4800 mi) = 170 Ncm (15 in. lb)

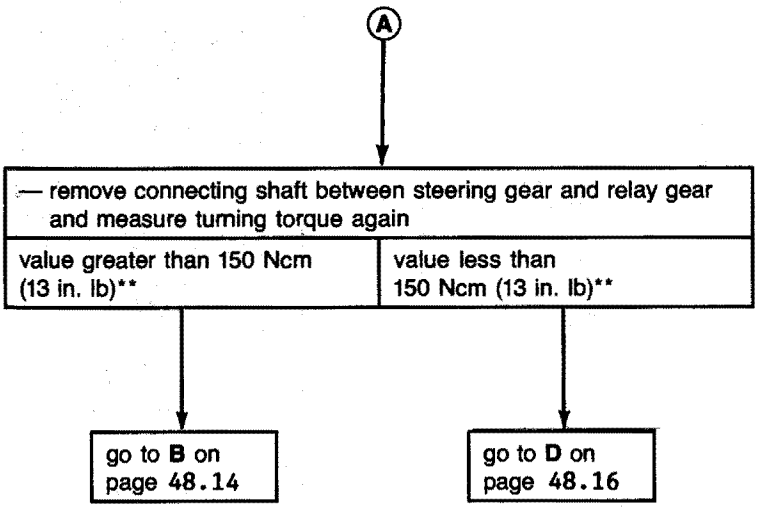

**vehicles with
0-1000 km (1600 mi) = 150 Ncm (13 in. lb)

vehicles with
1000-3000 km (1600-4800 mi)
= 130 Ncm (11 in. lb)

vehicles with more than
3000 km (4800 mi) = 110 Ncm (10 in. lb)

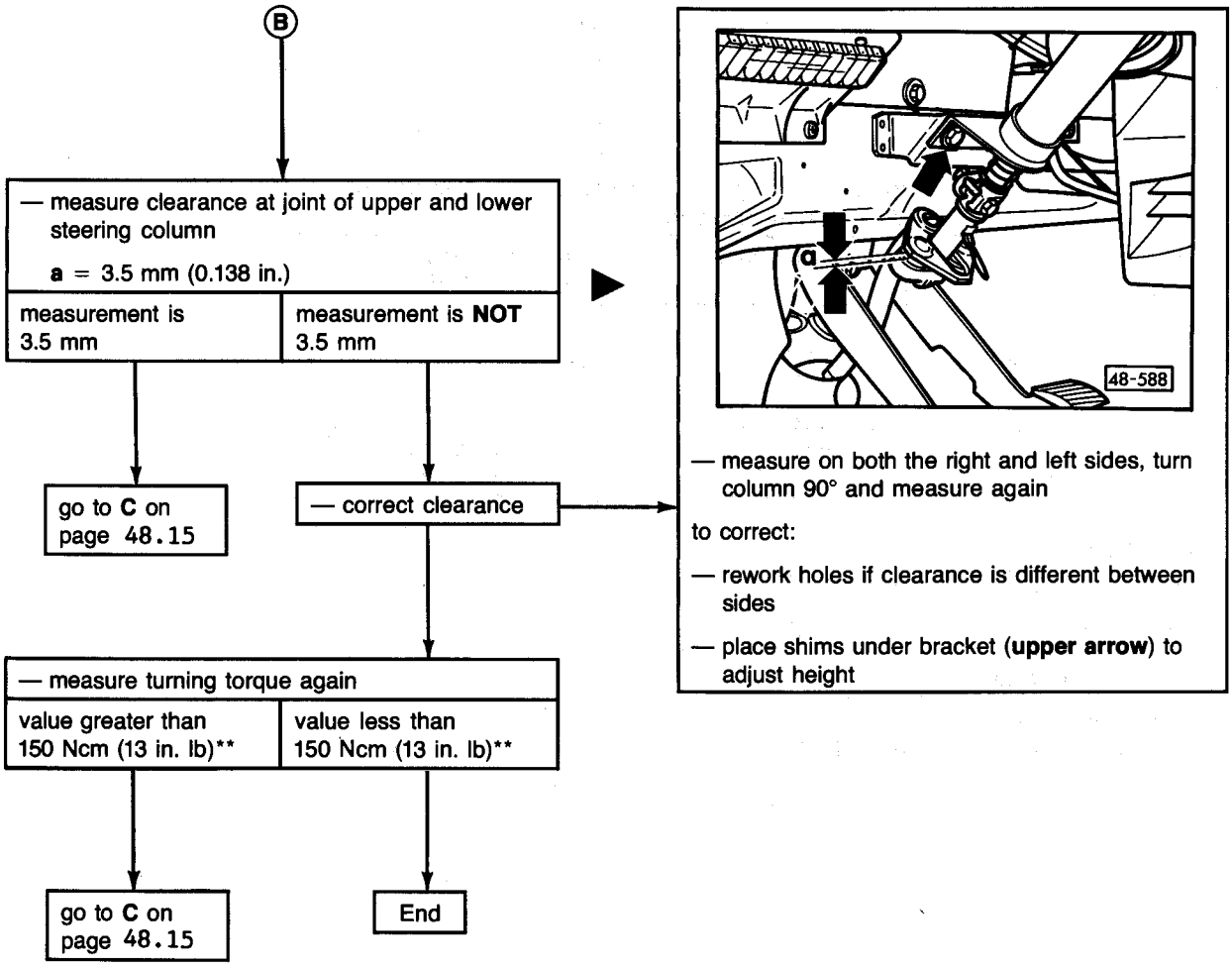

**see page 48.13

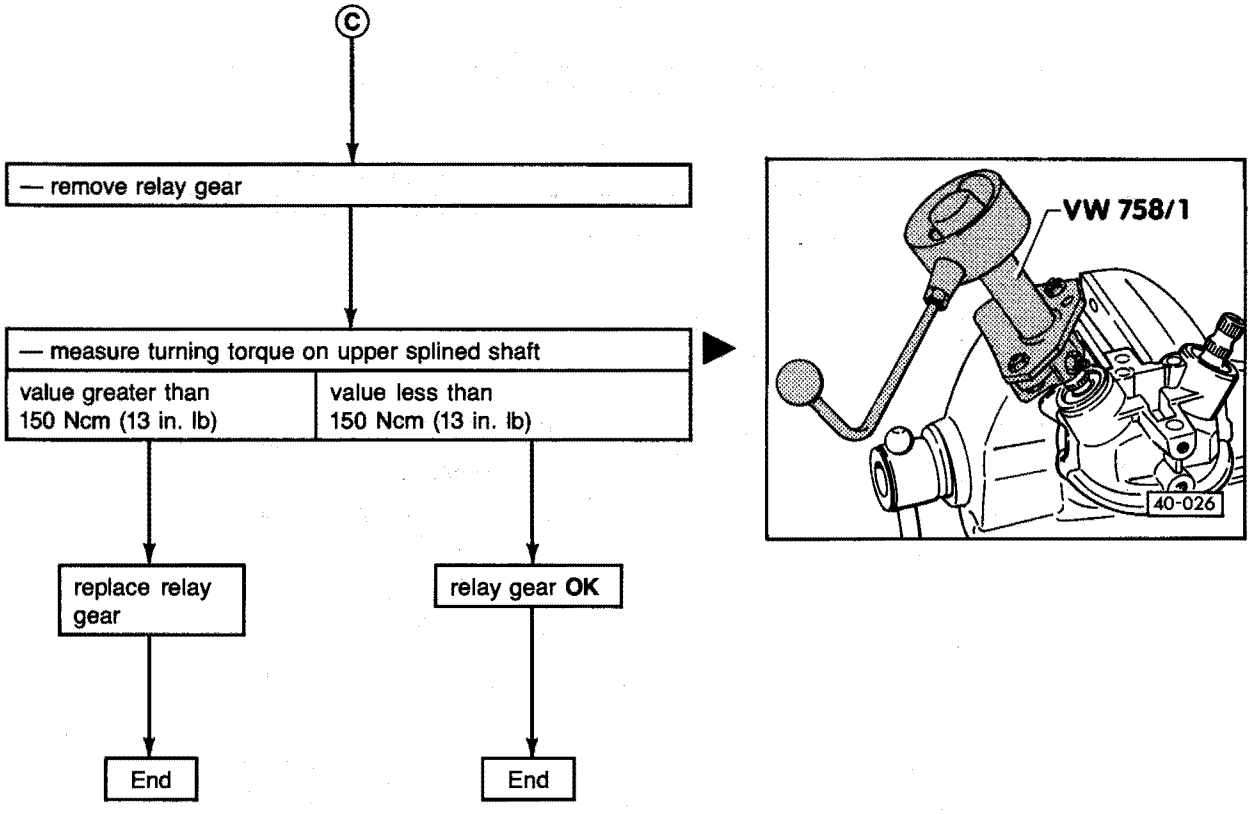
Ⓒ
— remove relay gear
— measure turning torque on upper splined shaft
value greater than 150 Ncm (13 in. lb)
value less than 150 Ncm (13 in. lb)
replace relay gear
relay gear OK
End
End
VW 758/1
40-026

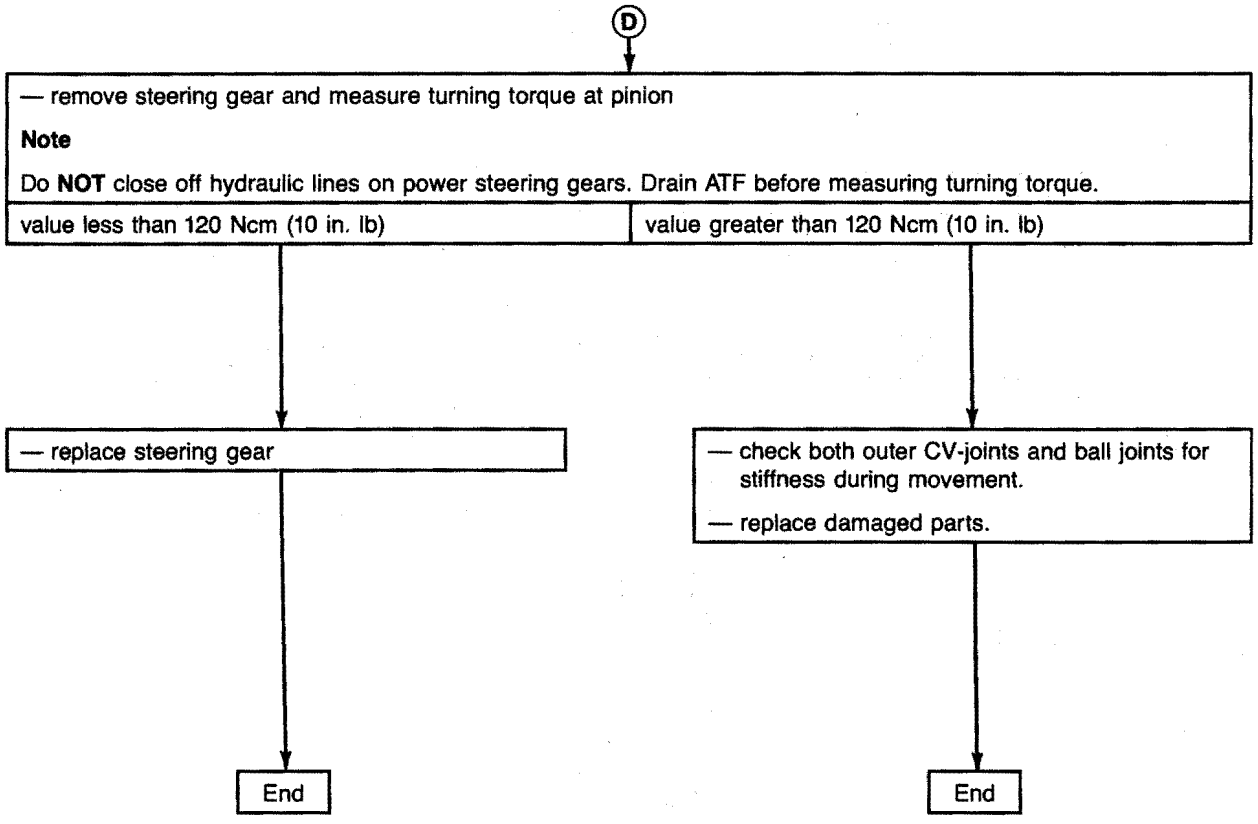
D
— remove steering gear and measure turning torque at pinion
Note
Do NOT close off hydraulic lines on power steering gears. Drain ATF before measuring turning torque.
value less than 120 Ncm (10 in. lb)
value greater than 120 Ncm (10 in. lb)
— replace steering gear
— check both outer CV-joints and ball joints for stiffness during movement.
— replace damaged parts.
End
End

Troubleshooting

Condition/fault	Possible cause	Remedy
Fluid level in ATF reservoir low	Air trapped in steering system has escaped during normal operation	Fill reservoir to "MAX" mark
	Valve housing seal leaking, ATF leaks out at steering gear pinion	Replace seal and O-rings
	Leaks at connections on steering gear, hoses, pump or reservoir	Check system for leaks and repair
Fluid level in ATF reservoir low again after refilling — no external leaks evident	Additional air trapped in steering system has escaped during normal operation	Fill reservoir to "MAX" mark
	Steering rack seal defective (leaking fluid is found inside steering gear boot)	Replace seal (install complete repair kit)
Steering effort becomes greater as wheel is turned	Pressure/flow limiting valve in pump housing is sticking	Clean or replace pressure/flow limiting valve in pump housing
	Dirt/foreign matter in valve control slot	Clean valve unit
	Insufficient pump pressure	Check pump pressure and replace pump if necessary
Noises in power steering system	ATF level in reservoir too low	Fill reservoir to "MAX" mark
	Insufficient pump drive belt tension	Tighten or replace belt
	Reservoir filter dirty	Replace filter
	Loose connection at pump drawing air into system (ATF foaming in reservoir)	Tighten pump connections

Index

— Acid rain
removing spots 50.6
— Adhesives
materials 50.5
— Body dimensions
door 50.4
floor 50.2
windshield 50.4
— Painting
pop-up roof/luggage carrier 50.5
— Plastics
identifying 50.5
repairing 50.5

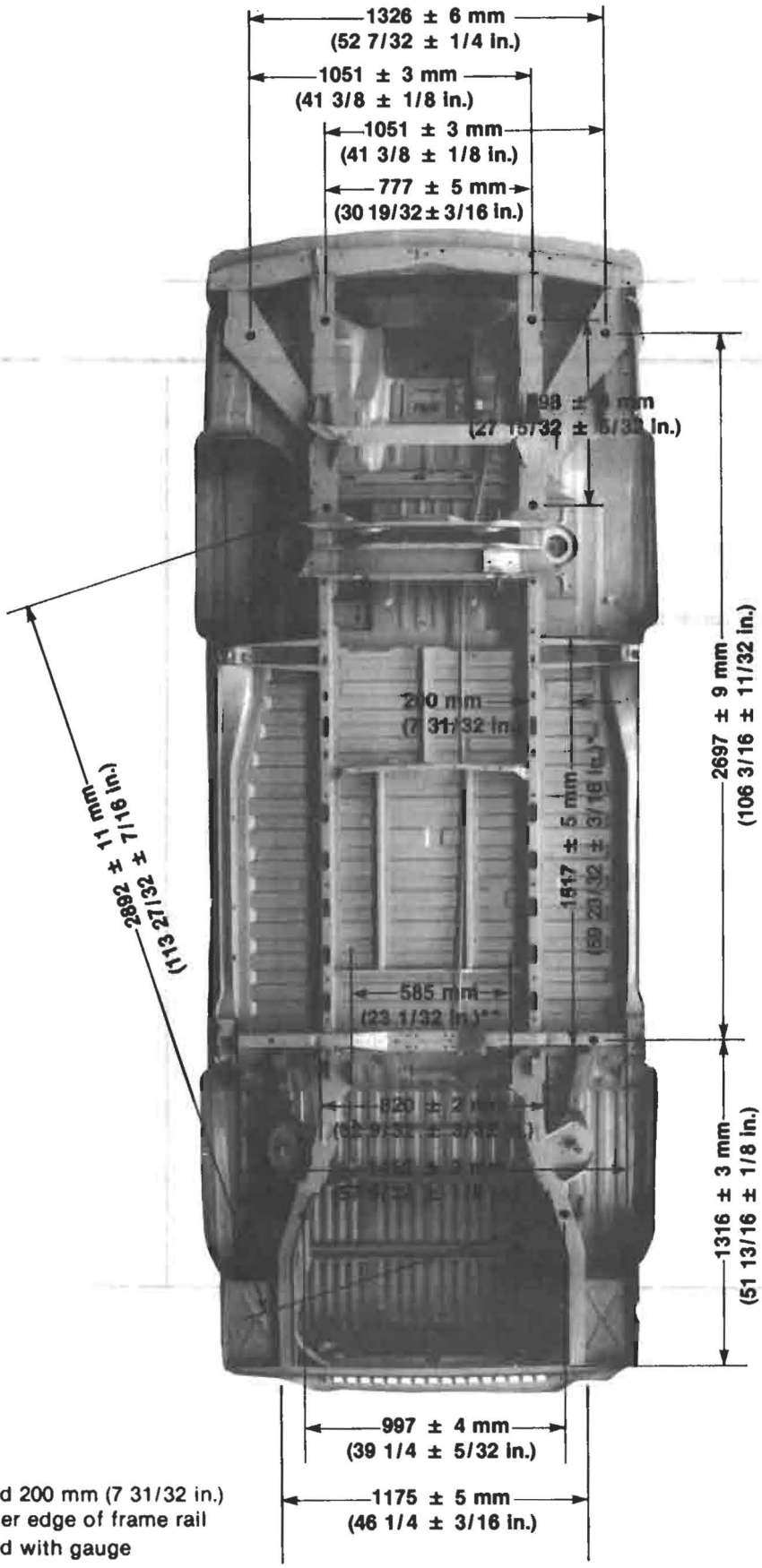

*measured 200 mm (7 31/32 in.) from outer edge of frame rail

**measured with gauge

00-913

50.2 Floor section dimensions

Please note the following floor dimension measurements for Vanagon Syncro.
All other dimension measurements remain valid.

Note

Measurement Key

A = 750 ± 2mm (29 1/2 ± 3/32 in.)
B = 704 ± 1mm (27 3/4 ± 1/16 in.)
C = 683 ± 1mm (26 7/8 ± 1/16 in.)
D = 225 ± 1mm (8 7/8 ± 1/16 in.)
E = 253mm (9.96 in.)
F = 289 ± 1mm (11 3/8 ± 1/16 in.)

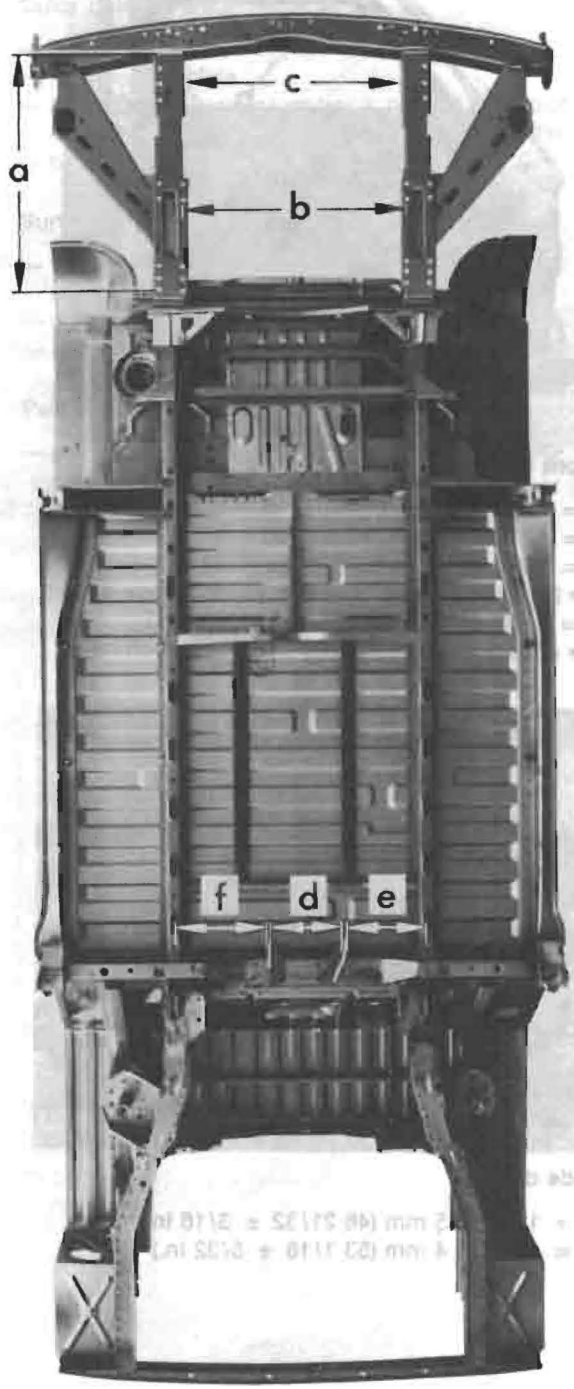

00-2221



Front door

a = 1157 ± 3 mm (45 9/16 ± 1/8 in.)
b = 1270 ± 4 mm (50 ± 5/32 in.)
c = 1564 ± 1 mm (61 9/16 ± 1/32 in.)
• largest distance between welded body seams
d = 1566 ± 1 mm (61 21/32 ± 1/32 in.)
• distance between door contact switch holes

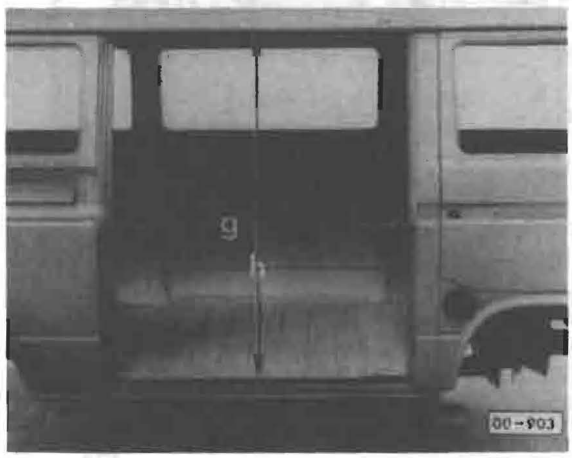

Side door

g = 1185 ± 5 mm (46 21/32 ± 3/16 in.)
h = 1348 ± 4 mm (53 1/16 ± 5/32 in.)



Rear door

j = 1050 ± 2 mm (41 11/32 ± 3/32 in.)
i = 1618 ± 5 mm (63 11/16 ± 3/16 in.)
a = 340 mm (13 3/8 in.)

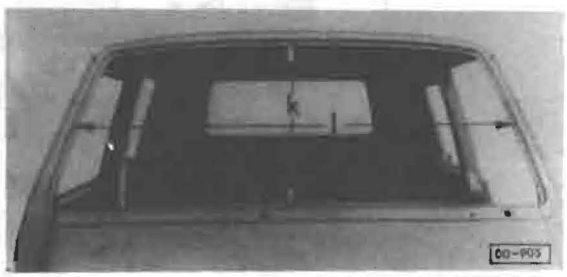

Windshield

k = 723 ± 4 mm (28 15/32 ± 5/32 in.)
l = 1469 ± 5 mm (57 27/32 ± 3/16 in.)

Identifying/painting and repairing plastic parts

Refer to the Volkswagen of America Refinishing Guide, Lit. No. **W42-701-008-1.**

Body assembly materials

Refer to the Volkswagen of America Refinishing Guide, Lit. No. **W42-701-008-1.**

> **CAUTION**
>
> Part numbers are for reference only. Always check with your Parts Department for latest parts information.

Pop-up roof/luggage carrier, painting

Color determination

— locate pop-up roof/luggage color on vehicle identification plate
— if pop-up roof/luggage carrier is painted in a color other than the body, consult a color chart for the correct color code

Surface preparation

— thoroughly clean and dry pop-up roof/luggage carrier
— roughen surface with steel wool
— reclean and thoroughly leave dust free

Painting

— paint surface with synthetic resin, acrylic, or two-component paint in selected color
  • adhesive promoter is not necessary

Acid rain spots on paint, removing

Note
Applies to all vehicles without acrylic transport protection

Acid rain spots are most visible under fluorescent light and look like water spots.

In most cases, you can remove these spots by performing the following procedures and thus avoid re-painting.

Do **NOT** confuse the effects of acid rain damage with industrial fallout. Industrial fallout consists of small airborne metallic particles that settle onto the paint and eventually eat their way into the finish. Rubbing your hand across the clean surface will reveal a gritty texture.

If acid rain spot removal is new to you, we recommend that you contact a good body shop or reconditioning center.

> **WARNING**
> Before using any chemicals or cleaning compounds, carefully read all of the cautions and medical information on the container. Always follow all of the manufacturer's recommendations.

Most makers of professional automotive reconditioning products recommend the following six steps **IN SEQUENCE** to repair acid rain paint spots:

Step 1: Inspection

- wash vehicle with mild soap and water, then dry completely

> **CAUTION**
> Do **NOT** wash or dry vehicle in direct sunlight. Ordinary water spots could form and confuse the inspection.

- inspect the following surfaces under a fluorescent light
  - hood, roof, rear deck, tops of fenders, painted surfaces of bumpers and doors from the belt line up

Step 2: Neutralization

The continuing effect of the acid must be stopped by neutralizing.

- mix a solution of baking soda and water (4 tablespoons per gallon) and stir until completely dissolved
- apply solution to all affected areas and let stand for a few minutes before rinsing off with clear water

Commercial neutralizing products such as "Blue Max" by Car Brite® or equivalent work well.

Step 3: Buffing

You can buff by hand or with a low speed orbital buffer or with a high speed buffer.

> **CAUTION**
>
> It is extremely important that power buffing be done by an experienced person. If done incorrectly, power buffing can quickly and easily damage the paint finish.
>
> Use clean buffing pads at **ALL** times.

- mask off any trim or glass close to affected areas
- buff small areas at a time, no larger than two feet by two feet
- buff using a light polishing compound such as "Finesse-It" by 3MR, "Acid Rain Creme" by Car Brite®, or equivalent. Follow the manufacturers instructions to achieve the best possible results.

CAUTION

Do **NOT** use general purpose rubbing or buffing compounds. They are too coarse for this application and could damage the finish.

- buff surface until acid spots are removed

Note

Inspect the work surface frequently during buffing to ensure that only a minimum of original finish is removed. If the color of the vehicle shows up on the buffing pad, you have cut through the clearcoat and you have to repaint the affected area.

Step 4: Cleaning

- wash vehicle thoroughly with a solution of mild soap and water
- rinse vehicle with clear water then dry completely
- inspect vehicle to see if another application is necessary

Step 5: Polishing

Polish the finish to restore the original luster either by hand or with a power buffer. Always follow polishing with an application of wax.

CAUTION

It is extremely important that power buffing be performed by an experienced person. If done incorrectly, power buffing can quickly and easily damage the paint and finish.

Use clean buffing pads at **ALL** times.

- buff with polishes such as "Liquid Polish" by 3MR, "Crystal Shine" by Car Brite®, or equivalent. Follow the manufacturers instructions to get the best possible results.

Step 6: Waxing

Waxing (unlike polishing) will seal the finish and prevent acid rain from leaving spots.

- **HAND WAX** using clean cheesecloth and a good quality non-abrasive wax.

If, in extreme cases, you can still see acid rain spots after the previous six steps, or if the clearcoat has been rubbed through, it will be necessary to re-paint the affected areas.

Acid Rain Spot Removal Flowchart
(See detailed instructions on previous pages)

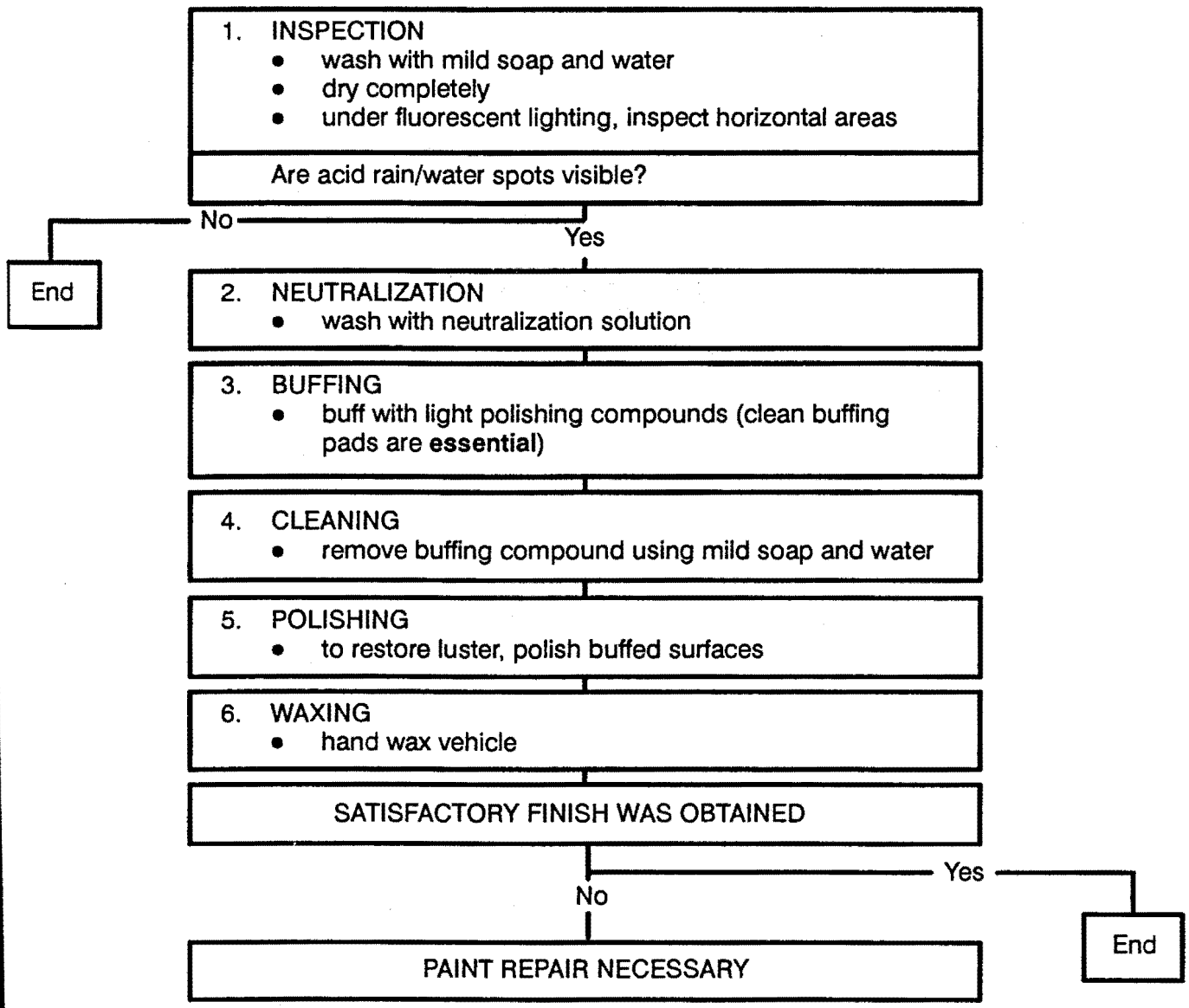

Index

— Rear door/lock cylinder 55.2
— Rear lid spring 55.4
— Rubber door stop 55.3
— Striker plate 55.3

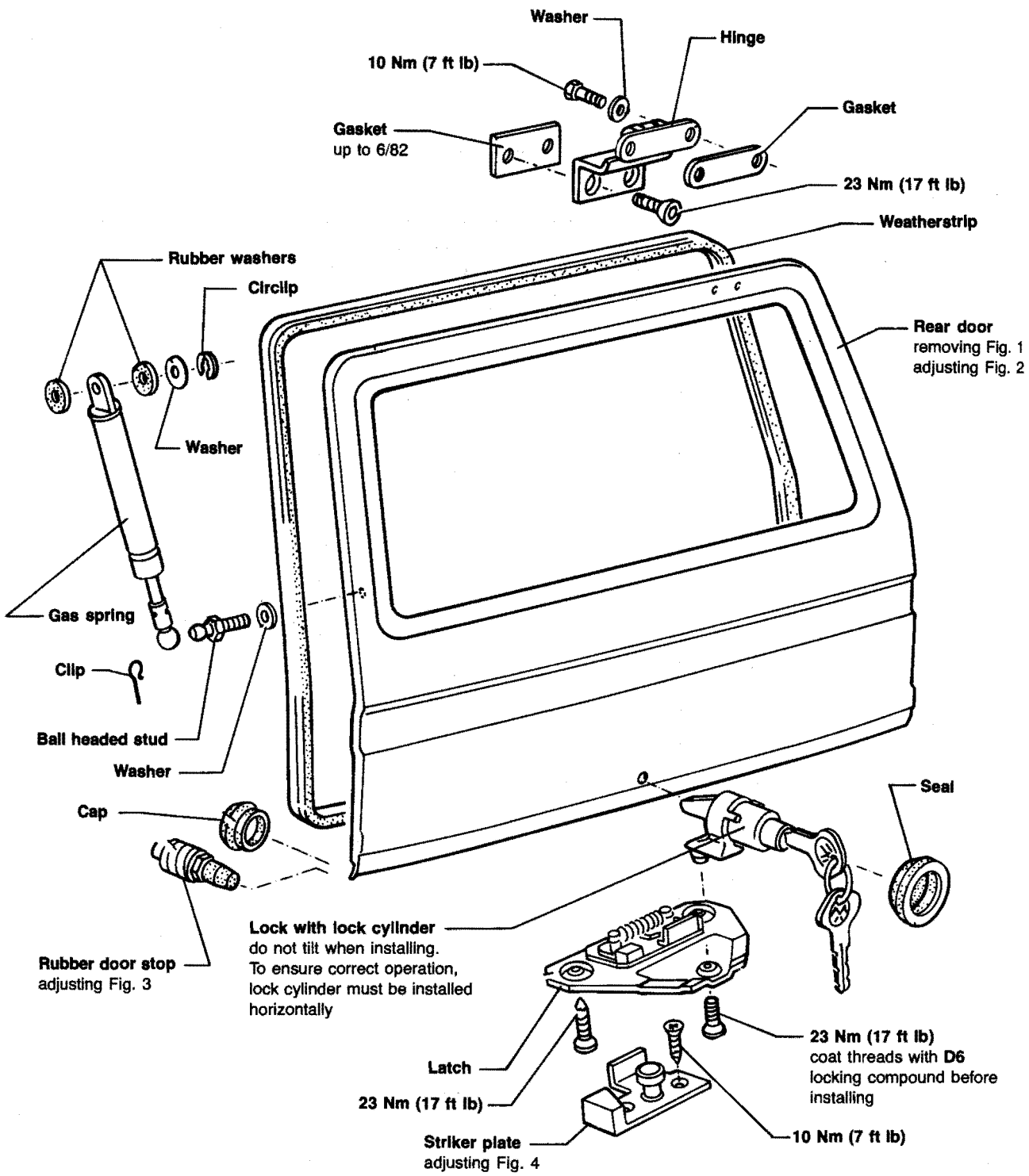
Washer
Hinge
10 Nm (7 ft lb)
Gasket
Gasket
up to 6/82
23 Nm (17 ft lb)
Weatherstrip
Rubber washers
Circlip
Rear door
removing Fig. 1
adjusting Fig. 2
Washer
Gas spring
Clip
Ball headed stud
Washer
Cap
Seal
Lock with lock cylinder
do not tilt when installing.
To ensure correct operation,
lock cylinder must be installed
horizontally
Rubber door stop
adjusting Fig. 3
23 Nm (17 ft lb)
coat threads with D6
locking compound before
installing
Latch
23 Nm (17 ft lb)
Striker plate
adjusting Fig. 4
10 Nm (7 ft lb)

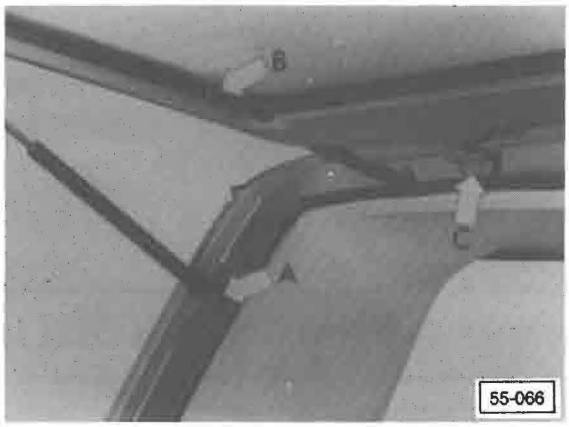

Fig. 1 Rear door, removing

— pry off circlip (**arrow A**) and pull off gas spring from ball headed stud
— disconnect rear window defogger wire connection (**arrow B**), connection for heated side mirror, remove ground cable and pull wiring harness out of rear door
— remove socket head screws (**arrow C**) and take off rear door

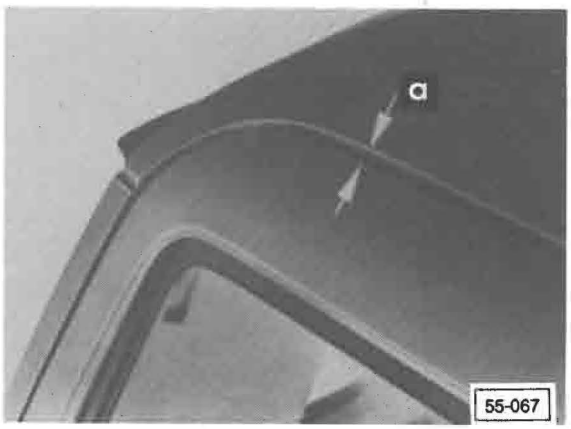

Fig. 2 Rear door, adjusting

— loosen hinge socket head screws and move door up or down as necessary
• **a** = 12 ± 1.0 mm (15/32 ± 3/64 in.)
— move door to left or right to obtain even gap at rear door sides

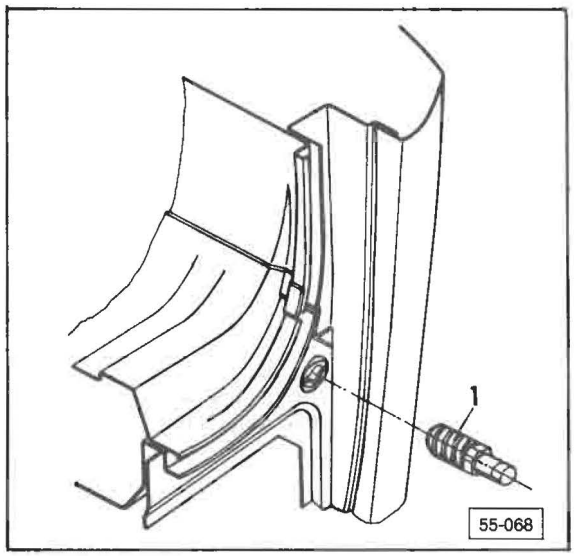

Fig. 3 Rubber door stop, adjusting

— adjust rubber stop **1**, by screwing in or out until rear door is flush with outer panel

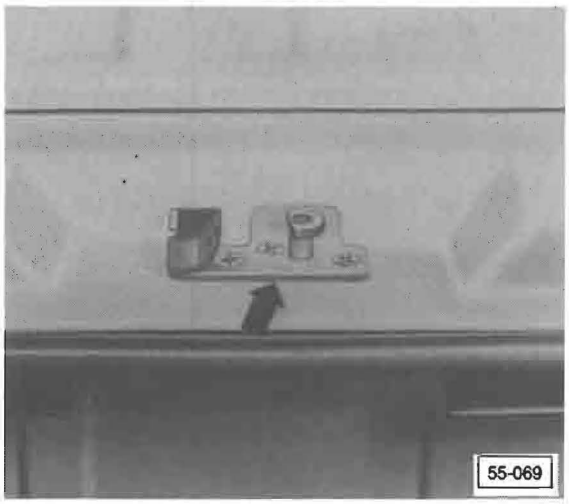

Fig. 4 Striker plate, adjusting

— loosely attach striker plate (**arrow**)
— close rear door
— open rear door and tighten screws
• 10 Nm (7 ft lb)

Rear lid variable gas spring

For complaints that rear-lid gas spring causes rear hatch to open completely, such that lid is too high for some people to reach to close, correct as follows:

— install new-type variable gas cylnders, Part No. 251829331B/332 (in pairs only). These cylinders allow the rear hatch to stay open in various positions

Note

New-type gas cylinders are installed in current production vehicles (starting May, 1982; VIN No. 25 CH 126332)

CAUTION

Part numbers are for reference only. Always check with your Parts Department for latest parts information

Index

— Front doors
adjusting 57.5
assembly 57.2
glass 57.4
guide channel 57.5
handles 57.3
lock/lock-rod 57.3
power door locks 57.6
whistling noises, eliminating 57.10
window regulator 57.4
— Lost/broken keys
code location 57.8

Note

When disassembling door, remove in numerical order; install in reverse order.

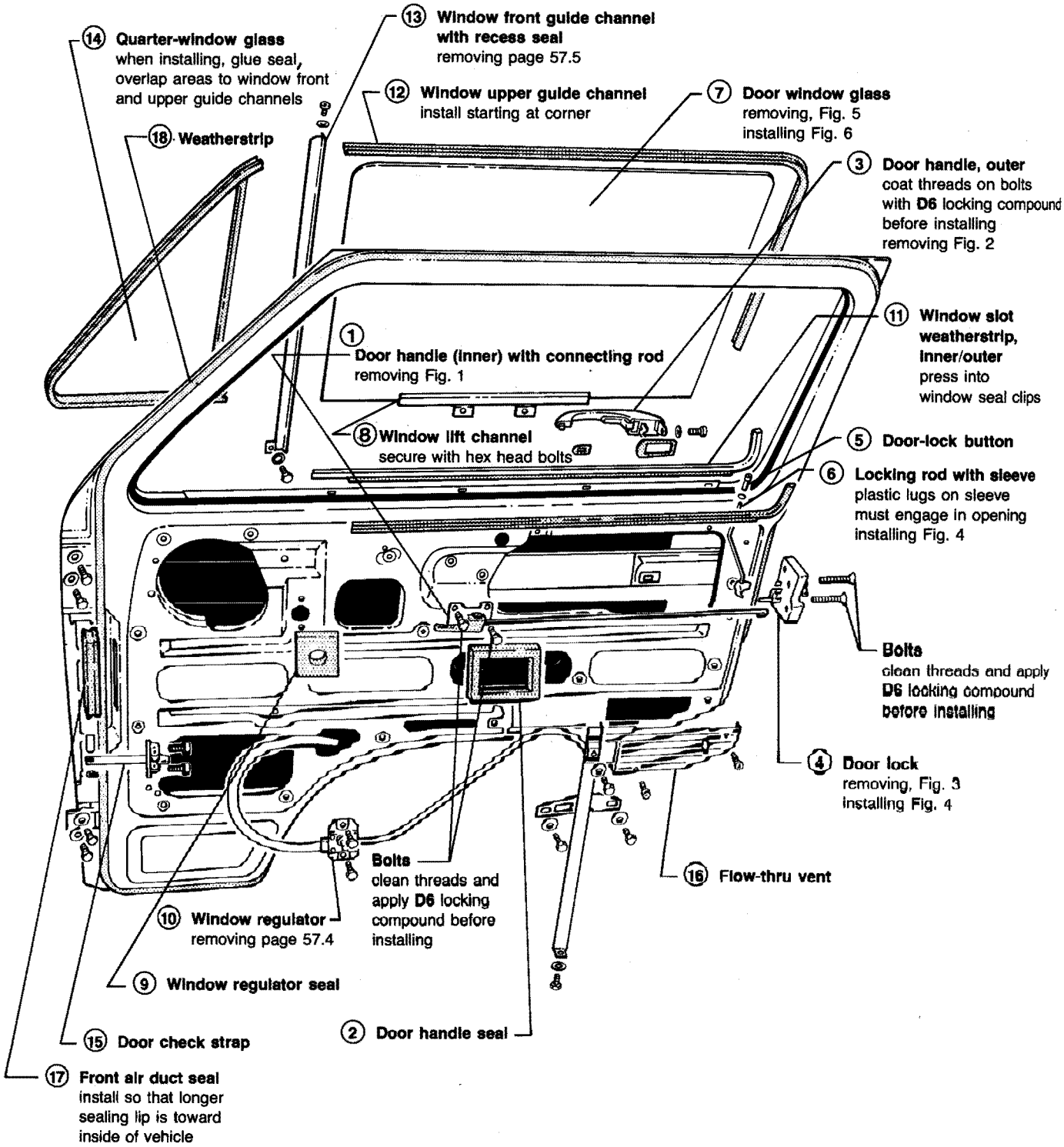

57-124

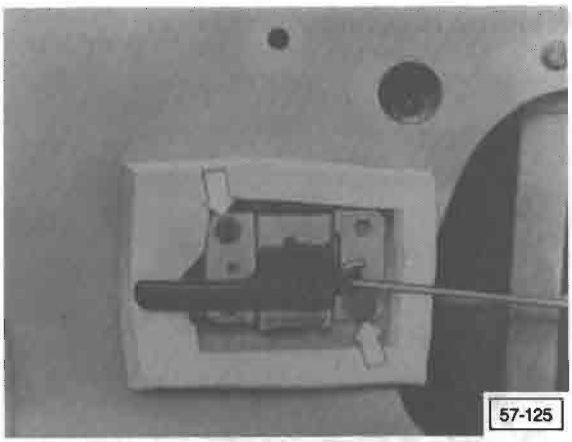

Fig. 1 Door handle (inner) with connecting rod, removing

— remove bolts (**arrows**)
— detach connecting rod and remove door handle

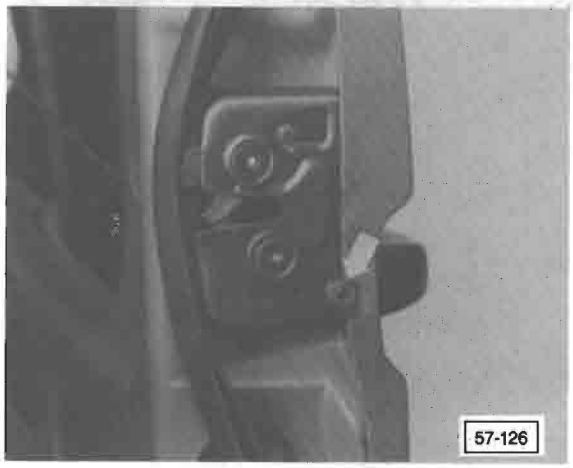

Fig. 2 Door handle (outer), removing

— remove door weatherstrip and remove screw (**arrow**)
— push door handle to front of vehicle and remove

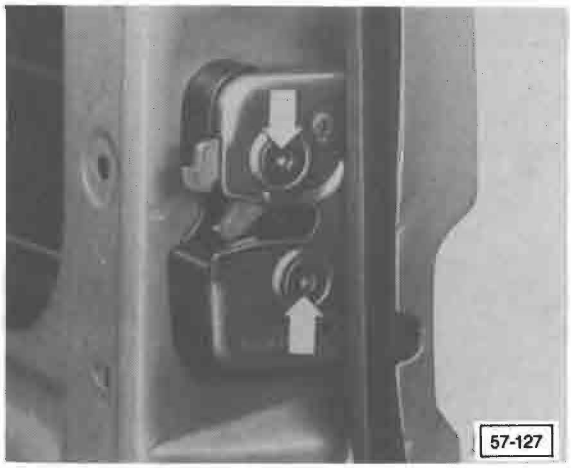

Fig. 3 Door lock, removing

— remove two socket head screws (**arrows**)
— pull door lock out of locking rod sleeve and remove lock complete with connecting rod

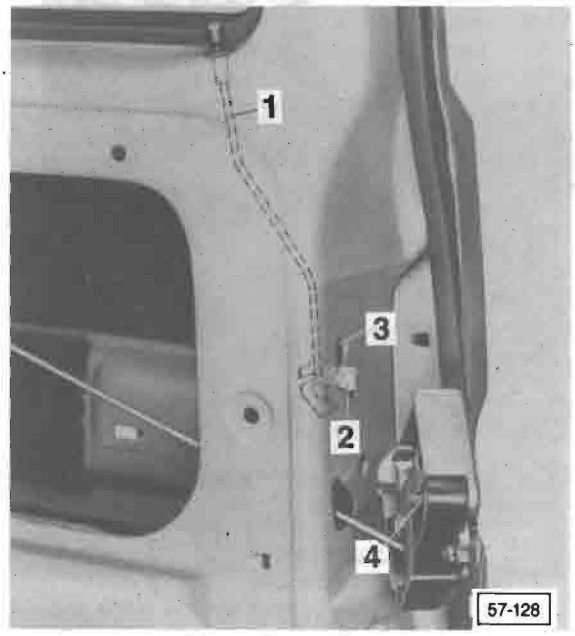

Fig. 4 Door lock/locking rod, installing

— set locking rod **1** in installed position
— push locking sleeve **2** through door opening **3** so that plastic lugs prevent it from springing back
— push sleeve **2** onto locking lever and at same time install door lock

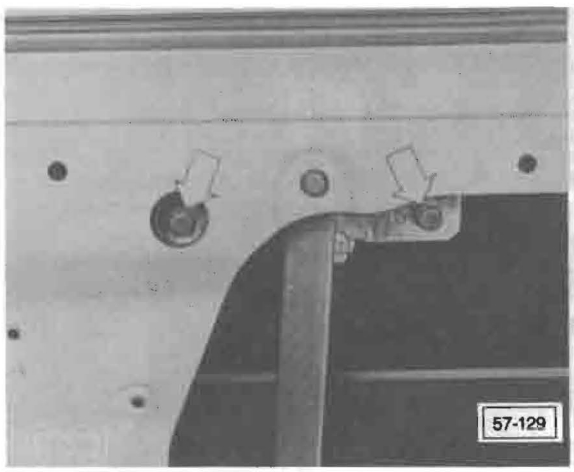

Fig. 5 Door window glass, removing

— wind window down slightly
— remove two bolts (**arrows**) from window regulator
— push door window up fully and remove

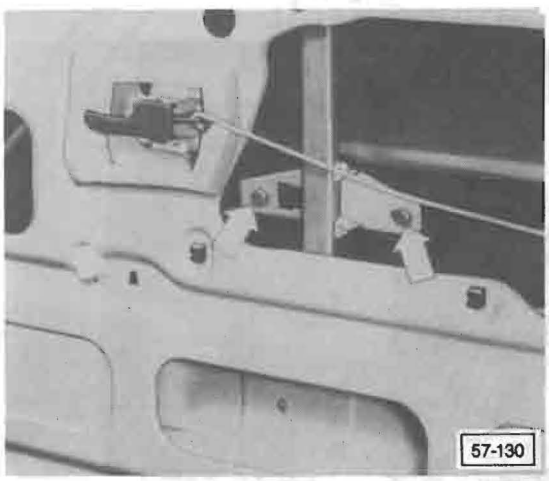

Fig. 6 Door window glass, installing

— loosely attach window glass to window regulator (**arrows**)
— wind up window fully
— align window in front window guide and upper window guide channel
— wind window down slightly
— tighten bolts through hole in inner door frame

Window regulator, removing

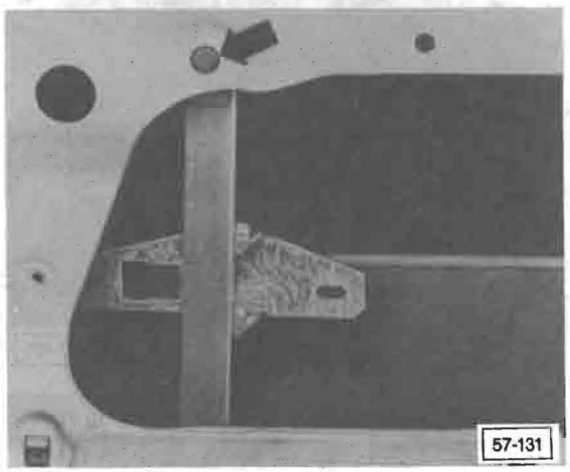

— remove bolt (**arrow**)

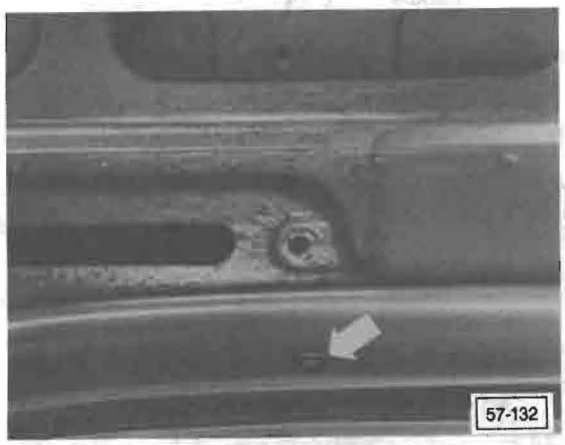

— remove bolt (**arrow**) from underneath door

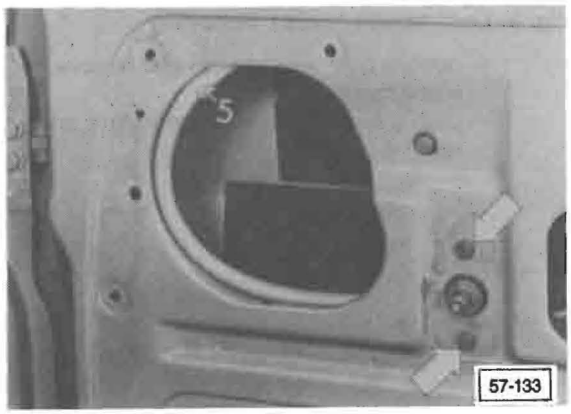

— remove window regulator seal
— remove bolts (**arrows**)
— bend back metal lug **5** and remove window regulator

Window front guide channel, removing

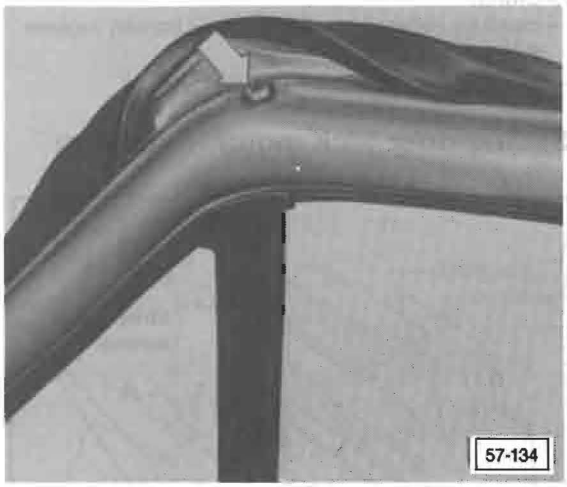

— pull off weatherstrip and remove screw (**arrow**)

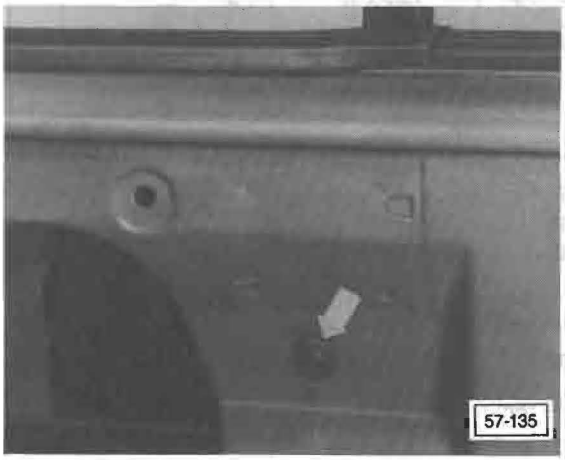

— remove bolt (**arrow**)
— pull guide channel down and remove

Window front guide channel, installing

Reinstall all components in reverse order of removal.

Front doors, adjusting

Note

Front door is correctly adjusted when there is an even gap all around door when shut. Door and body belt-line must align and door must be flush with body.

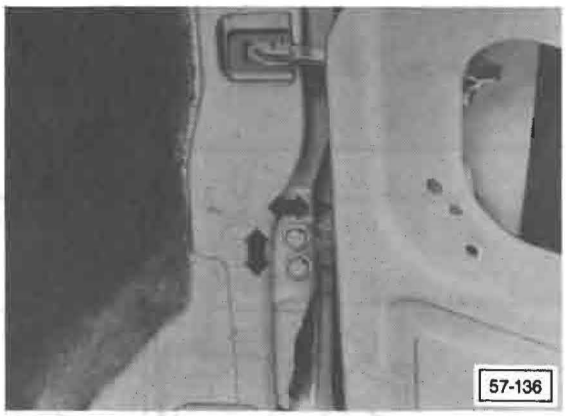

— if door does not line up with outer panel, or an even gap does not exist all around, loosen hinge bolts (**arrows**) and move door as required

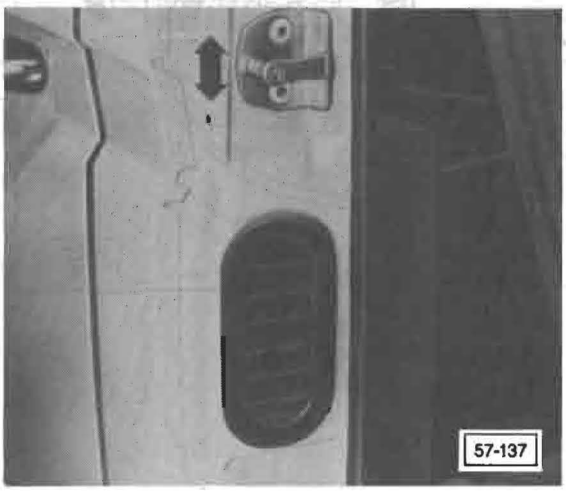

— adjust door at rear by moving striker plate (**arrows**)

Starting March 1986, power door locks are available for Vanagon vehicles.

Power door lock motors, removing

— disconnect battery ground strap
— remove door trim panel
— carefully pull off plastic moisture barrier as necessary
— pull off electrical connection for power window switch
— pull off electrical connection from power door lock motor

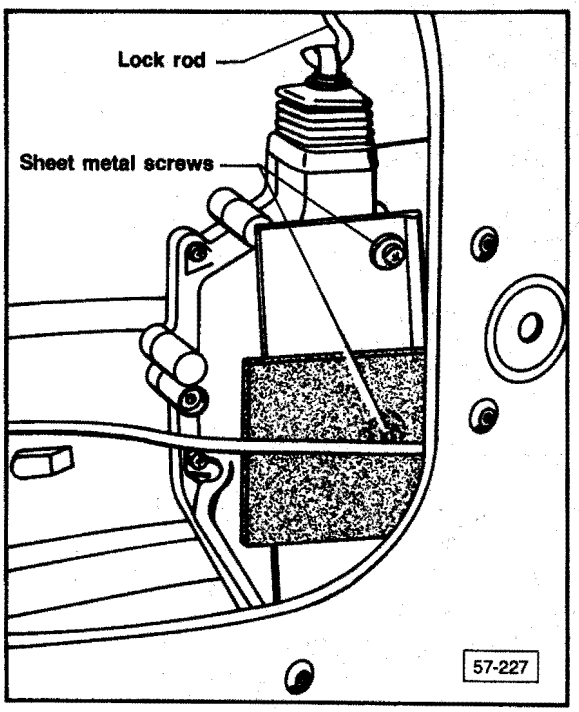

— remove sheet metal screws
— remove power door lock motor

Power door lock motors, installing

Installation is in reverse order of removal noting the following:
— carefully reinstall plastic moisture barrier, replace if damaged
— check locks for proper functioning

Sliding door lock motor, removing

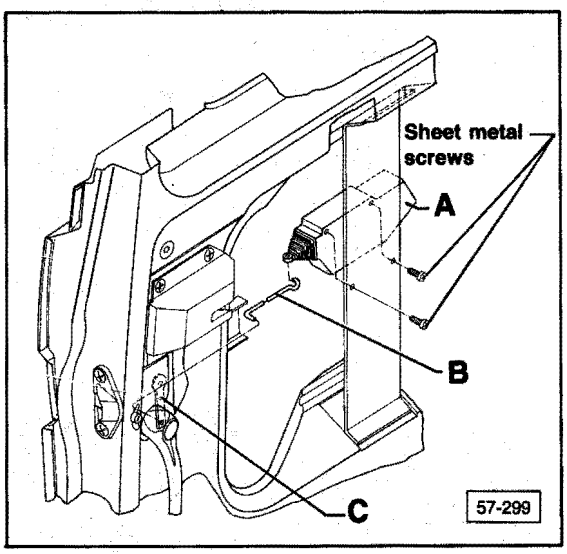

A — power door lock motor
B — lock rod
C — remove control lock

— disconnect battery ground strap
— remove door trim panel
— pull off electrical connection from power lock motor
— remove two sheet metal screws
— take out power door lock motor

Sliding door lock motor installing

Installation is in reverse order of removal noting the following:
- check lock for proper functioning

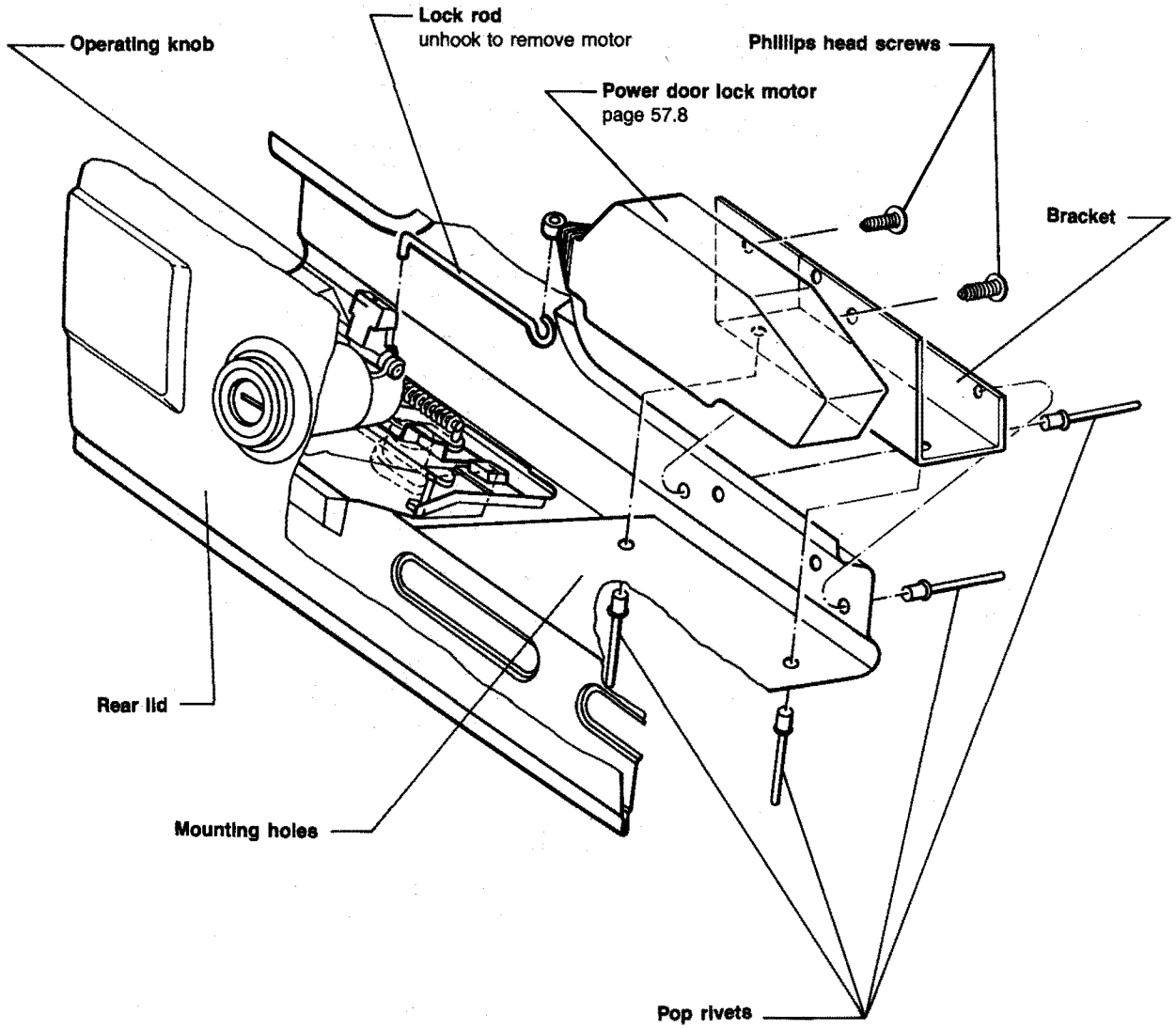
Operating knob
Lock rod
unhook to remove motor
Phillips head screws
Power door lock motor
page 57.8
Bracket
Rear lid
Mounting holes
Pop rivets

57-230

Rear lid door lock motor, removing

— disconnect battery ground strap
— remove rear lid trim panel
— pull off electrical connection from power door lock motor

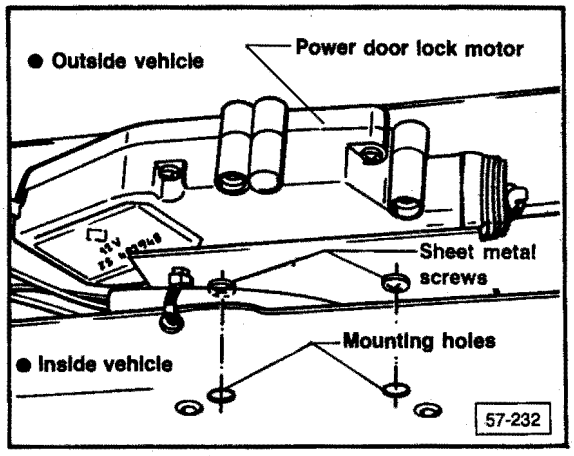

— remove sheet metal screws

Note

Sheet metal screws are recessed into rear lid frame.

— remove power door lock motor

Rear lid door lock motor, installing

Installation is in reverse order, noting the following:
- check door lock for proper function

Power door lock motor/bracket installation, spare parts only

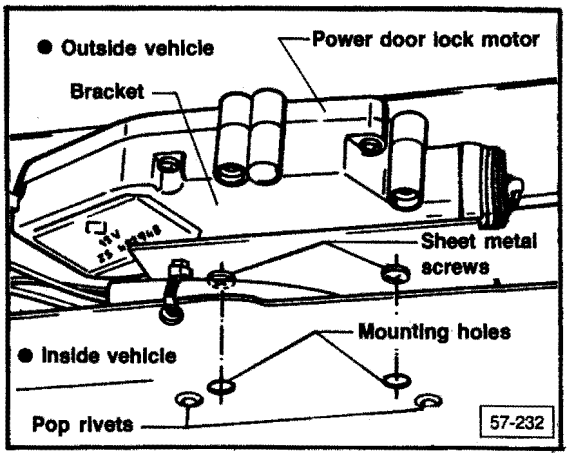

Replacement rear lids are provided with holes pre-punched for pop rivets in the inner sheet metal.

Additionally, both mounting holes for fastening power door lock motor to bracket are provided.

Installing

— position bracket and fasten with pop rivets

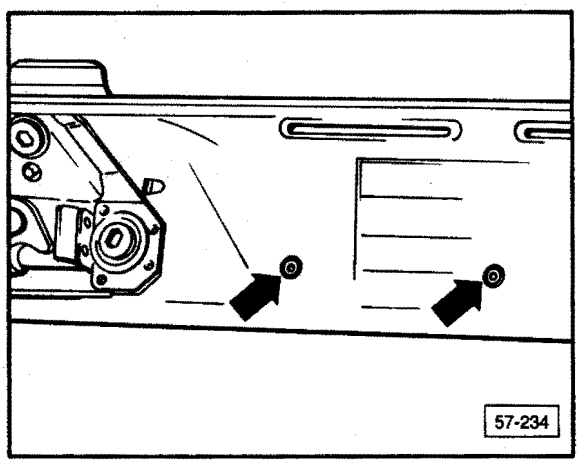

— from inside of lid drill two 4 mm (5/32 in.) holes for lower pop rivets

Note

Drill bit must extend at least 65 mm (2.5 in.) out of chuck.

— remove any burrs from holes and touch up with paint and corrosion protection
— install rivets (**arrows**) from outside with a riveting tool

Lost/broken keys, key code

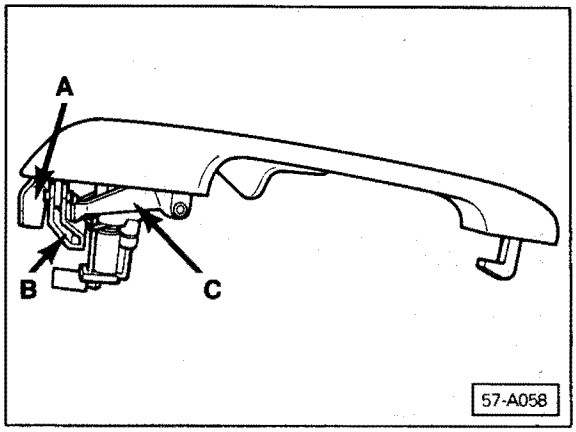

In the event of a lost or broken key, the key code can be obtained from three possible locations on the outside door handle (after removal).
A — Release lever.
B — Front hold-down hook.
C — Transfer lever

Whistling noises, eliminating

Since the routing of ventilation from driver's door to rear side windows, whistling noises have occurred at approximately 70km (42 mph), or when vehicle is parked and fresh air blower is running at 2nd or 3rd speed.
Test drive vehicle to determine location.

Whistling noises from center of instrument panel, eliminating

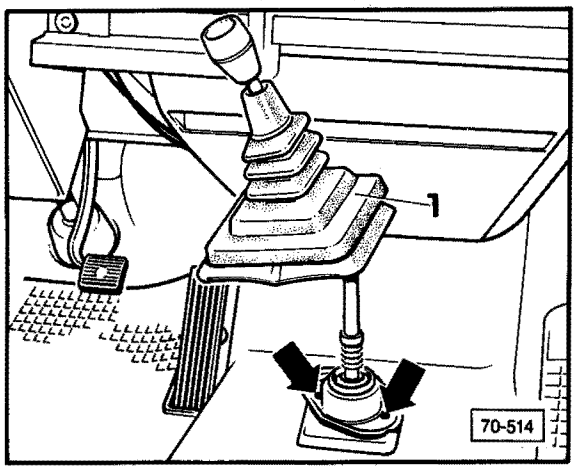

Note

Procedure applies only to vehicles with:
- gearshift lever bracket Part No. **251 711 231A**
- without raised center instrument panel
- up to **VIN 25JH087797**

— pull up boot **1**
— seal assembly holes (**arrows**) with 5.0mm (13/64 in.) dia. bead of adhesive strip **AKD 476 KD5 05** or equivalent

Whistling noises at driver's/passenger front door, eliminating

— check and adjust driver's/passenger front door as required

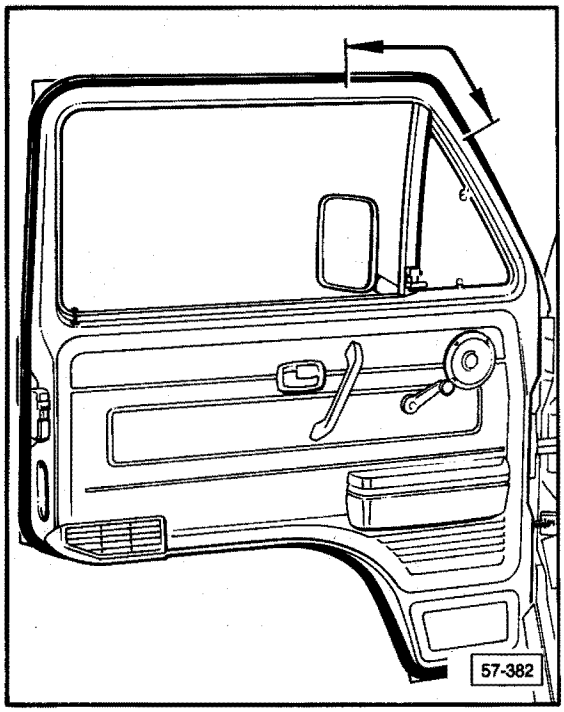

— check fit of door seal at area over window guide (**arrow**)
- seal with adhesive **D 002 100** or equivalent

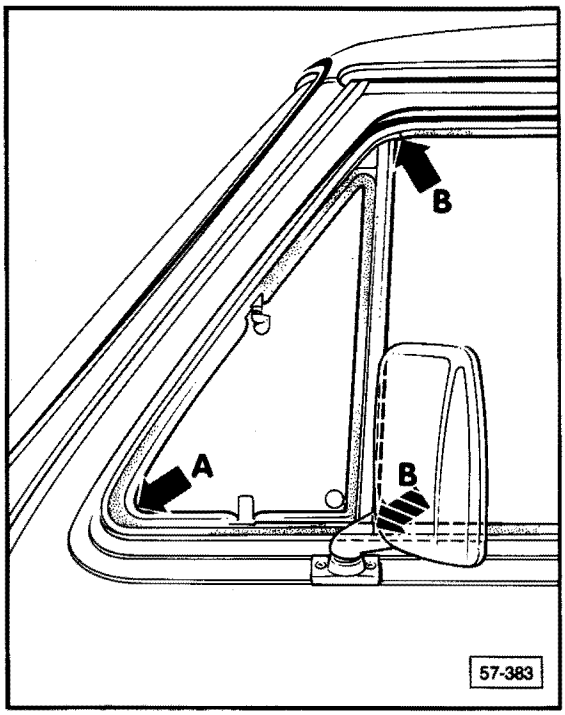

— check for secure fit at quarter window (**arrow A**) replace if necessary

— check bonding at overlap area of seal (window guide and channel seal) (**arrow B**)
- reseal with adhesive **D 002 100** or equivalent

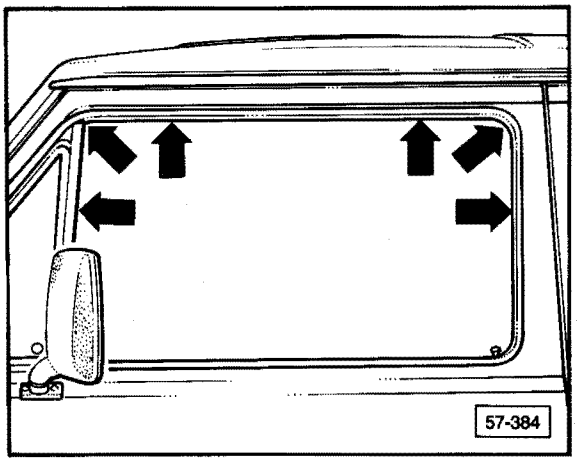

— check fit of door glass in guide when closed
- adjust as required

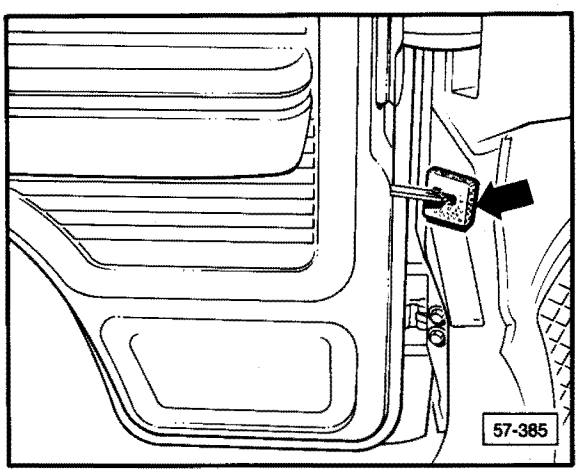

— check bracket seal (**arrow**)
- replace if defective

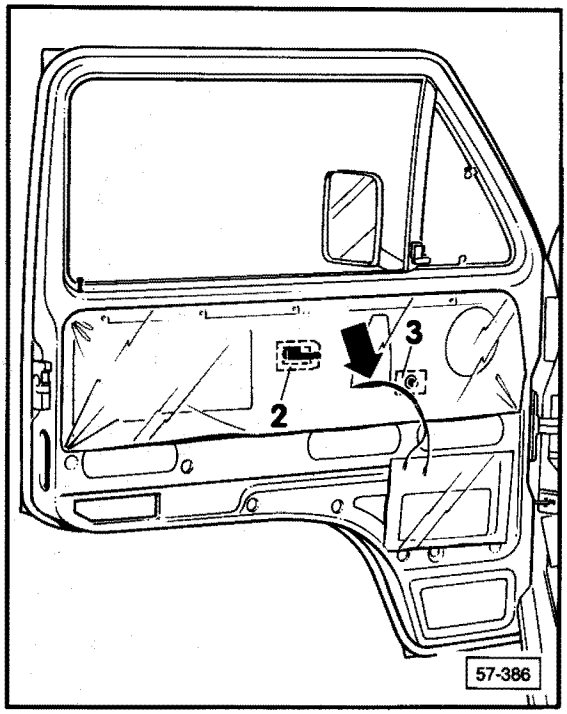

— check plastic moisture barrier for damage
- replace or resecure as necessary

— seal opening for cables for door speakers, power windows or mirrors, if equipped (**arrow**)
— check correct fit of foam for window crank **3**, inside door opening mechanism **2**

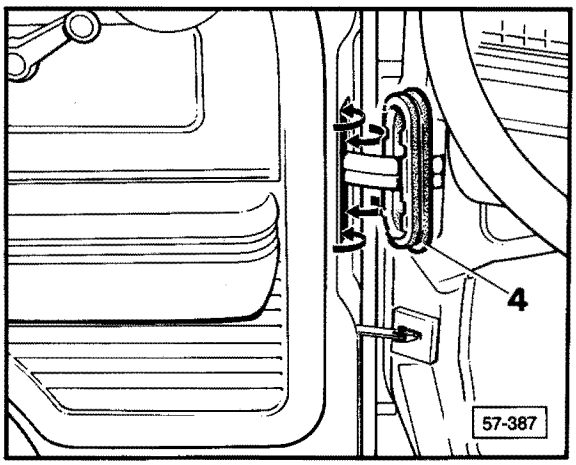

— pry out seal for front air channel seal **4**
— seal gaps with sealant **AKD 476 KD5 05** or equivalent at inlet area of door air channel
— reinstall seal for from air channel **4**

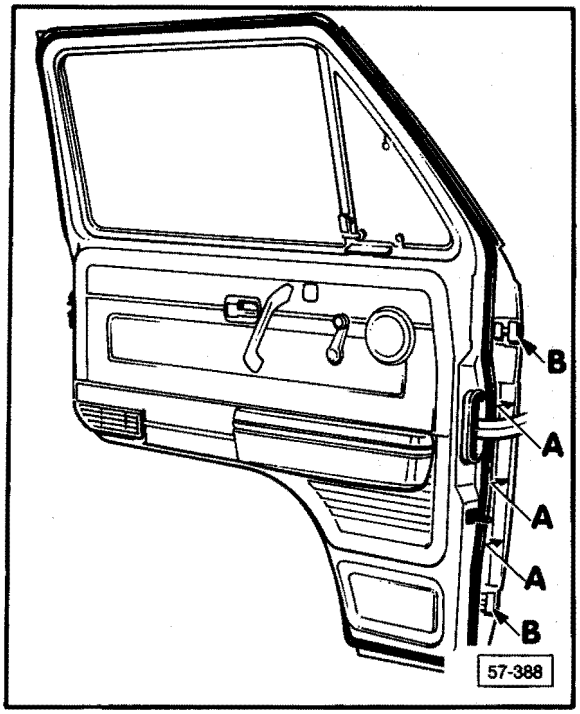

— remove door
— seal cowl weld flange (**arrow A**), door hinges (**arrow B**)
— test drive or operate fresh air blower and check for whistling noises

Body Rear Doors

Quick Data

Index

Center hinge

- Adjusting 58.9
- Assembly 58.8
- Removing/installing 58.9

Sliding door, 1980–1984 m.y.

- Bowden cables adjusting 58.7
- Door cover 58.3
- Door handle inner/outer 58.3
- Door lock buffer 58.3
- Lock, front 58.2
- Lock, rear 58.6
- Lock plate, remote control 58.6
- Lubricating 58.7
- Removing/installing 58.4
- Striker plate, adjusting 58.5

Sliding door, from 1985 m.y.

- Assembly 58.10
- Central lock 58.20
- Door cover 58.11
- Handle 58.22
- Hinge link, adjusting 58.16
- Hinge link, assembly 58.21
- Modifications 58.11
- Remote control lock 58.18
- Removing/installing 58.12
- Roller guides adjusting 58.14
- Striker pin, adjusting 58.15

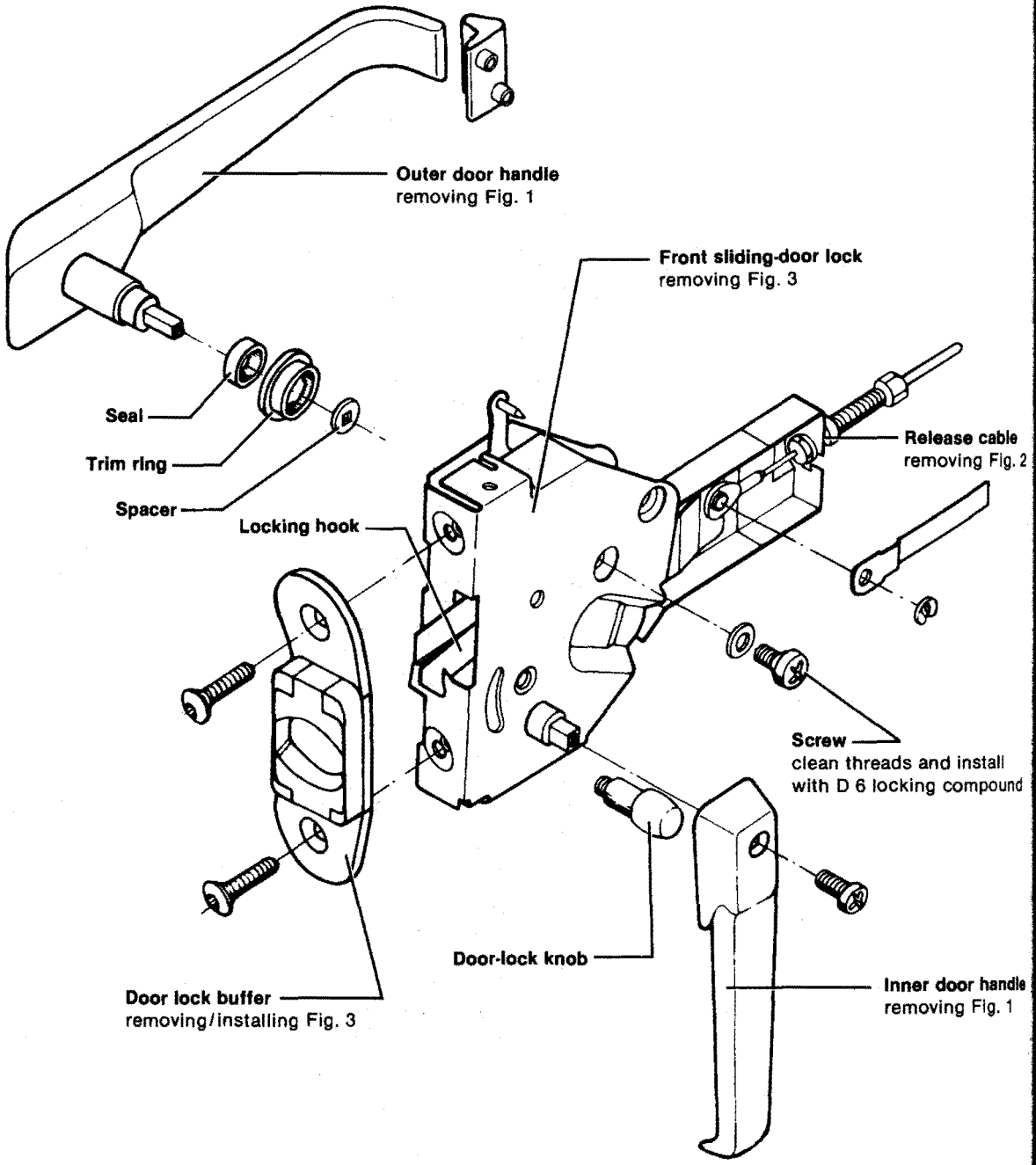
Outer door handle
removing Fig. 1
Front sliding-door lock
removing Fig. 3
Seal
Trim ring
Spacer
Locking hook
Release cable
removing Fig. 2
Screw
clean threads and install
with D 6 locking compound
Door-lock knob
Inner door handle
removing Fig. 1
Door lock buffer
removing/installing Fig. 3
58-197



Fig. 1 Inner/outer door handles, removing

— remove Phillips screw **1** and take off inner handle
— remove screw **2** and remove outer handle together with seal and trim ring

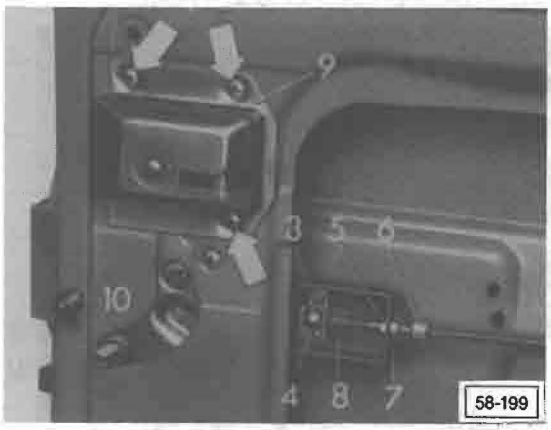

Fig. 2 Release cable/door-lock knob, removing

— remove circlip **3** from release cable **8** and rod **4**
— loosen securing nut **5** and adjustment nut **6** toward front sliding-door lock
— pry out nut **7** and lift out release cable and rod
— remove lock plate **9** by removing screws (**arrows**)
— remove door-lock knob **10**

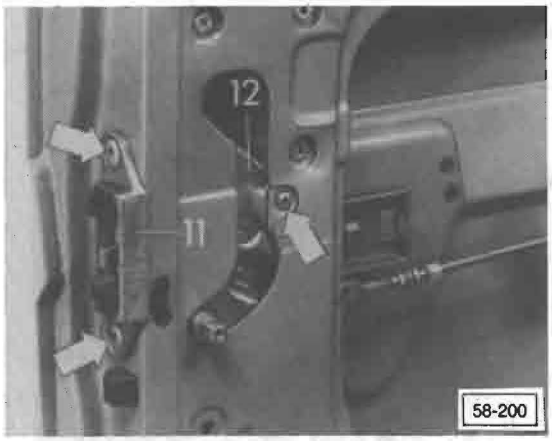

Fig. 3 Front sliding-door lock/door lock buffer, removing/installing

— remove three screws (**arrows**)
— remove lock buffer **11**
— slide front sliding-door lock **12** out
— install in reverse order

Note

Coat threads of screws for door handles with **D 000 600** locking compound or equivalent before installing.

Sliding door cover, removing

Note

Before sliding door can be removed, cover for center guide rail must be removed. Cover and plastic beading are pressed together into U-shaped channel.

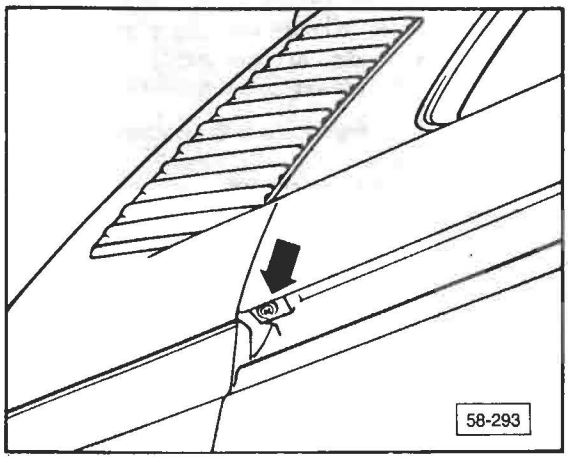

— remove Phillips screw (**arrow**)

more

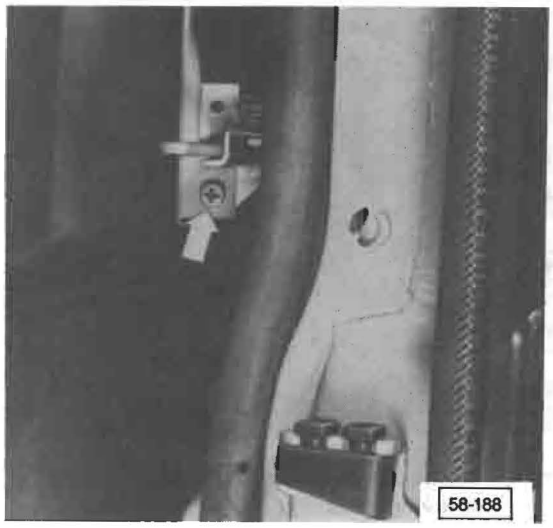

— remove Phillips screw (**arrow**)

Note

Phillips screw in area of door lock can only be removed with door partially opened.

— remove cover, starting at rear, using hammer and plastic wedge

Note

Since cover will be firmly seated after it has been in place for some time, apply silicone spray first to ease removal.

Sliding-door cover, installing

Note

To make installation of cover with plastic beading easier, first glue beading to cover with **AKD 476 KD5 05** adhesive or equivalent.

— install cover by pressing lip with beading into U-shaped channel
— drive in fully with hammer and plastic wedge
— using belt-line as reference, align cover with rear corner panel and sliding door. Beading must be seated evenly all around
— install both Phillips screws

Sliding door, removing

— remove cover

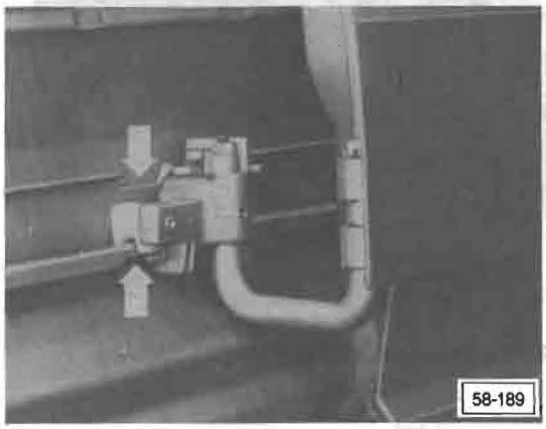

— slide door back until roller and safety guide can be lifted from guide rail at cut-outs (**arrows**)

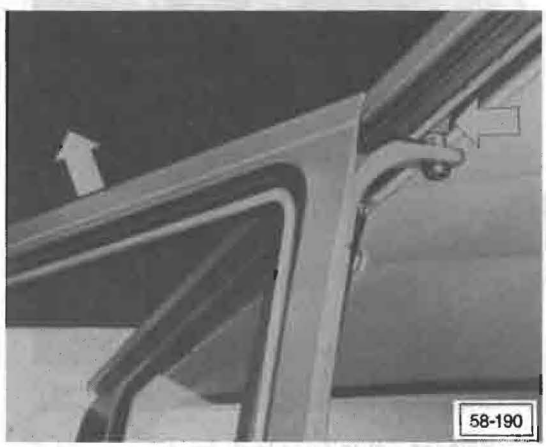

— slide door back until upper guide (**arrow**) can be removed

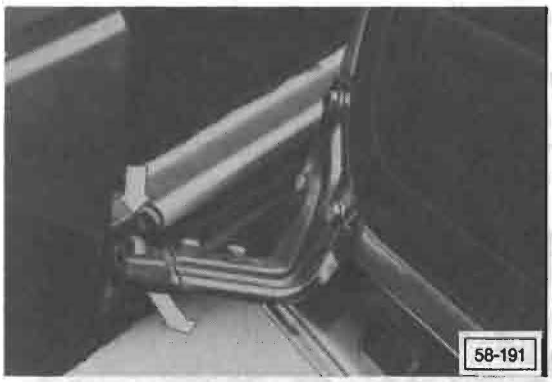

— tilt door slightly away from car
— pull lower lateral and horizontal rollers (**upper arrow**) out of cut-outs in guide rail (**lower arrow**)

Sliding door, installing

— check guide rails, replace if necessary
— check upper center, and lower guides/rollers, replace if necessary
— replace plastic beading on cover or reattach with **AKD 476 KD5 05** adhesive or equivalent
— insert door into lower guide rail first and then into upper guide rail
— slide door forward far enough to insert roller and safety guide into cut-outs of center guide rail
— check operation of sliding door by repeated opening and closing. If necessary, door may have to be adjusted
— reinstall cover

Sliding door, adjusting guide/roller/ guide carrier

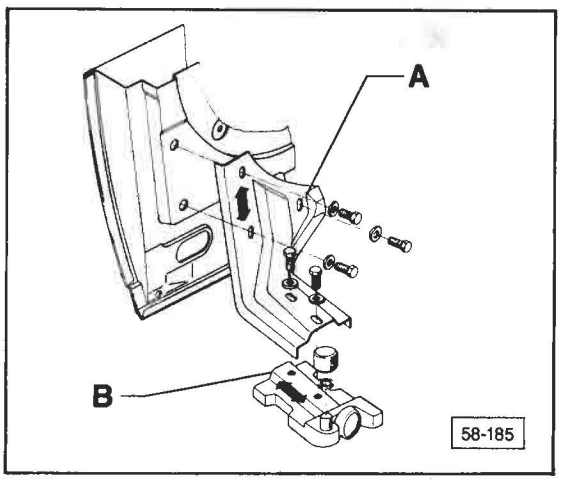

— if door does not line up with door opening, readjust lower guide/roller assembly **B**
— if door height at front is not correct, adjust guide carrier **A**
— adjust height of upper door guide with minimum play between guide and guide rail

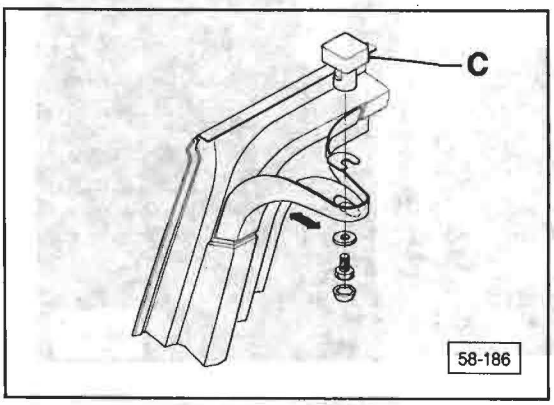

— if door does not line up with upper door opening, remove protective cap on bolt and adjust by relocating guide block **C**
— after adjusting, check fit of door over entire travel
— if fit still incorrect, adjust striker plate

Sliding-door striker plate, adjusting

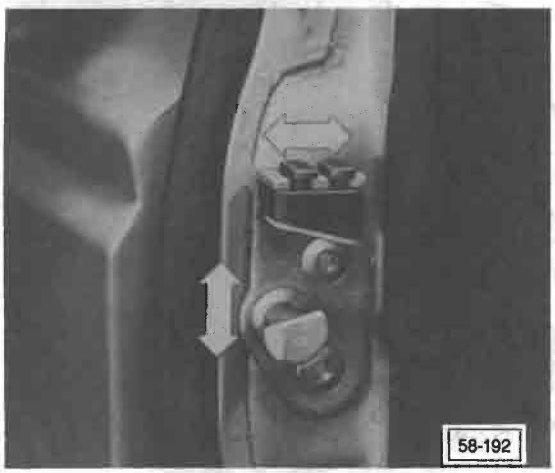

- sliding door can be adjusted by moving striker plate in direction of arrows

Note

After striker plate adjustment, always adjust sliding-door center hinge (page 58.9).

Front sliding-door lock plate, adjusting

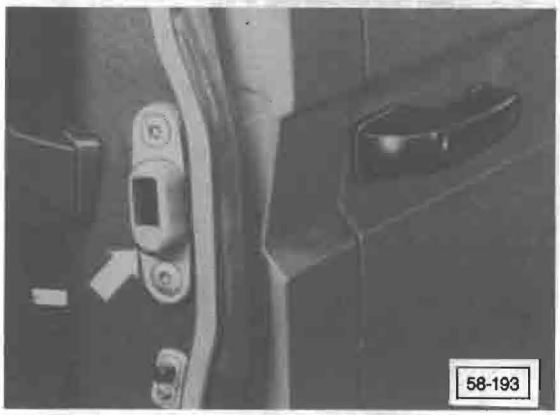

— loosen lock plate slightly
— close door from inside to center lock plate
— hold lock plate in position and open door
— tighten both screws securely
— after lock plate is adjusted, check that door locks easily from outside with key and with lock knob from inside. If necessary, install one or two spacers behind lock plate

Rear sliding-door lock, removing

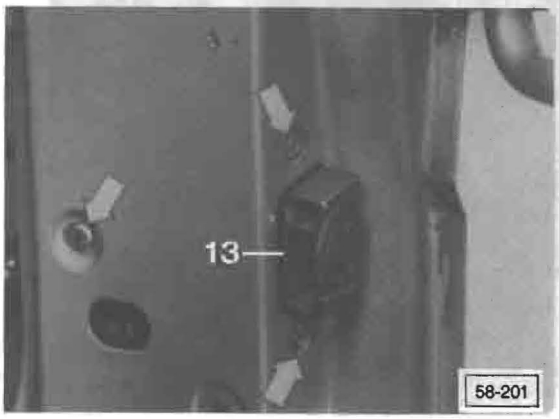

— turn locking pawl to locked position while pulling inner door handle
— pull out Bowden cable from center guide (**15** on illustration 58-202)
— remove three screws (**arrows**)
— remove rear sliding-door lock **13**

Rear sliding-door lock, installing

Note

Bowden cable is protected by clip from disengaging from lock. Changing of clip can only be done after removal of rear sliding-door lock.

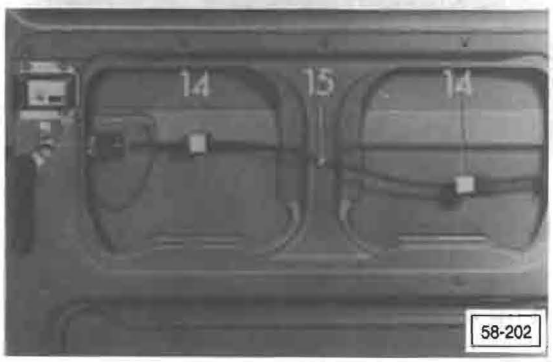

— to prevent rattling noise, foam rubber pads **14** and center guide **15** must be installed

Bowden cable, adjusting

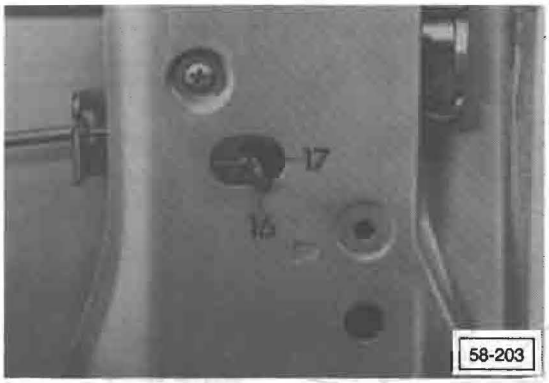

— turn locking pawl of rear sliding-door lock to locked position while pulling inner door handle
— insert 4 mm screw **16** into opening **17** and fasten actuating lever

Bowden cable for remote control lock, adjusting

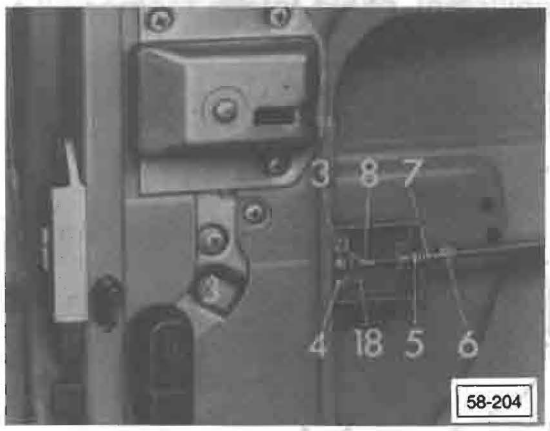

— engage Bowden cable **8** on pull-rod **4** of front sliding-door lock and secure with clip **3**
— press nut **7** into opening of front sliding-door lock
— press in guide for Bowden cable
— guide pull rod of front sliding-door lock through adjustment screw **6** to mounting point **18** of pull rod
— secure adjustment screw **6** with lock nut **5**

Bowden cable adjustment, checking

— adjust door for correct fit in door frame
— if door does not close properly, adjust door striker plate and center hinge (see pages 58.5 and 58.9)

Sliding door, lubricating

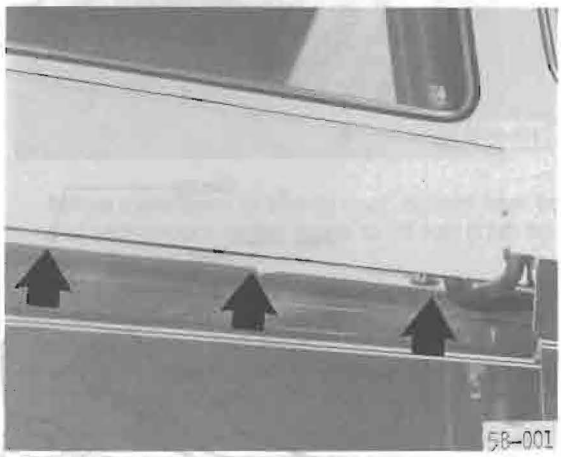

Side Panel runner

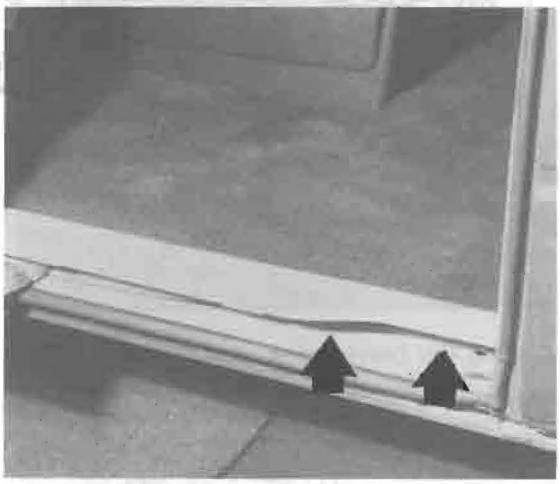

Lower roller track

Note

For the sliding door to work properly, it must be lubricated at the side-panel runner and lower roller track at front end where door goes in.

— clean runner and roller track with an oil-soaked cloth
— apply a thin coat of multi-purpose grease to each roller track (**arrows**)

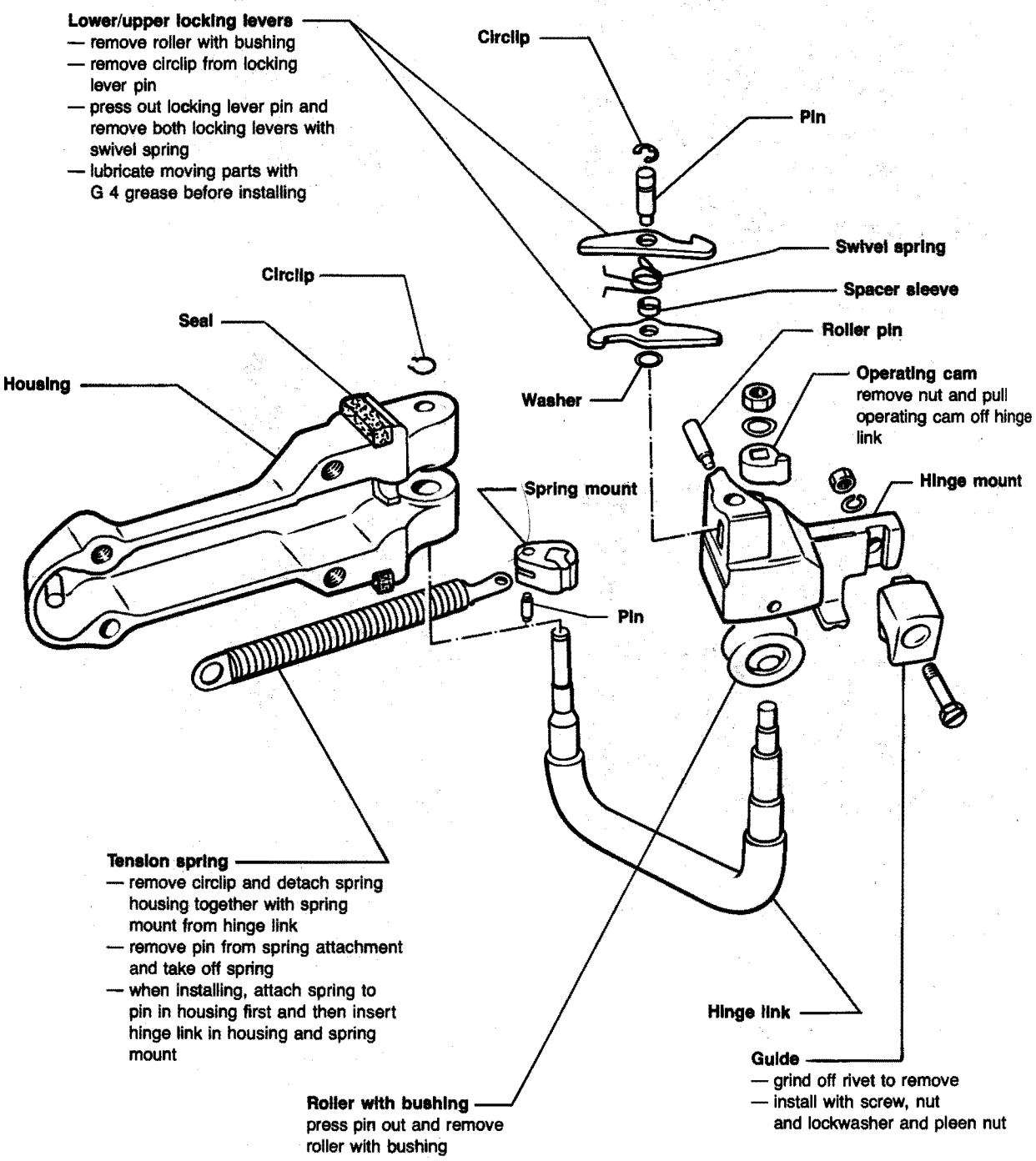
Lower/upper locking levers
— remove roller with bushing
— remove circlip from locking lever pin
— press out locking lever pin and remove both locking levers with swivel spring
— lubricate moving parts with G 4 grease before installing
Circlip
Pin
Swivel spring
Spacer sleeve
Roller pin
Operating cam
remove nut and pull operating cam off hinge link
Hinge mount
Circlip
Seal
Housing
Washer
Spring mount
Pin
Tension spring
— remove circlip and detach spring housing together with spring mount from hinge link
— remove pin from spring attachment and take off spring
— when installing, attach spring to pin in housing first and then insert hinge link in housing and spring mount
Hinge link
Guide
— grind off rivet to remove
— install with screw, nut and lockwasher and pleen nut
Roller with bushing
press pin out and remove roller with bushing
58-311

Sliding-door center hinge, removing

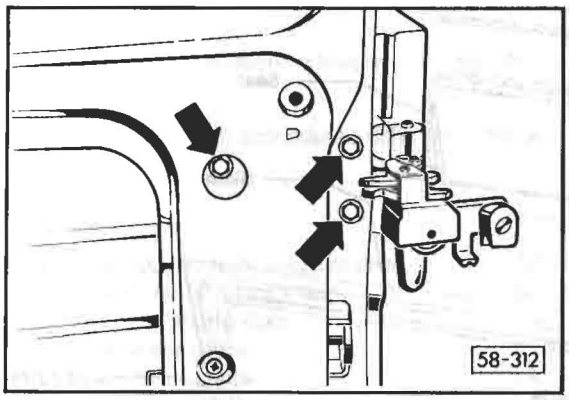

Note

Center hinge can only be removed when sliding door has been removed.

— remove bolts (**arrows**) and remove hinge assembly

Sliding-door center hinge, installing

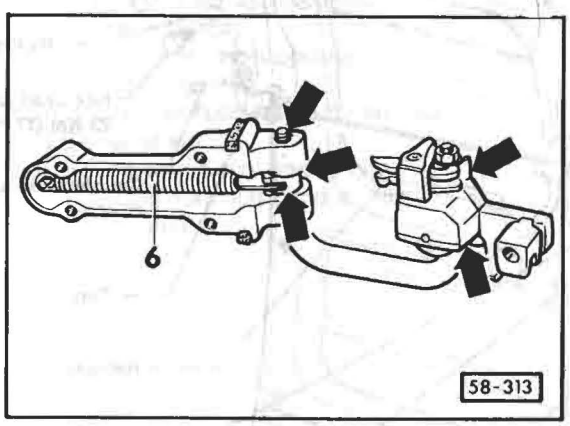

— before installing lubricate with oil (**arrows**)
— lubricate return spring **6** with multi-purpose grease
— after installation, adjust hinge assembly

Sliding-door center hinge, adjusting



— before installation of sliding door, tighten front bolt **1** of sliding-door center hinge to 23 Nm (17 ft lb)
— hand-tighten bolts **2**
— install sliding door and close from outside
— check front and rear gap, correct if necessary after loosening bolt **1**
— after correction is made, retighten bolt to 23 Nm (17 ft lb)



— pry down on guide carrier (**arrow**) until guide/roller **3** is positioned on center guide rail

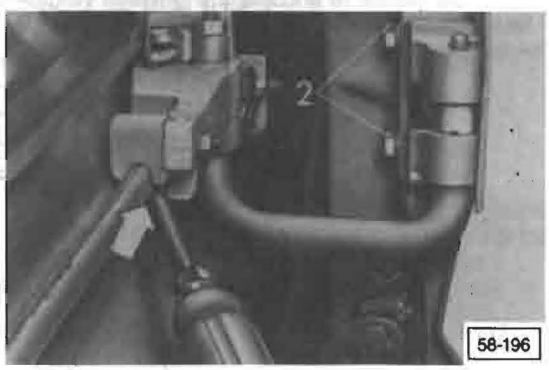

— open sliding door carefully while supporting rear of door in area of belt line
— tighten bolts **2** to 23 Nm (17 ft lb)

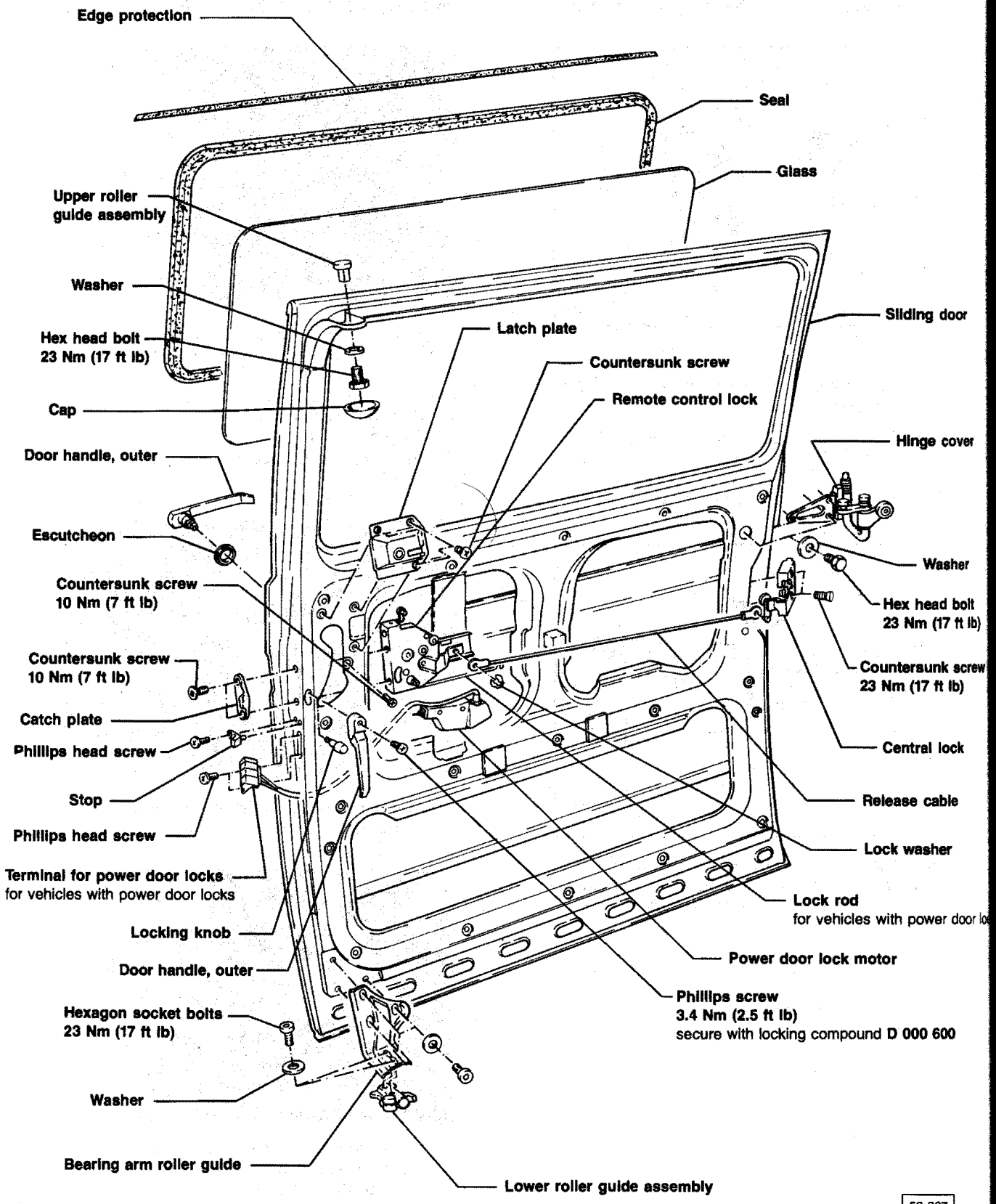
Edge protection
Seal
Glass
Upper roller guide assembly
Washer
Hex head bolt 23 Nm (17 ft lb)
Cap
Door handle, outer
Escutcheon
Countersunk screw 10 Nm (7 ft lb)
Countersunk screw 10 Nm (7 ft lb)
Catch plate
Phillips head screw
Stop
Phillips head screw
Terminal for power door locks
for vehicles with power door locks
Locking knob
Door handle, outer
Hexagon socket bolts 23 Nm (17 ft lb)
Washer
Bearing arm roller guide
Lower roller guide assembly
Latch plate
Countersunk screw
Remote control lock
Sliding door
Hinge cover
Washer
Hex head bolt 23 Nm (17 ft lb)
Countersunk screw 23 Nm (17 ft lb)
Central lock
Release cable
Lock washer
Lock rod
for vehicles with power door lo
Power door lock motor
Phillips screw 3.4 Nm (2.5 ft lb)
secure with locking compound D 000 600
58-267

Sliding door, modifications

(1985 model year)

The sliding door has been redesigned for the 1985 model year.

Some of the following procedures differ from those for earlier models.

Procedure	Page
Sliding door cover, removing/installing	58.11
Sliding door, removing/installing	58.12
Adjustments to sliding door	
a lower roller guide	58.14
b upper roller guide	58.14
c striker pin with hinge link	58.15
d hinge link	58.16
Remote control lock	58.18
Central lock	58.20
Hinge link/parts subject to wear, replacing	58.21

Problem	Adjustment
Door height at front incorrect	a
Door height incorrect	c
Door is not flush with outer contour of B-pillar at bottom	a
Door not flush with outer contour of C-pillar	c
Front of door not flush with outer contour of B-pillar at top	b
Gap around door differs front to rear	c, d
When opening from outside, door sticks in C-pillar area	d

Sliding door cover, removing

Note

Before sliding door can be removed, cover for center guide rail must be removed. Cover and plastic beading are pressed together into U-shaped channel.

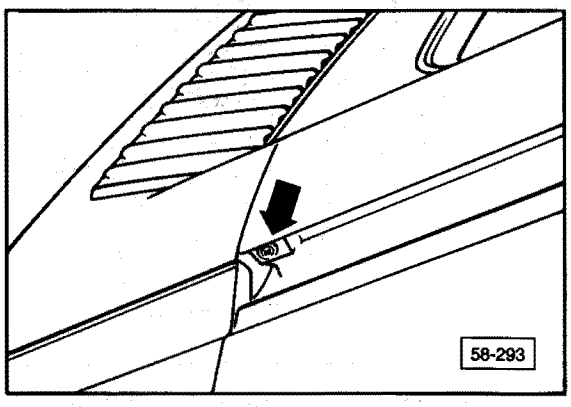

— remove Phillips screw (**arrow**)

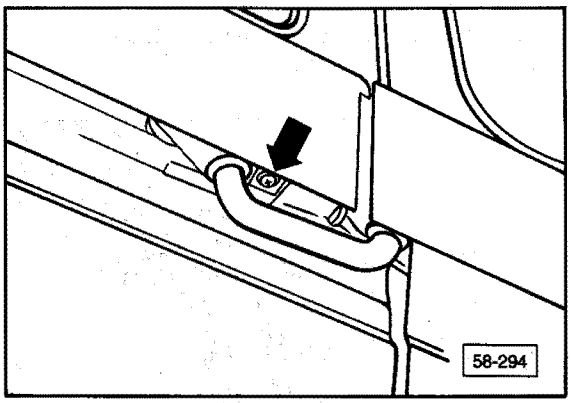

— open sliding door slightly
— remove screw (**arrow**) at front of cover
— spray beading with silicone or similar lubricant
— using hammer and plastic wedge, carefully tap cover out towards top. Start from rear and work forward.

Sliding door cover, installing

— glue beading to cover with adhesive or equivalent
— press cover and beading into securing rail and tap downward with hammer and plastic wedge
— check position of cover relative to body lines of rear panel and sliding door. The beading must make even contact along entire length
— reinstall screw (**arrow**)

Sliding door, removing

— remove sliding door cover

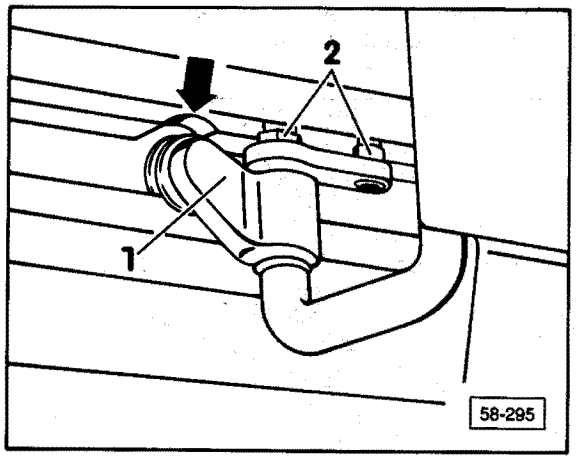

— push door back until roller carrier **1** is positioned beneath recess in guide rail (**arrow**)
— lift door at rear and pivot roller carrier **1** out of guide rail
— lower door slightly and pivot hinge link upper rollers **2** out of guide rail

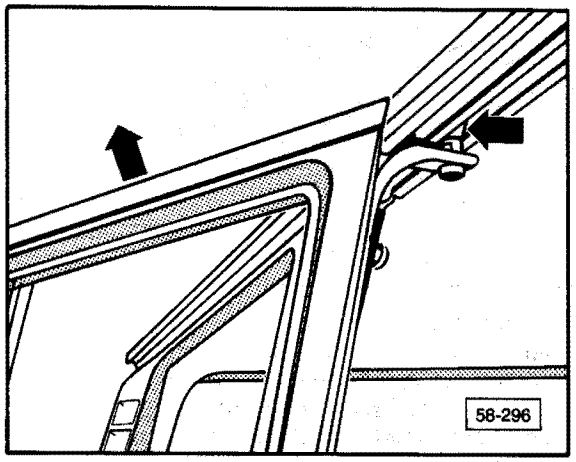

— push door back as far as possible and lift at rear until upper roller can be taken out of guide rail

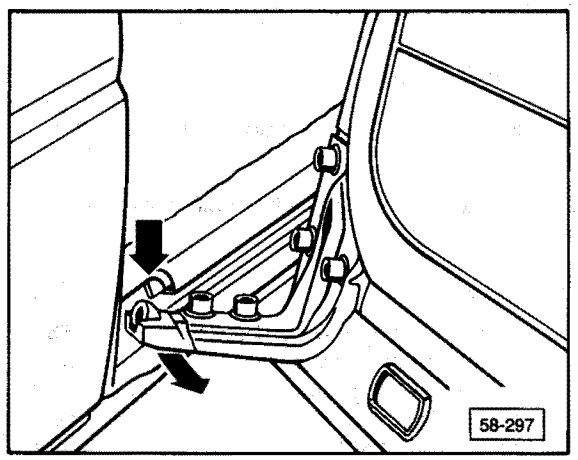

— swing door outward and pull guide and bearing rollers out of guide rail opening

Sliding door, installing

— check and replace door seal if necessary

Note

Before applying adhesive, Part Number **AKD 476 KD5** or equivalent, ensure that the old adhesive has been completely cleaned off.

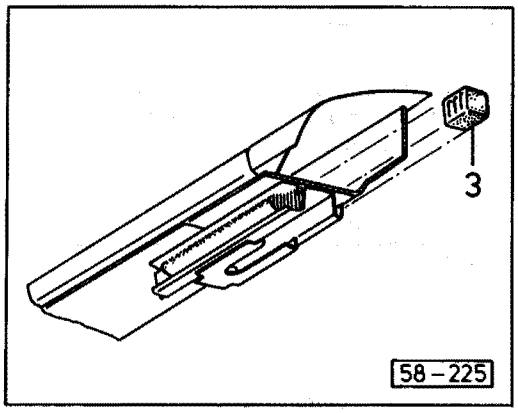

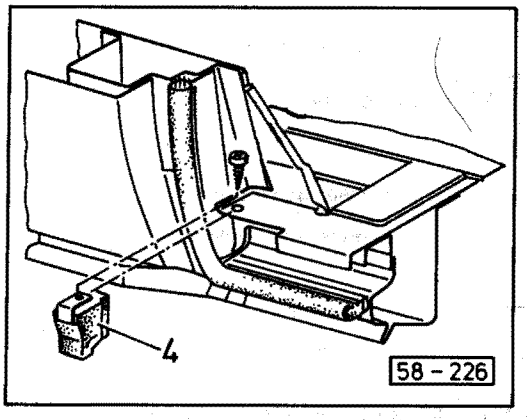

— check upper **3** and lower **4** stops and replace if necessary

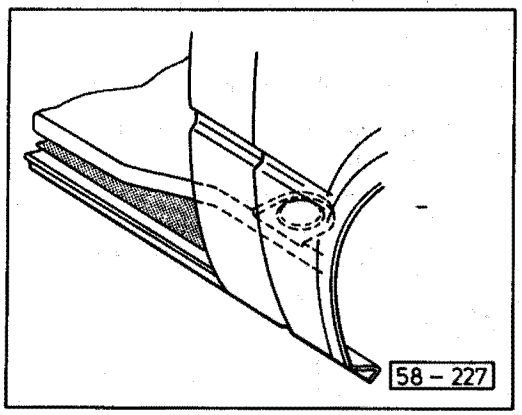

— lightly lubricate front opening of lower roller guide with multi-purpose grease (shaded area)

— check upper roller guide and lower bearing and guide rollers on door. Replace if necessary
— insert door in lower guide rail first, then in upper guide rail
— push door forward until bearing roller of carrier is located in guide rail recess area

— insert guide rollers into rail
— pivot roller carrier in direction of rail and locate bearing roller on guide rail beneath recess
— check operation of door during opening and closing. Adjust door as required
— install sliding door cover

Sliding door, adjusting

Note

Two mechanics are required to perform the adjustment operations on the sliding door.

The sliding door is correctly positioned when the gap with the door closed is even all the way around.

The door waistline (depression) must be in line with that on the body. Also, the door must not be positioned too far in or out.

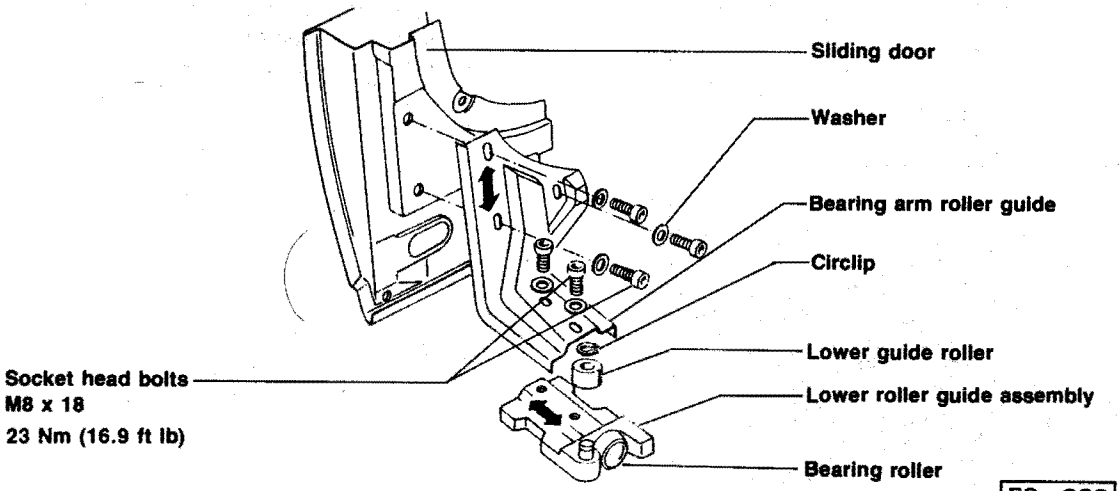

a - Adjusting lower roller guide

• Door height incorrect at front:

— relocate bearing arm roller guide by loosening upper bolts and moving door to proper height. Retighten bolts to proper torque

• Front of door not flush with outer contour of B-pillar at the bottom:

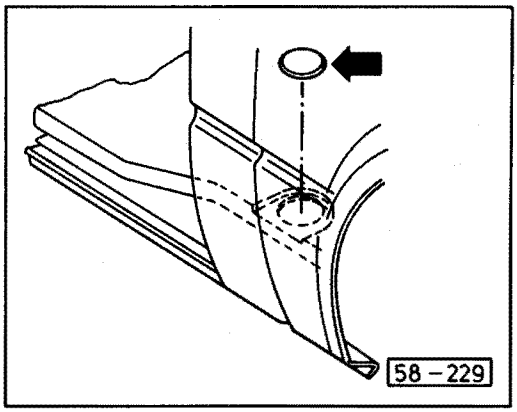

— push plastic cap in floor up from beneath vehicle
— loosen two bolts fastening lower roller guide assembly
— press roller guide as far as door stop and tighten bolt on door side only
— carefully close door
— from inside vehicle, loosen bolt on door side slowly
— when door is flush with B-pillar outer panel, retighten bolt
— open door and tighten both bolts to specified torque

b - Adjusting upper roller guide

• Front of door not flush with outer contour of B-pillar at the top:

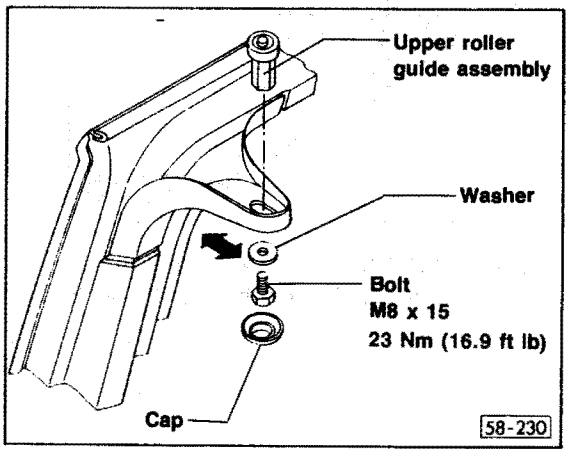

— remove cap
— loosen bolt and reposition roller in elongated hole. Retighten bolt to proper torque

c - Adjusting striker pin w/hinge link

- door not flush with outer contour of C-pillar
- door height incorrect
- gap around door differs front to rear

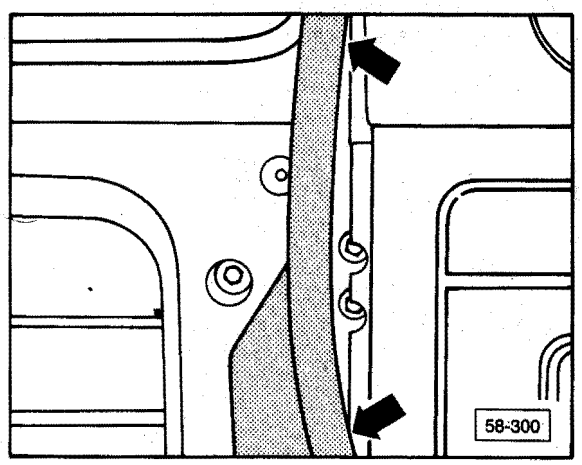

— open door and remove beading from C-pillar (**arrows**)

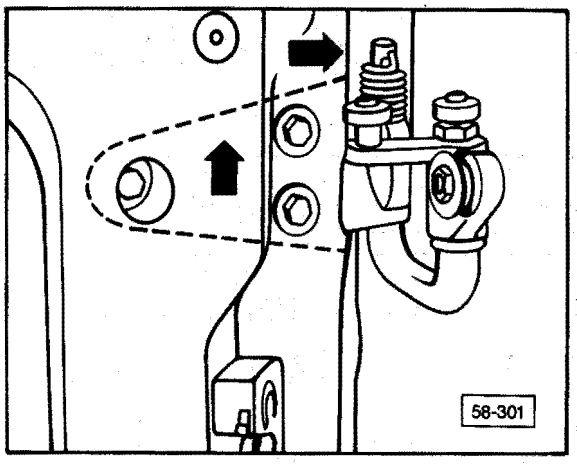

Note

Each time before repositioning or installing the striker pins, the hinge link bolts must be loosened and the link must be pushed upward and to the rear as far as possible (**arrows**). The bolts should be tightened by hand only.

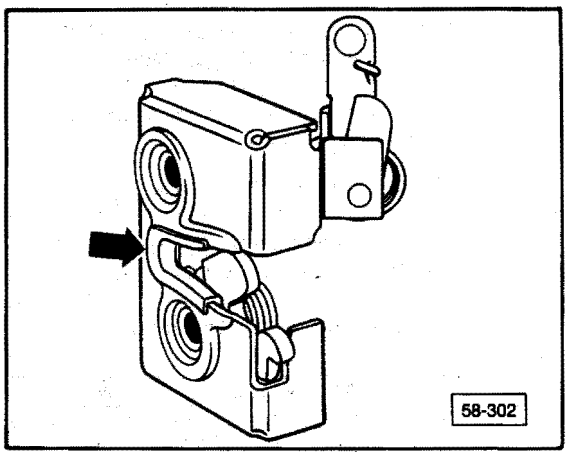

— insert plastic spacer clip (**arrow**) in lock opening

Note

New locks are supplied with plastic clips.

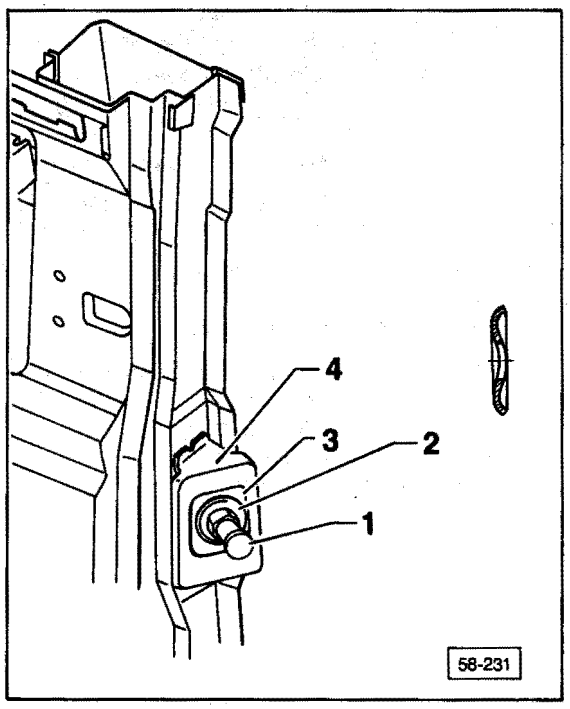

1 Striker pin
2 Spring plate
(collar must always face outward)
3 Adjustment aid line for striker pin
4 Striker pin/spring plate mounting bracket

— install striker pin **1** and spring plate **2** to mounting bracket **4**. Ensure that spring plate is located centrally in adjustment line **3**
— slowly push door to front, lifting door slightly at same time in waistline area

— with door closed, check for height and flushness with outer panel at center of door. Measure amount of correction needed
— open door and mark amount of correction on striker pin mounting bracket

— move striker pin into position marked
— close door and recheck position in opening
— when door is correctly adjusted for height and flushness with outer panels, loosen hinge link bolts
— align door longitudinally from outside using plastic wedge

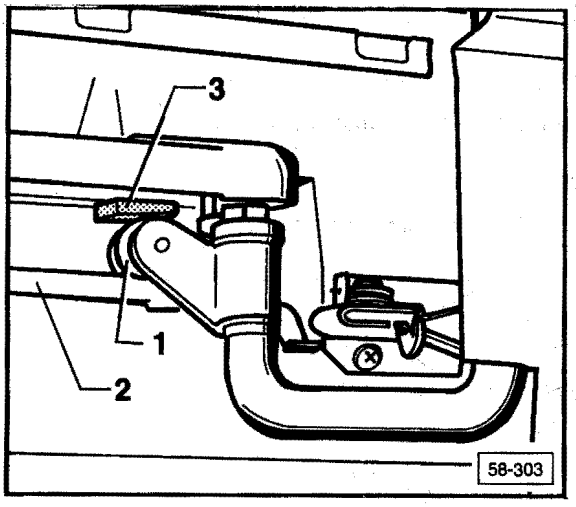

— pull roller carrier **1** down by hinge link until bearing roller rests on rail **2**
— tighten hinge link bolts from inside

— open door and remove spacer clip from lock
— tighten all bolts to correct torque
  • hinge link bolts: 23 Nm (17 ft lb)
  • striker pin: 50 Nm ± 5 (36 ft lb ± 3.6)
— install beading on C-pillar flange

d - Adjusting hinge link separately

- gap around door differs
- when opening door from outside, door sticks in C-pillar area

If the striker pin does not need repositioning, the hinge link can be adjusted separately:

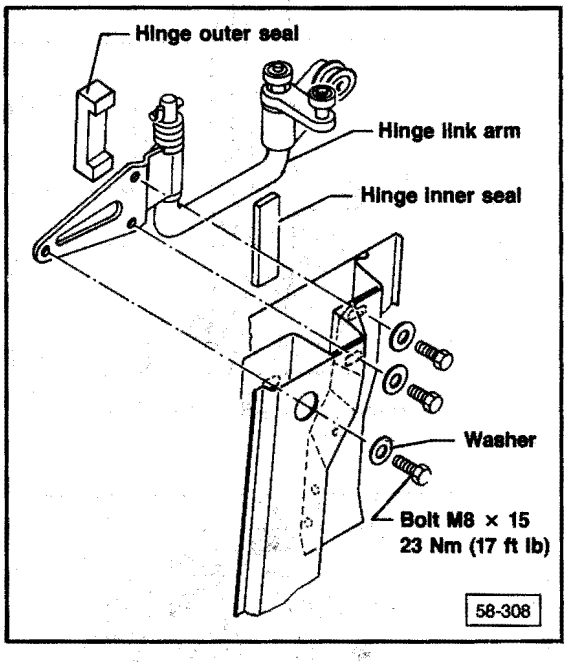

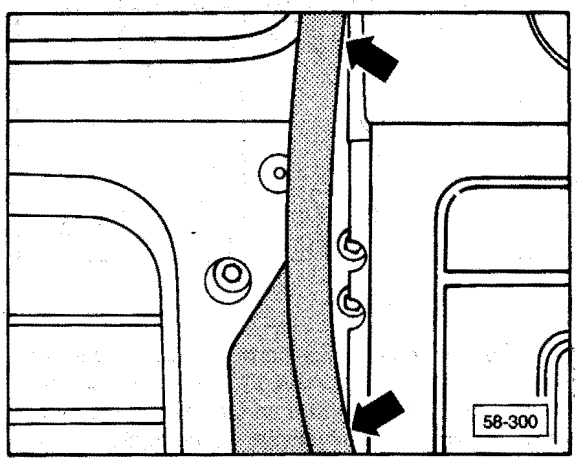

— open door and remove beading from C-pillar (**arrows**)
— remove door complete with hinge link out of center guide rail (see sliding door, removing/installing) and rest rear of door on suitable support
— loosen hinge link bolts

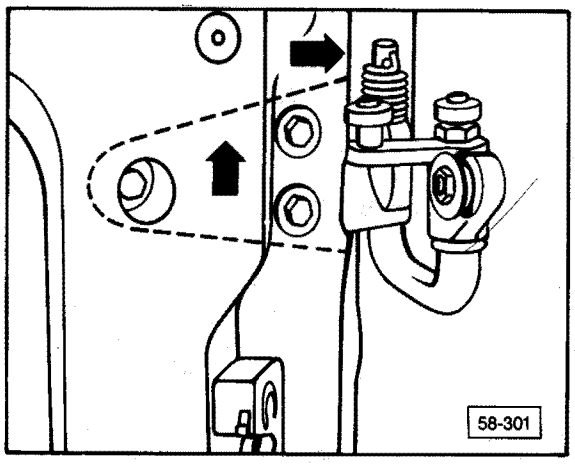

— push hinge link upward and to the rear as far as possible (**arrows**). Hand tighten bolts
— hang door with hinge link into center guide rail

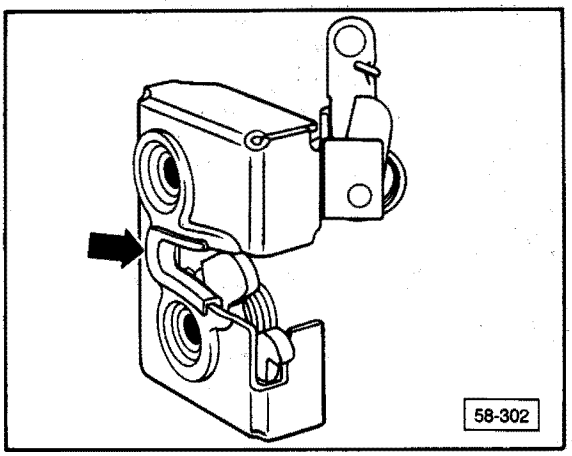

— insert plastic spacer clip (**arrow**) into lock opening
— carefully push door to front slowly, lifting door slightly at same time in waistline area
— loosen hinge link bolts from inside vehicle
— check door gap at front and rear and adjust door with plastic wedge

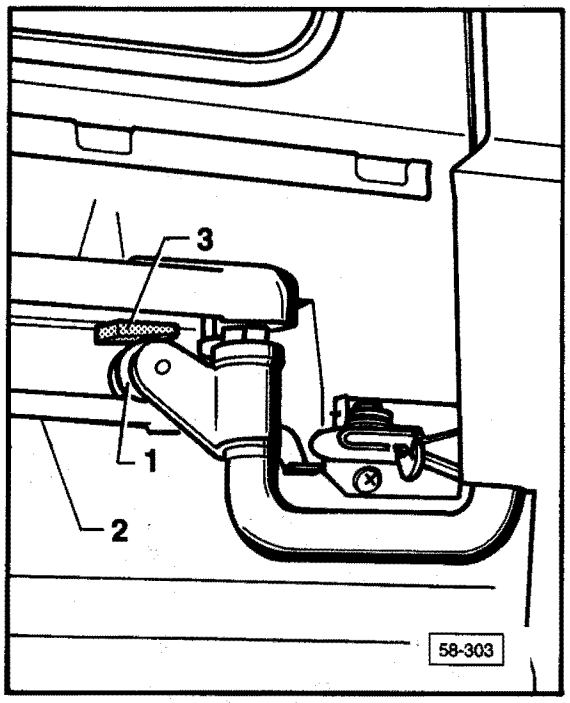

— insert piece of wood or plastic wedge **3** between roller carrier and rail **2** until roller **1** rests on rail **2**
— tighten hinge link bolts from inside
  • tightening torque: 23 Nm (17 ft lb)
— open door and remove spacer clip from lock
— install beading on C-pillar flange

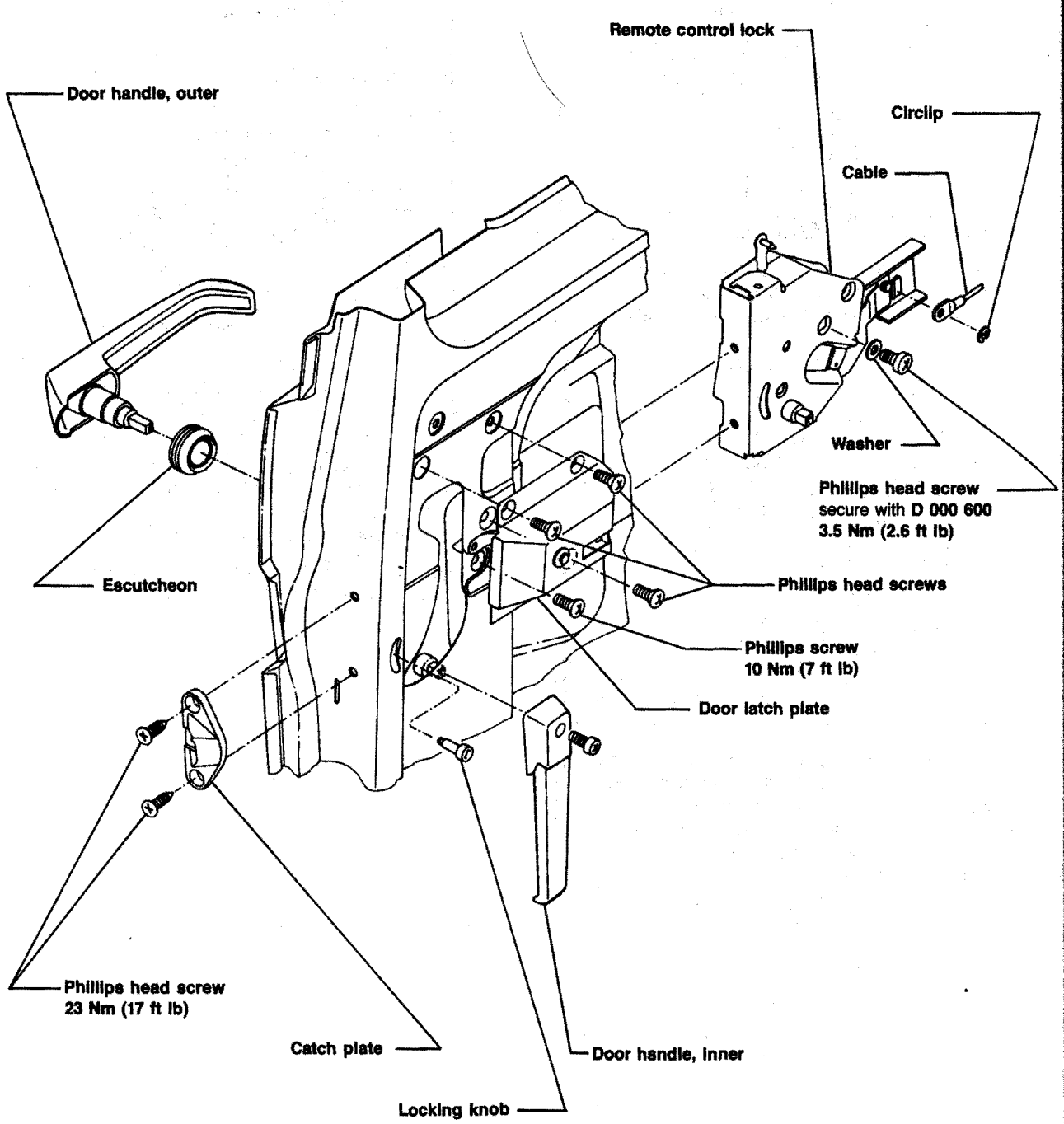

58.18 Remote control lock, assembly

From 1985 m.y.

Remote control lock, removing

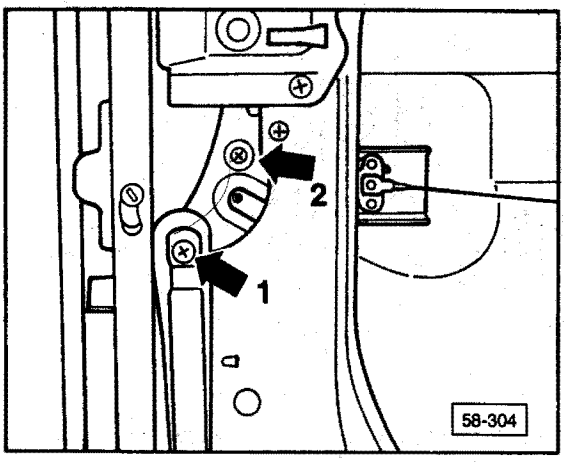

— remove screws **1** and **2** from inner and outer door handles
— remove inner and outer door handles and spacer washer

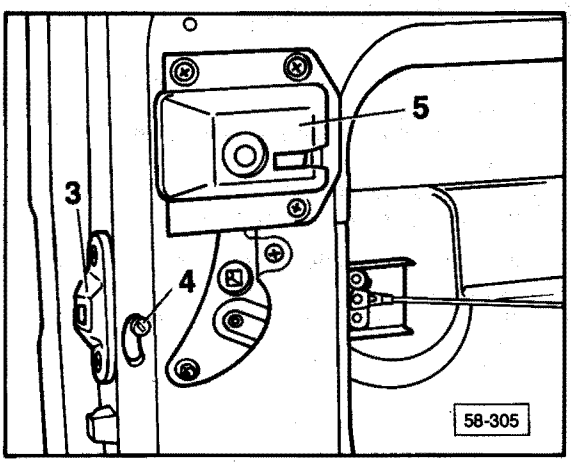

— remove catchplate **3**
— remove locking knob **4**
— remove door latch plate **5**

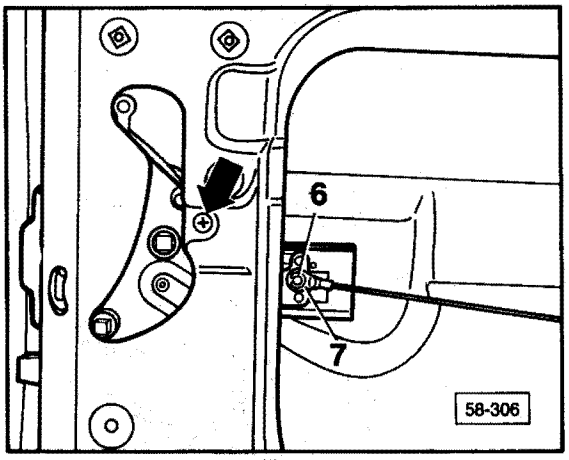

— remove circlip **6** from remote control lock pin and remove cable **7**
— remove screw (**arrow**) and pull remote control lock out between door inner and outer panels

Remote control lock, installing

— push lock in between inner and outer panels, align catchplate and screw loosely in position
— coat inner and outer door handle fastening screws with **D 000 600** or equivalent and install
— install cable on remote control lock pin and secure with circlip
— tighten lock securing screws

Note

For tightening torques see Fig. 58-238 on preceding page.

— install locking knob

Central lock, removing

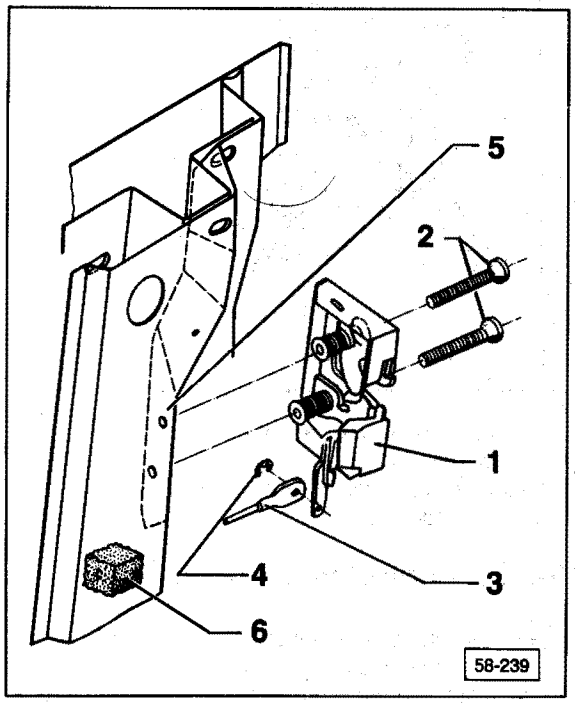

1 Central lock
2 Countersunk screw
- 23 mm (17 ft lb)

3 Cable
4 Circlip
5 Sliding door/rear contact surface
6 Foam cable pad
- 20 mm (25/32 in.)

Note

The central lock can be removed and installed with the door on the vehicle.

— remove sliding door trim panel

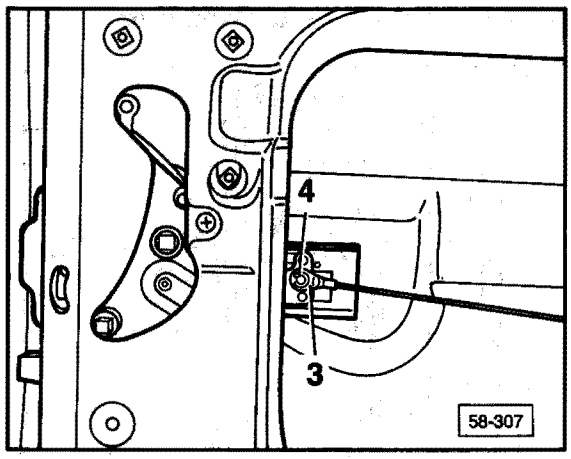

— remove circlip 4 from pin on remote control lock and remove cable 3
— remove screws 2 (see Fig. 58-239)
— remove central lock with cable
— remove circlip 4 and remove cable from central lock (see Fig. 58-239)

Central lock, installing

— install cable on central lock pin and secure with circlip
— push cable into door and push foam pad onto cable
— screw lock to sliding door
- tightening torque: 23 Nm (17 ft lb)

— install cable on remote control lock pin and secure with circlip
— stick foam cable pad to center of door

Hinge link/parts subject to wear, replacing

Note

All illustrated parts are available as individual items. Replace only those parts which are actually damaged.

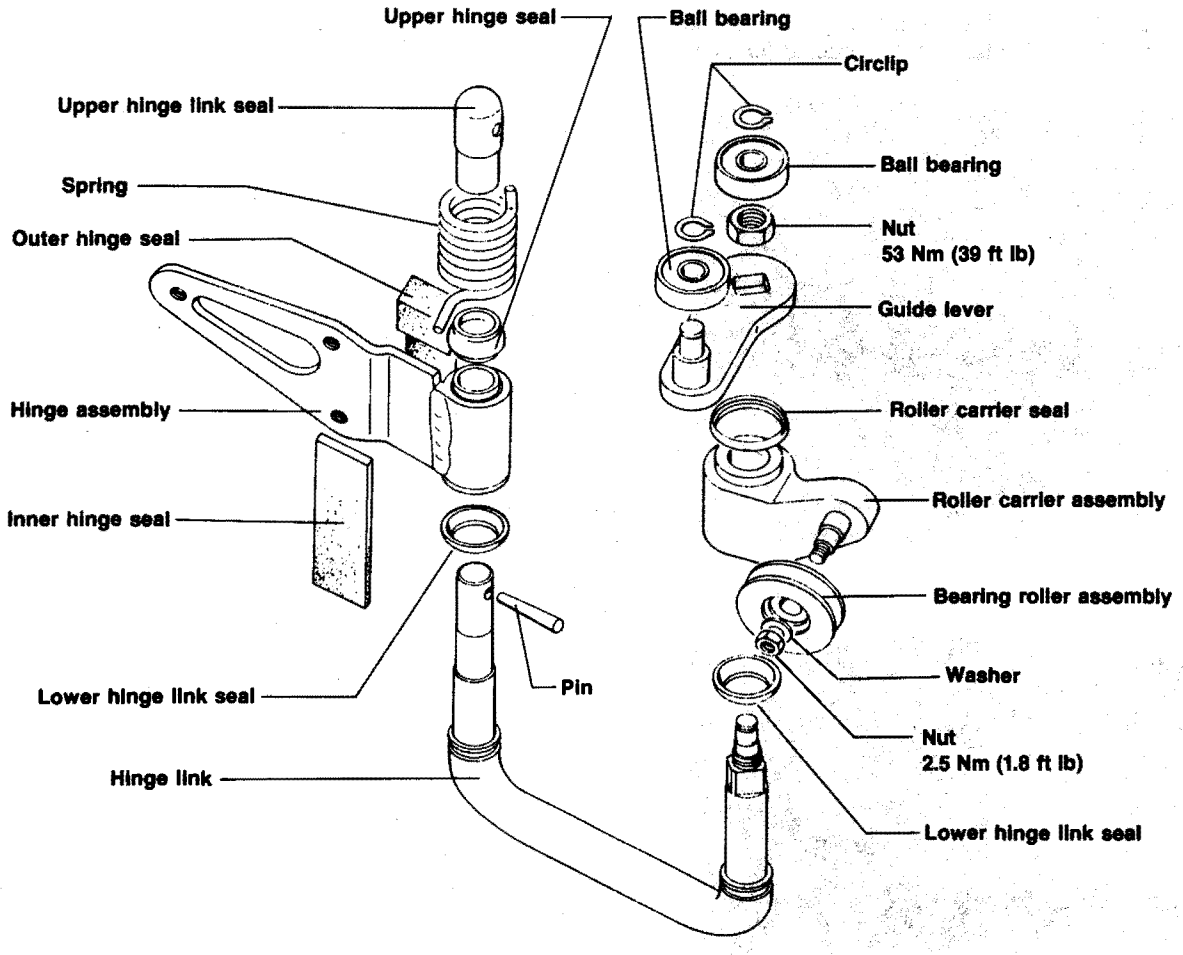

58-242

Outside sliding door handle with option M145, installing
(Transporter, Canada only)

Note

When performing repairs to the sliding door or lock, it has been found that the outer door handle locking cylinder is often being damaged as a result of incorrect installation.

Before re-installing the handle, turn the lock with the key so that the locking tab is fully retracted (**arrow**).

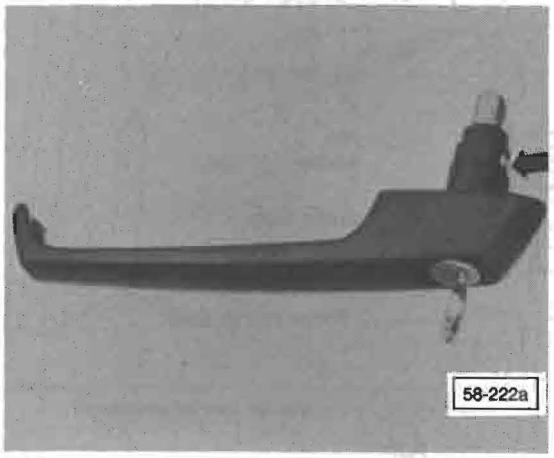

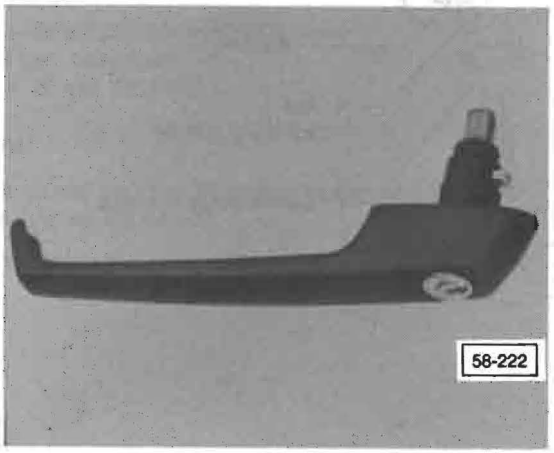

Quick Data

Index

– Guide plate adjusting 60.4
– Height alignment, front 60.3
– Height alignment, rear 60.4
– Parallel adjustment 60.4
– Rear drain hose
  replacing 60.6
– Sunroof panel
  adjusting 60.3
  removing/installing 60.2
– Sunroof trim panel
  removing/installing 60.3
– Sunroof water drains
  cleaning 60.6

Sunroof panel, removing

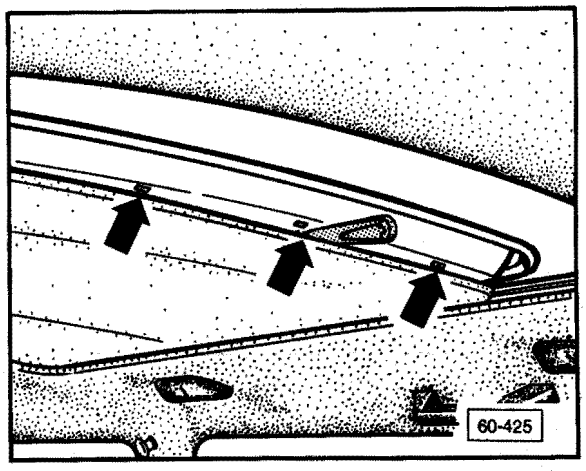

— open sunroof panel slightly
— snap out 5 trim-panel clips (**arrows**) at front edge of sunroof with plastic wedge

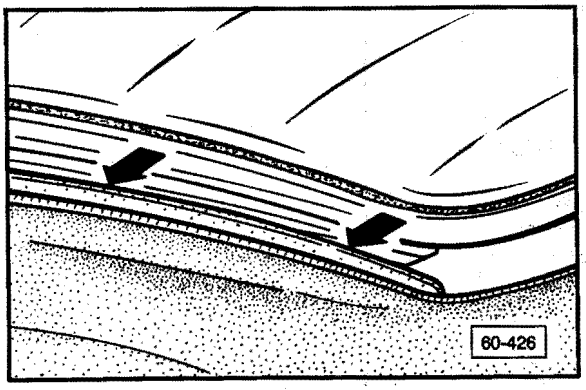

— push trim panel to rear as far as stop (**arrow**)

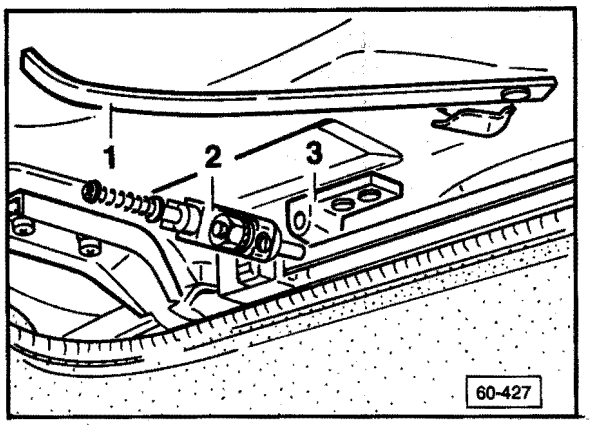

— pull sunroof panel forward
  • stop pulling before lifter starts activating
— swing leaf spring **1** to center
— pull crank **2** out of support **3**

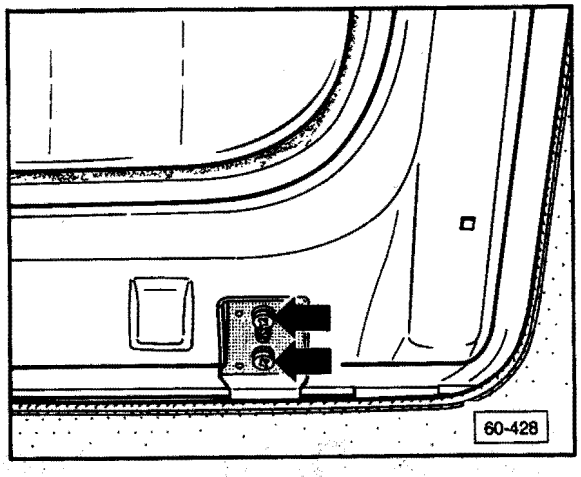

— remove both Phillips screws (**arrows**) from front guide

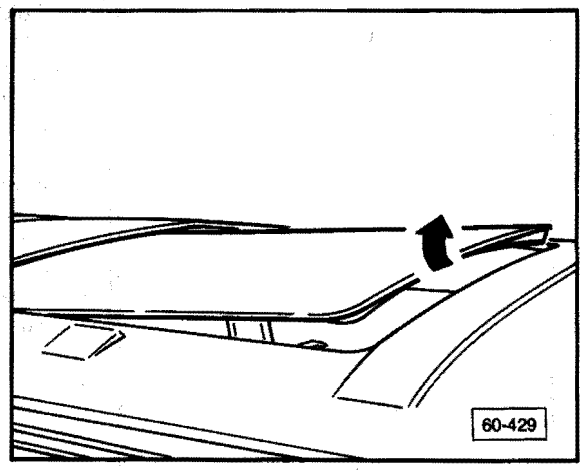

To remove sunroof panel
— lift panel at front (**arrow**)
— lift out panel at rear through openings in guide rail

Sunroof, installing

— install in reverse order of removal

Sunroof trim panel, removing

— remove sunroof panel

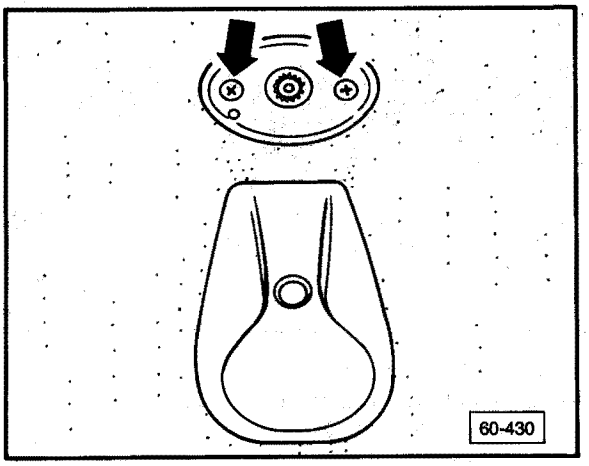

— remove drive handle
— loosen both Phillips screws (**arrows**) approximately 6 turns
— detach cables at drive

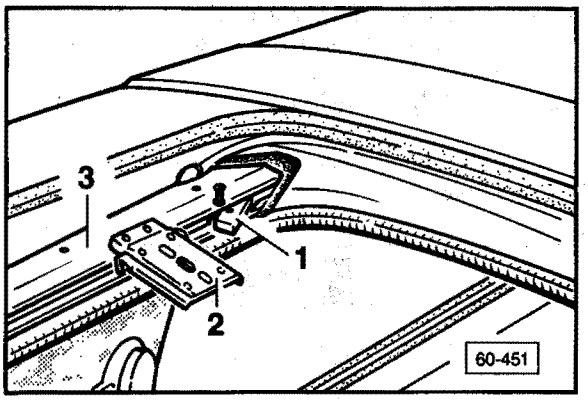

— remove guide block **1**
— move guide plate **2** to front and slide out of rail **3**

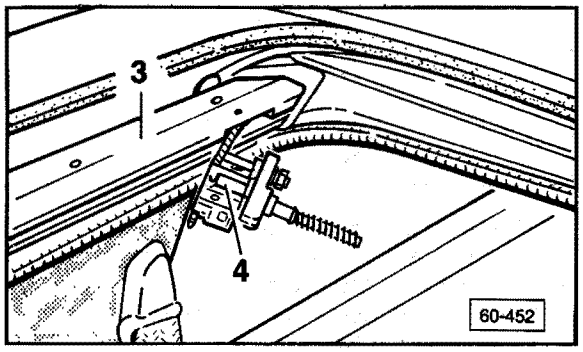

— move cable guides **4** to front and slide out of rail **3** with cable from opening

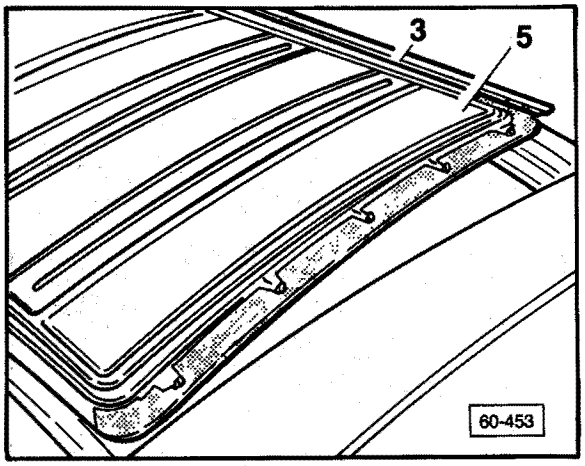

— remove screws of rail **3** on one side
— push rail to rear and lift together with sunroof trim panel **5**
— remove sunroof trim panel **5** by slightly pushing rail **3** to outside

Sunroof trim panel, installing

— install in reverse order of removal

Sunroof panel, adjusting

— detach trim panel first and push to rear (see page 60.2)

Height alignment, front

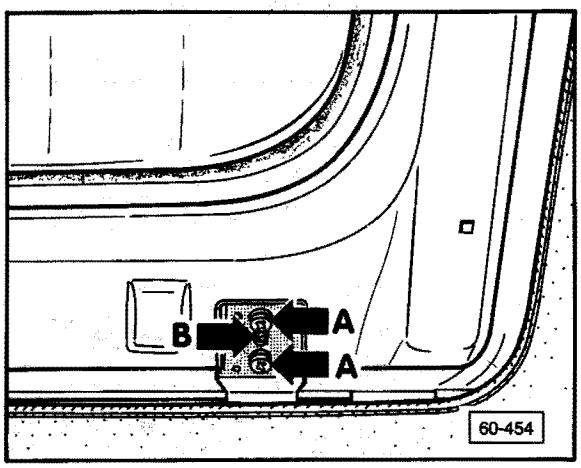

— loosen Phillips screws (**arrows A**)
— align sunroof panel by turning adjusting screw (**arrow B**)
— tighten Phillips screws (**arrows A**)

Height alignment, rear

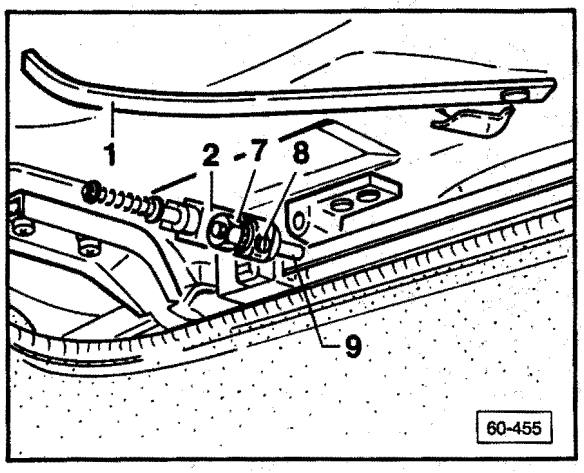

— lower sunroof panel at rear
— swing leaf spring **1** to center
— pull crank **2** out of support
— loosen nut **7** and screw **8**
— adjust front height alignment by moving pin **9** in crank slot **2**

— tighten screw **8** and nut **7**
— slide crank **2** into support
— close sunroof and check height alignment
  • readjust if necessary

Guide plate, adjusting

Note

Always adjust guide plates after sunroof panel rear-height alignment.

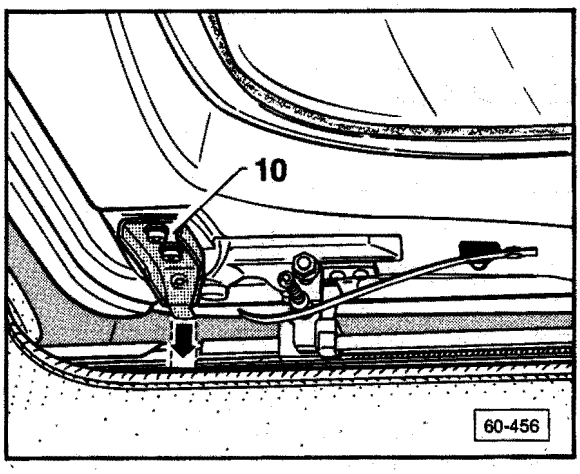

— adjust guide plate **10** with sunroof panel closed and plates located above slot in rails (**arrow**)

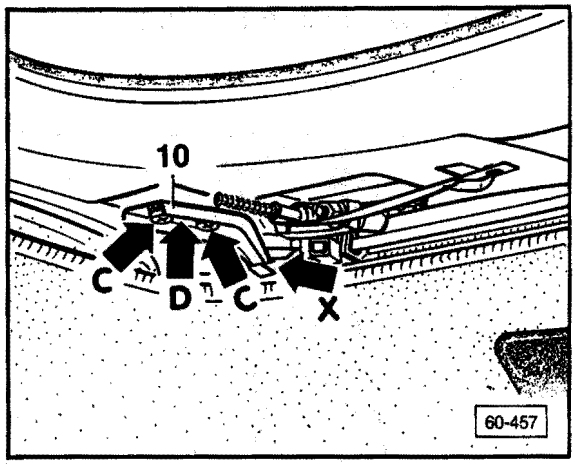

— lower sunroof panel
— loosen Phillips screws (**arrows C**)
— adjust guide plate **10** in height by turning adjusting screw (**arrow D**)
  • guide plate **10** must not have play in rail (**arrow X**)
— tighten Phillips screws (**arrows C**)

Note

Misadjustment of guide plates can cause noises and make sunroof hard to open and close.

Parallel adjustment

— first detach trim panel and push it to rear (see page 60.2)

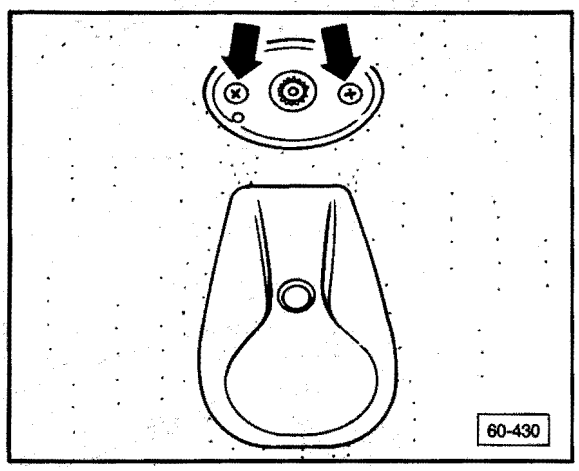

— lower sunroof panel at rear (turn drive handle approximately 2 turns counterclockwise)
— remove handle and cover plate
— loosen both Phillips screws (**arrows**) approximately 6 turns
— detach control cables at drive
— move sunroof panel forward and back in guide rail several times by hand

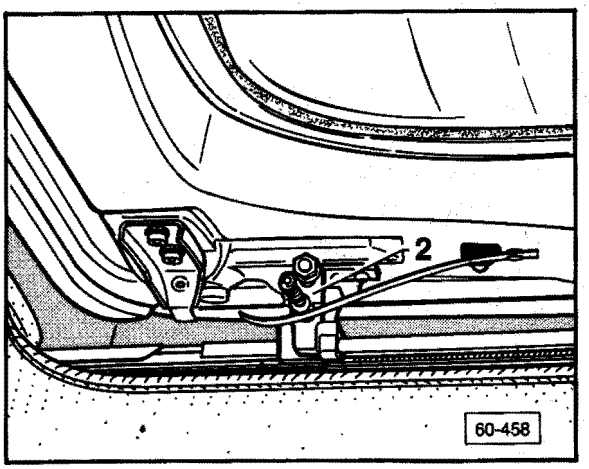

— push panel to front stop
— press panel upwards by hand at rear
— turn both cranks **2** into upright position

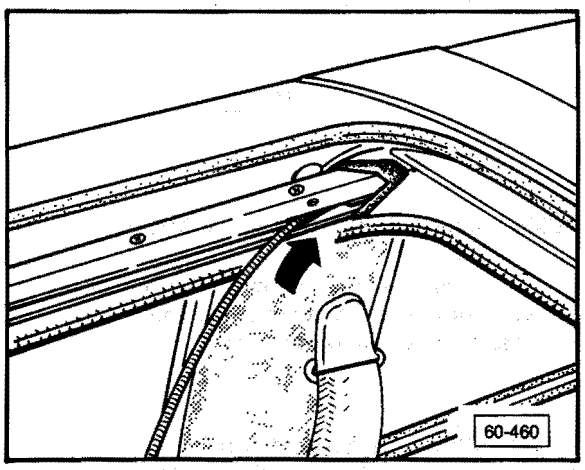

— turn drive, with handle attached, to the right to stop
— lubricate control cables and attach to drive

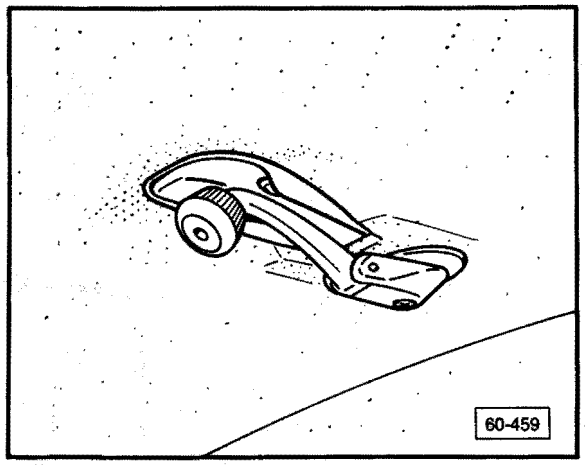

— install cover plate
— install drive handle so it rests in recess when sunroof is closed

Note

If necessary, replace **both** control cables.

Note

The sunroof operates with cables **exposed**. This is so if cables are replaced or panel is hard to move, cables may be lubricated with multipurpose grease.

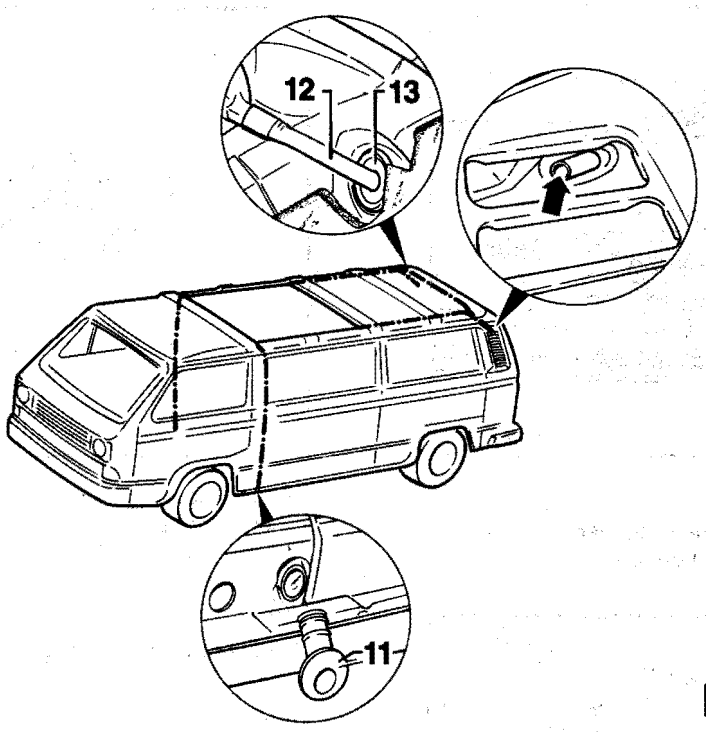

Sunroof water drains, cleaning

Front

— pull out flap **11** and clean

Rear

— clean hose opening in air intake duct (**arrow**)

Note

Use a speedocable to clean out drains.

Rear water drain hose, replacing

— carefully loosen headliner at rear door opening
— pull hose **12** off pipe, and from grommet **13**
— install new hose in reverse order

Note

Grommet **13** can be replaced or adjusted without loosening headliner by going through the air intake duct.

Index

—Tarpaulin 61.2, 61.3
(Canada)

Tarpaulin frame and tarpaulin, service installation

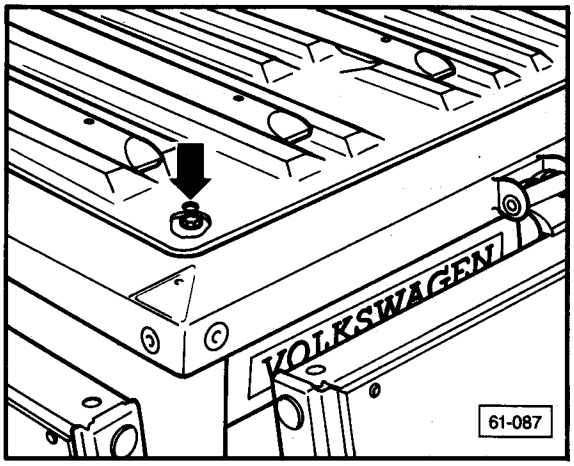

— drill two 10 mm (3/8 in.) diameter holes, one at each dimple located at rear corners of load platform (**arrow**)

CAUTION

Drill carefully through floor plate and do not damage captive nuts underneath. Touch up drilled holes, apply corrosion protection as required.

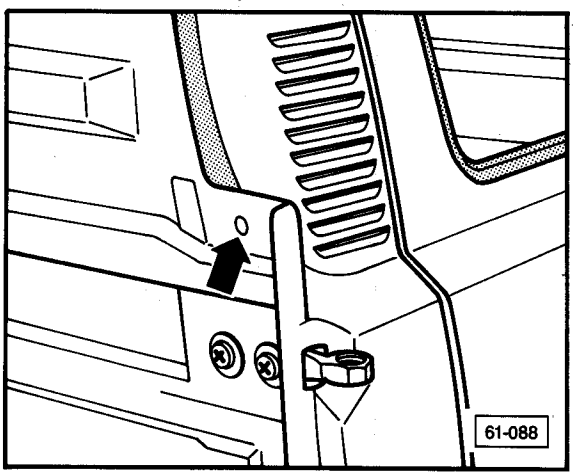

— drill 8.5 mm (21/64 in.) diameter holes at dimples in each side of cab rear panel (**arrow**)

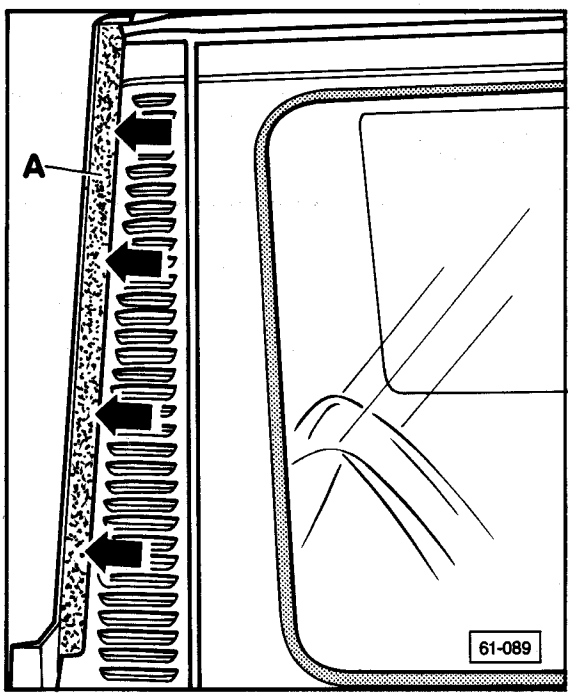

— clean rain channel (**arrows**) and stick sealing strip **A** in position

— remove plastic plugs from holes at each front corner of load platform

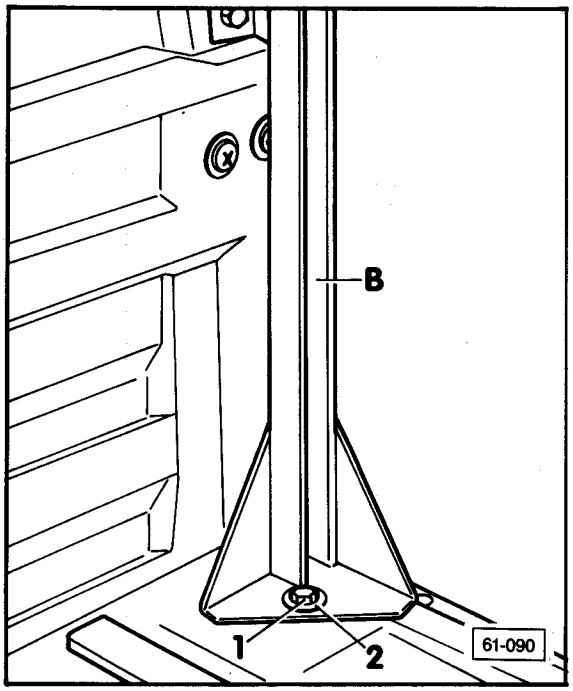

— mount rail **B** at front corner and fasten securely to floor with bolt **1** and washer **2**

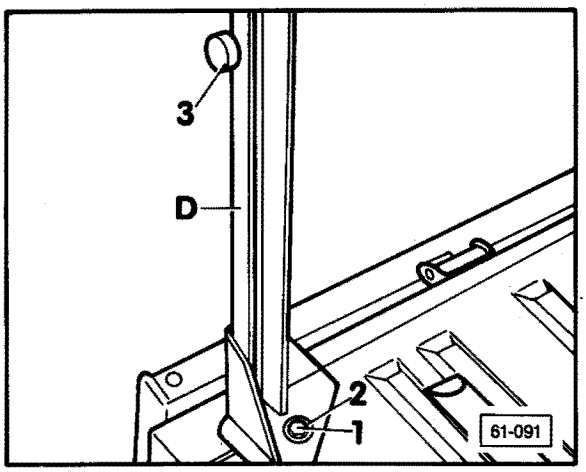

— mount rear rail to floor with bolt **1** and washer **2**
— press rubber buffers **3** into both sides of rail **D**

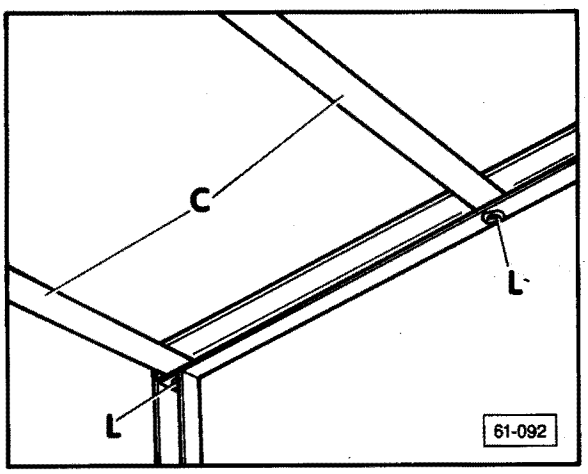

— mount longitudinal rails **C** in position and fasten to front and rear rails with countersunk screw and nut **L**

Note

Upon reassembly after dismantling frame, countersunk screws are to be installed with D6 locking compound.

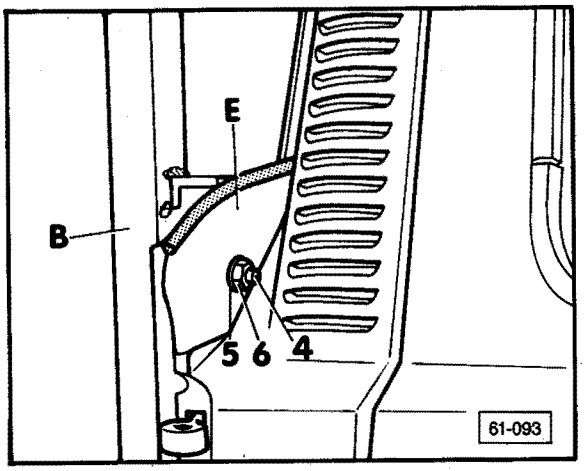

— install deflector plate **E** in position and securely fasten to rail **B** and cab rear panel with bolt **4**, washer **5** and nut **6**
— mount and align tarpaulin on frame starting at rear

Note

Three mechanics are required to install tarpaulin.

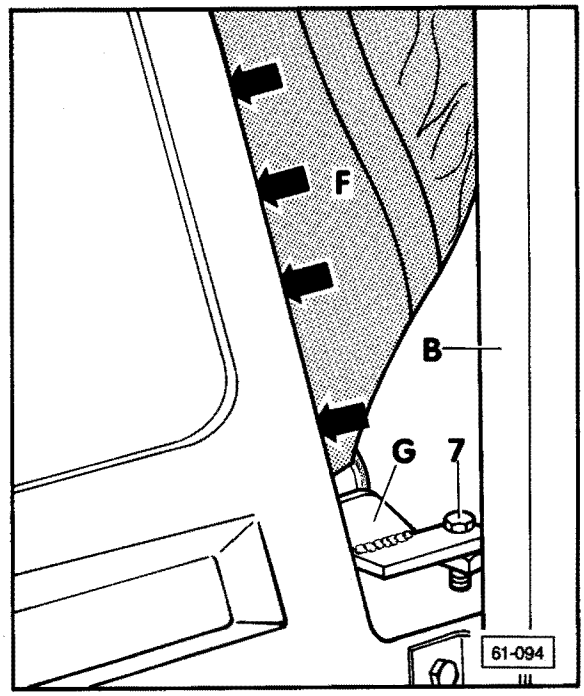

— fasten tarpaulin frame **G** to rail **B** at front with bolt **7**

Note

The tarpaulin frame must seal tightly in the rain channel (**arrows**).

Tailboard bump stops which do not line up with the tarpaulin can be removed and the holes plugged.

Bumpers

Quick Data

Index

– Front bumper/spoiler
removing/installing 63.2
– Rear bumper
removing/installing 63.3

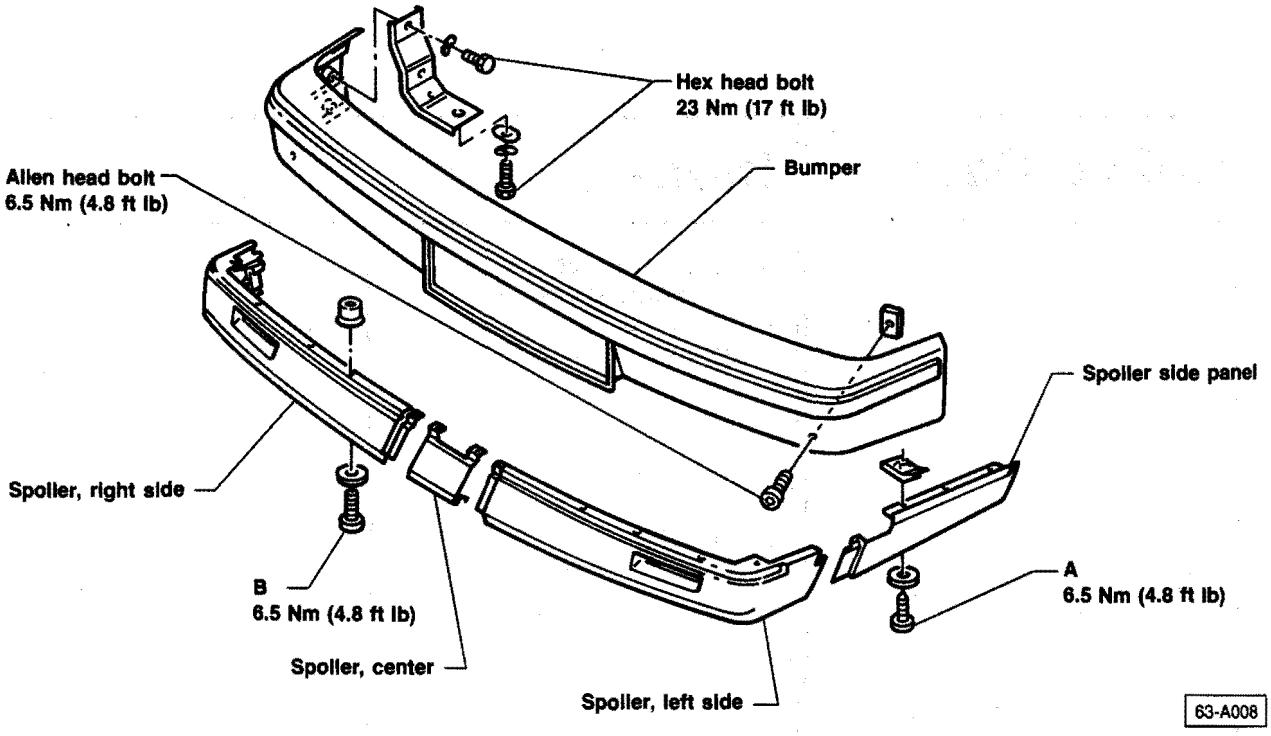

Front bumper/spoiler, removing

— remove screws **A** from spoiler side panels
— remove right and left spoiler side panels
— remove screws **B** from right, and left spoiler sections
— remove right, left and center spoiler sections
— remove hex head and allen head bolts
— remove bumper by pulling straight from body

Front bumper/spoiler, installing

— install all components in reverse order of removal

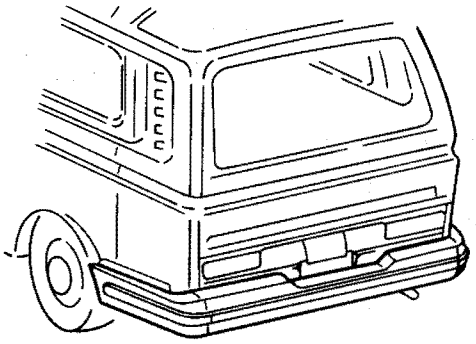

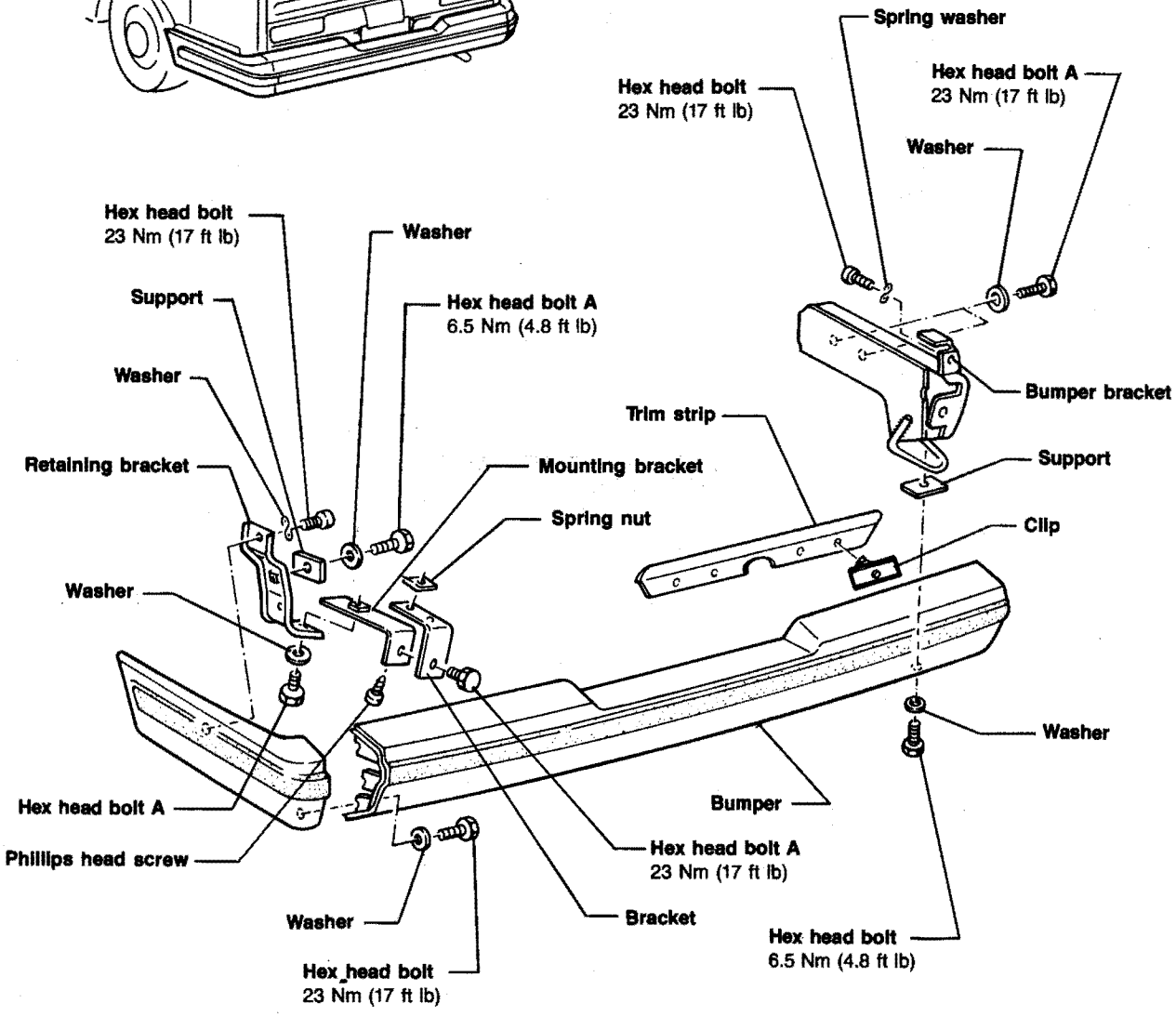

Rear bumper, removing

— remove hex head bolts **A** with washers from both sides
— remove bumper by pulling straight from body

Rear bumper, installing

Reinstall all components in reverse order of removal, noting the following:
— place bumper first into position, tighten bolts slightly
— align bumper, and fully secure all bolts

Index

—Sliding window
replacing guides 64.2

From 1986 M.Y.
—Glueing rubber window seals
side window 64.4
sliding door window 64.5
rear lid window 64.5
windshield 64.3
—Power window motor
removing 64.6, 64.7
installing 64.7

Sliding window guides, replacing

Note

If the nylon sliding window guides are loose in the window track channel, guide pieces, Part No. 281 847 723, can be installed as follows:

Work sequence

— remove sliding window interior latch
— remove outer window channel weatherstrip/seal
— lift sliding window up and remove loose guide piece

— lightly sand surfaces of guide piece and window channel to be glued
— clean out window channel with cleaning solvent



— glue replacement guide piece using 3M® brand structural adhesive or equivalent two-part epoxy
— reinstall window channel weatherstrip/seal
— reinstall interior latch

Note

Mechanically fastened guides were introduced during 4/85 production. These new guides cannot be retrofitted on earlier models.

CAUTION

Part numbers are for reference only. Always consult your Parts Department for latest information

With start of production M.Y. 1986, the rubber seals for the windshield, side windows and rear lid are glued into place.

Note

To insure a satisfactory seal, use adhesive AMV 172 003 05 or equivalent specifically made for EPDM rubber.

Windshield seal, removing

Work procedure

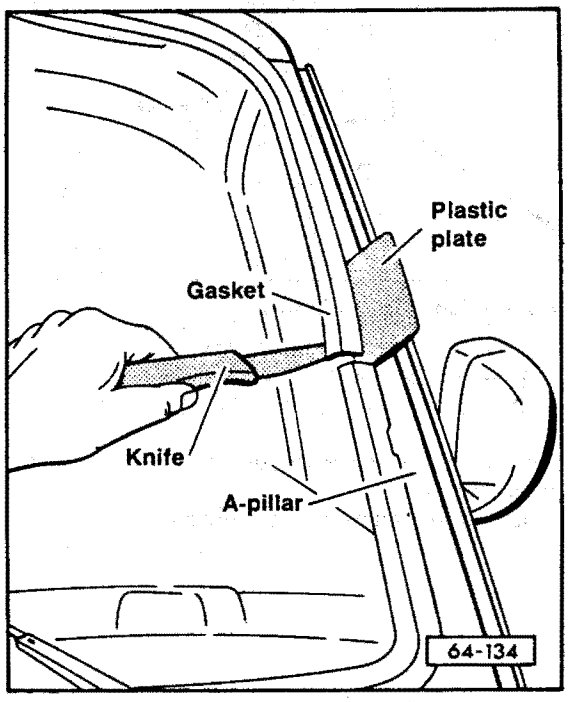

— carefully remove trim strip, if applicable, from rubber gasket
— cut through seal at area of **A-pillar** (as shown)

CAUTION

Prevent paint damage by placing piece of flat plastic (as shown) between seal and body.

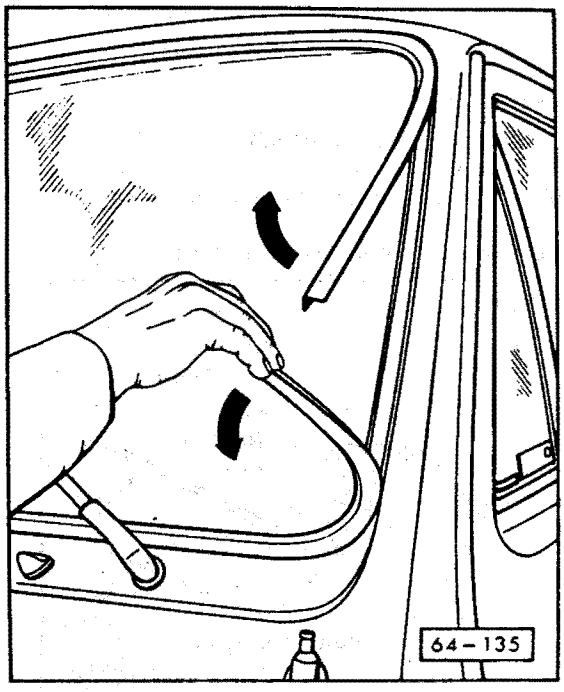

— pull seal from flange and window glass
— from outside place suction cups on glass and remove windshield
— with plastic wedge remove rest of rubber seal and remaining adhesive to height of 1-2 mm (3/64-5/64 in)

Note

If paint has been damaged, repair before installing new rubber seal.

Installing

Work procedure

— reinstall trim strip, if applicable
— install seal on glass
— place plastic cord for installing window into seal lip
— clean sealing area around window opening

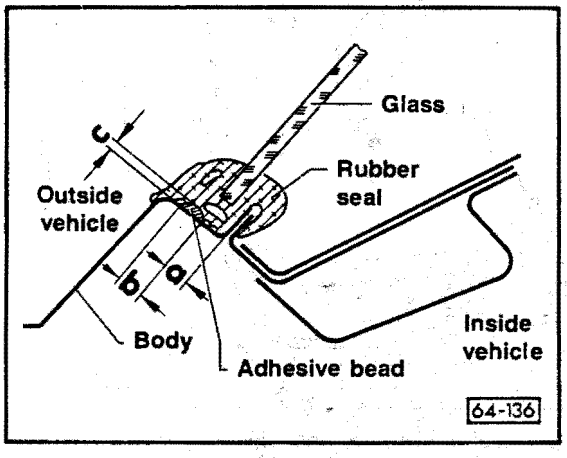

Cross section - Windshield

A = 7 – 2 mm (9/32 – 5/64 in)
B = 7 – 2 mm (9/32 – 5/64 in)
C = 3 + 1 mm (1/8 + 3/64 in)

— place bead of adhesive as shown
— reinstall windshield, checking for proper fit

Side window seal, removing/installing

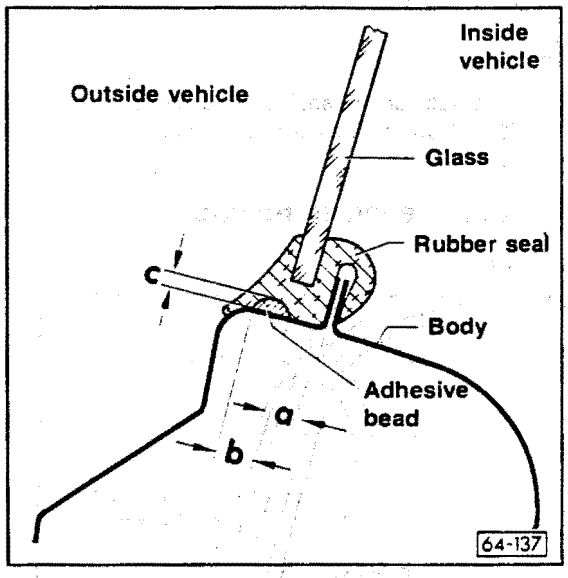

Cross section - Side window

A = 7 – 2 mm (9/32 – 5/64 in)
B = 7 – 2 mm (9/32 – 5/64 in)
C = 3 + 1 mm (1/8 + 3/64 in)

— removal/installation procedure is identical to that of windshield
  • note proper placement of adhesive bead

Rear lid window seal, removing/installing

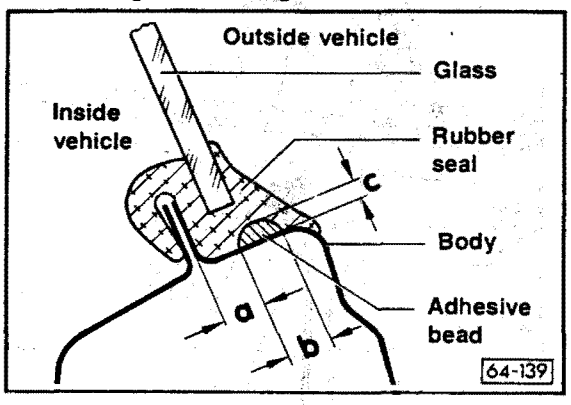

Cross section - Rear lid window

A = 7 – 2 mm (9/32 – 5/64 in)
B = 7 – 2 mm (9/32 – 5/64 in)
C = 3 + 1 mm (1/8 + 3/64 in)

— removal/installation procedure is identical to that of windshield seal
- note proper placement of adhesive bead

Sliding door window seal, removing/installing

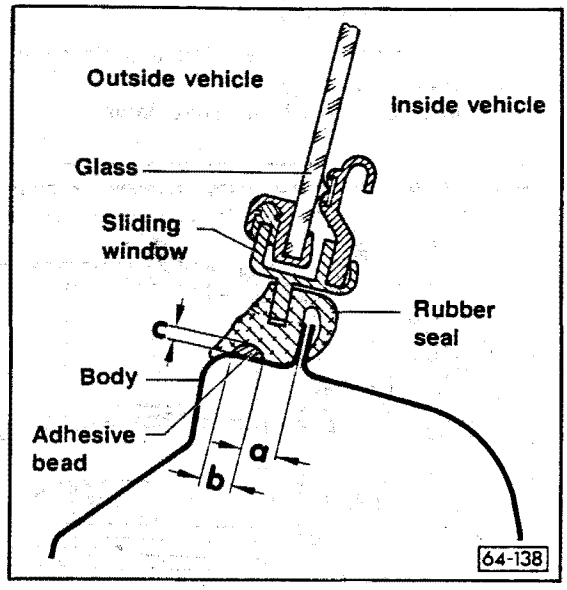

Cross section - Sliding door window

A = 7 – 2 mm (9/32 – 5/64 in)
B = 7 – 2 mm (9/32 – 5/64 in)
C = 3 + 3 mm (1/8 + 1/8 in)

— rémoval/installation procedure is identical to that of windshield
- note proper placement of adhesive bead

Note

The dimension of adhesive bead ensures no adhesive will get into interior of vehicle. Any excess adhesive must be cleaned off **immediately** with suitable solvent such as 3M ® General Purpose Adhesive Cleaner or equivalent.

Adhesive material hardening times

After repairs, vehicle should not be exposed to temperatures below 0ºC (32ºF) for 12 hours before being driven.

Power window motor, removing

— fully raise door window glass
— disconnect battery ground strap
— remove door trim panel

— disconnect electrical connectors and press out window operating switch
— carefully pull off plastic moisture barrier

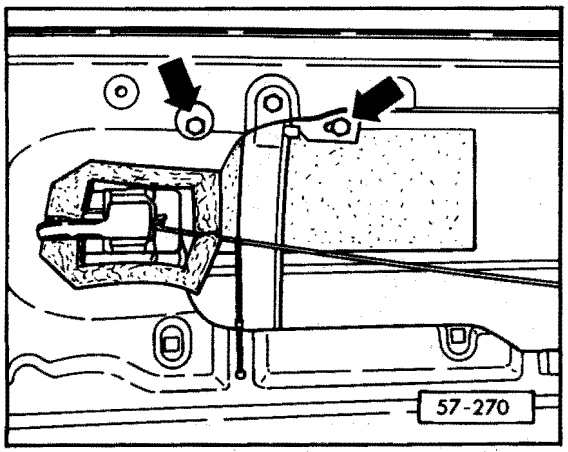

— reconnect window operating switch
— temporarily reconnect battery ground strap
— lower glass sufficiently to remove two hex head bolts (**arrows**) from regulator

CAUTION

Always use care and wear protective gloves for safety to prevent injury if glass breaks.

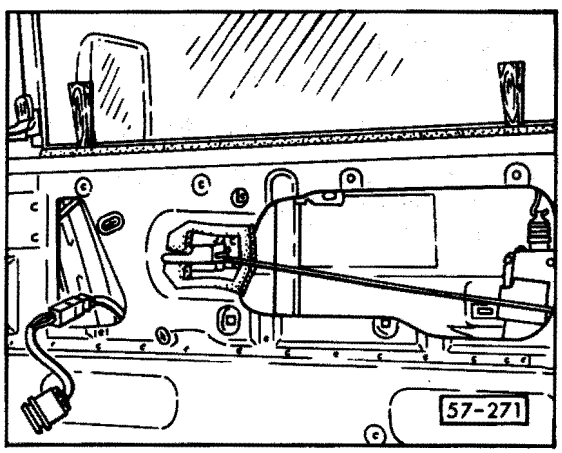

— fully push up glass and secure with wooden wedges (as shown)

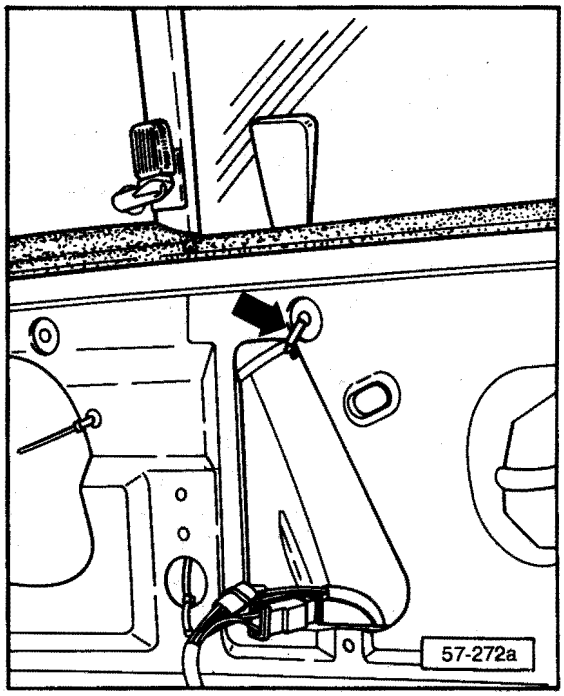

— disconnect battery ground strap
— cut off tie-wrap for cable guide (**arrow**)
— disconnect window operating switch

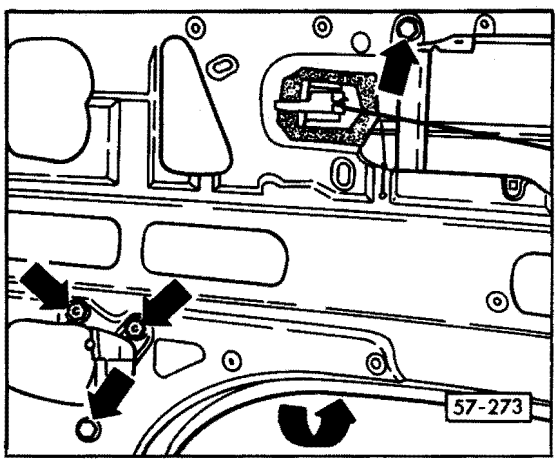

— remove window regulator fasteners (**arrows**)
— push window guide rail toward outside of door with one hand

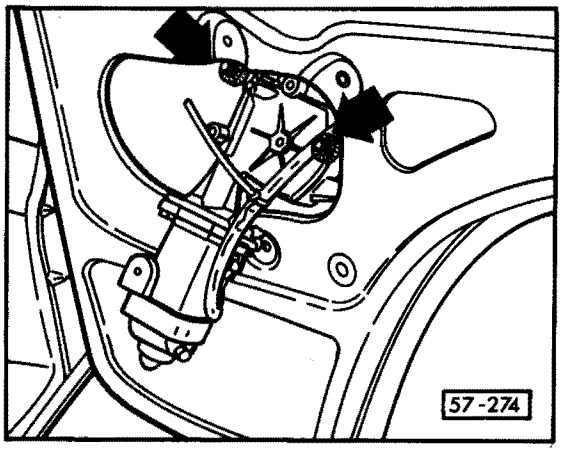

— while holding window guide, proceed to withdraw electric motor (as shown)
- this position will allow threaded bolts to clear door assembly (**arrows**)

CAUTION

Do not apply excessive force. Plastic cable guides may break.

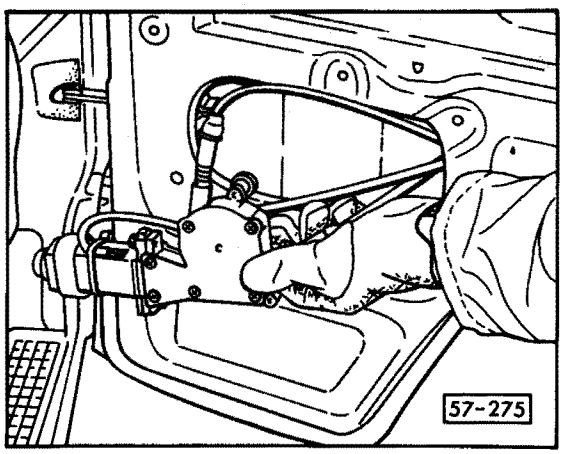

— turning electric motor 180° (as shown) remove window regulator through assembly hole in door shell
- electric motor and cables are **one** unit

Power window motor, installing

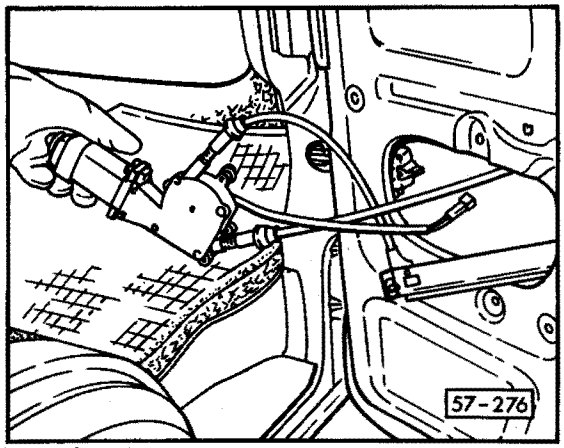

— guide window motor assembly into door shell (as shown)

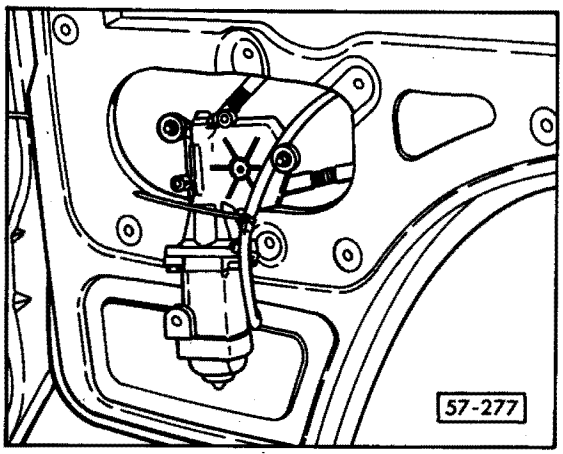

— turn and place electric motor into position (as shown)
— remount electric motor, guide rail and window glass
— push window operating switch

— replace tie-wrap for cable guide
— temporarily reconnect battery ground strap and window operating switch
— check window for proper functioning
— disconnect battery ground strap and window operating switch

— starting at top, carefully reinstall plastic moisture barrier, noting
- replace if damaged
- ensure adhesive areas are clean
- ensure installed wrinkle free

— reinstall all electrical connectors and window operating switch
— reinstall door trim panel
— reconnect battery ground strap

— check window for proper functioning

Body Accessories Exterior

Index

– Body side moldings
  assembly 66.5
  bracket locations 66.6, 66.7
  removing/installing 66.7
– Mirror glass
  increasing mirror glass adjustment range 66.3
  removing/installing 66.2
– Outside mirrors, electric
  assembly 66.4
  removing/installing 66.4

Mirror glass, removing

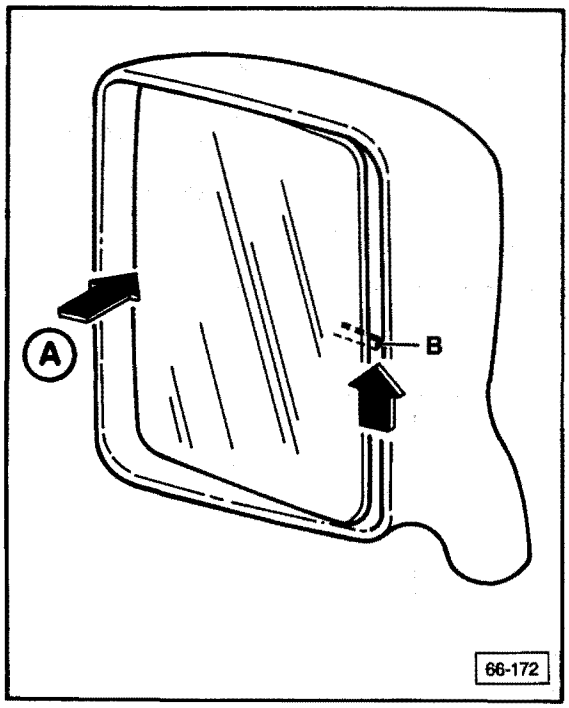

CAUTION

Wear protective gloves to prevent injury if glass breaks.

Hold glass to prevent falling out.

— push mirror glass at outer edge **A** until locking lever **B** is accessible
— push locking lever **B** (**arrow**) counterclockwise to unlatch mirror assembly
— tilt and remove mirror glass
— disconnect electric heater element

Mirror glass, installing

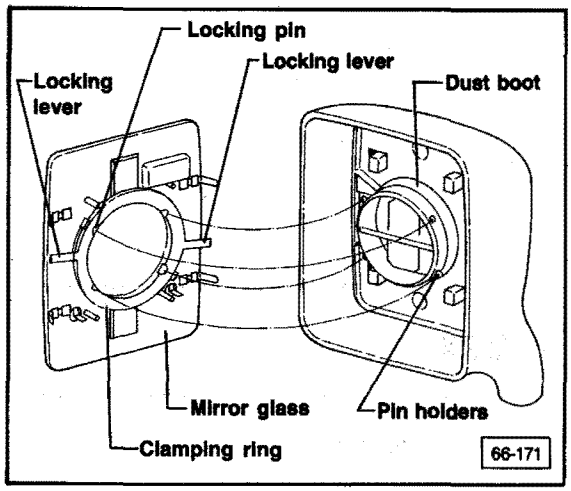

Installation is in reverse order:
— ensure dust boot is properly seated
— locking pins must be engaged in pin holder
— check mirror for proper function

Increasing mirror glass adjustment range

The mirror glass adjustment range for electric outside mirrors can be increased by shortening the four stop tabs on the mirror drive motor mounting plate.

Note

See page 66.2 for mirror glass removal/installation work procedure.

Mirror drive plate stop tabs, removing

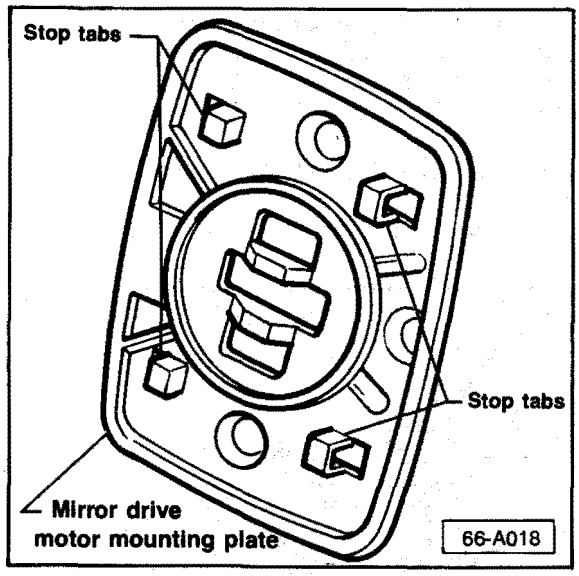

— disconnect battery ground strap
— remove mirror glass
— remove mirror drive motor
— unscrew and remove mirror drive motor mounting plate

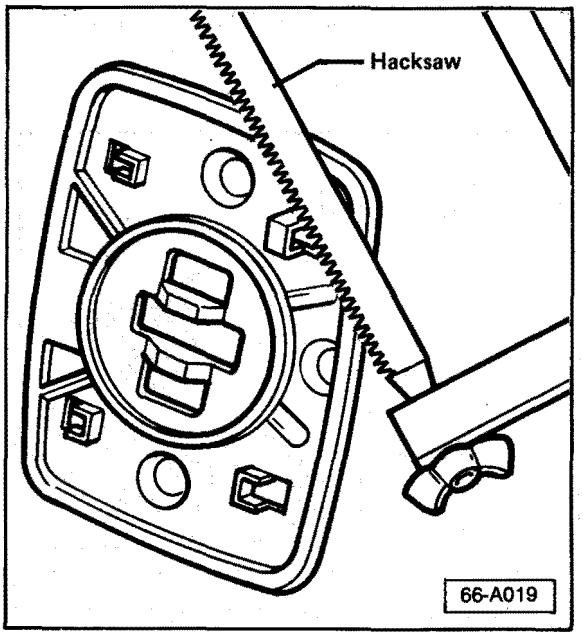

— using hacksaw, cut 3-4mm (7/64-11/64 in.) from all four stop tabs
— install all mirror components in reverse order
— reconnect battery ground strap
— check mirror for proper functioning

Electric mirror assembly, removing

— disconnect battery ground strap

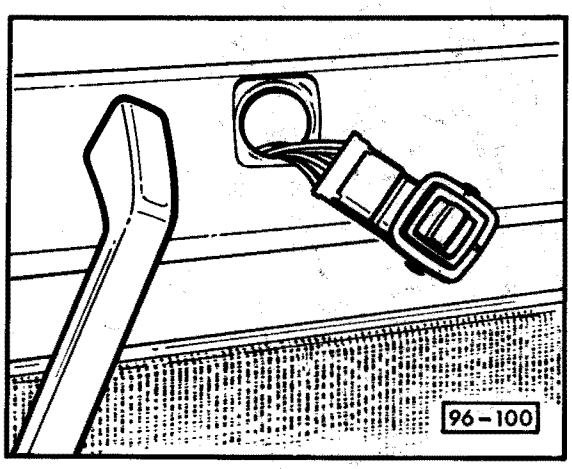

— pry out disconnect electric mirror switch from door trim panel
— remove door trim panel
— carefully pull back plastic moisture barrier

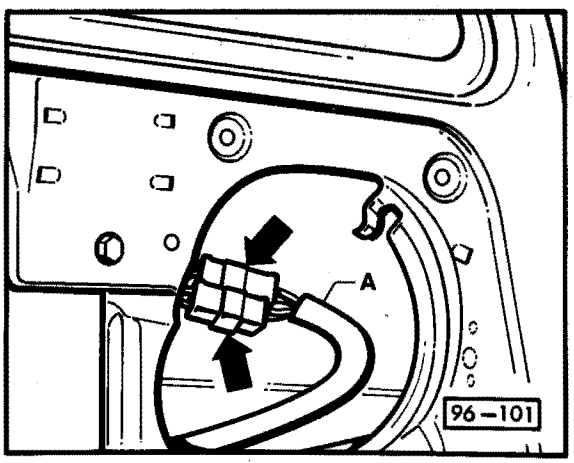

— cut tie wraps holding wire harness to door
— cut open cable sleeve **A** to expose individual wires
— label and remove mirror wires from plug connector

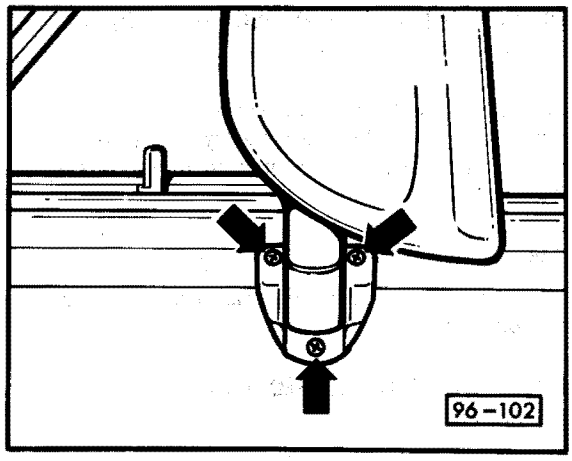

— pry off plastic cap at base of mirror bracket and remove three screws (**arrows**)
— remove mirror assembly together with wire harness

Electric mirror assembly, installing

— reinstall all components in reverse order, noting:

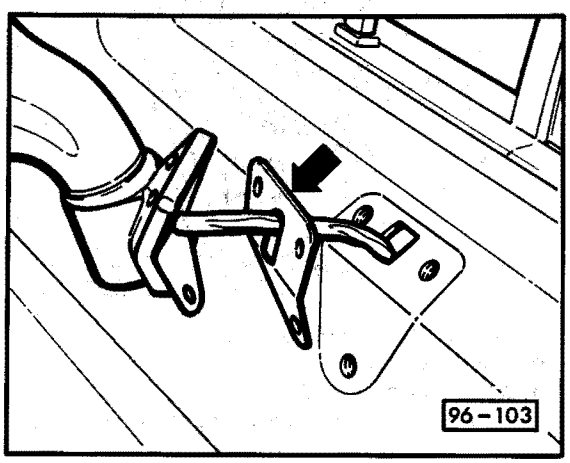

— position seal (**arrow**) to proper fit
— secure wire harness to door frame with tie wraps
— check mirror for proper function

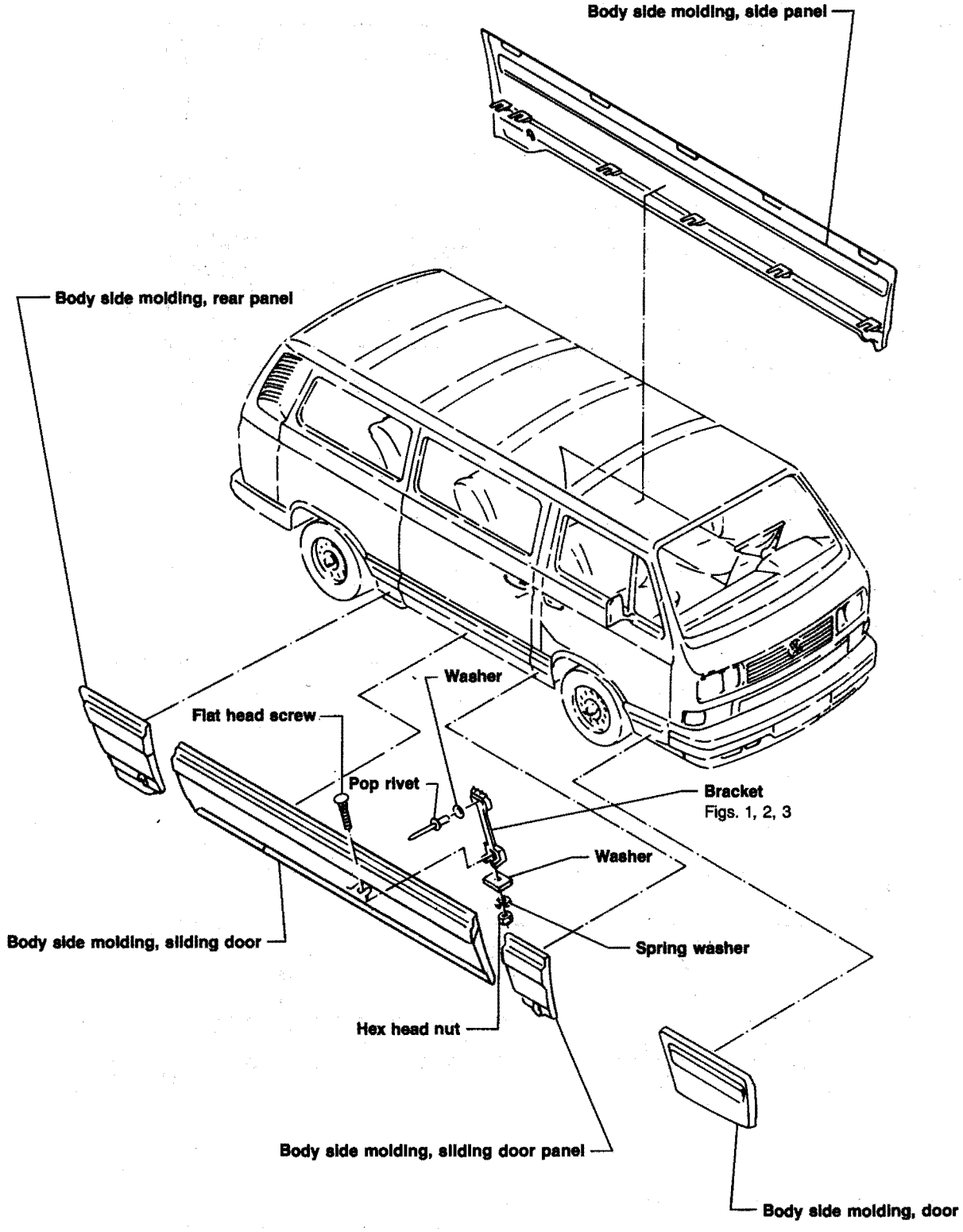
Body side molding, side panel
Body side molding, rear panel
Washer
Flat head screw
Pop rivet
Bracket
Figs. 1, 2, 3
Washer
Body side molding, sliding door
Spring washer
Hex head nut
Body side molding, sliding door panel
Body side molding, door
66-226

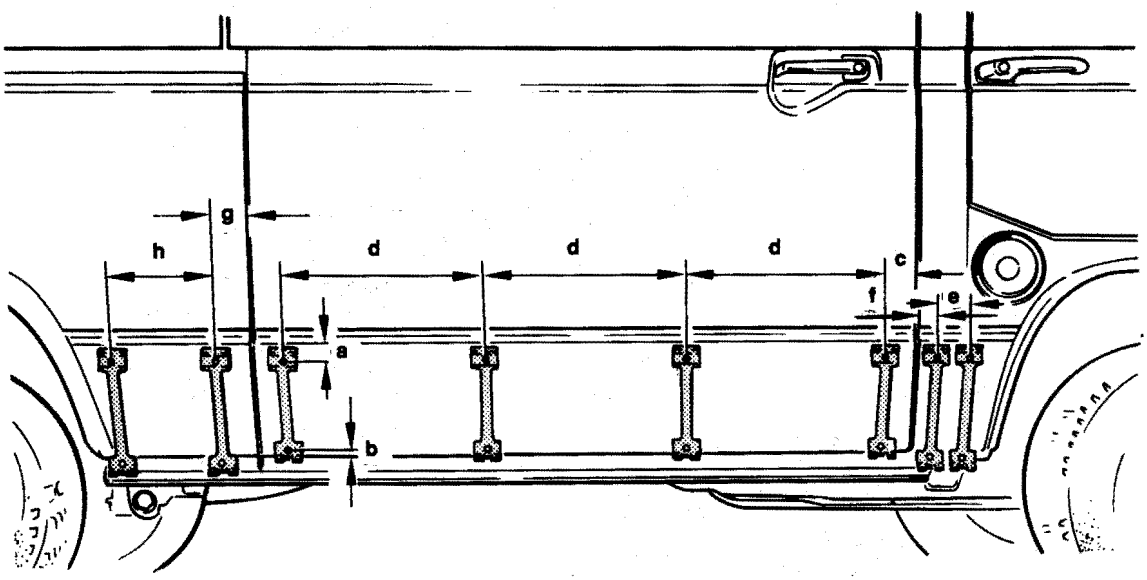

66-228

Fig. 1 Body side molding bracket locations, sliding door

a — 30 mm (1.2 in.)
b — 15 mm (19/32 in.)
c — 53 mm (2.1 in.)
d — 365 mm (13.2 in.)
e — 60 mm (2.3 in.)
f — 33 mm (1.3 in.)
g — 65 mm (2 1/2 in.)
h — 180 mm (7.0 in.)

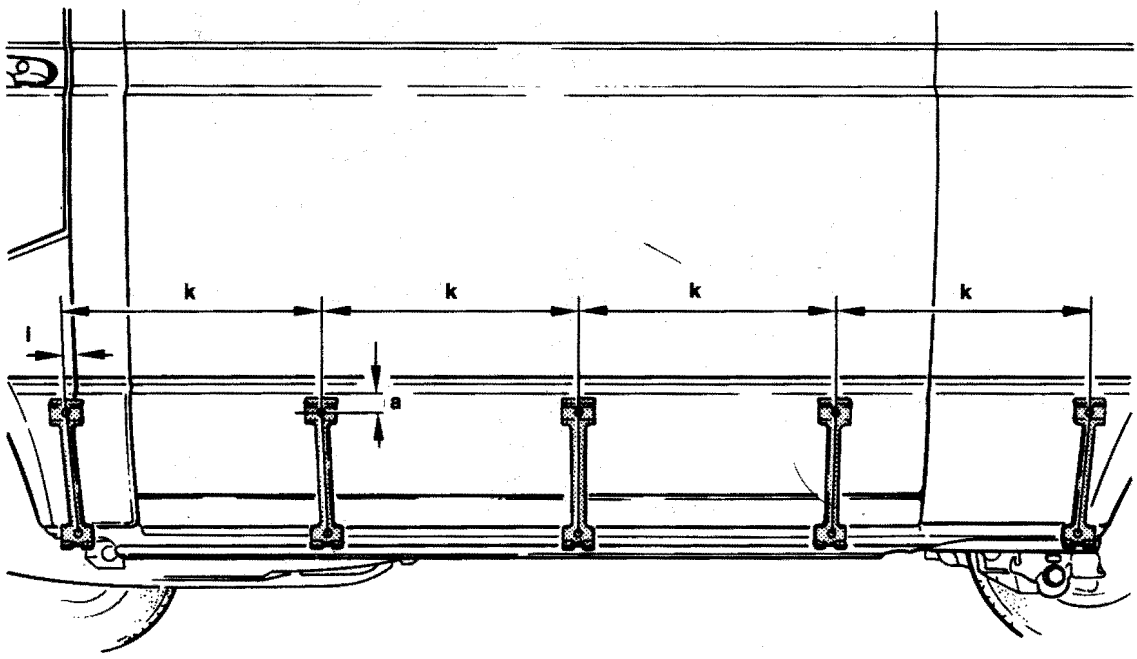

66-228a

Fig. 2 Body side molding bracket locations, side panel

a — 30 mm (1.2 in.)
i — 10 mm (25/64 in.)
k — 390 mm (15.2 in.)

CAUTION

De-burr, touch-up and apply anti-corrosion primer to bored holes in body as required.

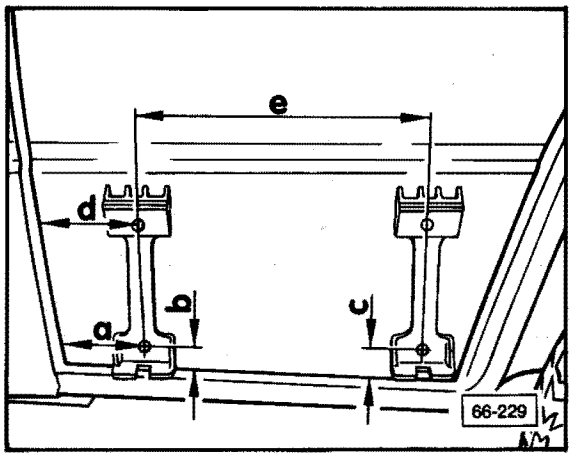

Fig. 3 Body side molding bracket locations, front doors

a — 70 mm (2.7 in.)
b — 25 mm (63/64 in.)
c — 35 mm (1.4 in.)
d — 80 mm (3.1 in.)
e — 226 mm (8.8 in.)

CAUTION

De-burr, touch-up and apply anti-corrosion to bored holes as required.

Body side moldings, removing

— loosen hex head nuts

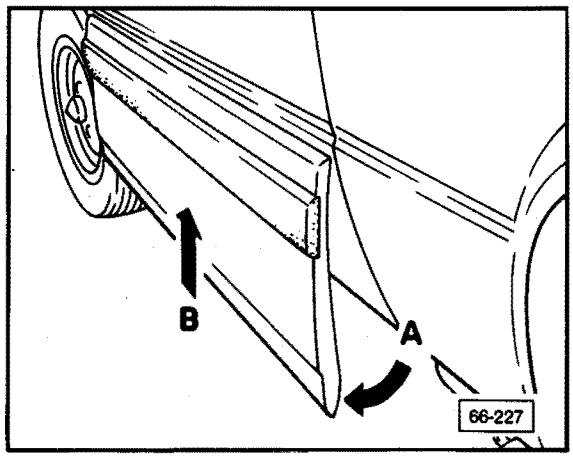

— swing molding outward (**arrow A**)
— remove molding from top (**arrow B**)

Body side moldings, installing

Reinstall all components in reverse order of removal.

Index

— Automatic 3-point seat belts
retrofit installation 68.5
— Automatic rear 3-point seat belts
retrofit installation 68.7
— Automatic 3-point left center
seat belt
retrofit installation 68.10
— Illuminated vanity mirrors
replacing bulbs 68.13
— Seat belts
inspection 68.2
webbing defects 68.4
— Template measurements 68.6

Complete seat belt system

Note

A visual and functional inspection of seat belts is recommended to assure maximum protection for vehicle occupants.

> **CAUTION**
>
> Seat belt assemblies must be replaced after being subjected to loading by occupants in a collision.

The following inspection is described separately for front, rear and center seat belt positions. It includes all continuous loop, single retractor 3-point restraint systems, 2-point automatic (passive) front seat restraint systems, and all non-retractable belt systems.

System inspection, front seat

Webbing inspection

— check for twisted webbing due to improper alignment when connecting buckle
— fully extend webbing from retractor. Inspect webbing and replace with new assembly if following conditions are noted:

- cut or damaged webbing
- broken or pulled threads
- cut loops at belt edge
- color fading as a result of exposure to sun or chemical agents
- bowed webbing

see page 68.4 for examples of webbing defects

> **CAUTION**
>
> Do not bleach or redye seat belt webbing. Webbing that is severely faded will not meet strength requirements and must be replaced.
>
> Belt assemblies must be installed in sets. Do not interchange buckle and retractor assemblies with those designated for other seating positions or other car models.

If webbing cannot be pulled out of retractor or will not retract to stowed position, check for the following conditions and clean or correct as necessary:

- dirty webbing coated with gum, syrup, grease or other foreign material
- twisted webbing
- retractor or loop on B-pillar out of position

Cleaning

Clean the belt webbing only with a mild soap solution recommended for cleaning upholstery or carpets. Follow the instructions provided on soap container.

Buckle inspection

— insert tongue of seat belt into buckle until audible click is heard. Pull back on webbing quickly to assure buckle is latched properly
— replace seat belt assembly if buckle will not latch

— depress button on buckle to release belt
  - belt should release with a pressure of approx. 2 lbs.
— replace seat belt assembly if buckle cover is cracked, push button is loose or pressure required to release buckle is too high

Retractor inspection

Front retractors are dual sensing and will lock up in two modes. The unit will lock up as the belt is being withdrawn from the retractor if the inertia increases dramatically. Also, the unit will lock up with a change in vehicle motion such as rapid braking.

— grasp seat belt webbing and, while pulling from retractor, give belt a fast jerk

Note

For automatic belt vehicles this mode is difficult to inspect due to a low setting of the inertia unit.

— drive vehicle in an open area away from other vehicles at a speed of approx. 5 to 15 mph and quickly apply footbrake

— if retractor does not lock up under these conditions, remove and replace seat belt assembly

Note

A passenger can be used to test the right hand retractor. The driver alone can test both retractors simultaneously by grasping the right hand webbing, extracting approx. 26 inches from the retractor and holding the belt while braking.

Seat belt warning light/buzzer

A light in the instrument panel displaying the words "fasten seat belts" or "fasten belts" along with an audible signal that lasts for four to eight seconds should be noticed when the ignition switch is moved to the "on" or "start" position and the drivers belt is unlatched. If the driver's belt is latched the buzzer should not activate.

For 2-point automatic belts, both belts must be connected to the door in order to start the vehicle. The "fasten belts" light should activate if either automatic belt is disconnected after starting.

Note

Correct any malfunctions in this system if the customer desires.

Anchorage inspection

Seat belt mounting bolts are installed at 35.3 Nm to 47.0 Nm (20 to 35 ft lb). Retractors must be securely anchored in place. The bolts at the lower belt anchor point (not the retractor) and upper seat belt loop must be tight and still allow the hardware to swivel. Anchorage areas must be sound and uncorroded.

Note

Reinforce bolt mounting area if necessary.

System inspection, rear seat

Webbing/buckle inspection

same as for front seat

Retractor inspection

Rear seat retractors lock automatically when the webbing is extended and allowed to feed back into the retractor.

— check retractor by extending webbing and fastening to buckle. Allow several inches to feed back into retractor and then jerk belt sharply
— if retractor does not lock up, remove and replace seat belt assembly

Lap and shoulder belts (rear seat)

The 3-point system for the rear seat is the same as for front seat except for the light and buzzer warning system.

Anchorage inspection

same as for front seat

Center seat position (and non-retractable belts)

Some models have a rear center seat belt. These belts do not have a retractor. In addition to checking the webbing and anchorages, the adjustable slide locking of the belt must be checked.

— fasten tongue to buckle and adjust by pulling webbing end at right angle to connector and buckle
— release webbing and pull upward on connector and buckle
— If slide lock does not hold, remove and replace seat belt assembly

Center seat position (retractable belts)

same as for rear seat retractor inspection

Examples of webbing defects

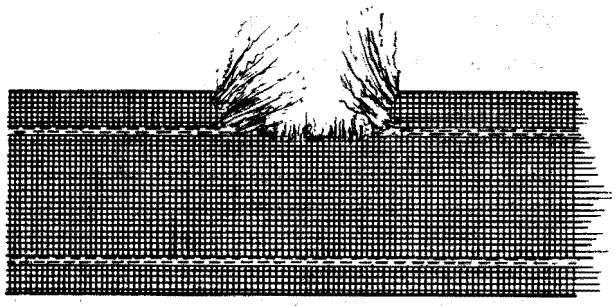

Cut or damaged webbing

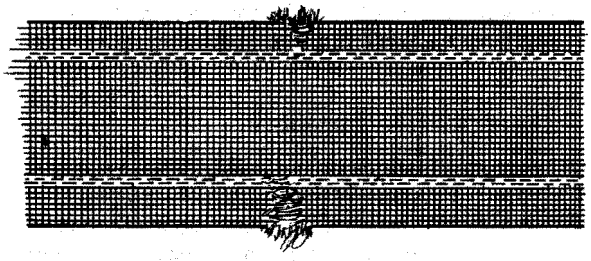

Cut loops at belt edge
(damage from being caught in door)

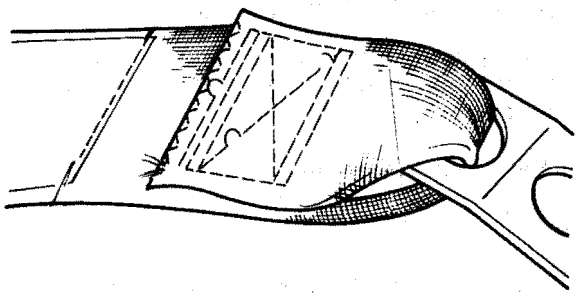

Broken or pulled threads

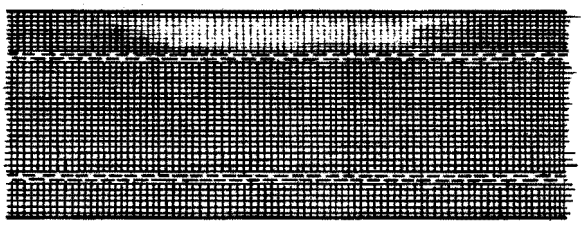

Color fading

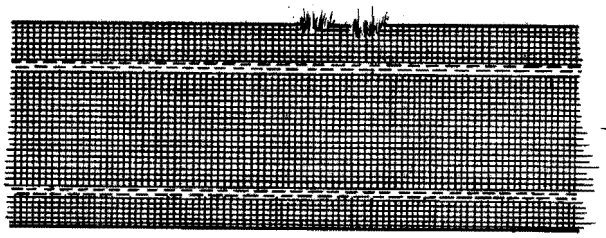

Cut loops at belt edge

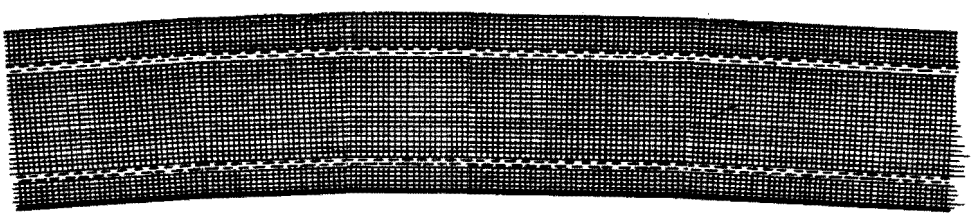

Bowed webbing

Automatic rear 3-point seat belts, Retrofit Installation

CAUTION

Always consult with the Parts Department for Part numbers.

— remove rear cushion and floor carpet
— remove rear seat bottom assembly

— remove rear seat back
— remove D-pillar trim
— remove left rear luggage area trim panel
— remove existing 2-point left/right side lap belt
— using template for luggage area trim panel, mark and cut hole in panel as shown
— using template for D-panel, mark and cut side of D-pillar for belt guide

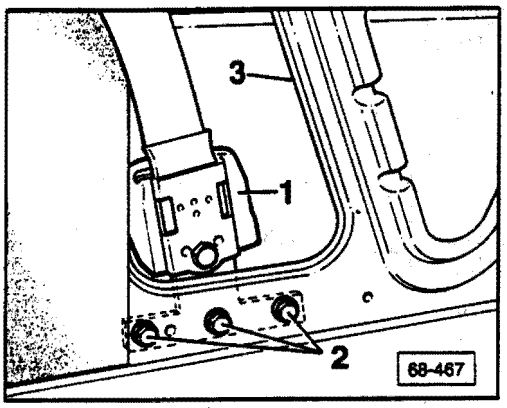

— using bolts 2, mount retractor assembly 1 to side panel 3
• 40 Nm (30 ft lb)

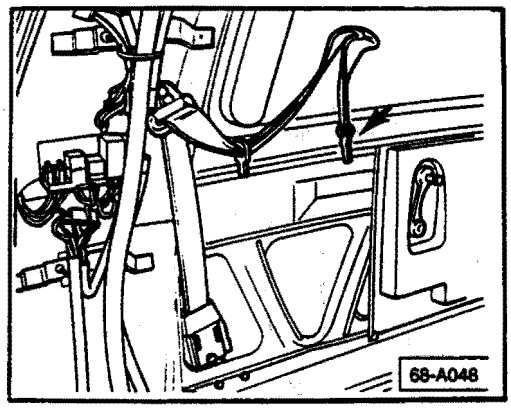

— install belt through cut hole in trim panel
— mount upper belt guide onto D-pillar
• 40 Nm (30 ft lb)
— install belt anchor (**arrow**) to original lap belt anchor point
• 40 Nm (30 ft lb)
— repeat procedure for right side belt assembly, noting to reverse template dimensions accordingly
— reinstall rear seat back and seat bottom assemblies
— replace both outer seatbelt buckles
— reinstall rear cushion and floor carpet
— check rear 3-point belts for proper function

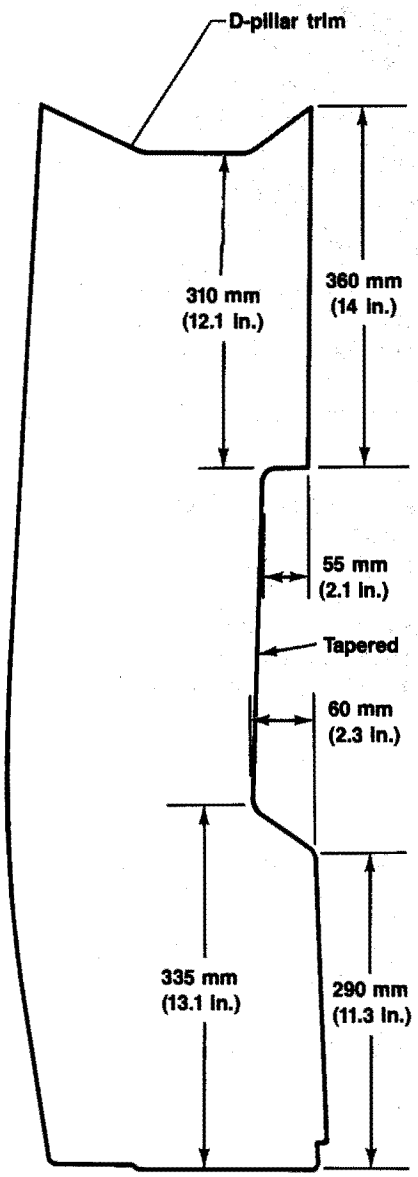

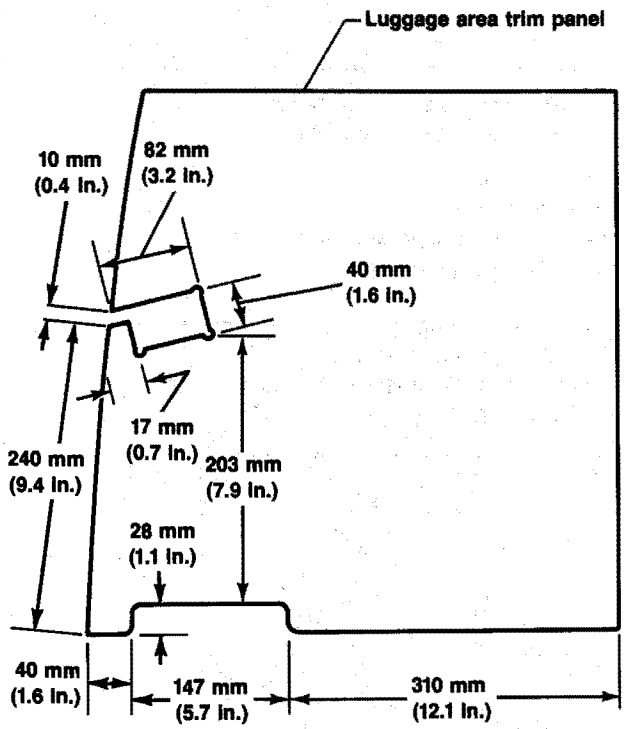

Vanagon only

From 1986 m.y. with A/C

Automatic rear 3-point seat belts, retrofit installation

CAUTION

Part numbers are for reference only. Always check with your Parts Department for latest information.

Parts required

Part Number	Description	Quantity
253 857 815D	Rear 3-point seat belt (left side)	1
253 857 816D	Rear 3-point seat belt (right side)	1

Note

Check with your Parts Department for additional installation parts. Not all parts listed may be applicable to all vehicles.

- remove rear seat bottom
- remove existing 2-point left/right side lap belt
- remove rear floor carpet
- remove right rear luggage area trim panel
- mark and cut rear luggage area trim panel using dimensions as shown on page 68.9
- locate, by feel, threaded hole under D-pillar trim (**arrow**)
- cut hole in trim to expose threaded bolt hole

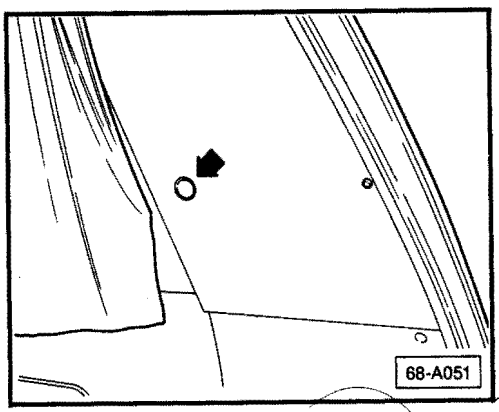

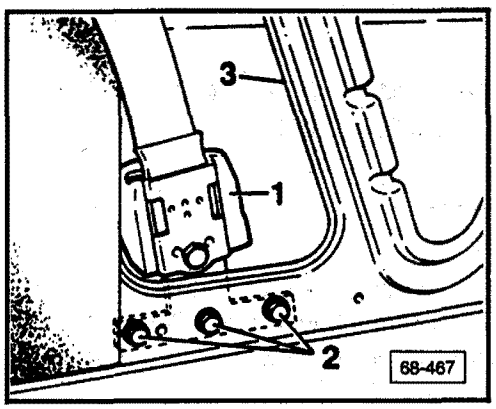

- using bolts **2,** mount retractor assembly **1,** to side panel **3**
  - 40 Nm (30 ft lb)
- install belt through cut hole in trim panel
- mount upper belt guide onto D-pillar
  - 40 Nm (30 ft lb)

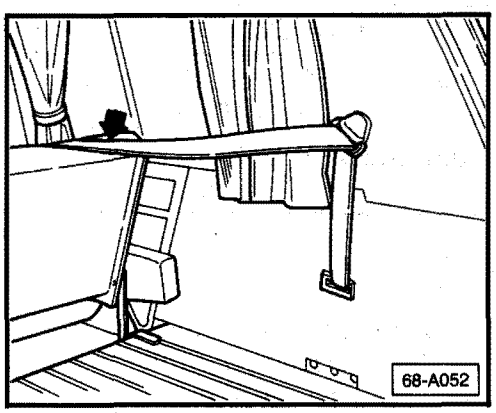

- install belt anchor (**arrow**) to original lap belt anchor point
  - 40 Nm (30 ft lb)
- reinstall right rear luggage area trim panel
- repeat procedure for left side belt assembly, noting to reverse dimensions accordingly
- reinstall all other components in reverse order
- check rear 3-point belts for proper function

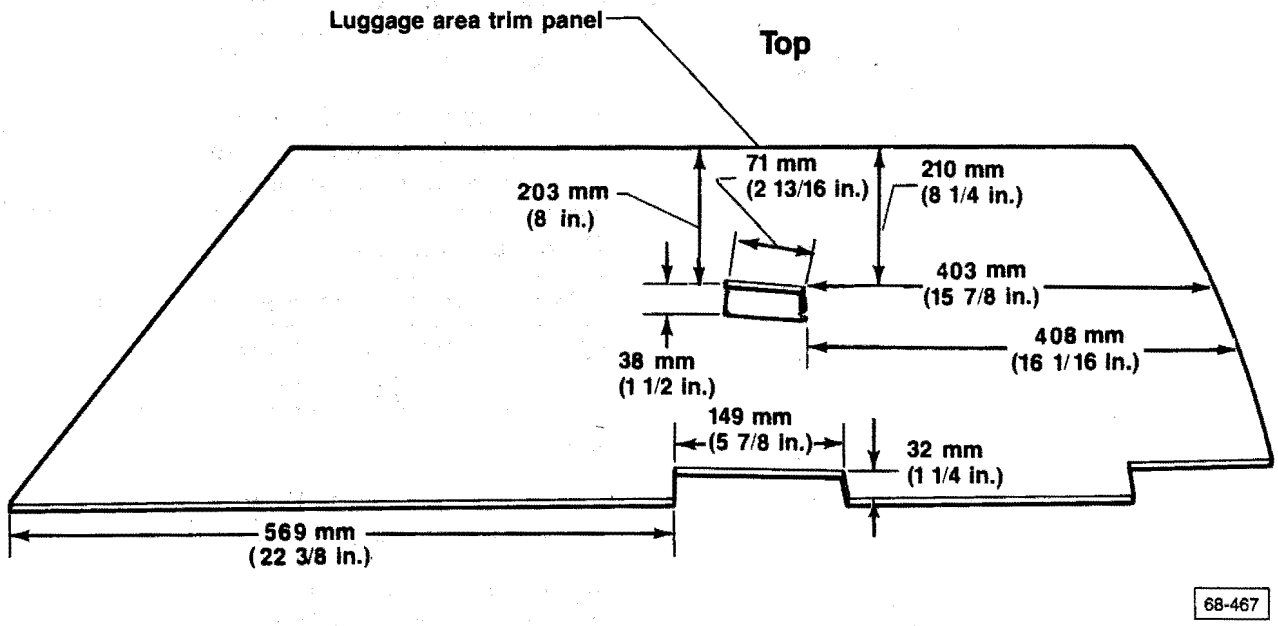

Front of vehicle

Automatic 3-point left center seat belt, retrofit installation

CAUTION

Part numbers are for reference only. Always check with your Parts Department for latest information.

Parts required

Part Number	Description	Quantity
253 857 811D	3-point seat belt (left side)	1

Note

Check with your Parts Department for additional installation parts.

- remove rear seat back
- remove rear seat bottom
- remove original left center belt
- remove rear left side panel trim
- measure location of belt retractor, belt guide, and mounting holes, using dimensions on page 68.12
- cut panel as required
- reinstall trim panel

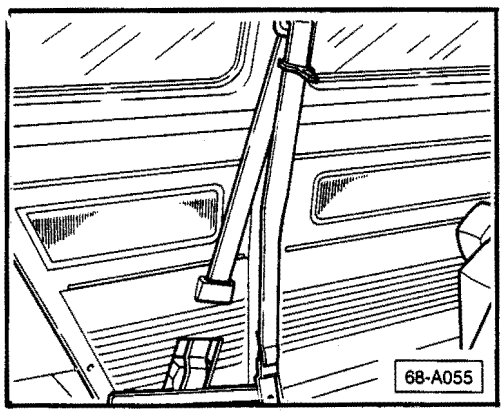

- install seat belt retractor on outside of panel, as shown
  - 40 Nm (30 ft lb)
  - hand tighten forward bolt only

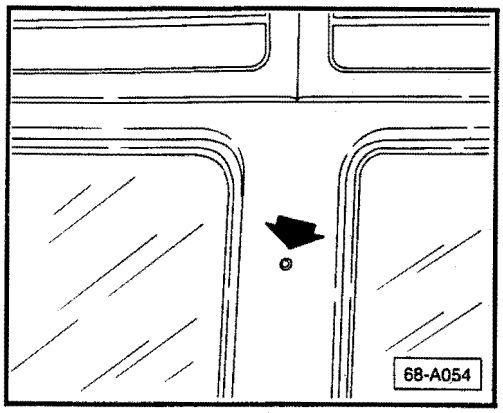

- locate, by feel, threaded hole in C-pillar (**arrow**) for belt guide D-ring
- cut C-pillar trim from threaded hole, install belt guide D-ring
  - 40 Nm (30 ft lb)

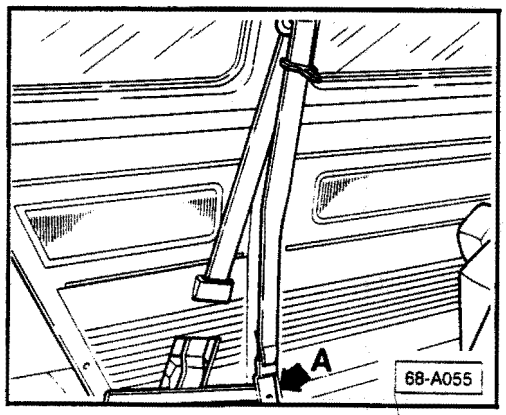

- install anchor of 3-point belt into forward mounting hole of retractor bracket (**arrow A**)
  - 40 Nm (30 ft lb)
- align bracket for belts, reinstall rear seat bottom and belts
- reinstall rear seatback
- install new buckle for 3-point belt
- check seat belt for proper function

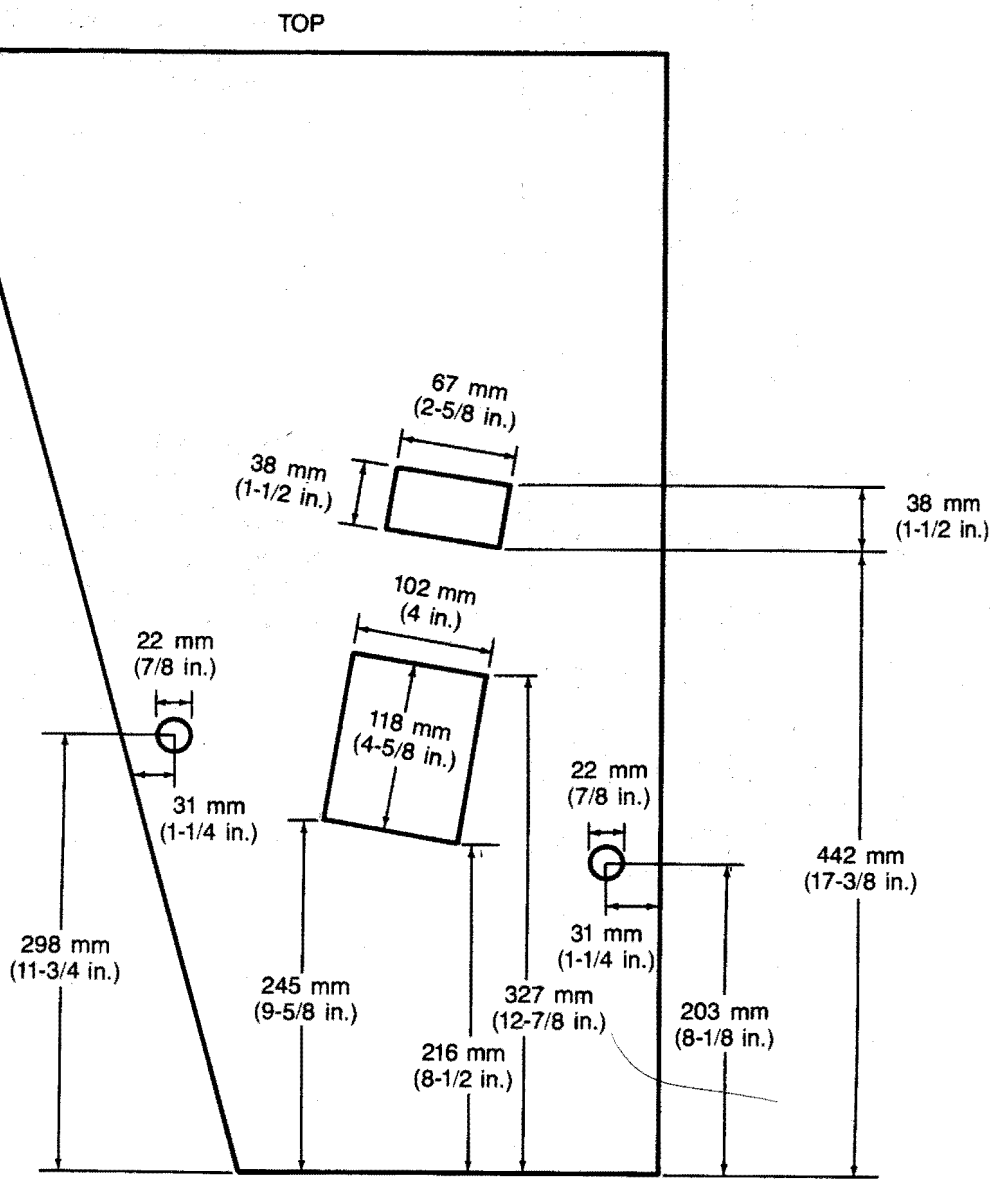

68.12 Automatic 3-point left center seat belt, retrofit installation

All w/center seat (except Camper/Multivan)
From 1980 m.y.

Illuminated vanity mirrors, replacing bulbs

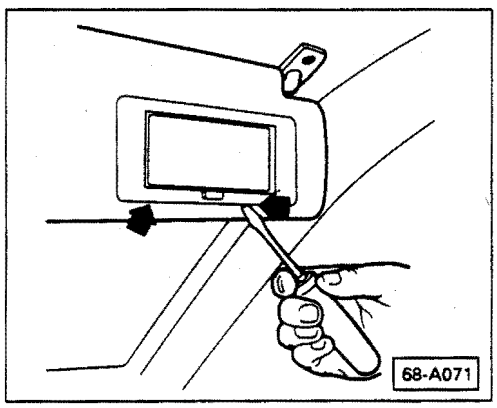

- locate clips under lower edge of vanity mirror assembly (**arrows**)
- carefully pry mirror assembly out of sunvisor with small flat bladed screwdriver (as shown)
- replace bulbs

Quick Data

Index

– Armrest, adjustable
assembly 72.5
removing/installing 72.6
– Armrest, fold down
removing/installing 72.4
– Front seat
removing/installing 72.2
– Front seat backrest
removing/installing 72.2, 72.3

Front seat, removing

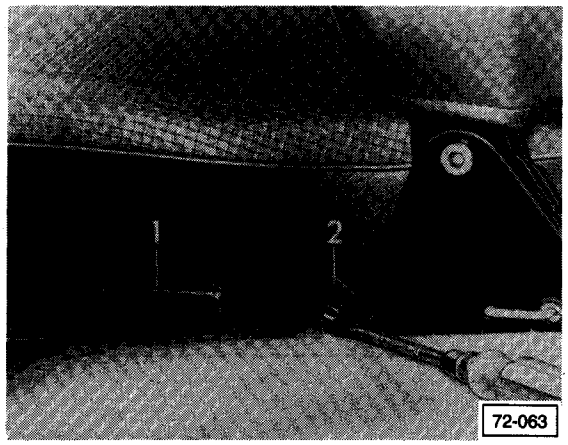

— pull front seat adjusting lever **1** upward and push seat forward
— pry locking lever **2** upward with screwdriver and push seat forward out of seat tracks

Front seat, installing

Reinstall all components in reverse order of removal, noting the following:
— check seat for proper function

Front seat backrest, removing

From 1980 — 1984 m.y.

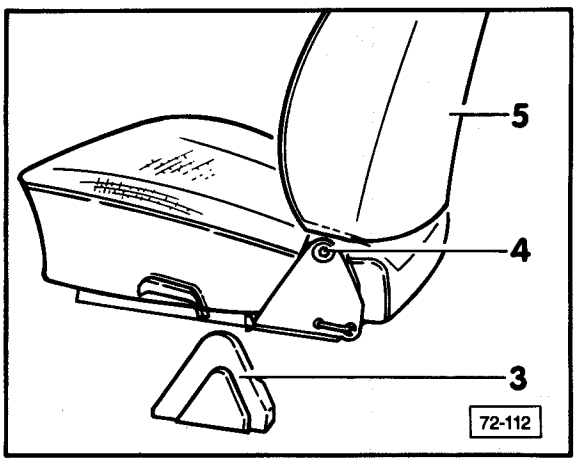

— pry off left/right cover caps **3**
— fold backrest **5** to front and lock
— remove socket head bolts **4** from both sides
— fold back backrest all the way back to horizontal
— pull off backrest **5**

Front seat backrest, installing

— insert backrest **5**, fold forward and lock
— reinstall socket head bolts **4**
— reinstall cover caps **3**

Front seat backrest, removing

From 1985 m.y.

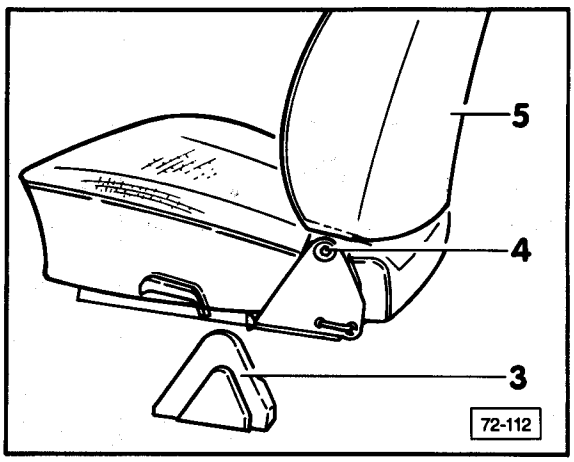

— pry off cover caps **3** from both sides
— remove socket head bolts **4** from both sides

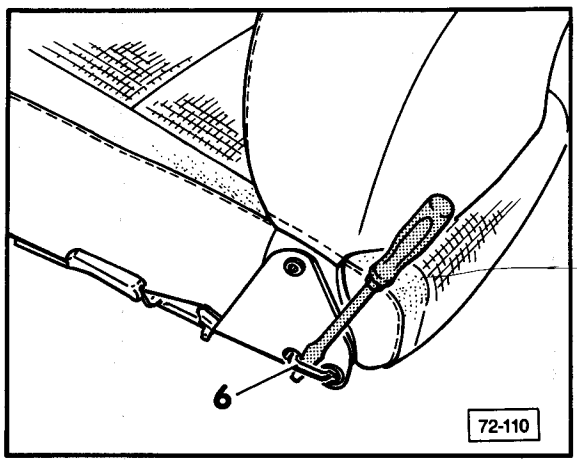

— pry out clamp **6** from outer side of seat with screwdriver
— pull out clamp **6**

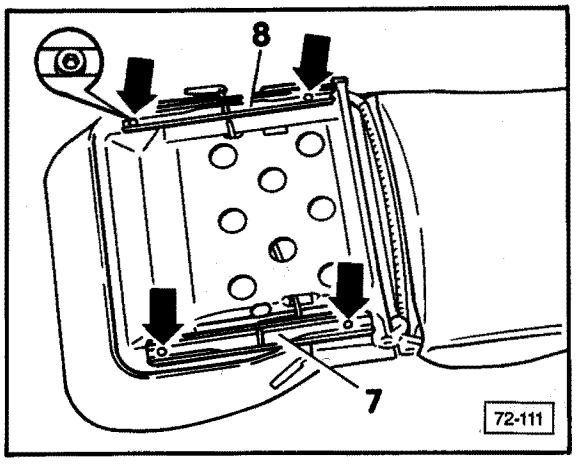

— remove four socket head bolts (**arrows**)
— remove right seat rail **7**
— remove left seat rail **8** to side
— remove backrest

Front seat backrest, installing

Reinstall all components in reverse order of removal, noting the following:
— check seat for proper function

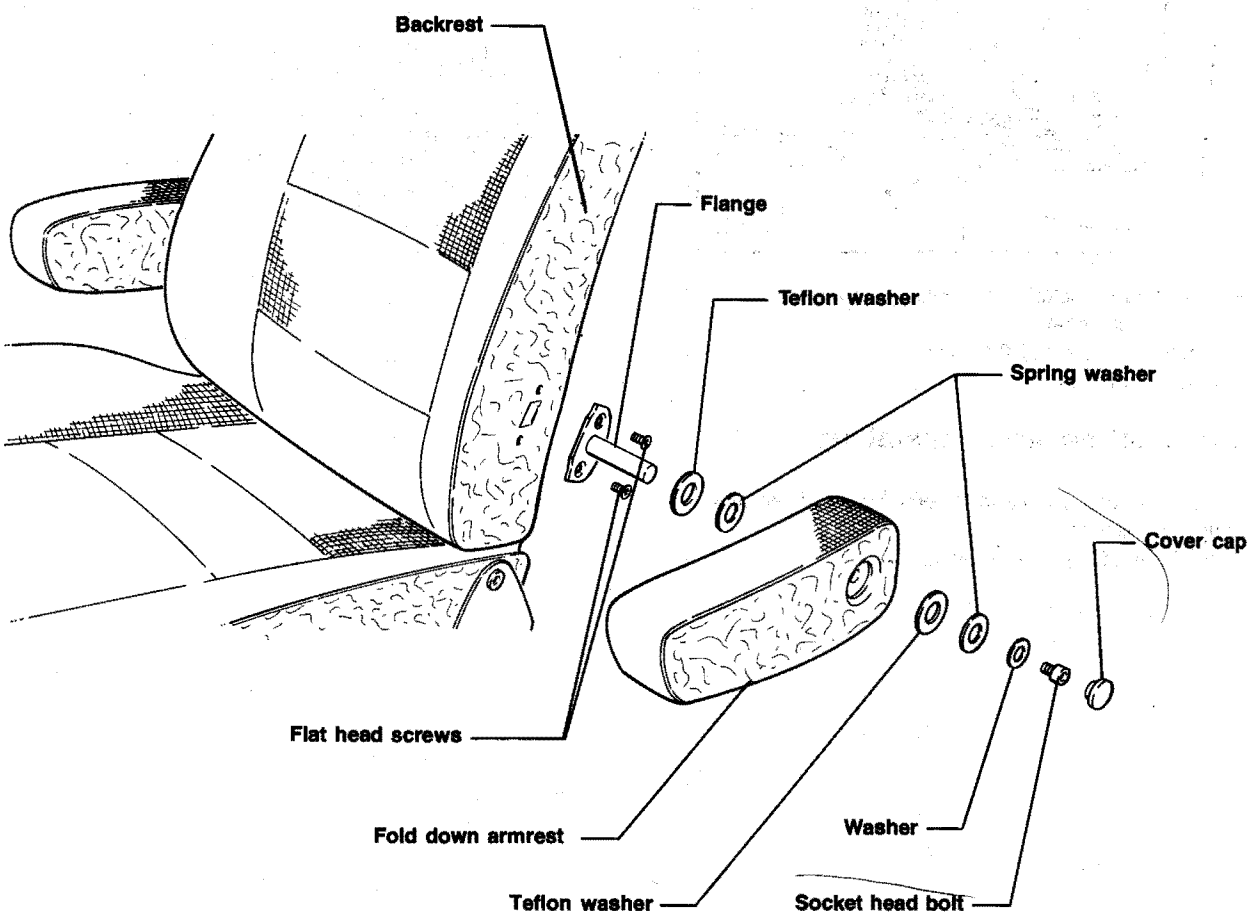

Fold down armrest, removing

— remove cover cap
— remove socket head bolt
— carefully pull off armrest from flange

Fold down armrest, installing

Reinstall all components in reverse order of removal, noting the following:
— check armrest for proper function

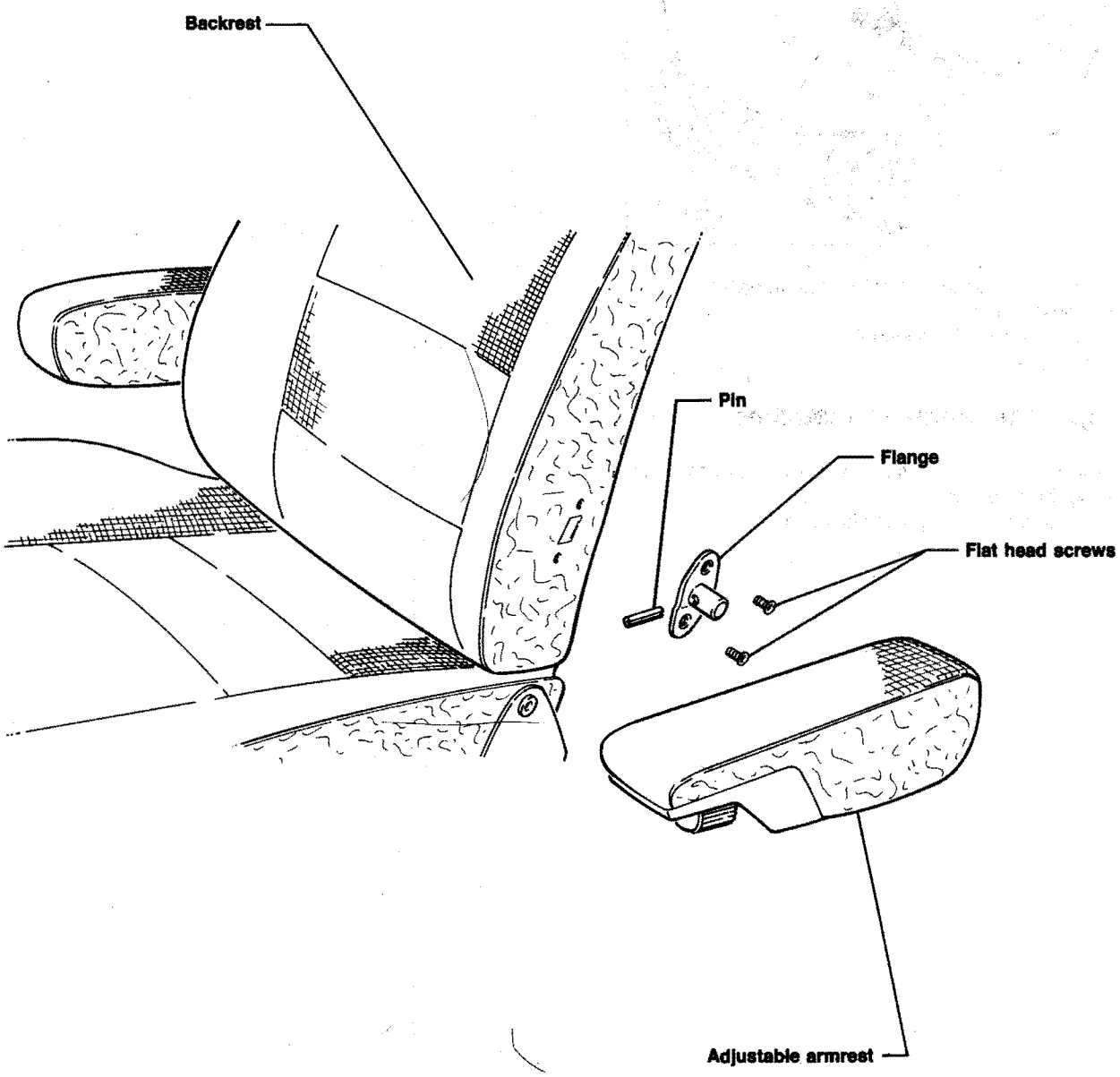

72-114

Adjustable armrest, removing

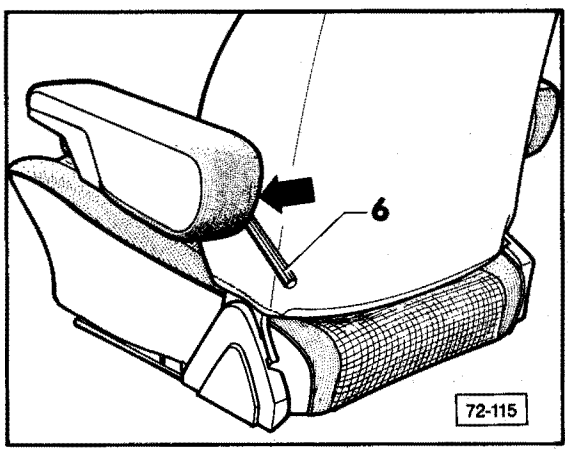

— push covering of armrest to side in order to expose pin (**arrow**)
— drive out pin with punch **6**
— pull off armrest

Adjustable armrest, installing

Reinstall all components in reverse order of removal, noting the following:
— check armrest for proper function

Body
Seat Upholstery

Quick Data

Index

– Heated seats (Canada)
component location 74.2, 74.3
heat element
removing/installing 74.2

Heated seat, seatback element, removing

— disconnect battery ground strap
— disconnect electrical plug under seat
— remove seat from vehicle
— remove wires from electrical plug
— remove seat back
— remove seat or seatback cover
— remove defective element

Heated seat, seatback element, installing

Installation is in reverse order. Note the following:

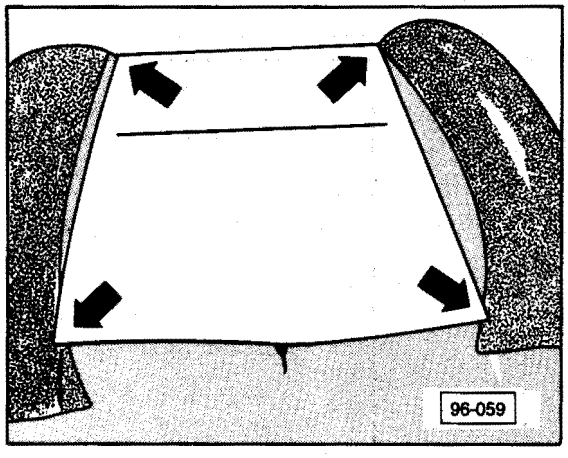

— ensure replacement element is installed wrinkle free
— check heated seat, seatback for proper function

Heated seat switch, removing/installing

— disconnect battery ground strap
— unscrew lower steering column cover
— lift upper steering column cover

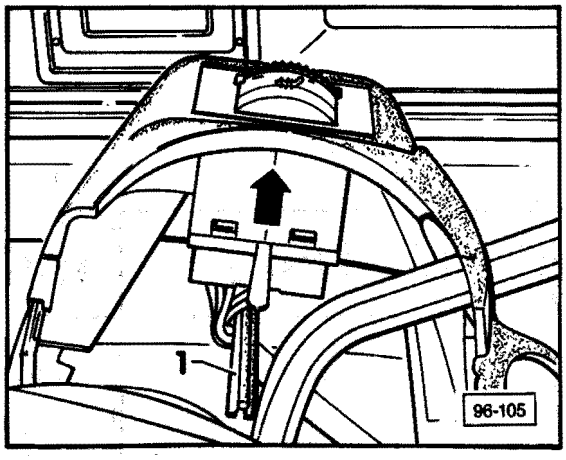

— push heated seat switch (**arrow**) up and disconnect electrical plug
— remove switch

Installation is in reverse order. Note the following:
— route wires to switch around bracket 1
— reconnect battery ground strap
— check system for proper function

Electric component location

Control unit

— remove access trim cover for relay board

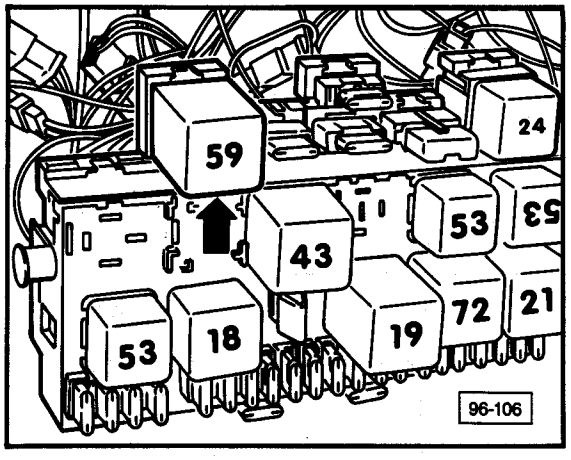

— control unit is identified by number **59** stamped on the top (as shown)

Electrical wiring to driver's seat

Note

Wiring is taped to floor with fabric tape.

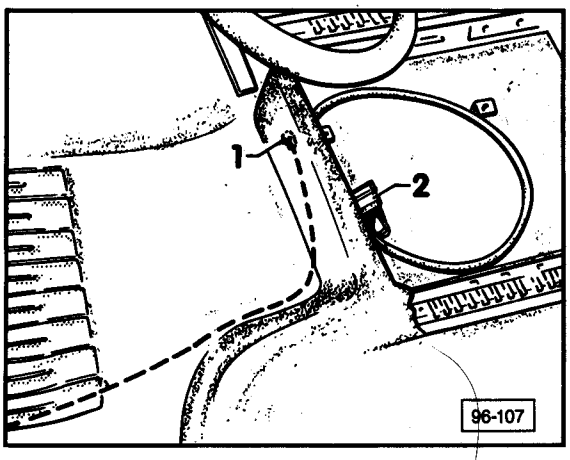

1 — wire routed through seat crossmember
2 — six cavity electrical plug to driver's seat

Electrical wiring to heated seat elements

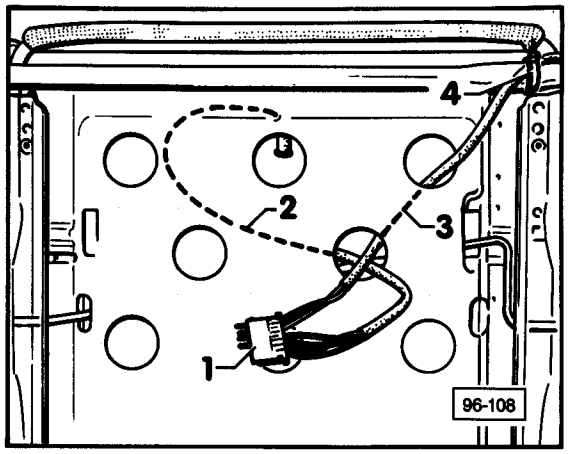

1 — six cavity electrical plug
2 — wire to seat element
3 — wire to seatback element
4 — tie wrap

Electrical troubleshooting

For electrical troubleshooting, refer to appropriate Wiring Diagrams.

Interior Panels, Roof

Index

— Front headliner
installing 75.7a
removing 75.7
— Luggage rack
removing 75.8
— Pop-up roof
installing 75.3
removing 75.2
— Pop-up roof canvas
installing 75.5
removing 75.4
— Pop-up roof seal
installing 75.6a
removing 75.6
— Roof vent
installing 75.7
removing 75.6a

Pop-up roof, removing

CAUTION

Do not damage inside of roof when swinging front mattress and board

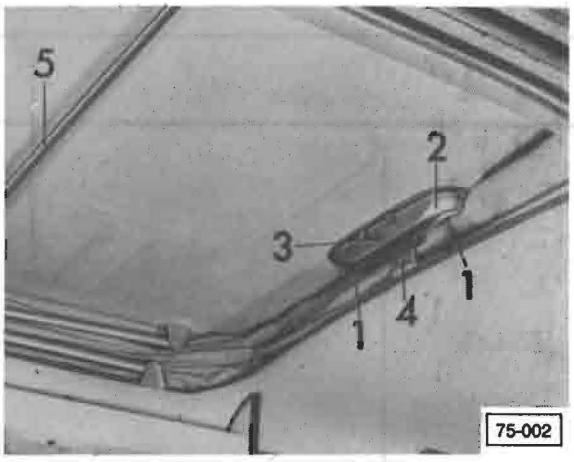

— release lock latches **1** behind lock cover **2** by pulling down firmly with both hands until lock pin **3** disengages at lock plate **4**
— push lock cover **2** and roof up as high as possible
— push up roof with crossbar **5** until support struts are locked into position

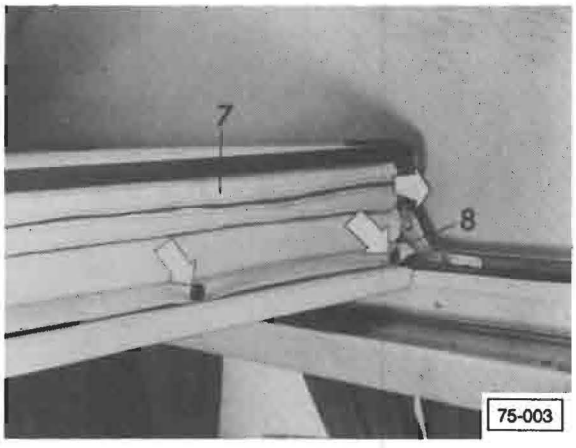

— open snaps (**lower arrows**) for rear mattress
— pull front mattress and board **7** as far as possible to front with overcentering hinges **8**

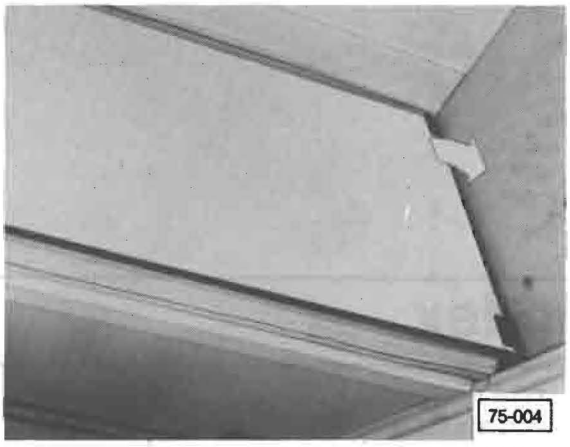

— swing front mattress and board forward
— open snaps of front mattress and remove mattress

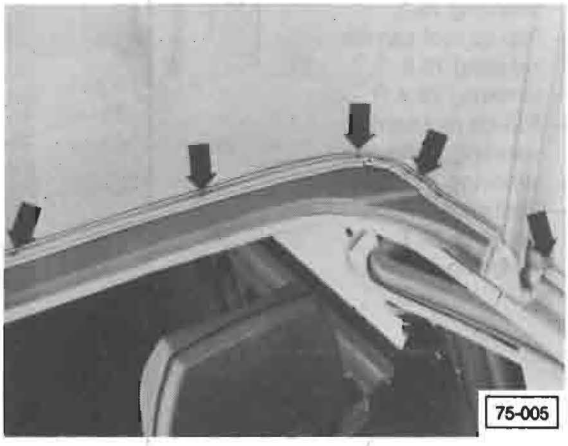

— remove screws (**arrows**) in channel

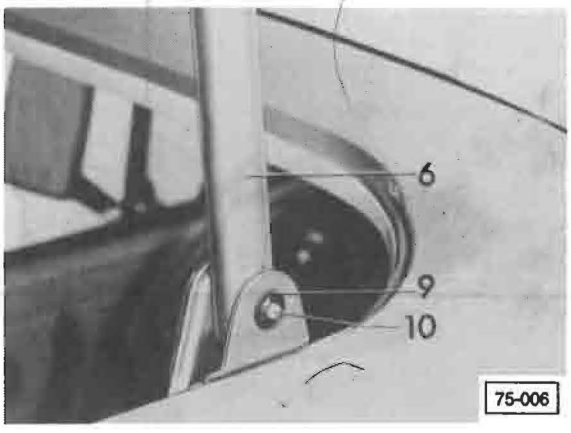

— remove circlip **9** from pin **10** for support struts **6**

Note

Pins **10** remain in brackets **11**.

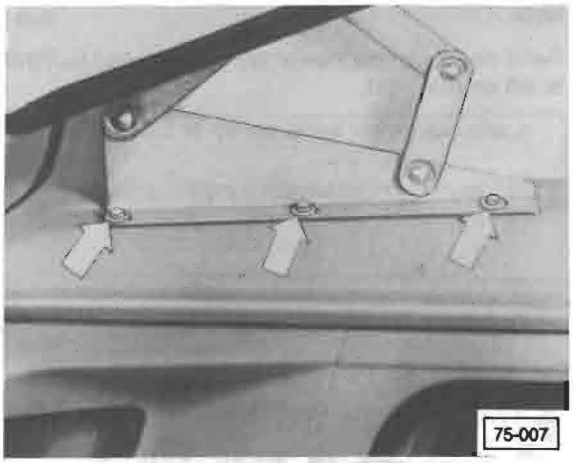

— lower roof halfway and loosen bolts (**arrows**) on each side

Note

Following procedure requires three mechanics.

— pull pins **10** out of brackets (see 75.2 figure 75-006)
— remove linkage bolts on each side and tie linkage together

CAUTION

Do not damage paint with front support struts when removing roof

— lift pop-up roof off vehicle

Pop-up roof, installing

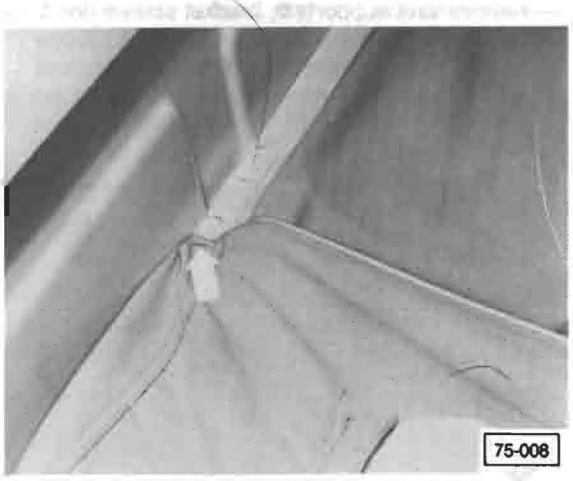

— staple roof canvas to wooden frame on left and right sides to temporarily hold strut supports in position (**arrow**)

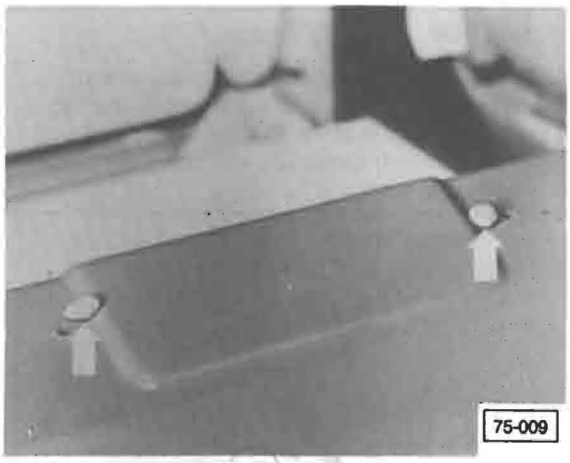

— apply D14 sealing compound to corners of roof reinforcements (**arrows**) to ensure proper sealing between canvas and roof
— lift pop-up roof with canvas onto vehicle
— let pop-up roof rest at rear of roof
— keep pop-up roof open at front approximately 500 mm (20 in.) and place linkage into position

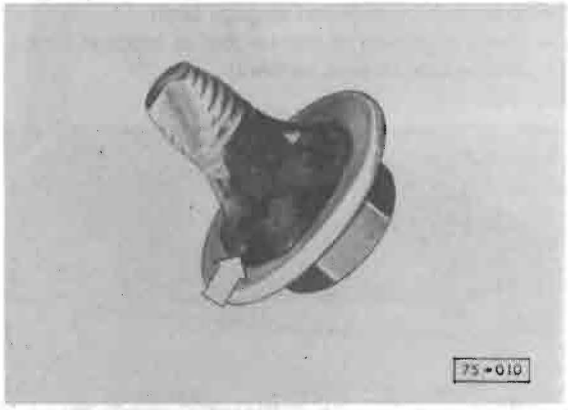

— apply sealing compound under all linkage bolt heads (**arrow**) as shown
— install bolts and tighten
— position strut supports into brackets and install pins
— install **new** circlips
— lower pop-up roof slightly and let canvas rest on vehicle roof
— make two cuts in beading at each corner to ensure proper seating and sealing
— position retaining rails, align and tighten screws from front to rear

CAUTION

When lowering top, gather in canvas sides, making sure that no part of canvas is pinched between support struts or latch. Grasp lock cover with both hands and pull down until lock engages in latch

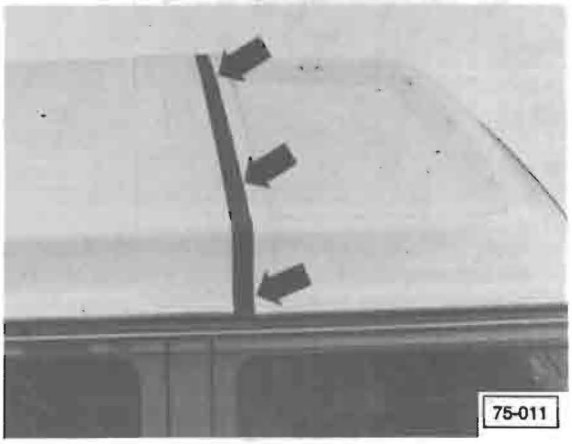

— lower pop-up roof and engage latch
— check alignment of pop-up roof to luggage rack and seating of seal (**arrows**)

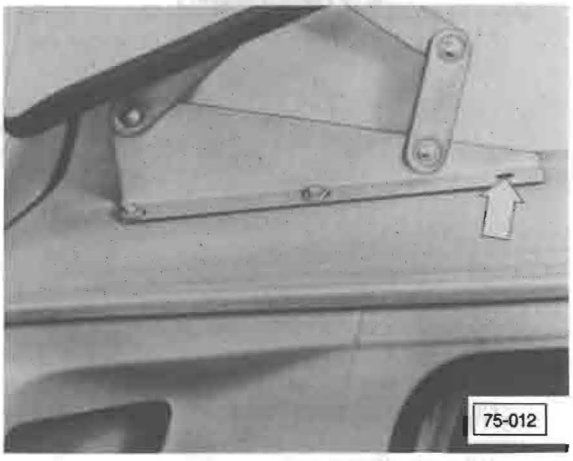

— if necessary realign roof by moving rear linkages in erongated holes (**arrow**) and tighten bolts

Pop-up roof canvas, removing

Note

When canvas must be replaced cut it along vehicle roof. This ensures easy removal of screws in channel. Pop-up roof must be removed to replace roof canvas.

Note

Serial no. of camper equipment is found on I.D. Plate at left on rear seat.

- with equipment serial no. up to E.000 871

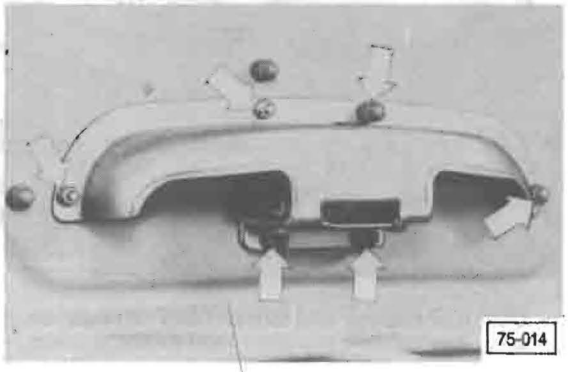

— remove lock cover caps and nuts (**arrows**)
— remove lock cover



— remove strut supports 6, bracket screws and bolts (**arrows**)

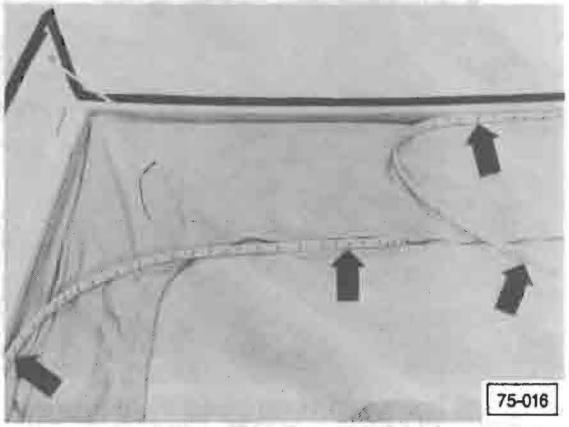

— remove plastic strip held to wooden frame with staples (**arrows**)
— pull out staples holding canvas to wooden frame

Note

With equipment serial no. from E.000 872.

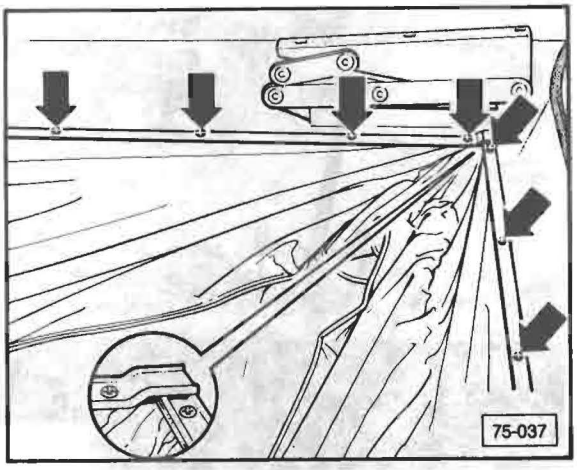

— remove screws and aluminum rails (**see arrows**)
— remove staples and canvas

Note

When removing canvas, save 8x8x10 mm (5/16 x 5/16 x 3/8 in.) wooden blocks for reuse.

Pop-up roof canvas, installing

Note

Up to equipment serial no. E.000 871.

— fit canvas to all four corners of wooden frame with staples
— attach canvas to front, rear and side sections of wooden frame with staples starting from center of sections and working to corners
— cut 4 plastic strips to following lengths
  - 2 each 2200 mm (86 5/8 in.)
  - 2 each 1150 (45 9/32 in.)
— soften plastic strips in warm water before installing



— staple plastic strips to wooden frame (stretching them to required length)

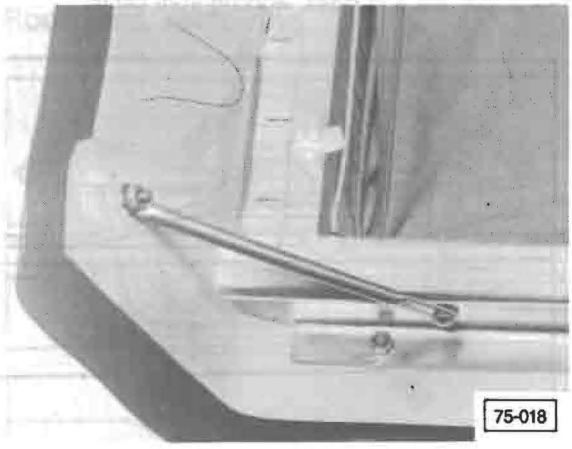

Note

If replacing roof shell only, staple mosquito net to reinforcement strip (**arrow**).

Note

From equipment serial no. E.000 872.

Note

Position seams of canvas at left and right edges of roof, approximately 35 mm (1 3/8 in.) from front corners.

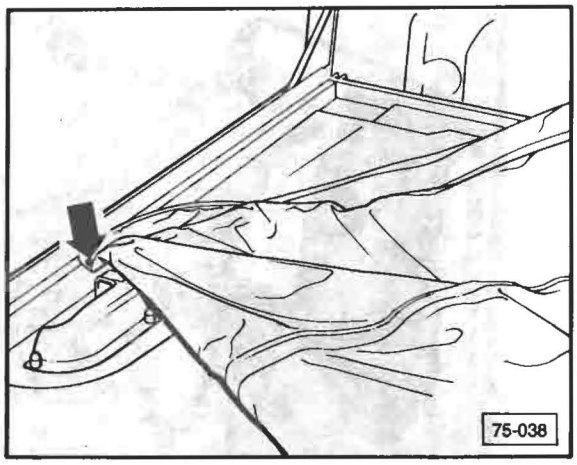

— fit canvas and staple to front center of wooden frame. Pull toward two front corners and staple
— pull canvas evenly to rear corners and staple
— staple rear and sides, working from center

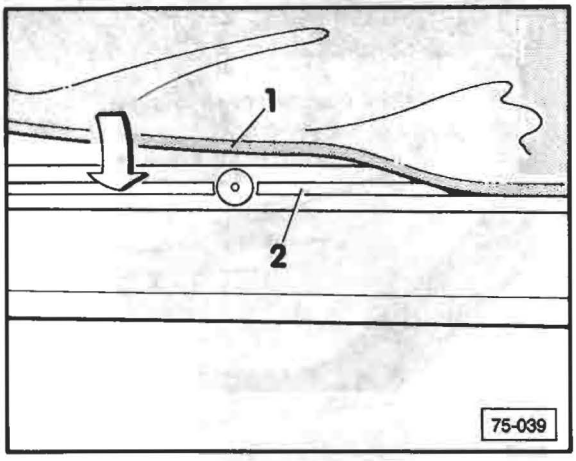

— bolt canvas to rails and ensure bead **1** is centered in guide groove **2** of pop-up roof

Note

Bolt rails starting from center and progressing toward corners.

Pop-up roof seal, removing

General Information

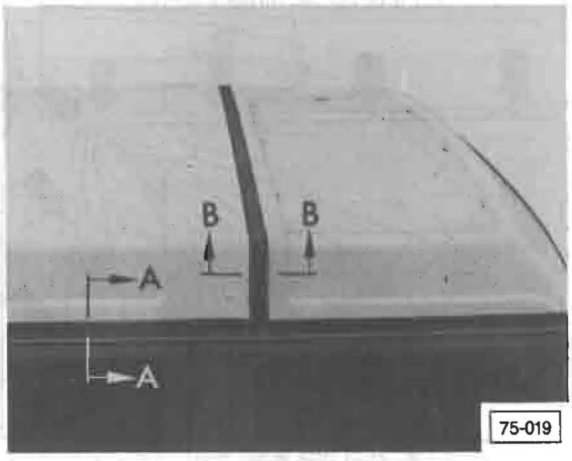

- seal with cross section **A-A** is installed around rear, left and right edges of pop-up roof
- seal with cross section **B-B** is installed on front edge of pop-up roof

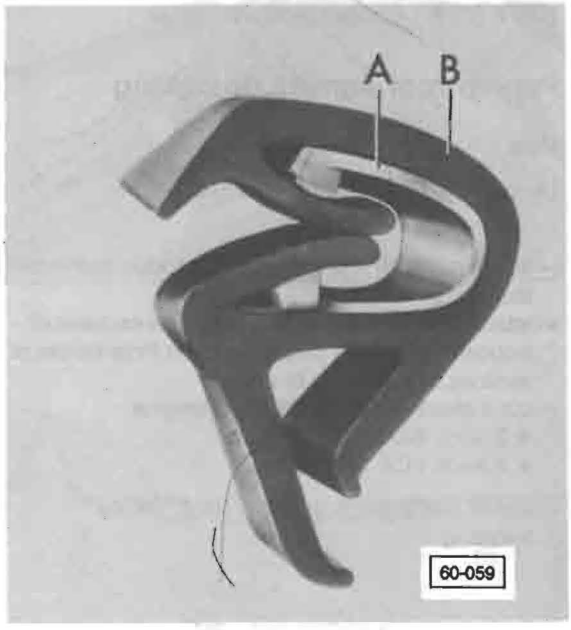

- seal with cross section **B-B** (photo 75-019) (installed on front)
  A = inserted steel clamps
  B = rubber part of seal

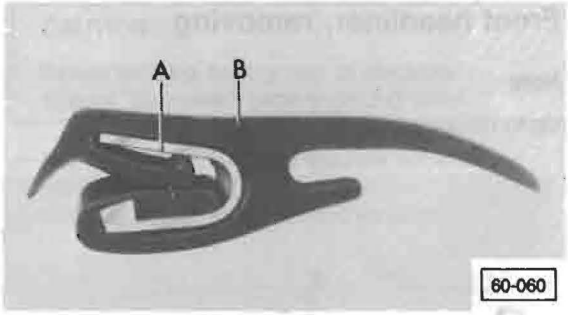

- seal with cross section **A-A** (photo 75-019) (installed on rear and left and right sides)
  A = inserted steel clamps
  B = rubber part of seal

Note

Correct tension of inserted steel clamps can be restored by squeezing seal together.

— open roof and pull off seal

Pop-up roof seal, installing

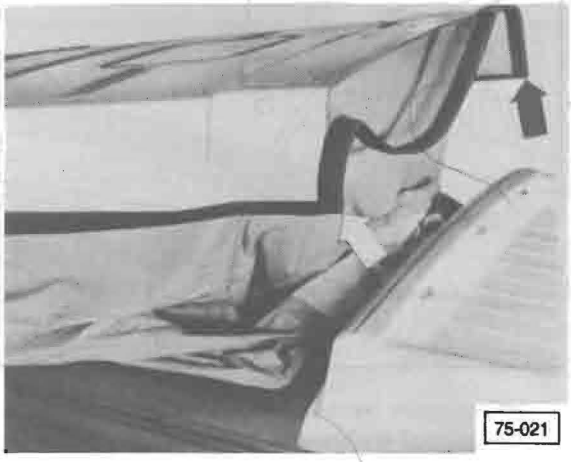

— coat seal with talcum powder
— slide seal on roof starting at both front corners (**arrows**)

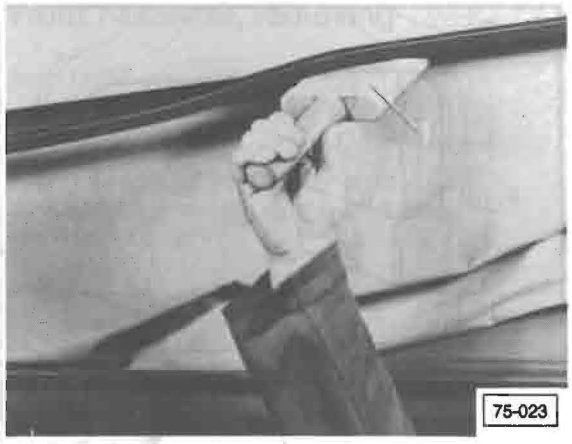

— to make sure seal with inserted steel clamps is seated properly on roof, press it into edges with plastic wedge **1**

Roof vent, removing

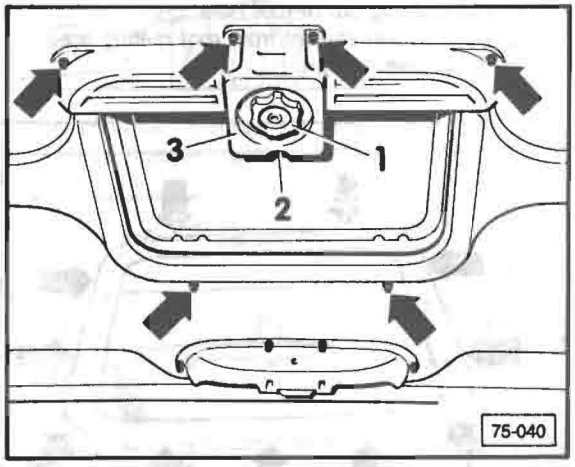

— open roof vent approximately **1-1/2** turns with hand knob **1**
— turn out set screw from hand wheel **1** and remove hand knob
— pry off plastic caps from hex. nuts (**arrows**) and remove nuts
— remove cross-head screw **2**
— remove roof vent bracket cover **3**

CAUTION

Part numbers are for reference only. Always check with your Parts Department for latest information.

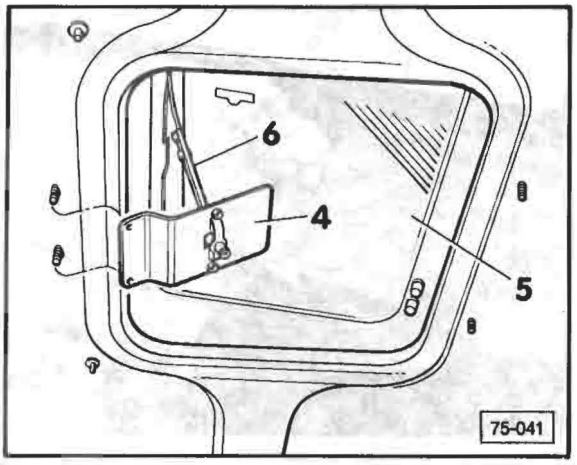

— remove bracket **4** downward from bolts
— remove roof window **5** with support bracket **4**, support arm **6** and hinges (upward)

Roof vent weather molding, removing

— pull old molding out of roof hole
— clean old silicon sealant from roof mating area with a suitable solvent

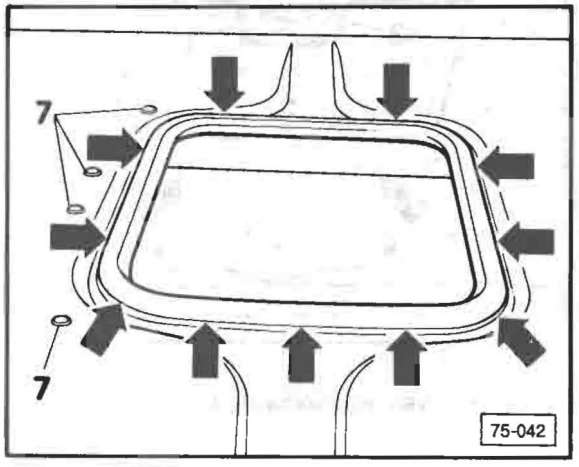

Roof vent weather molding, installing

— fit roof vent weather molding into place
— seal weather molding from outside (**arrows**) with a suitable transparent silicon adhesive compound
— use sealant on vent mounting bolts **7** also

Roof vent, installing

— install a reverse order of removal, noting the following:
- use a suitable sealing compound **D 001 900 05** or equivalent on six mounting bolts **7**

Front headliner, removing

Note

Up to model year 1984.

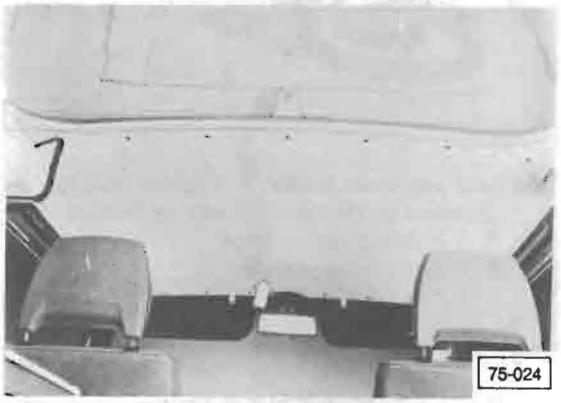

- location of front headliner (**arrow**)

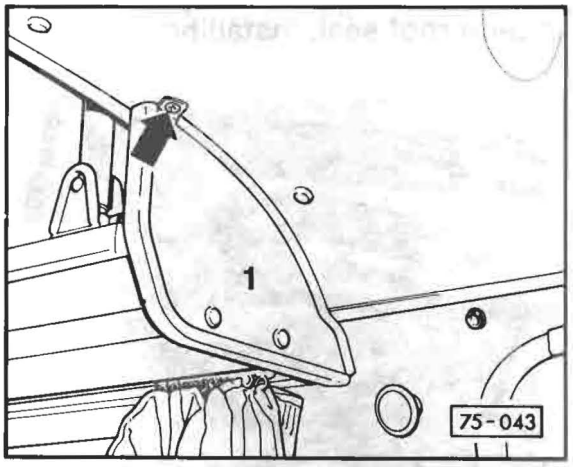

— remove screw (**arrow**) from end plate **1** and storage shelf and remove both parts

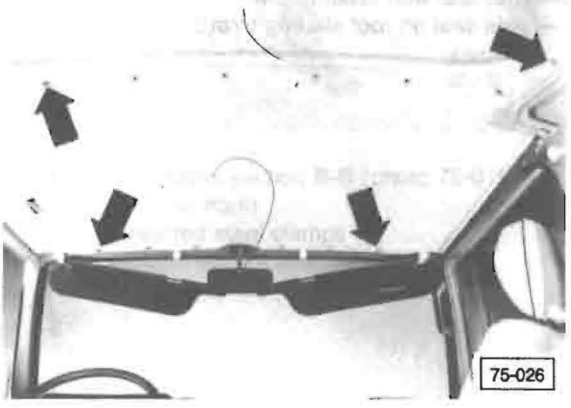

— remove all 14 screws headliner (**arrows**)

CAUTION

Before working on any part of electrical system, disconnect battery ground strap

— remove interior light and insulate hot wire
— unclip sun visor
— turn inside rear mirror toward windshield

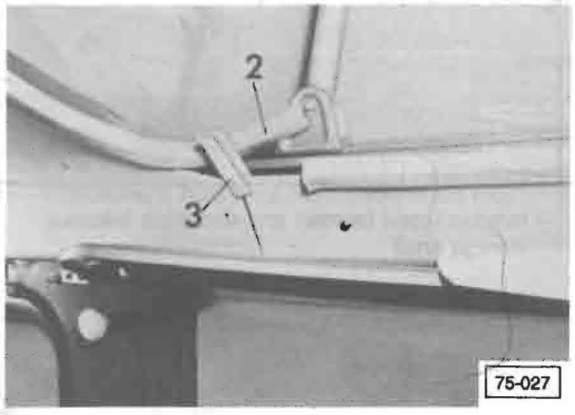

— remove beadings **2** and seals **3**

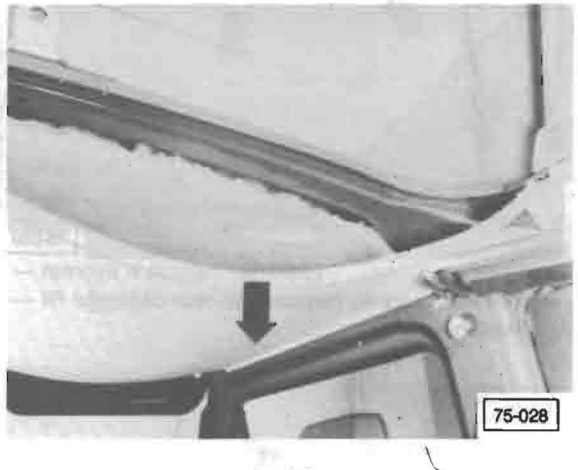

— pull down headliner slightly at center and slide out of retaining rails (**arrow**)
— remove headliner

Front headliner, installing

— have second mechanic hold headliner in position
— slide headliner into left retaining rail
— bend headliner down slightly to slide into right retaining rail
— install seals between front and side headliners
— install all 14 screws and tighten
— install beadings and seals at corners

— connect and install interior light and sunvisors
— install end plate

Front headliner, removing

From model year 1985

Note

Prior to removal of front headliner, roof rail with curtain molding on right must be removed see Repair Group 77.

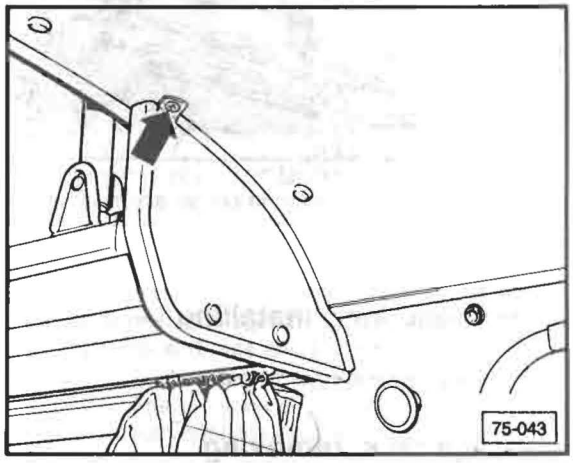

— pry off cover, turn out one screw (**arrow**), bend support bracket slightly downward

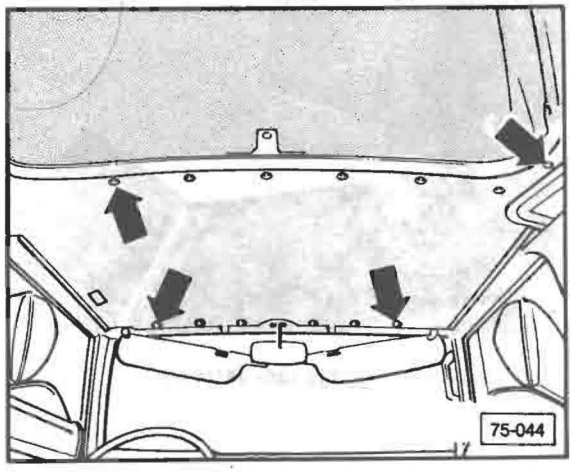

— remove interior light and insulate hot wire
— clip out sun visors and pull toward windshield, turn interior mirror as far as possible toward windshield
— turn out screws (**arrows**) from front headliner

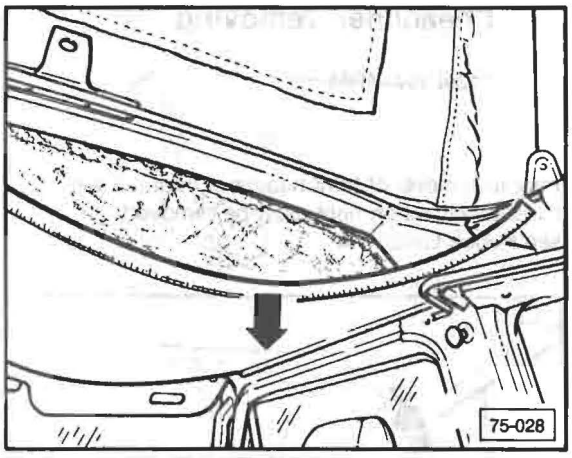

— pull headliner downward in center and push out of side retaining rails
— remove headliner

Front headliner, installing

— installing reverse order of removal

Luggage rack, removing



• location of luggage rack (**arrow**)

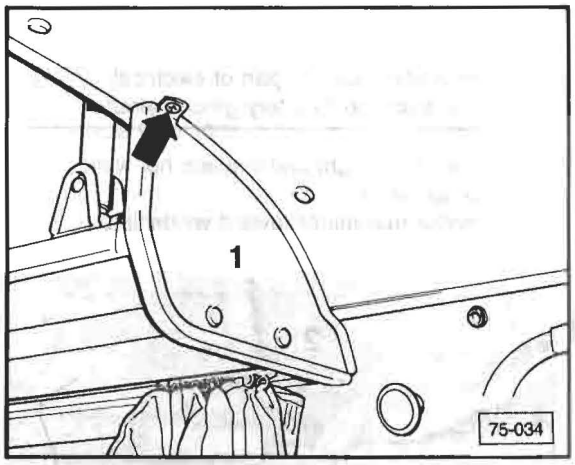

— remove screw (**arrow**) and end plate **1** from storage shelf

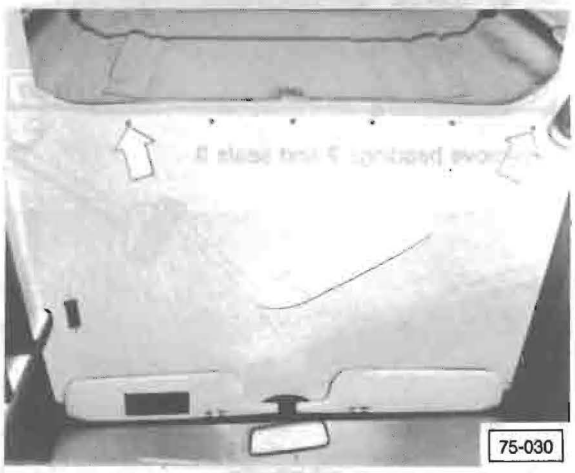

— remove 7 screws (**arrows**) at rear of front headliner

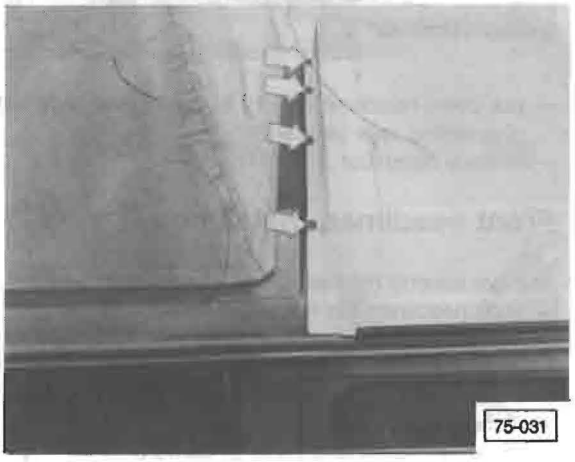

— remove rubber caps (**arrows**)
— remove nuts



— if necessary, hold bolts from underneath roof (**arrows**)

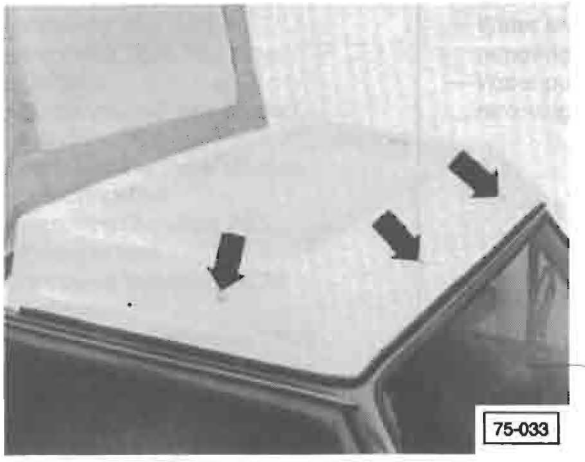

— remove 4 screws (**arrows**)
— lift luggage rack off vehicle roof

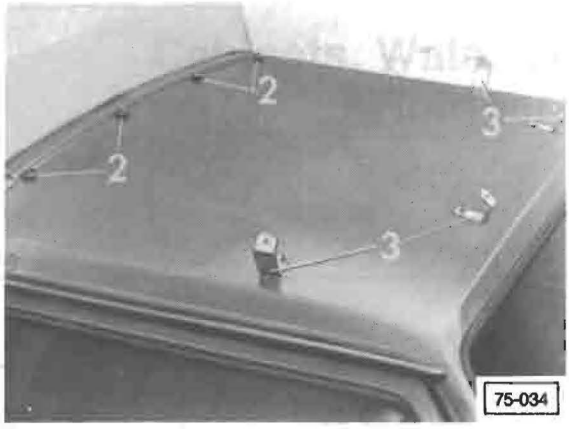

Luggage rack, installing

— place 2 rubber washers on each hole **2**
— place luggage rack on roof of vehicle and align holes
— insert screws and tighten loosely in brackets **3**
— install bolts and nuts and tighten loosely
— check alignment of luggage rack on vehicle roof and finally tighten all screws and nuts
— reinstall front headliner and end plate

Cabinets, Water Tank, Refrigerator

Index

— Ceiling cabinet
with A/C, installing 76.9
with A/C, removing 76.7
without A/C, removing/installing 76.6
— Clothes closet
installing 76.11, 76.14
removing 76.9, 76.11
— Curtains
curtain rail w/fresh air duct, installing 76.6
curtain rail w/fresh air duct, removing 76.5
removing/installing 76.3
— Propane tank
removing/installing 76.23
— Refrigerator
air supply modification 76.25
installing 76.25
removing 76.24
— Sink cabinet
installing 76.23
removing 76.20
— Storage chest w/water tank
installing 76.17
removing 76.15
— Storage shelf
removing/installing 76.2
w/curtain rod
removing/installing 76.4
— Water faucet w/pump switch
removing/installing 76.17
— Water level sensor
removing/installing 76.20
— Water pump, kitchen
removing/installing 76.18

Storage shelf, removing

Note

Up to 1984 model year.

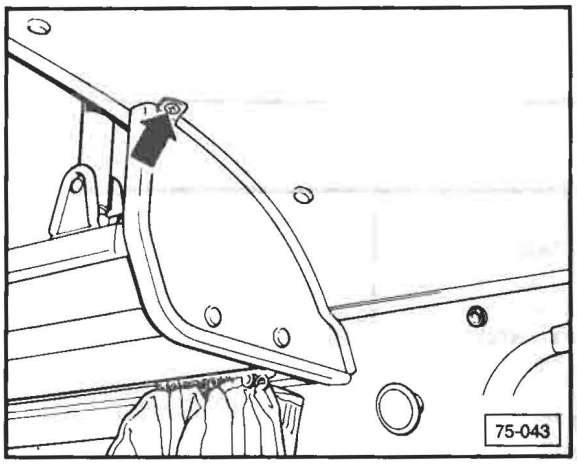

— remove screws (**arrows**) and end plate **1**

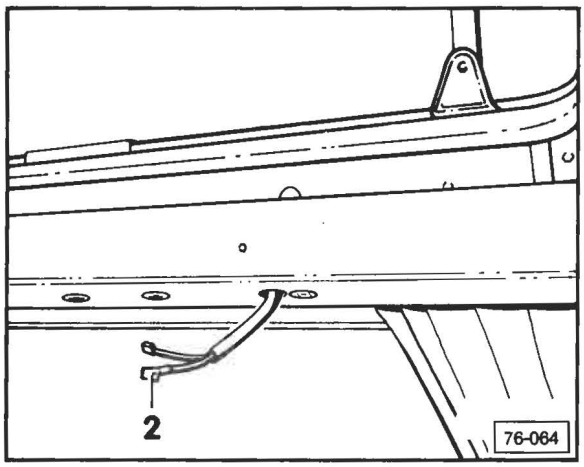

CAUTION

Before working on any part of electrical system, disconnect battery ground strap.

— disconnect wiring for interior light after pulling out of roof reinforcement
— insulate hot wire **2**

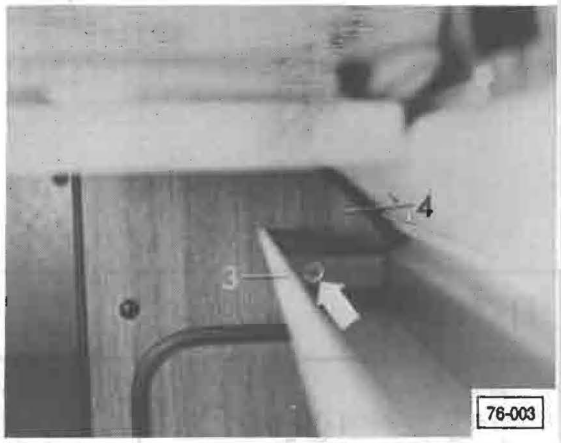

— remove nut (**arrow**) and push bolt through storage shelf **3** and clothes closet **4**
— swing shelf upward and pull out

Storage shelf, installing

— place shelf in position and install bolt and screws in reverse order
— connect interior light wiring

CAUTION

Do not cross wires when reconnecting interior light.

Curtains (left side), removing

Note

Up to model year 1984.

Note

Remove storage shelf first see page 76.4.



— remove curtain cord screw (**arrow A**) in clothes closet
— remove curtain rail screw (**arrow B**)
— push rear curtain toward front
— remove both curtain rail screws at front
— pull curtains off rails

Curtains (left side), installing

— place curtains on rails
— install curtain rails and tighten screws
— push curtain behind clothes closet
— loosen rail and retighten

Curtains (right side), removing

Note

Up to model year 1984.



— remove cover screws **1**

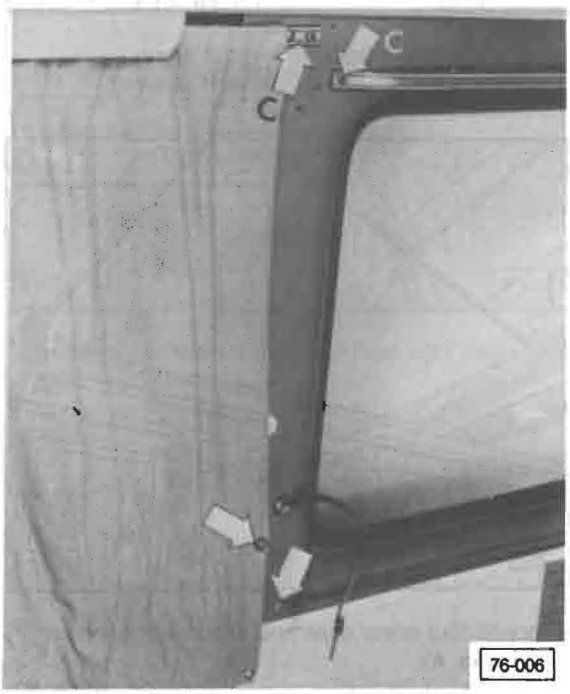

— remove rail screws **C**
— remove rail screws for sliding door curtain (**lower arrows**)
— pull curtains off rails

Curtains (right side), installing

— place curtains on rails
— install rails and tighten screws
— install cover

Storage shelf (left) with curtain rail, removing

Note

From model year 1985.

— unhook curtain at left front ("B"-pillar)

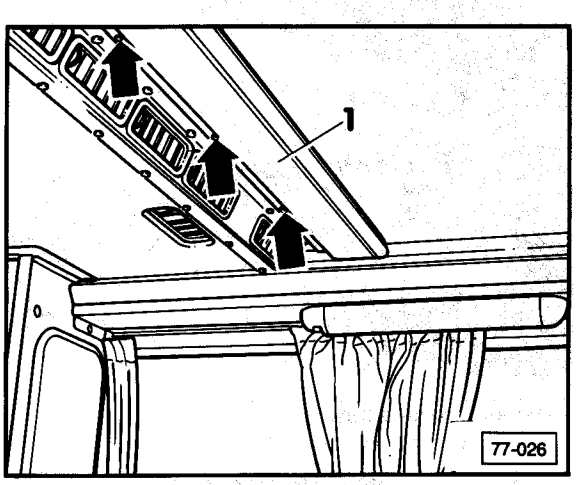

— remove cover **1** from center roof frame reinforcement (four Phillips head screws).

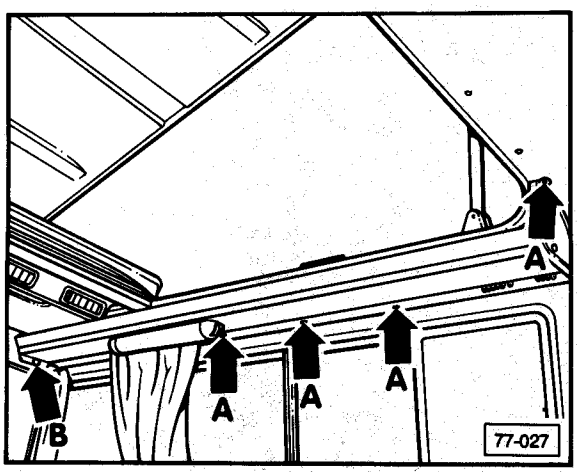

— pry off four cover caps and unscrew four screws (**arrows A**)
— remove nut (in clothes closet) from bolt (**arrow B**) and push out carriage bolt

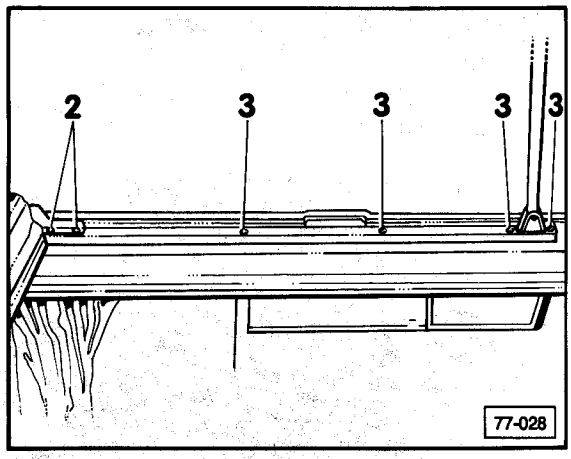

— remove two screws **2** from left hinge of front bed board
— pry off cover caps, unscrew four screws **3**

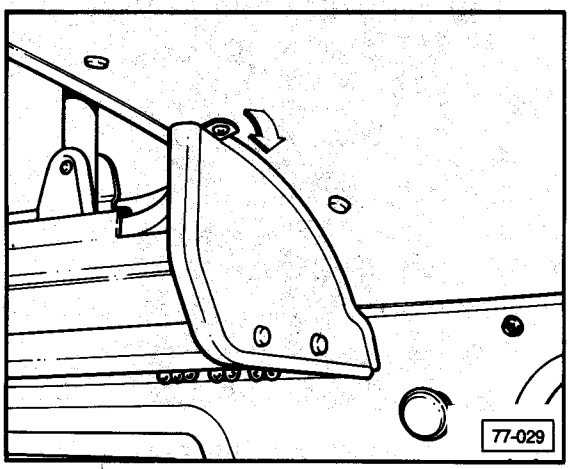

Note

To prevent damage to front headliner when removing storage shelf with curtain rail on left side, support bracket of end plate must be bent slightly downward.

— move storage shelf with curtain rail to the left side and disconnect wiring connections for passenger compartment light
— insulate battery pos. wire
— remove storage shelf with curtain rail

Storage shelf with curtain rail (left), installing

— install in reverse order of removal

Fresh air duct with curtain rail (right), removing

Note

From model year 1985.

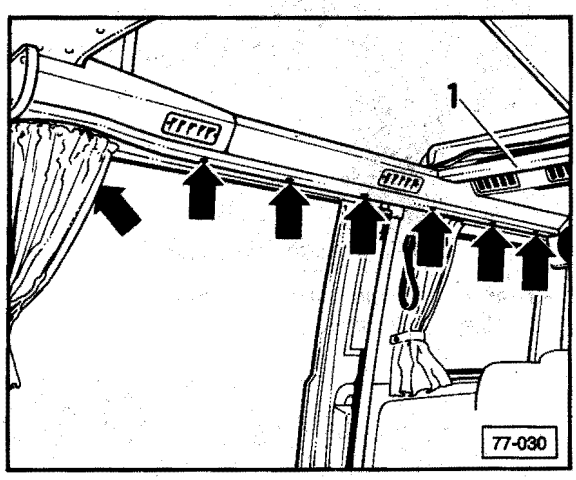

— remove cover **1** from center roof frame reinforcement, four screws
— remove snaps for curtains on the "B and C-pillar", right side
— pry off caps, remove seven screws (**arrows**) from below curtain rail

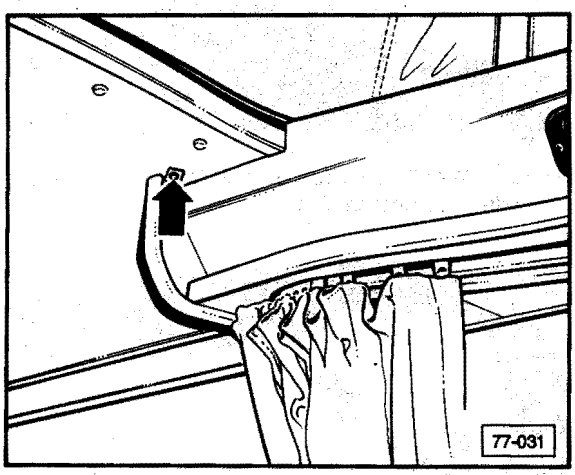

— pry off cap, remove one screw (**arrow**) from cover plate
— bend supporting bracket slightly downward

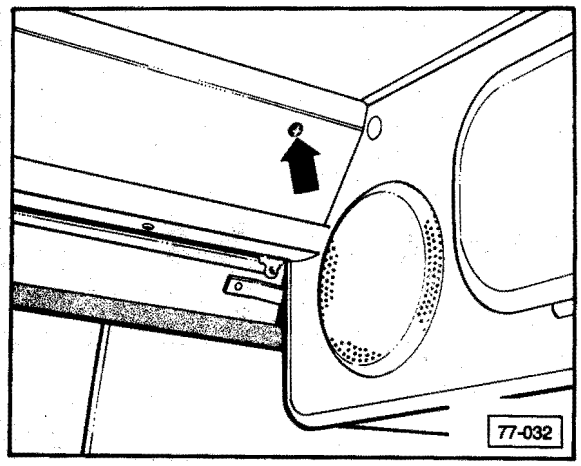

— remove screw (**arrow**)

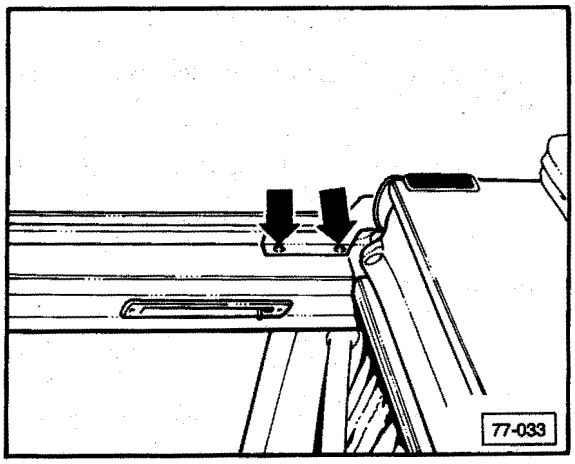

— remove two screws (**arrows**) from right hinge of front bed board

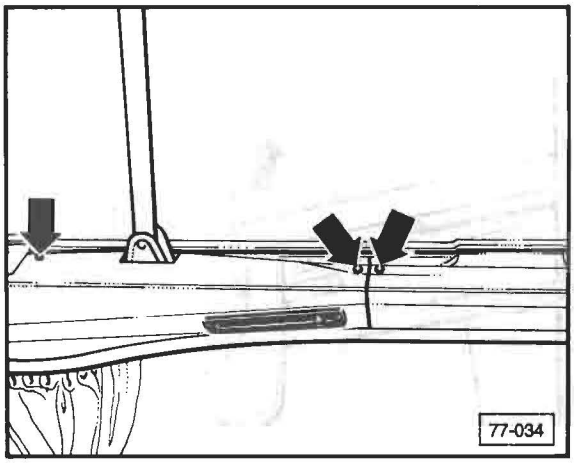

— pry off five protective caps and remove screws (**arrows**)
— carefully pull off right curtain rail

Fresh air duct with curtain rail (right), installing

— install in reverse order of removal

Ceiling cabinet, removing

Vehicles without A/C

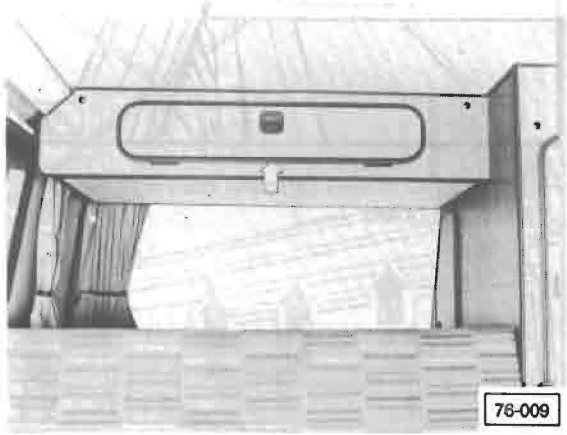

- location of ceiling cabinet (**arrow**)

— remove roof-bed mattress
— remove part of lower-bed mattress on engine compartment deck

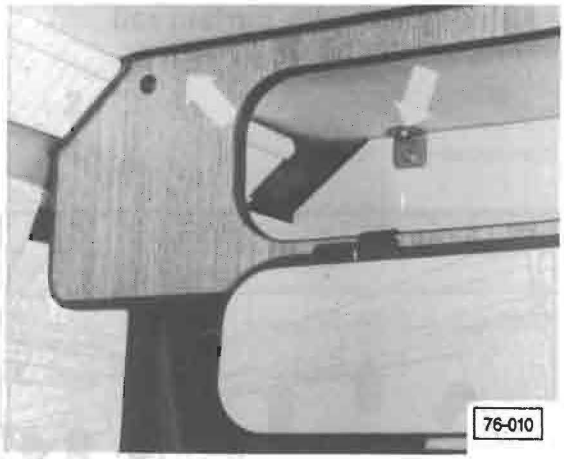

— remove both nuts (**arrows**) of right side brackets holding ceiling cabinet

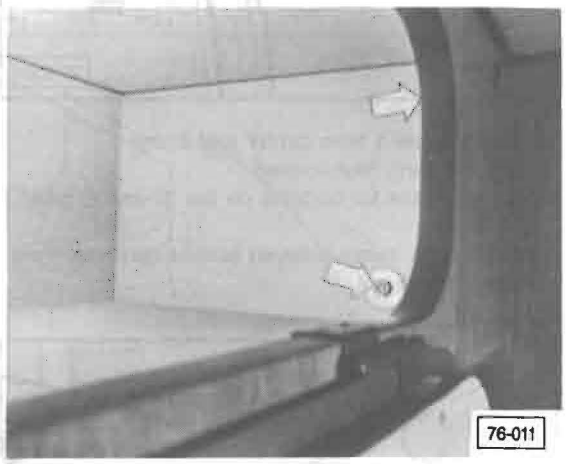

— remove both nuts (**arrows**) on left side and push bolts in to clothes closet

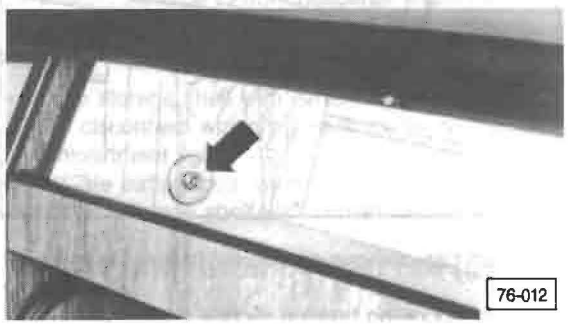

— remove nut (**arrow**) on left side and push bolt into clothes closet
— lift cabinet out (2 mechanics needed)

Ceiling cabinet, installing

— install in reverse order

Ceiling cabinet, removing

Vehicles with A/C

Note

Ceiling cabinet can only be removed if storage shelf with curtain rail, left, is removed first, see p. 76.4, and front bed board with mattress, see repair group 75, has been removed.

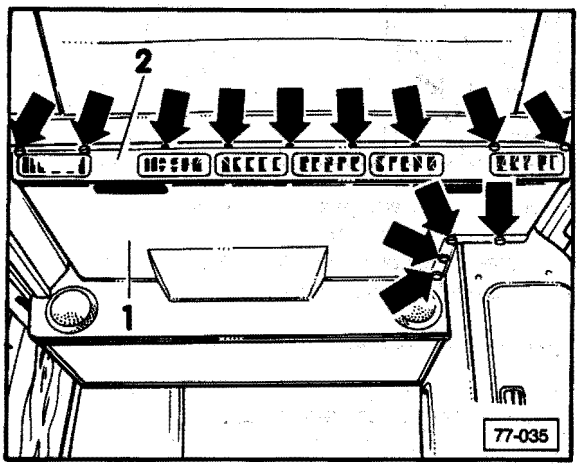

— remove vent **1** with cover **2** (20 screws with protective caps)

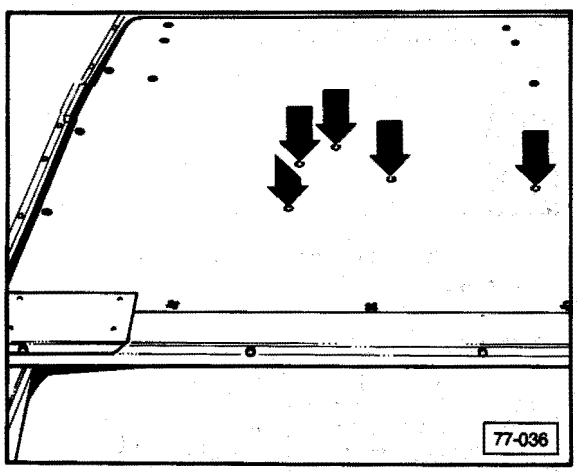

— remove five countersunk screws (**arrows**) from above rear bed board, support vent channel with cover from below with one hand
— lower vent channel with cover and remove

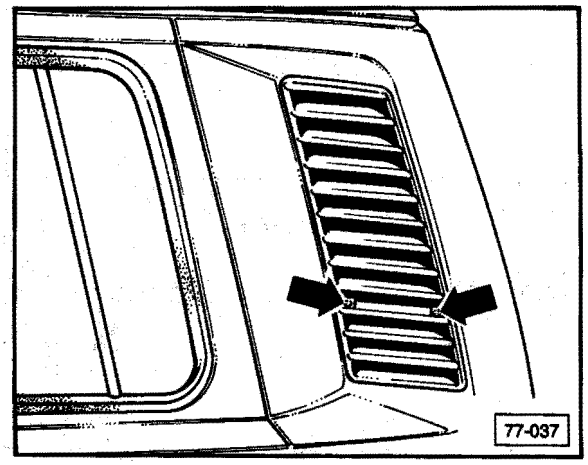

— remove two screws each (**arrows**) from left and right air intake grills, remove grills

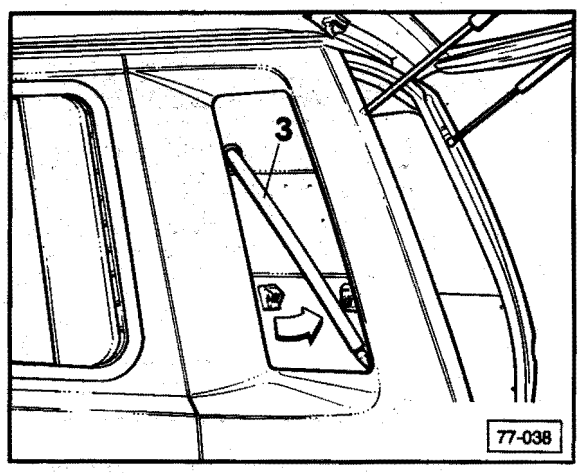

- water drain hoses **3**

— unhinge clothes closet doors

CAUTION

Before working on any part of electrical system, disconnect battery ground strap.

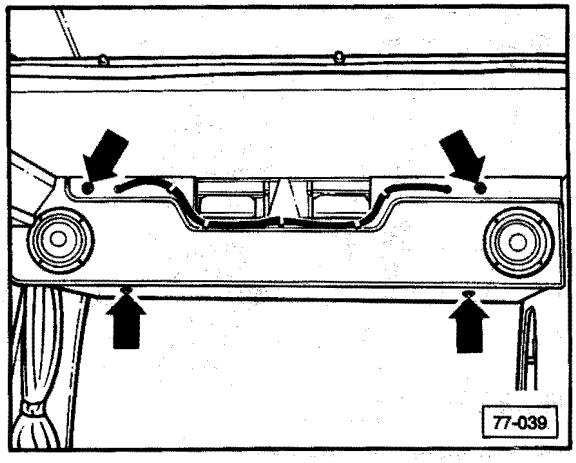

— remove four screws (**arrows**)

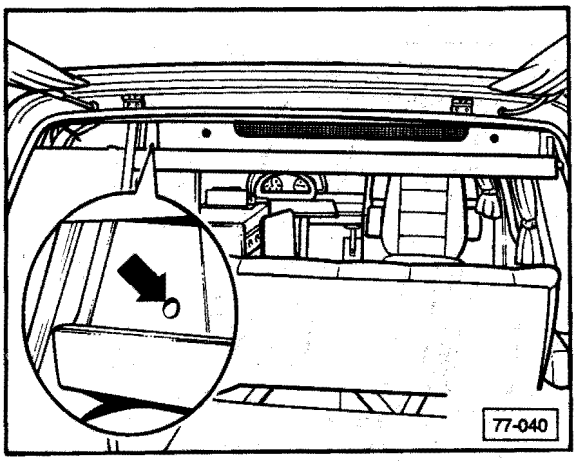

— loosen nut and push carriage bolt (**arrow**) out of clothes closet

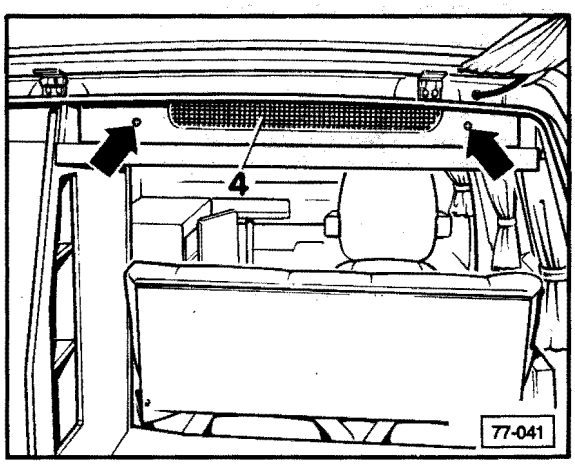

— remove two screws (**arrows**) while second mechanic supports ceiling cabinet
— pull ceiling cabinet slightly downward and remove cross wall **4**

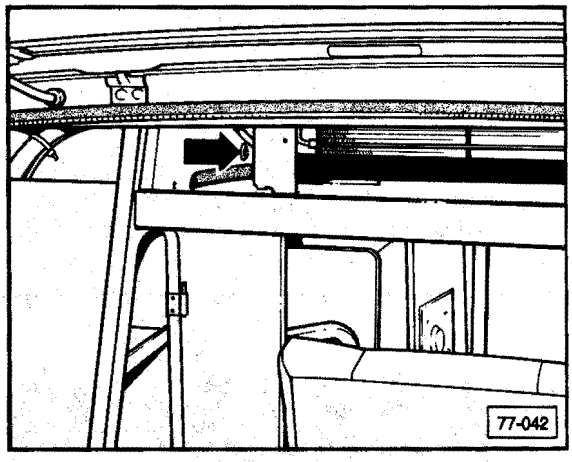

— remove nut and push out carriage bolt (**arrow**) from clothes closet
— carefully lower ceiling cabinet and disconnect left and right speaker wires

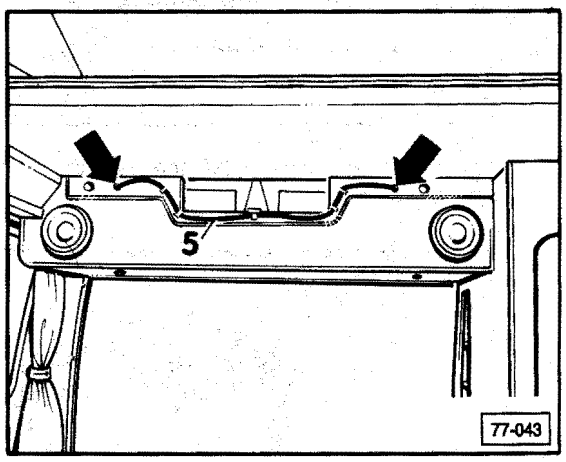

— unclip left speaker wires **5** and pull out of holes (**arrows**)

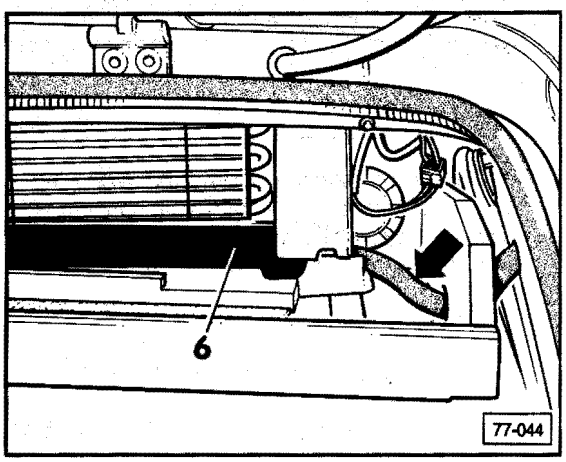

— disconnect water drain hoses (**arrow**) right and left from drip pan **6**

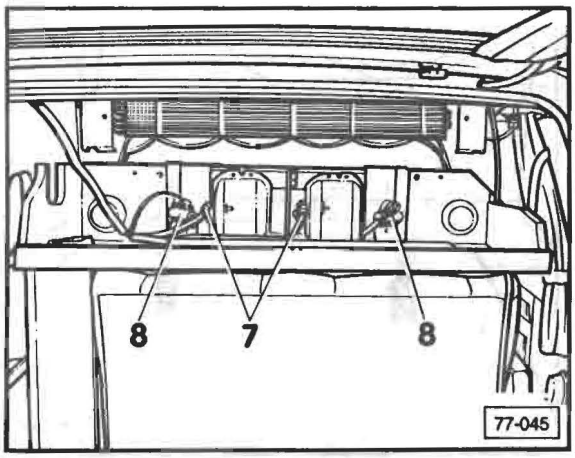

— continue to lower ceiling cabinet and support on backrest
— disconnect two terminals **7** and disconnect both series resistors for evaporator fans **8**

CAUTION

Disconnect series resistors for evaporator fan very carefully. If one of the series resistors is damaged, the entire resistor block must be replaced.

— remove ceiling cabinet

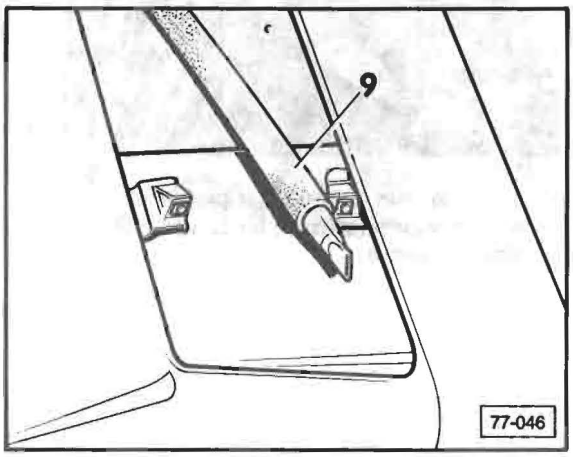

- when installing water drainage hoses, care must be taken that flapper valves are not obstructed with foreign material

— prior to installation, heat water drainage hoses with hot air blower to ease installing

Ceiling cabinet, installing

— install in reverse order of removal

Clothes closet, removing

Note

Up to 1984 model year, **without** air conditioning. Remove ceiling closet first, see page 76.6.



— remove part of lower bed mattress on engine compartment deck
— remove both closet doors

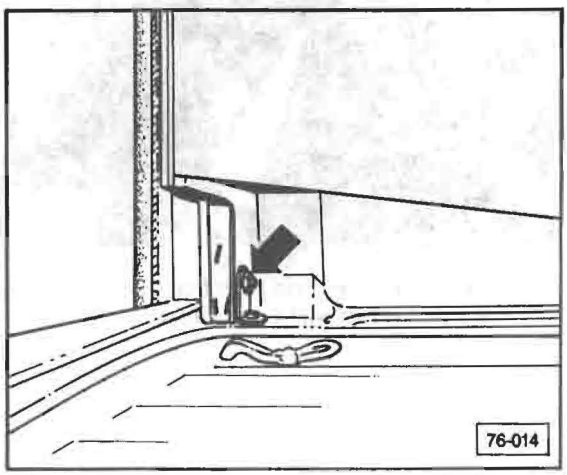

— remove nut (**arrow**) below closet and push bolt out of bracket

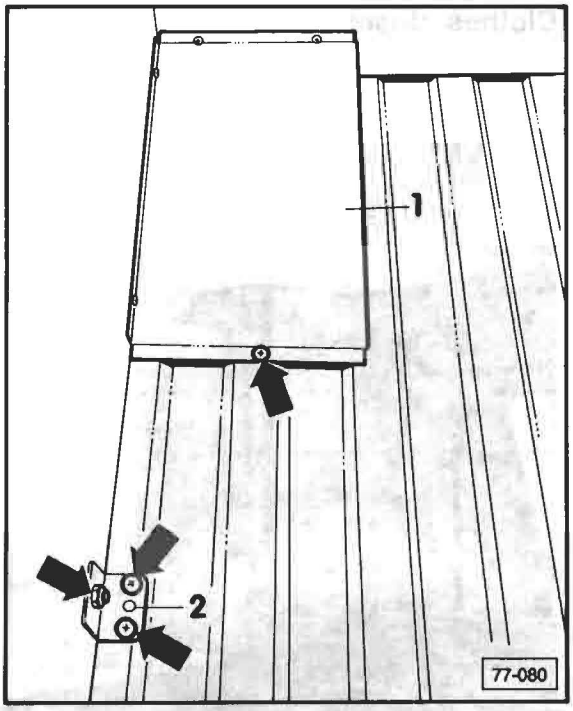

— remove screw in bracket **1** (**upper arrow**)
— remove nut (**left arrow**) and push bolt out of bracket
— remove both screws (**arrows**) holding bracket **2**

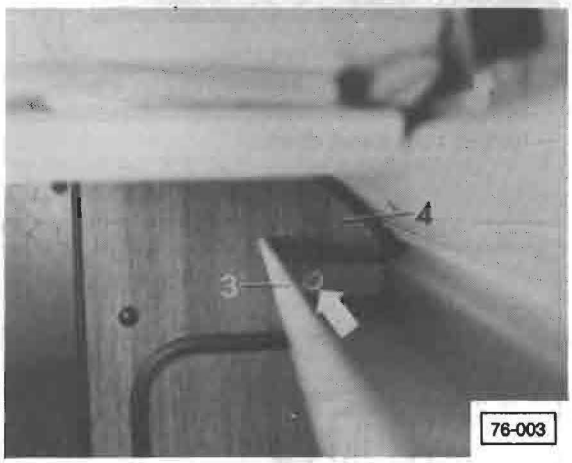

— remove nut (**arrow**) and push bolt through storage shelf **3** and closet wall **4** into closet

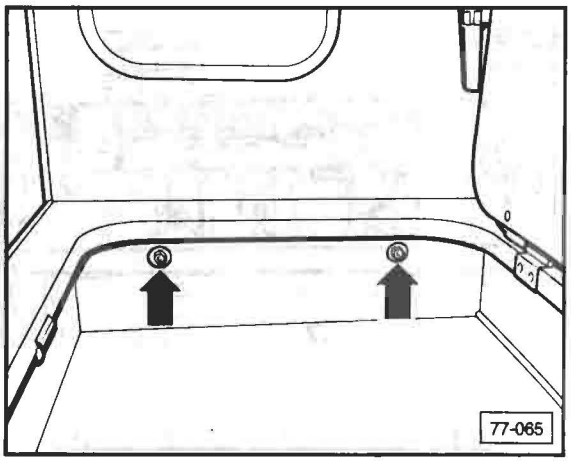

— remove both nuts (**arrows**) in storage chest and push bolts through closet wall into closet

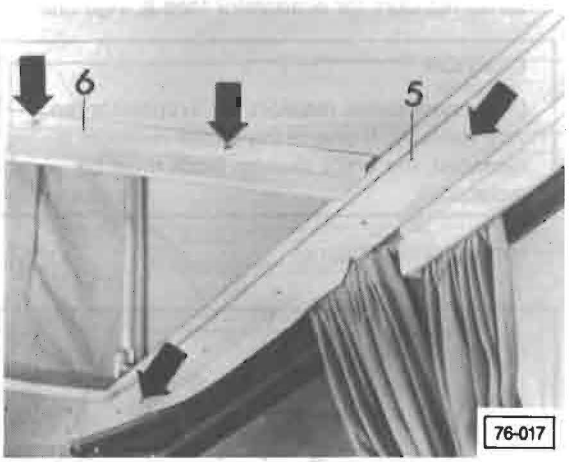

— remove screws (**arrows**) for roof rail **5**
— remove screws (**arrows**) for center roof reinforcement **6**

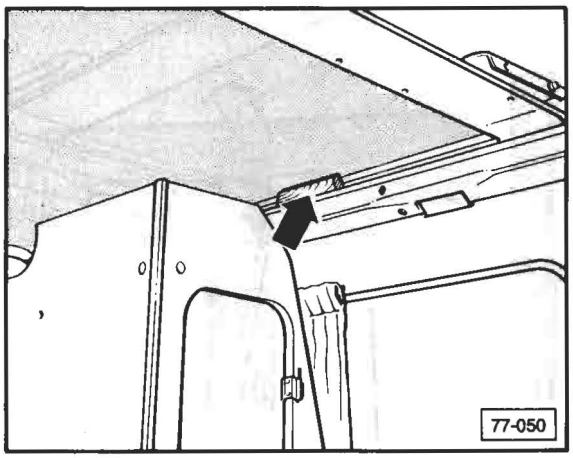

— loosen screws holding roof bed board on left and right sides
— lift bed board (**left arrow**) up approximately 10 cm (4 in.) and support with wedge as shown
— remove engine compartment deck lid



— slightly lift backrest of rear seat bench
— using 2 mechanics pull closet to center of vehicle and lower into engine compartment
— swing closet to front and lift to rear, out of vehicle (**arrows**)

CAUTION

Do not damage engine components when lowering closet into engine compartment.

Clothes closet, installing

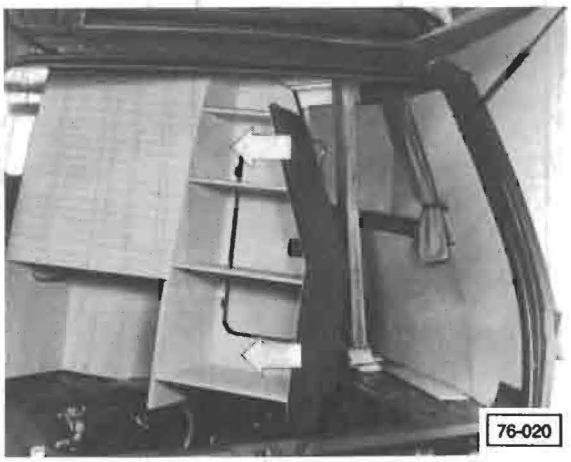

— pull up backrest of rear-seat bench as far as it will go
— place closet into position (**arrows**)
— slide backrest of rear-seat bench into position
— install engine-compartment deck lid
— install all remaining parts in reverse order

Clothes closet, removing

Note

From 1985 model year, **without** air conditioning.

Clothes closet can be removed if storage shelf with curtain rail, left, and ceiling cabinet have been dismantled first. See 76.4, 76.6

— remove mattress on engine compartment deck
— unhinge both doors of clothes closet and remove

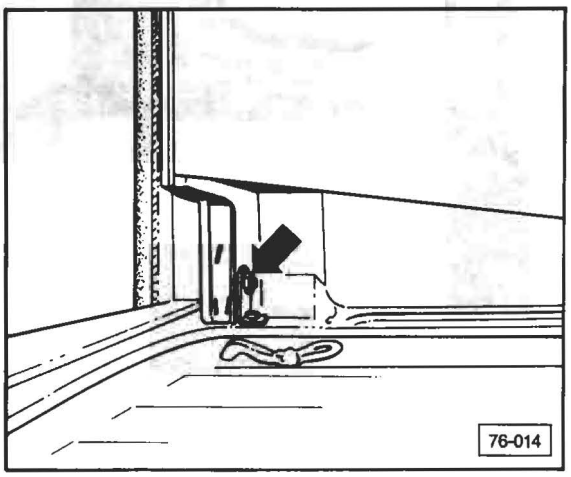

— remove one nut (**arrow**) below closet and push bolt out of bracket

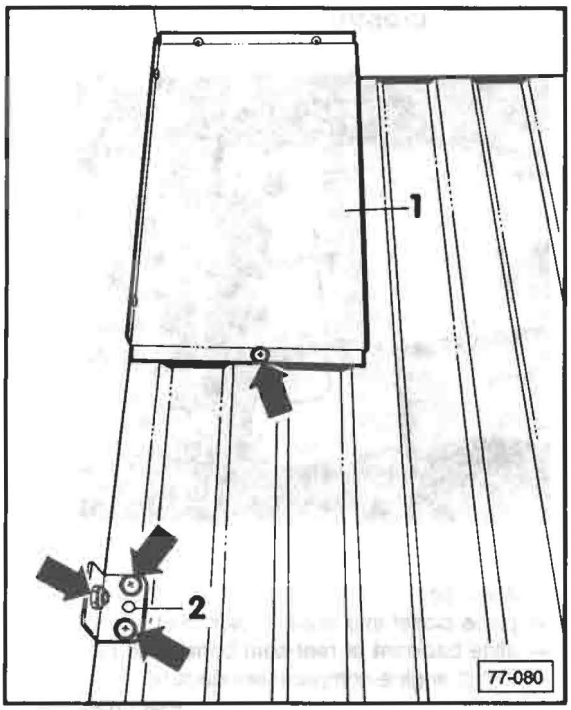

— remove one screw in lower front area from support bracket **1**
— remove one nut at support angle and push bolt out
— remove two Phillips head screws from engine compartment deck and remove support angle on floor **2**

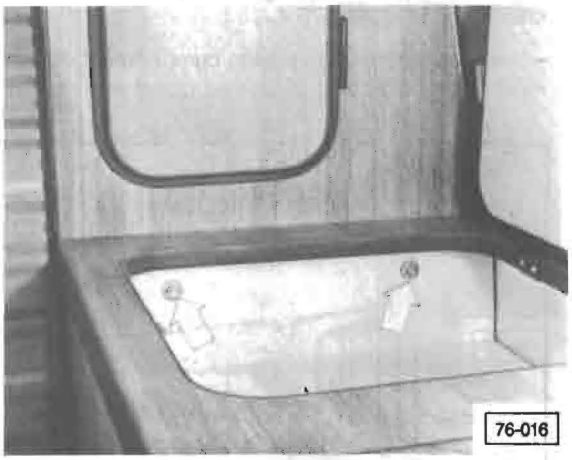

— remove two nuts in stowage pan of storage chest and push bolts through chest and clothes closet
— loosen stop for seat bench and pull seat bench forward approximately 10 cm (4 in.)

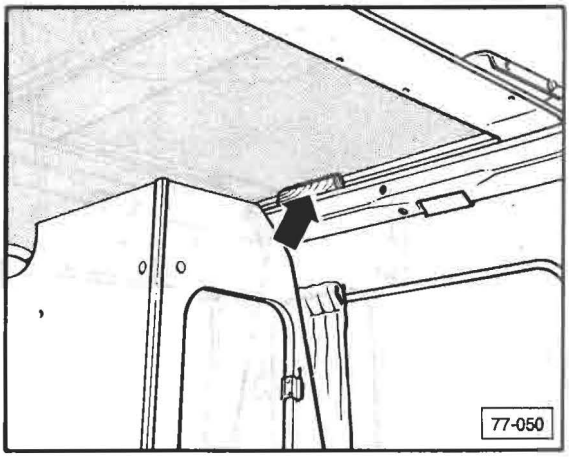

— unscrew left and rear bed board, seven screws
— lift rear bed board on left side approximately 15-20 mm (3/4 in.) pushing a wedge underneath (**arrow**)

Note

Procedure requires 2 persons.

Clothes closet, installing

— install in reverse order
— swing clothes closet to side, tilt onto engine compartment lid and remove

Clothes closet, removing

Note

With air conditioning, remove ceiling cabinet first, see 76.6.

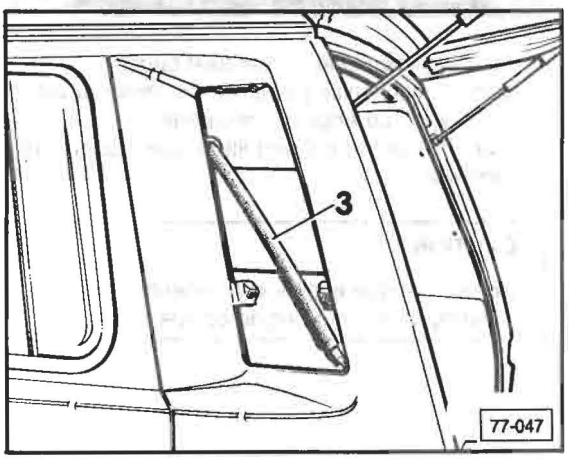

— remove evaporator drain hose **3**

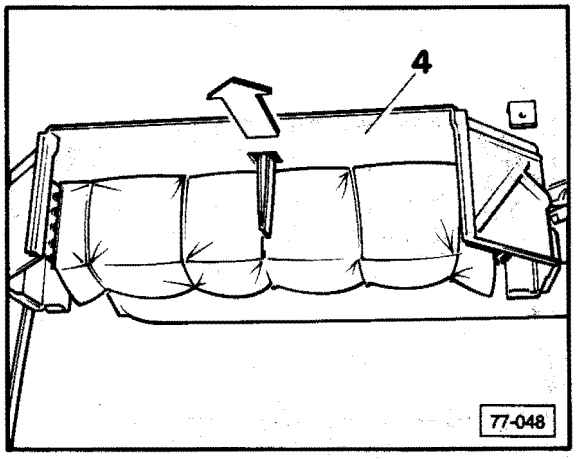

— pull evaporator housing **4** towards front (**arrow**), and remove

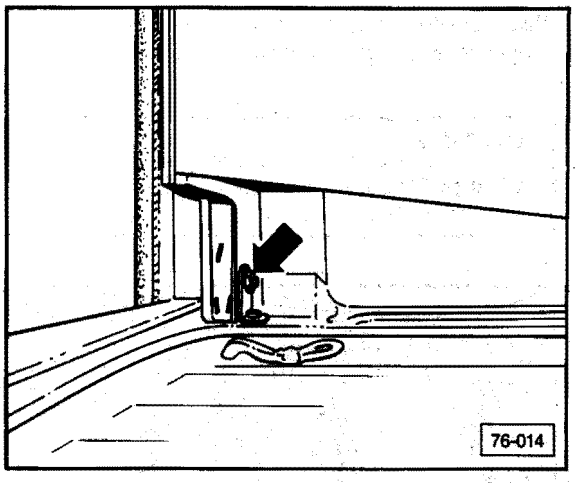

— remove nut (**arrow**) below closet and push bolt out of bracket

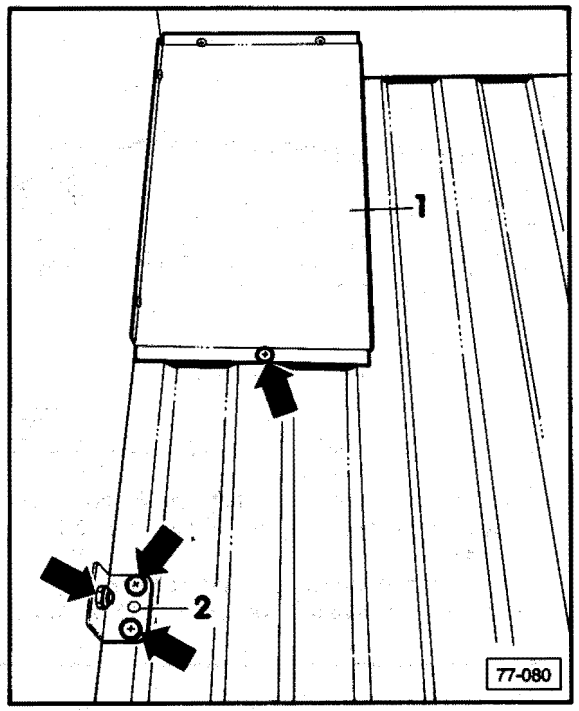

— remove one screw at lower front from support bracket **1** (**arrow**)
— remove one nut at support bracket **2** and push bolt out
— remove two screws from engine compartment deck and remove floor support bracket **2**

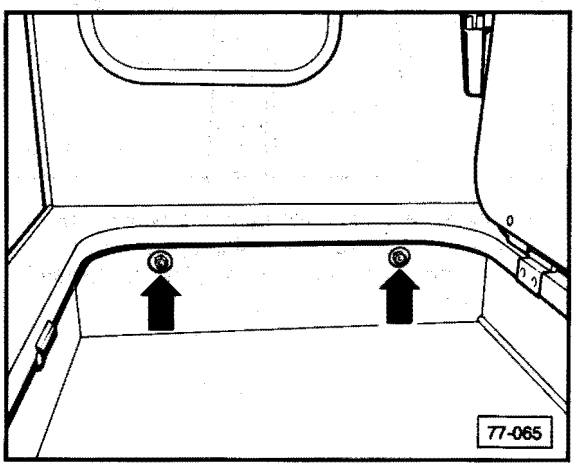

— remove both nuts in stowage pan of storage chest and push bolts through chest and clothes closet

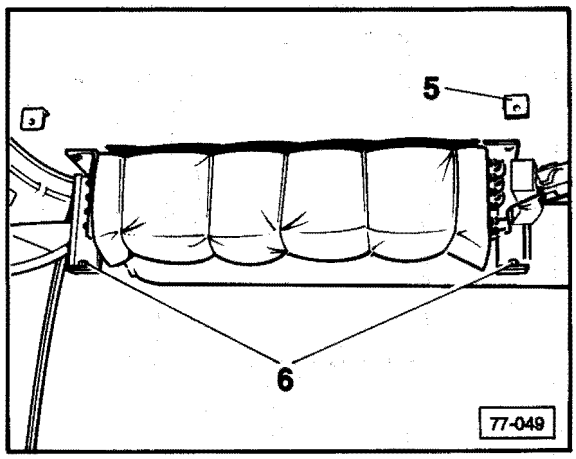

— remove support bracket in left front **5** and support bracket in left and right rear **6** from rear bed board
— loosen stop for bench seat and pull bench seat with backrest forward approximately 10 cm (4 in.)

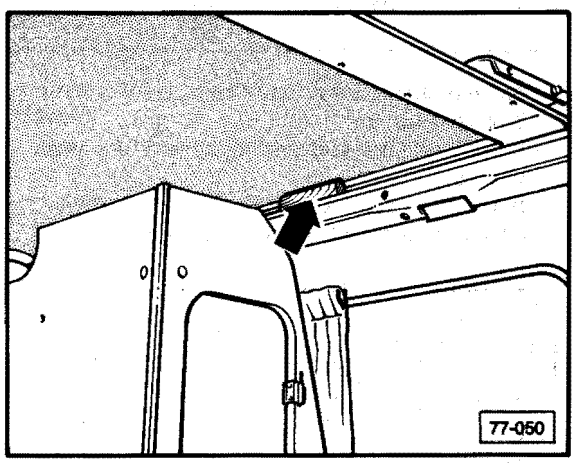

— unscrew seven left and right bed board screws
— lift rear bed board on left side approximately 15-20 mm (3/4 in.) with wedge from underneath **(arrow)**

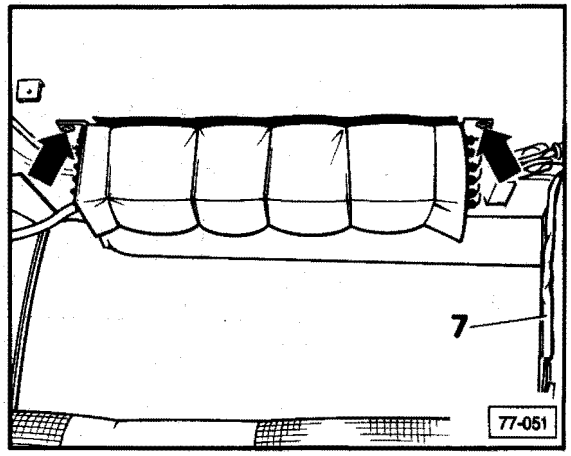

— remove two evaporator mounting screws **(arrows)**

Note

This procedure may require a second technician to support evaporator and wiring harness **7**.

CAUTION

Wear protective gloves when holding evaporator.

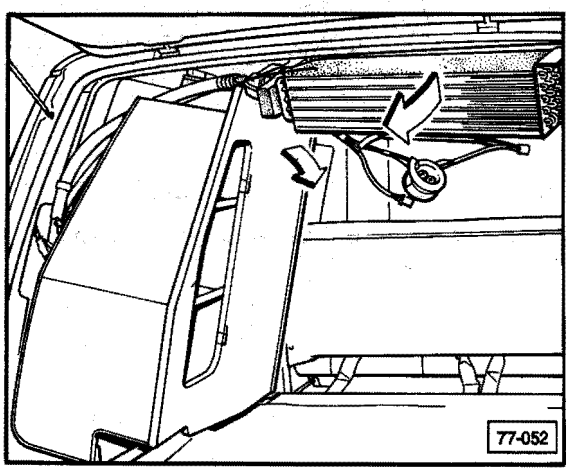

— lower evaporator slightly
— swing clothes closet to left and swing out evaporator to rear at same time
— remove clothes closet

Clothes closet, installing

— install in reverse order

Storage chest with water tank, removing

Note

Storage chest with water tank can be removed after rear bench seat, See Repair Group 77.

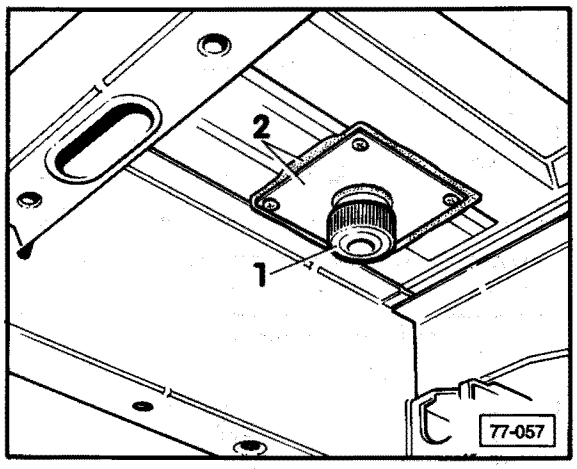

— remove water tank drain pipe cap **1** under left center bottom panel and drain water tank
— remove waterdrain cover plate and seal **2**

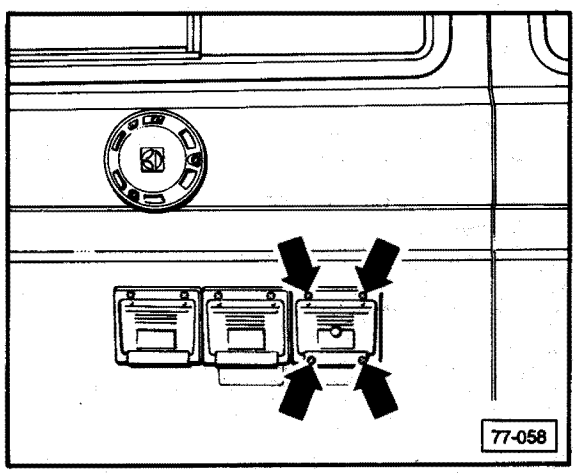

— remove four screws (**arrows**) from water filler cover plate
— pull filler neck out to access hose clamp
— loosen clamp for water filler hose **3**
— remove ventilation hose **4** and remove water filler hose from filler neck
— open storage locker lids and door of storage chest and remove
— remove chest divider

CAUTION

Before working on any part of electrical system, disconnect battery ground strap.

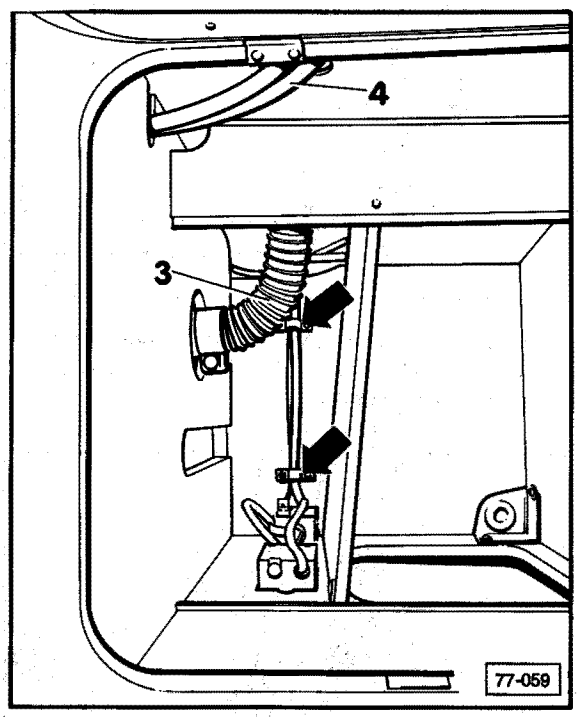

— pull water filler hose **3** and ventilation hose **4** into storage room of chest
— remove two clamps from electric cable (**arrows**) from bottom panel

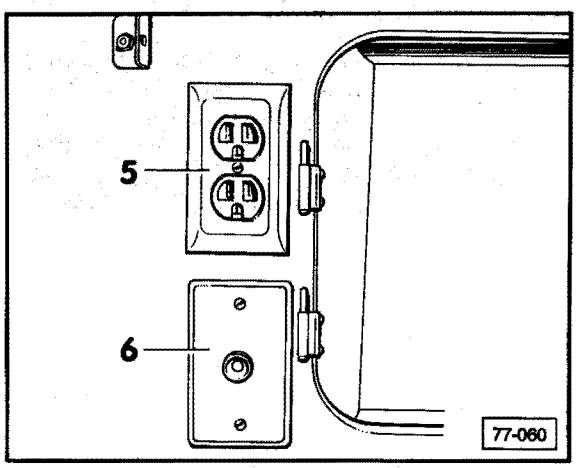

— remove wall outlet cover **5**
— remove cover with fuse from circuit breaker **6** and remove cable connnections from fuse

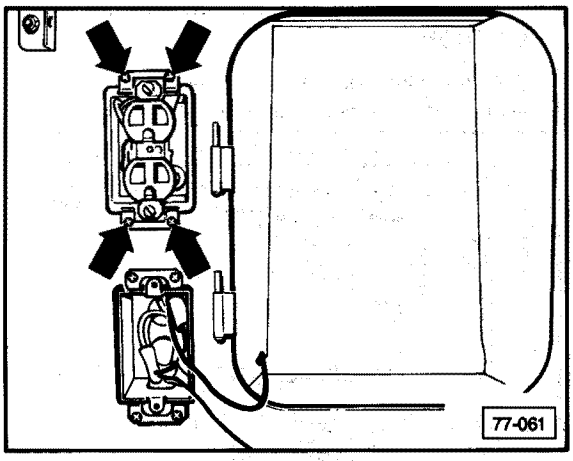

— remove four screws (**arrows**) from socket mount
— remove socket housing, tilt 90° backward and push back into recess

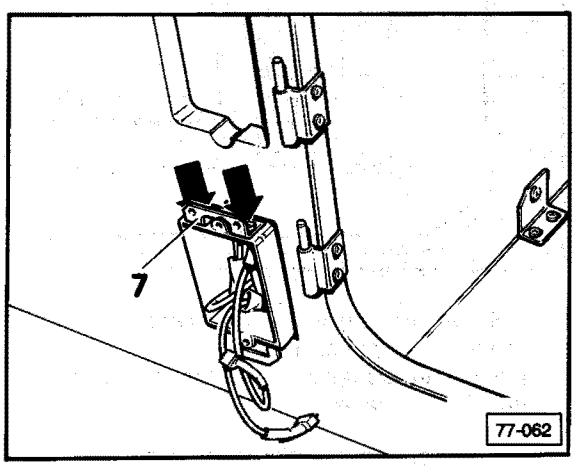

— remove four screws from circuit breaker housing
— remove circuit breaker housing far enough for screws (**arrows**) to be exposed
— loosen both screws (**arrows**) and remove upper support bracket **7**
— push circuit breaker housing back into recess

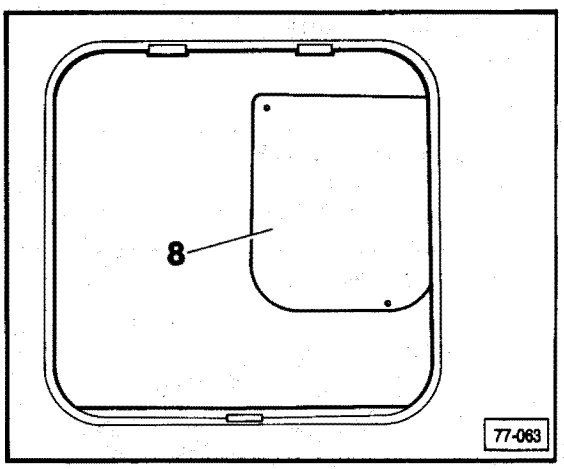

— unscrew two screws and remove cover plate **8**

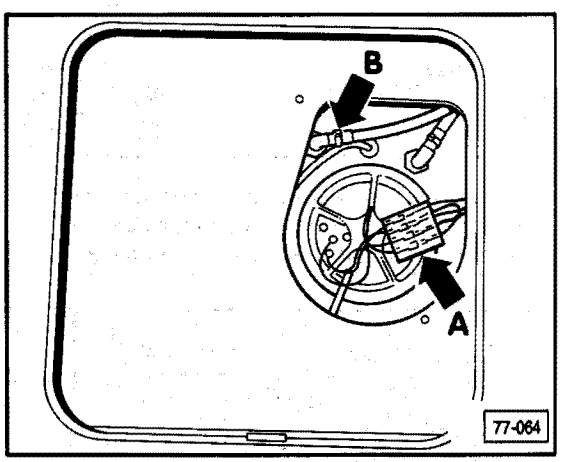

— remove four wire connections from plug terminal (**arrow A**)
— release clamp (**arrow B**) and remove water hose

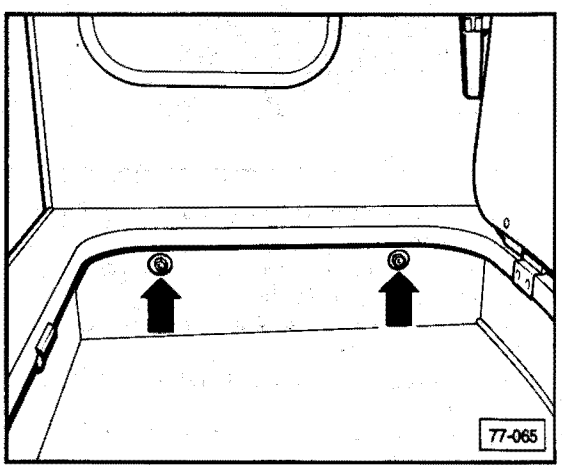

— remove two nuts (**arrows**) in storage space of chest and push bolts through chest and clothes closet

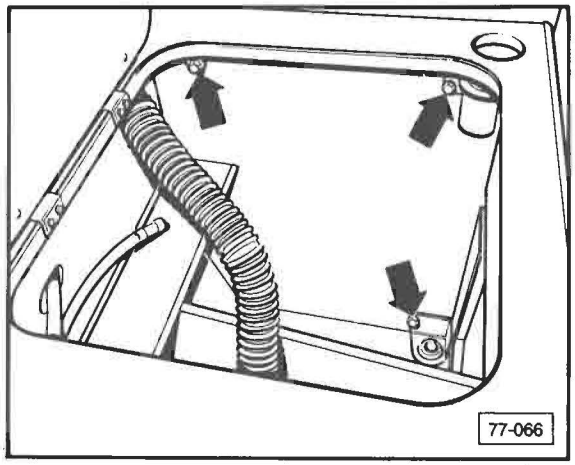

— remove three bolts from sink cabinet (**arrows**)
— lift chest with water tank approximately 10 cm (4 in.) and pull out

Storage chest with water tank, installing

— install in reverse order
— check all water connections for leaks

Water faucet with pump switch, removing

Note

Up to Equipment No. **C.000 858**.

— remove kitchen cabinet drawer
— remove cabinet door
— disconnect battery ground strap

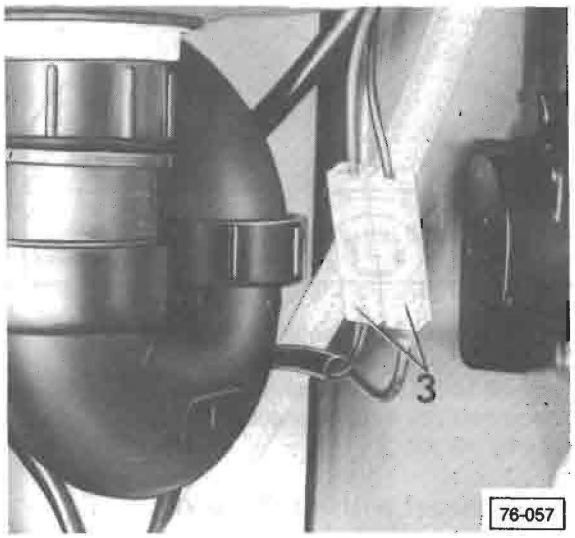

— disconnect 12V DC electric connection from pump switch at plug terminal **3**

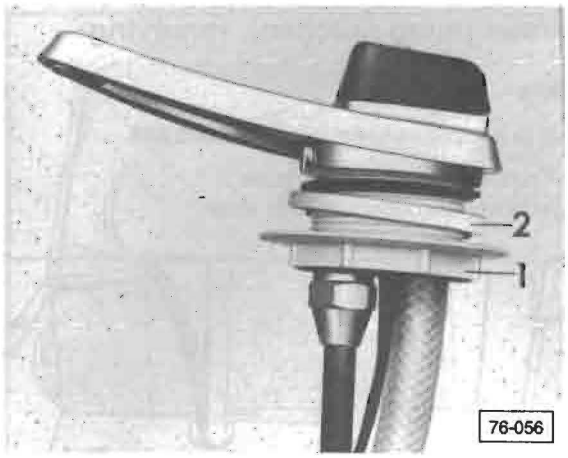

— remove plastic nut **1** and pull off with spacer **2**



— remove faucet from counter
— disconnect city water connection **4** and disconnect hose **5**

Water faucet with pump switch, installing

Note

Warm hose **5** prior to pushing onto water faucet.

— install in reverse order

Water pump (kitchen), removing

Note

Up to equipment serial number **C.000 858**.

— remove kitchen cabinet door
— disconnect battery ground strap

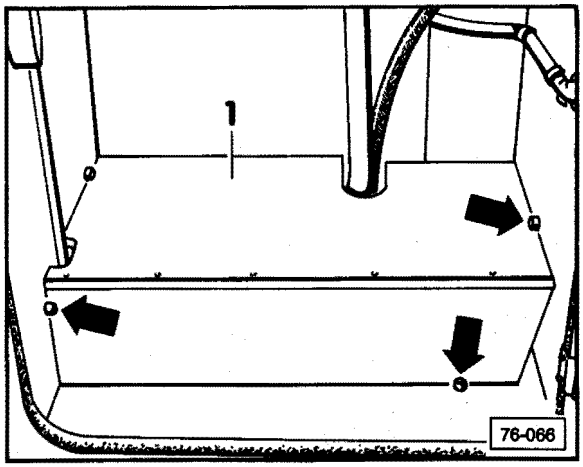

— pull out three pump cover keepers (**arrows**)
— remove cover **1**

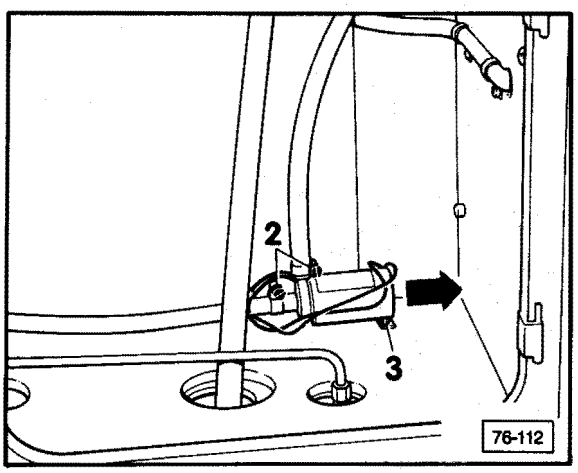

— disconnect 12V DC wire connections at pump lead
— loosen hose clamps **2** and disconnect pump hoses
— loosen 2 mounting bracket screws **3** and remove water pump in direction of **arrow**

Water pump (kitchen), installing

— install in reverse order

Note

Be sure to check all fluid connections in pump circuit for leaks.

Water faucet with pump switch, removing

Note

From equipment serial No. **C.000 859**.

— remove kitchen cabinet drawer
— unhinge cabinet door
— disconnect battery ground strap

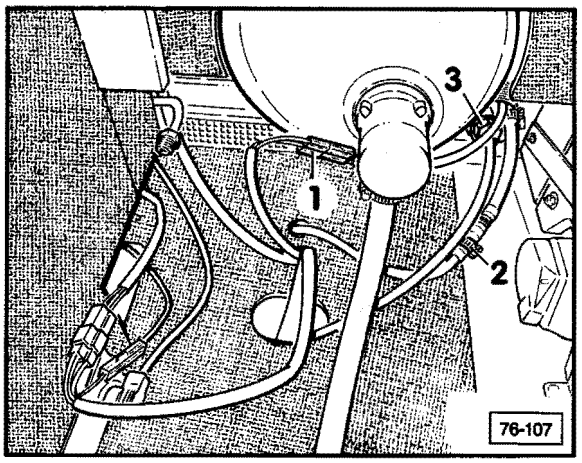

— disconnect 12V DC electric connection from pump switch at plug terminal **1**

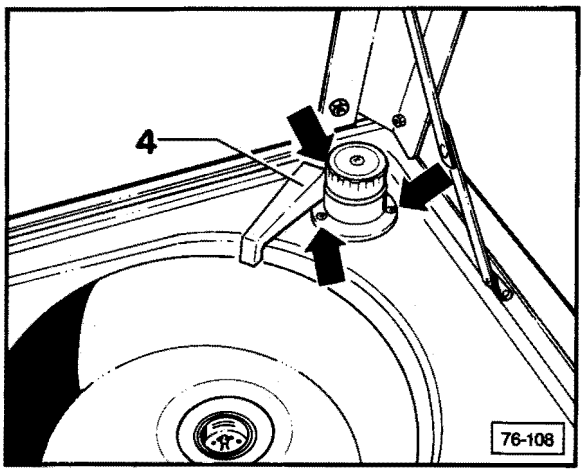

— open cabinet lid and loosen three screws (**arrows**)
— remove faucet **4** from kitchen counter and disconnect city water connection, see fig. 76-107, **3**

Water faucet with pump switch, installing

— install in reverse order

Water pump (kitchen), removing

Note

From equipment serial number **C.000 859**.

— disconnect battery ground strap

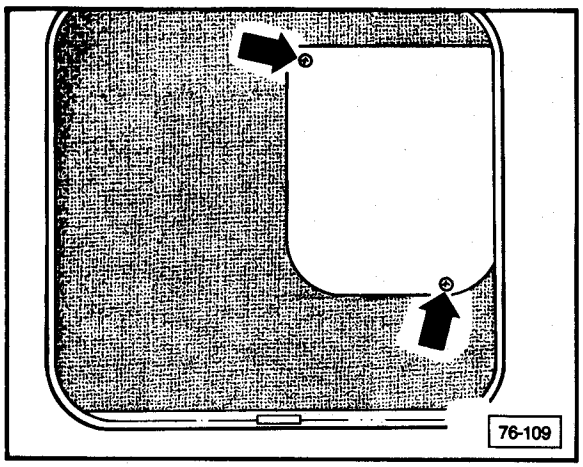

— open left lid of chest and remove cover, two screws (**arrows**)

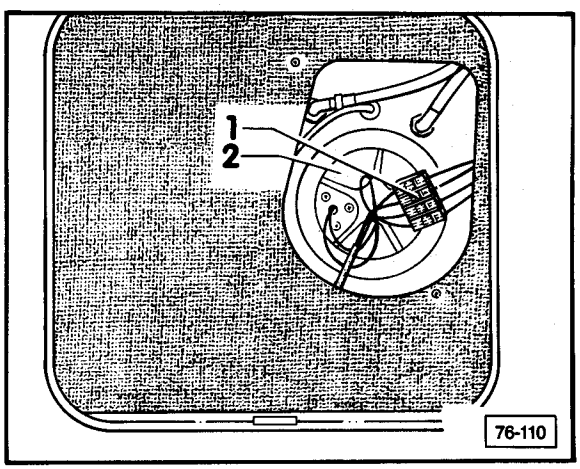

— disconnect 12V DC connections at water pump lead **1**
— turn out water tank cap **2** and remove pump with sensor

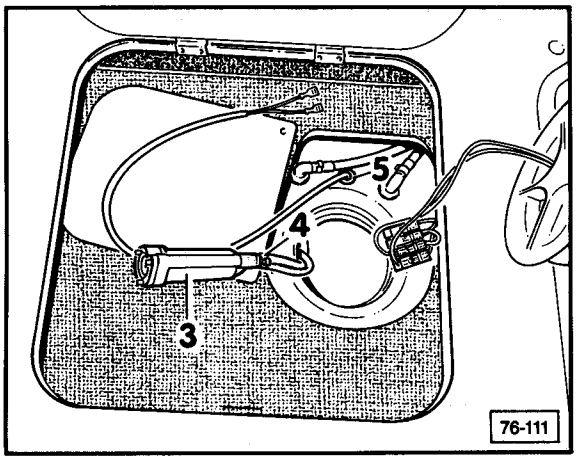

— remove water pump **3** from **tank**, release clamp **4** and disconnect hose
— pull 12V DC wires through rubber sleeve **5** inward to water tank
— remove water pump with leads from tank

Note

Do not cross 12 V DC wire connections. Pump works in one direction only.

Water pump (kitchen), installing

— install in reverse order
— check all fluid connections in pump circuit for leaks

Water level sensor, removing

Note

For vehicles from 1988.

CAUTION

Before working on any part of electrical system, disconnect battery ground strap.

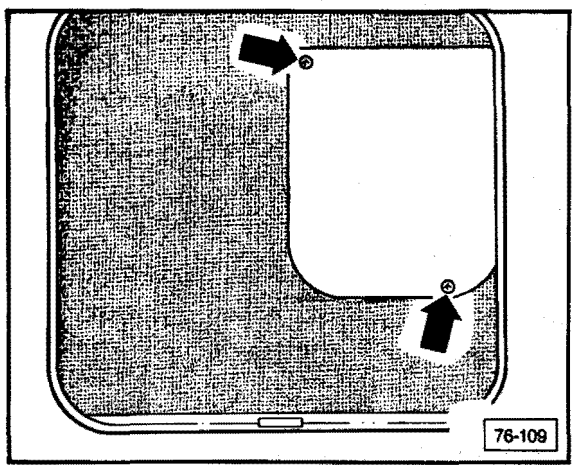

— open left lid of chest and remove cover, two screws (**arrows**)

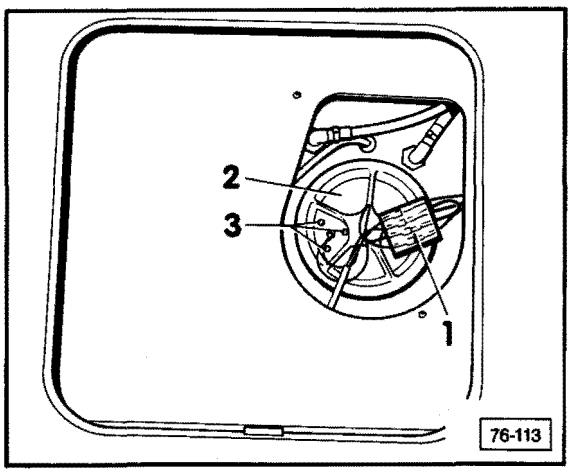

— disconnect 12V DC wire connections from sensor at lead connector **1**
— remove water tank cap **2** and remove with sensor
— remove sensor from water tank lid, three screws **3**

Water level sensor, installing

— install in reverse order

Sink cabinet, removing

Note

On vehicles up to equipment number **C.000 858**, water pump must be removed, see page 76.18. Equipment number can be found on back left side of rear seat.

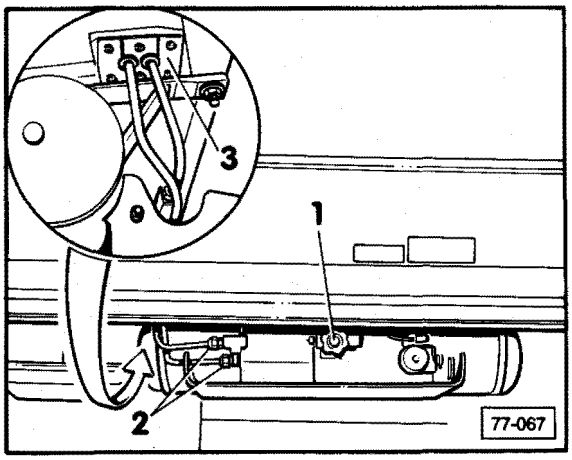

— close propane gas tank valve **1** located under left center floor panel

WARNING

Fire hazard! Do not smoke or have anything in the area that could ignite propane fuel. Ensure adequate ventilation.

— disconnect gas lines at connections **2**
— remove sealing panel **3**, six screws

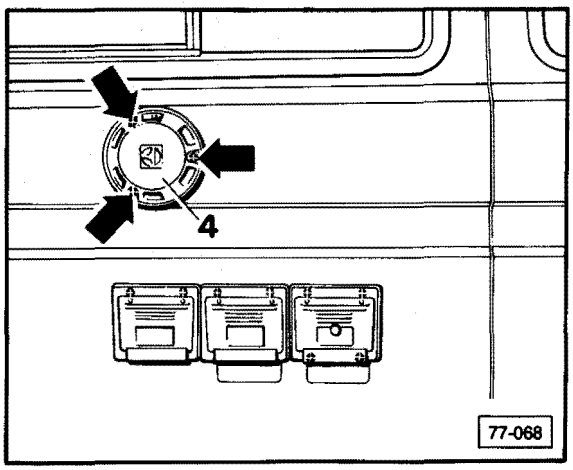

— remove vent cover, **4** washer, mounting plate and gasket

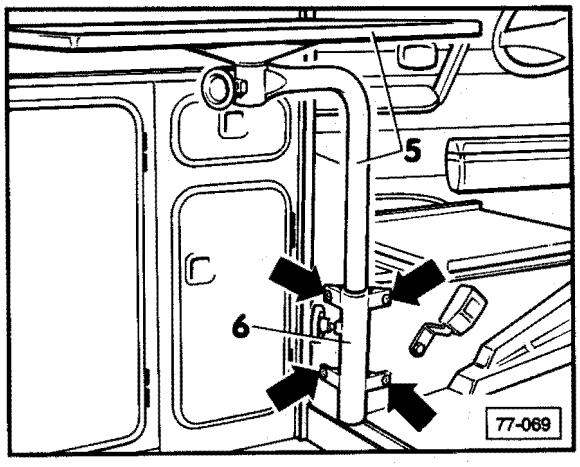

— remove table leg and top **5** from mount **6**
— remove table mount **6**, four screws (**arrows**)

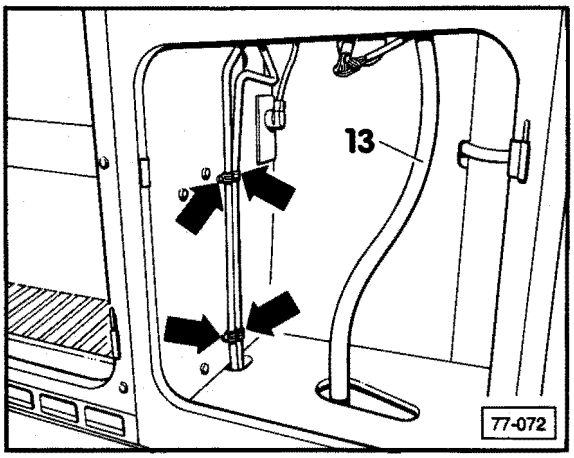

— remove drain hose **13** at bottom
— remove four clamps **arrows**

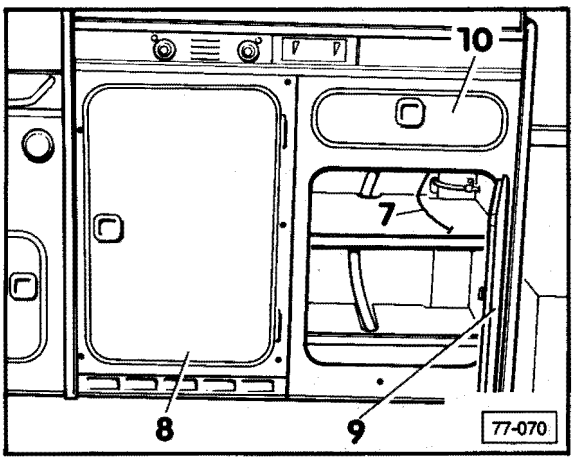

— remove retainer strap for sink cabinet door **7**
— unhinge refrigerator door **8** and sink cabinet door **9**
— remove drawer **10**

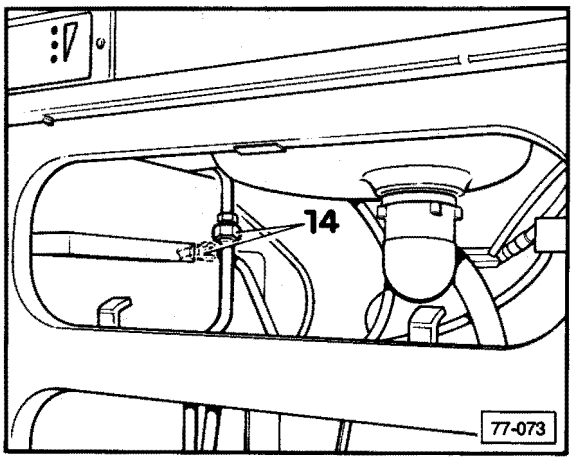

— disconnect gas lines at union nuts **14** and remove

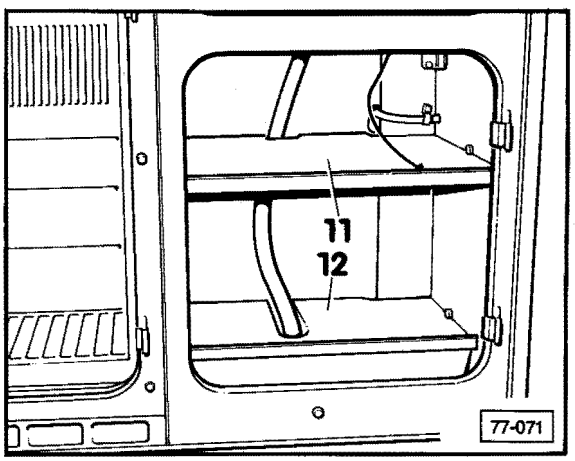

— remove shelf **11** and water pump cover **12**

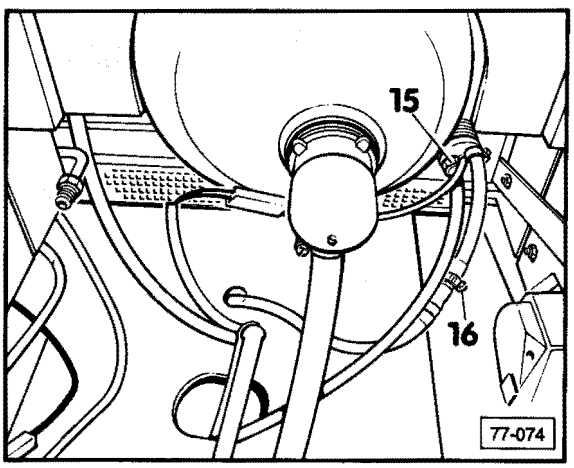

— remove water hose **15** from faucet
— remove hose clamp from valve **16** and disconnect hose

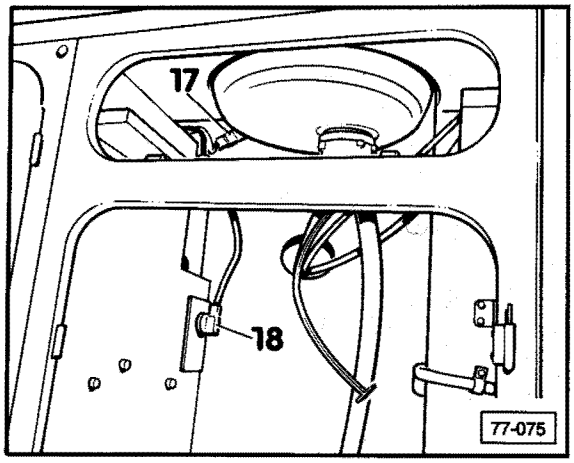

CAUTION

Before working on any part of electrical system, disconnect battery ground strap.

— disconnect 12V DC water pump switch connection **17**
— pull 110 disconnect V.A.C. wire from refrigerator **18**
— remove cover from 110 V.A.C. outlet
— remove 110 V.A.C. socket (four screws)

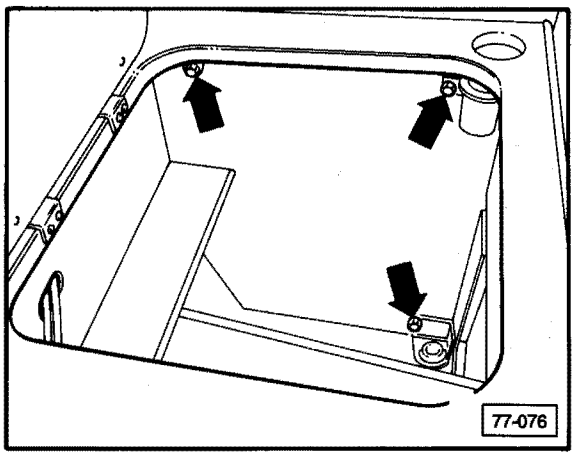

— remove three bolts (**arrows**) from side wall of chest

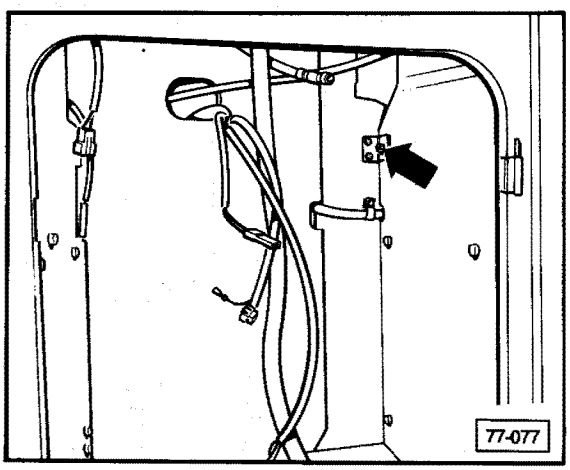

— remove nut (**arrow**) from wall support bracket and push out bolt

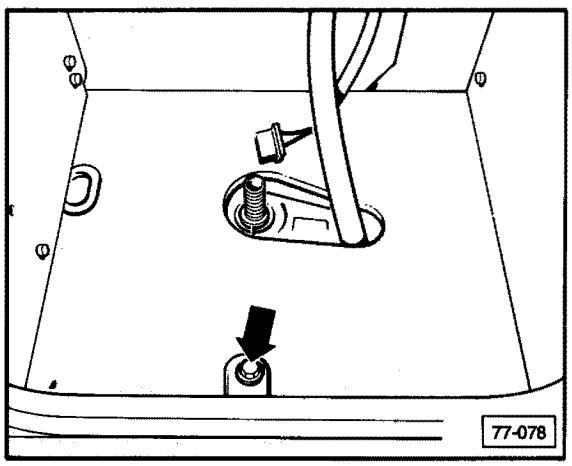

— remove bolt (**arrow**) from floor bracket
— lift sink cabinet and refrigerator over floor stud, towards center of vehicle

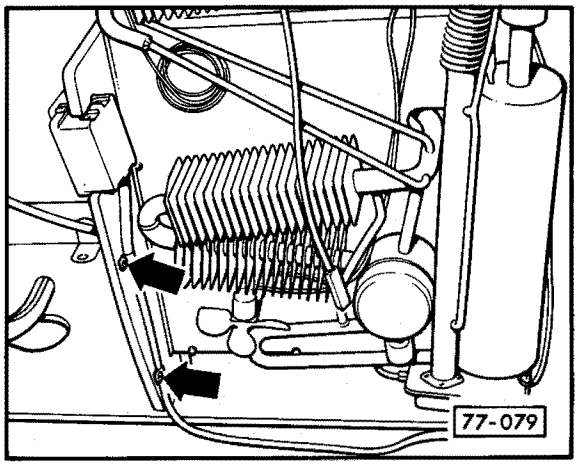

— remove two clamps (**arrows**) from rear of cabinet and remove 110V socket with cable harness.
— lift sink cabinet with refrigerator from vehicle

Sink cabinet, installing

WARNING

If propane gas lines are opened during repair work, a pressurized leak test must be performed, prior to returning the vehicle to service. Use soap water or equivalent to check all fittings.

— install in reverse order of removal

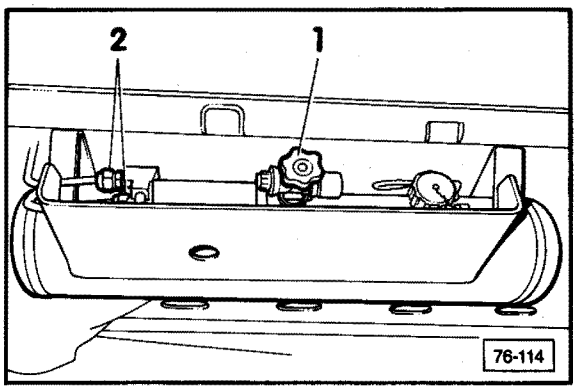

Propane tank, removing

— close valve **1**
— disconnect line fittings **2**

WARNING

During repair work on any part of electrical system, the electrical hook-up for 110/220 volt power source **must** be disconnected.

WARNING

Fire hazard! Do not smoke or have anything in area that can ignite propane fuel. Ensure adequate ventilation.

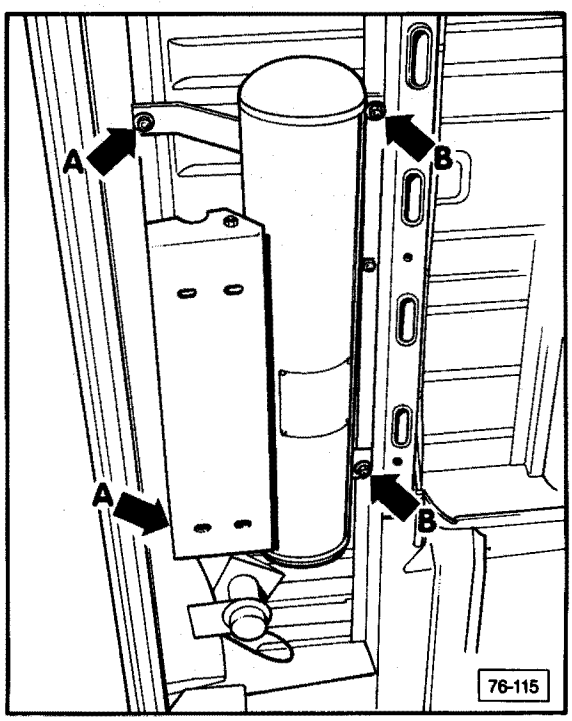

— remove nuts (**arrows A**) and loosen nuts (**arrows B**)
— remove propane tank

Propane tank, installing

— install in reverse order, noting the following

WARNING

Always replace self-locking nuts. After installing gas lines, check all fittings for leaks. Apply soap solution to joints and watch for bubbles with lines under pressure.

Refrigerator, removing

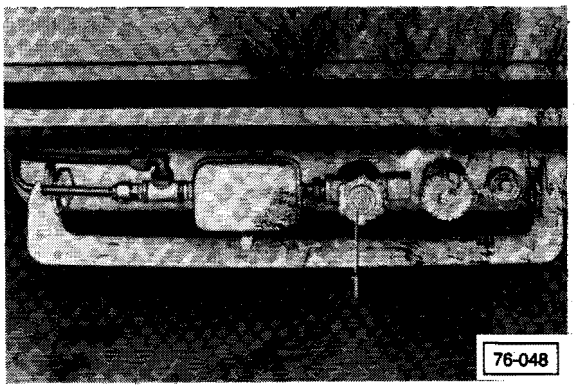

— close valve **1** on propane tank

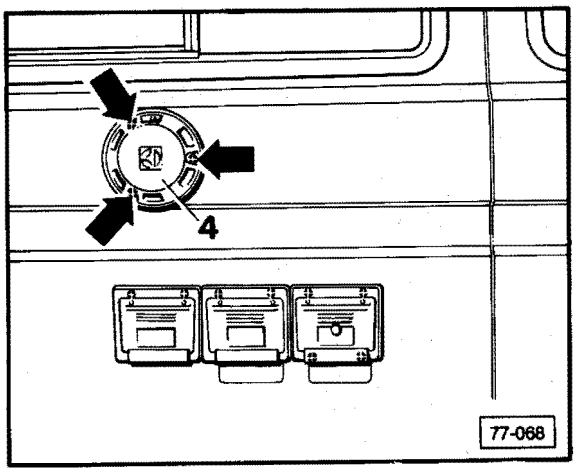

— remove screws (**arrows**) and remove vent cover **4**
— remove cabinet doors and drawer
— remove shelf

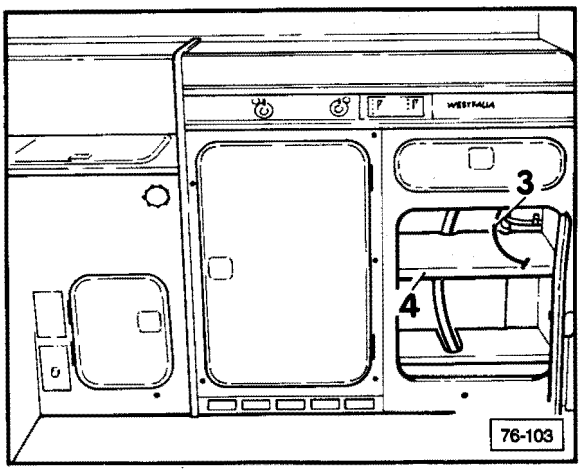

— remove strap **3**
— remove cabinet and refrigerator doors
— remove drawer
— remove shelf **4**

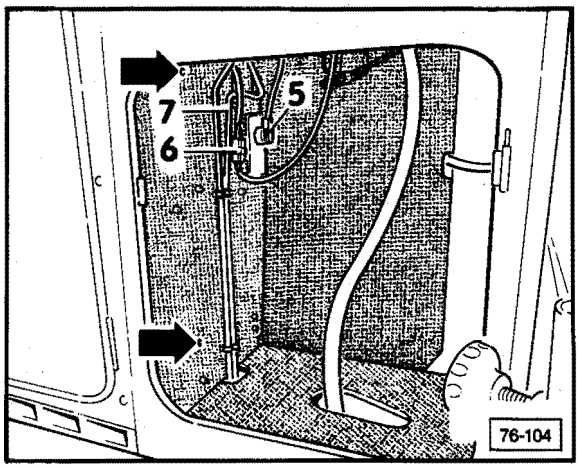

WARNING

During repair work on any part of electrical system, the electrical hook-up for 110/220 volt power source **must** be disconnected.

WARNING

Fire hazard! Do not smoke or have anything in area that can ignite propane fuel. Ensure adequate ventilation.

CAUTION

Before working on any part of electrical system, disconnect battery ground strap.

— remove plug **5** for 110 volt AC supply
— disconnect connector **6** for refrigerator
— place wiring harness on top of refrigerator
— disconnect gas pipe **7**
— remove both screws (**arrows**)

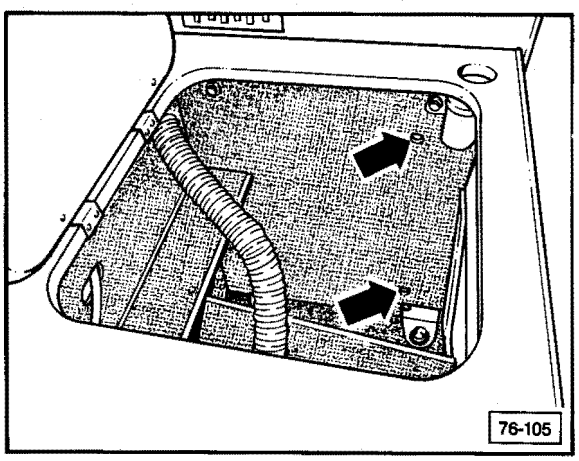

— remove shelf in storage chest and screws (**arrows**)

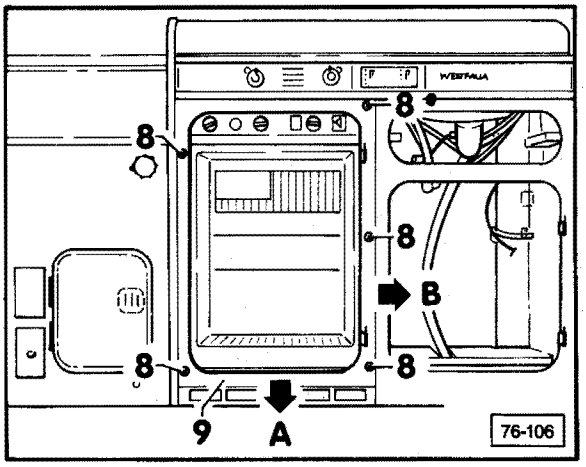

— remove plugs **8** in cover plate **9** and remove screws
— remove cover plate **9** by pulling lower part forward (**arrow A**) and then to side (**arrow B**)
— remove refrigerator

Note

Ventilator must slide easily out of air duct.

Refrigerator, installing

— install in reverse order

WARNING

After installing gas lines, check all fittings for leaks. Apply soap solution to joints and watch for bubbles with lines under pressure.

Refrigerator air supply modification (Dometic 182 models)

Note

When troubleshooting ignition problems on the refrigerator unit, verify spark and fuel are adequate prior to performing air supply modification

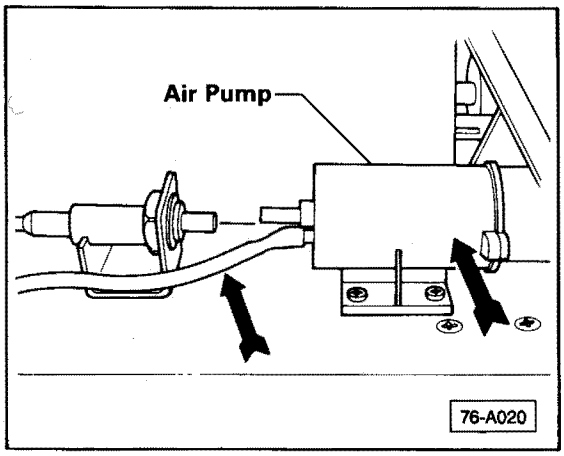

Air pump installed (arrow)

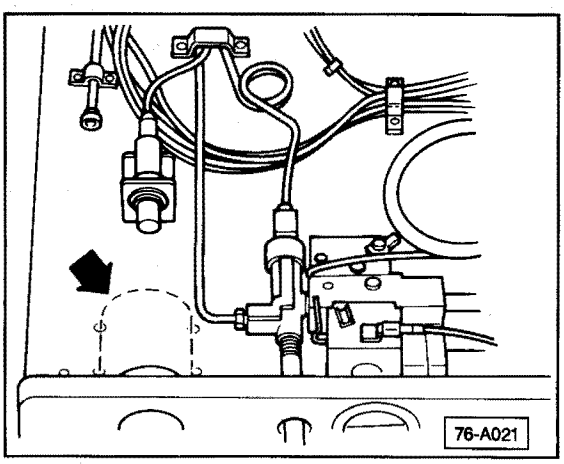

Air pump removed (arrow)

— remove air pump assembly from refrigerator

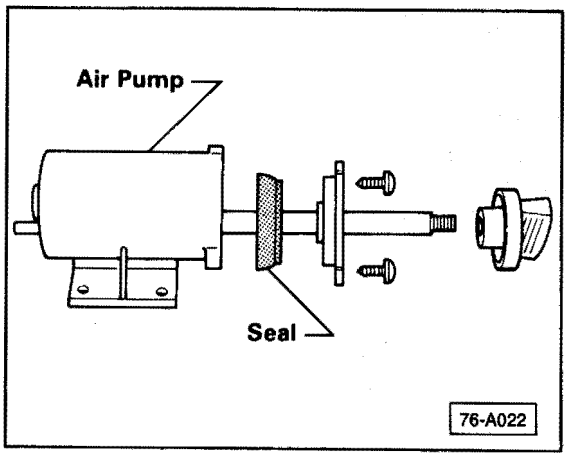

— disassemble air pump

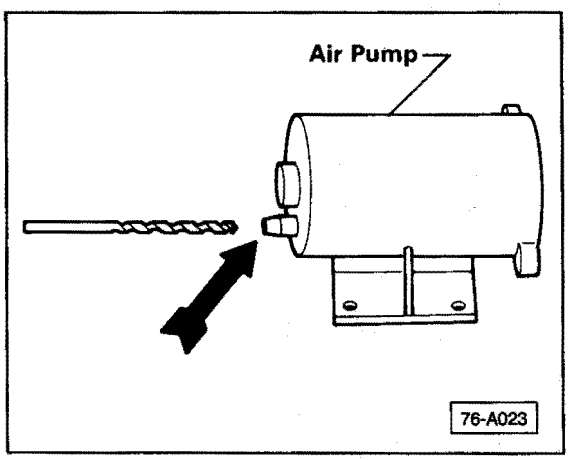

— drill out air outlet (**arrow**) of pump housing, using a #40 drill bit (3.54mm, approximately 9/64 in.)

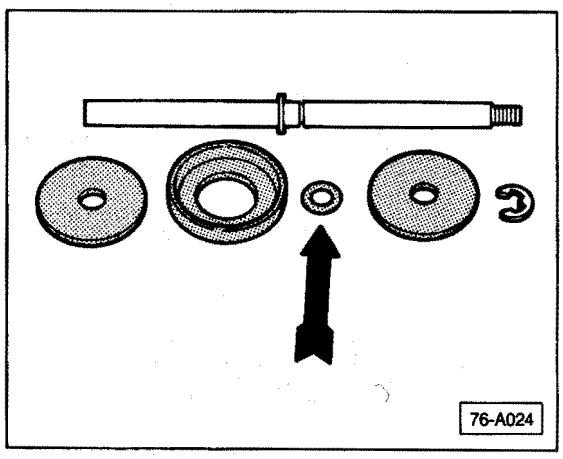

— disassemble air pump piston assembly
- O-ring (**arrow**) is not part of original assembly

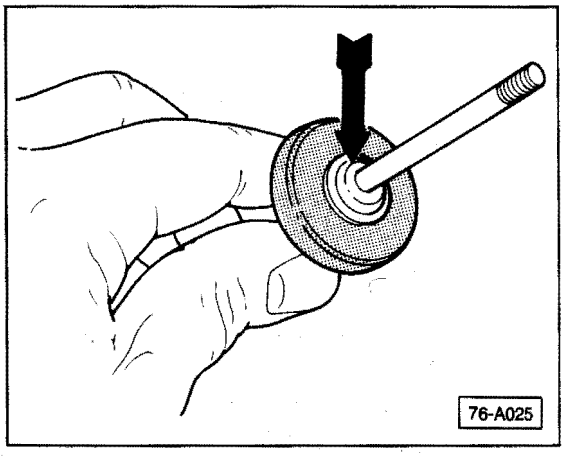

— install O-ring
- O-ring may be obtained at local hardware or auto supply store

— reassemble air pump piston

assembly with circlip in groove approximately mid-shaft (**arrow**)
— reassemble air pump

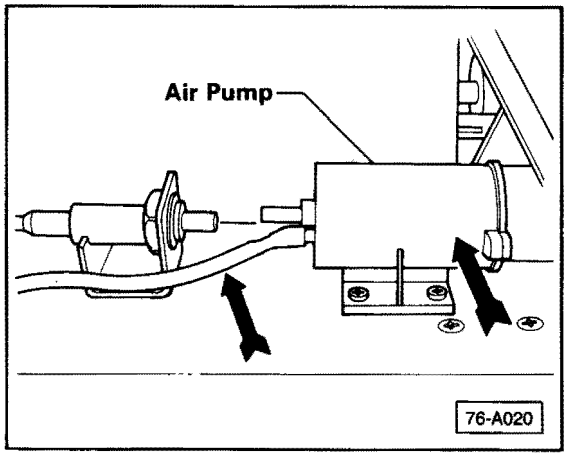

— remove existing plastic air supply line (**left arrow**) with one-way check valve and discard
— reinstall air pump (**right arrow**)

CAUTION

Part numbers are for reference only. Always check with your Parts Department for latest information.

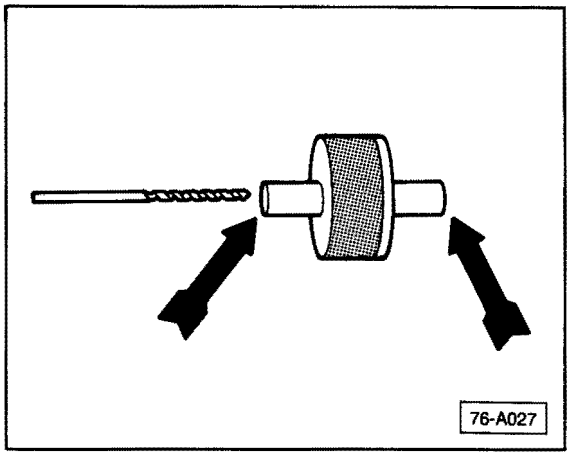

CAUTION

Be careful not to puncture one way valve diaphragm

— drill out one-way check valve **P/N 055 131 101** at inlet and outlet (**arrows**) using a #40 drill bit (3.5mm approximately) 9/64 in.)

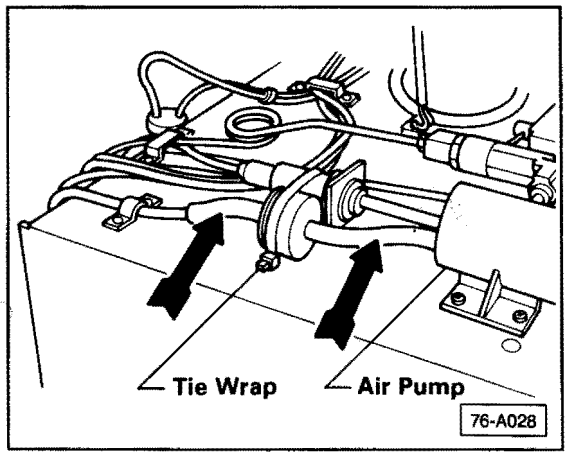

— install replacement one-way valve between two lengths of 4mm (approximately 5/32 in.) ID × 65mm (2.5 in.) long, surgical tubing or equivalent, (**arrows**)

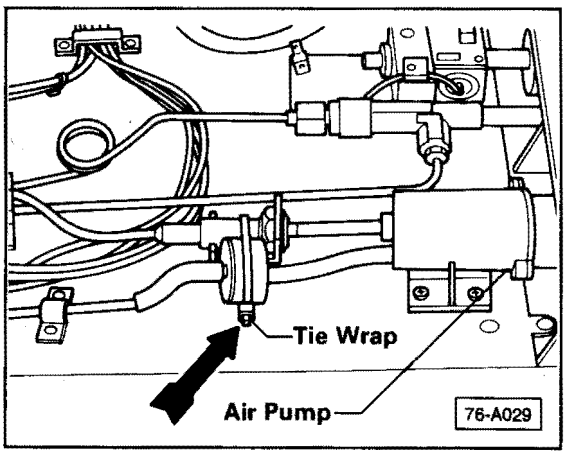

— secure replacement check valve to ignitor with tie-wrap (**arrow**)

CAUTION

To avoid pinching ignitor wire when reinstalling assembly, secure wire with tie wrap to rear of unit.

Index

— Rear seat with storage locker
removing/installing 77.2
— Roof bed, boards
removing/installing 77.3

Rear seat with storage locker, removing

— remove mattress from engine compartment deck

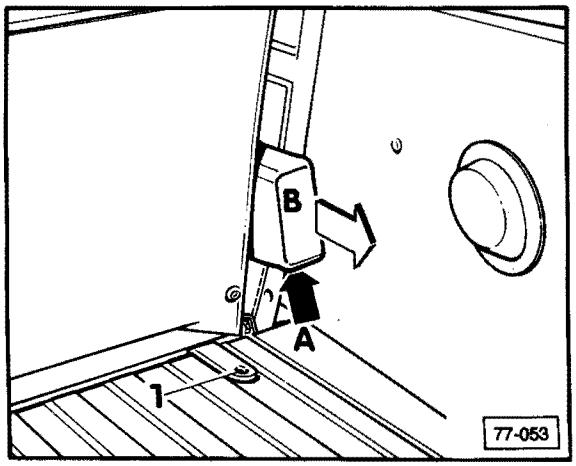

— remove screws **1** from rear seat back-rest bracket on left and right sides
— loosen screws (**arrow A**) from arm rest **B** and pull out toward rear (**upper arrow**)
— lift up rear seat bench
— pull seat belts into storage locker

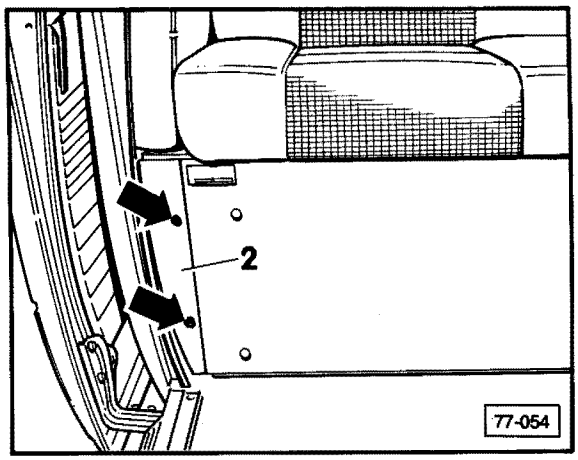

— pry off caps (**arrows**), remove screws, and cover **2**

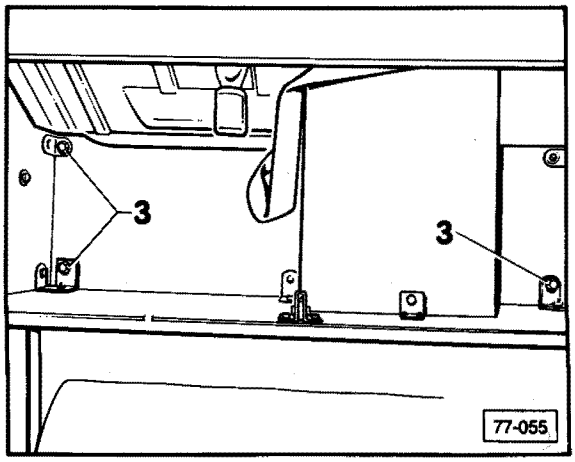

— remove bolts **3** in bottom panel on both sides
— remove bracket on locker

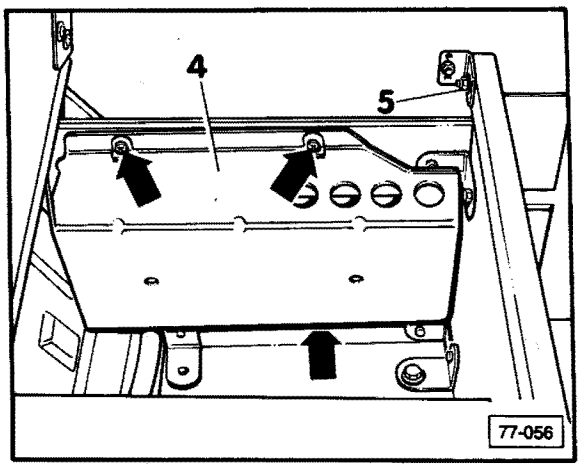

— remove 3 screws (**arrows**) if Digifant equipped
— disconnect Digifant control unit **4**, if applicable
— remove nut **5** on each left and right, push bolts out

— pull out storage locker toward front

CAUTION

Circuit breaker can be easily damaged.

Rear seat with storage locker, installing

— install in reverse order with the following
— check seat mechanism for proper function

Roof bed, removing

Note

For vehicles up to 1984 model year.

Before removing roof-bed, first remove storage shelf, ceiling cabinet and clothes closet, see group 76.

Removing bed boards

Note

Up to model year 1984.

Before bed boards can be removed, storage pan, wall cabinet and clothes closet must be dismantled, see repair group 76.

— Loosen left headliner and remove from retaining rails. See "removal of right air duct, Repair Group 76

Note

From model year 1985.

Before bed boards can be removed, storage pan with curtain molding, left, cover with curtain molding, right, wall cabinet and clothes closet must be dismantled, see repair group 76.

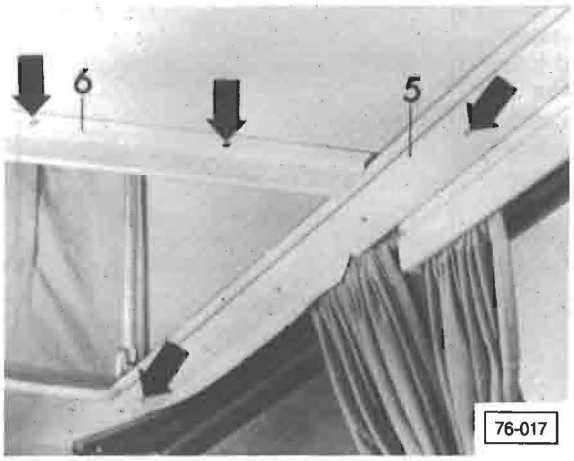

— remove screws (**arrows**) for roof rail **5**
— remove screws (**arrows**) for center roof reinforcement **6**

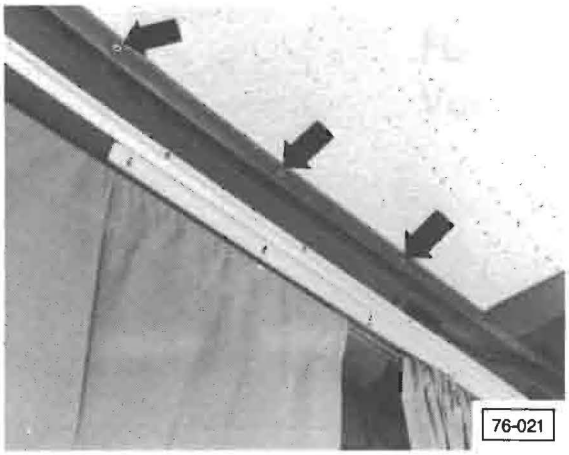

— remove roof-bed board screws (**arrows**)

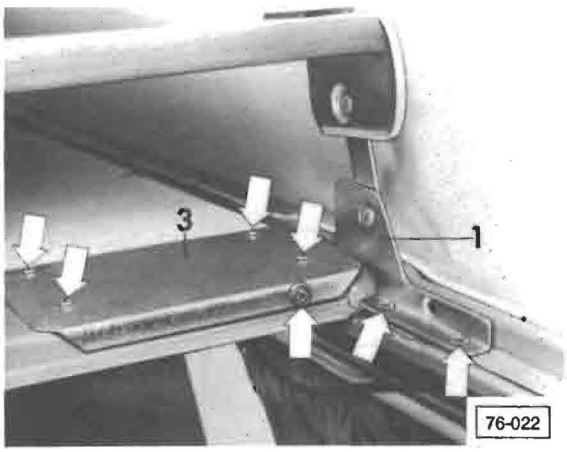

— remove hinge **1** screws (**arrows**) in roof frame
— remove front bed board
— remove screws (**arrows**) for cover plate **3**
— remove rear bed board

Roof bed, installing

— install in reverse order

Heater Ventilation

Quick Data

Index

Additional heater, under rear bench seat
– Water-cooled 80.16
Controls assembly
– Aircooled without fresh air fan 80.5
– Aircooled with fresh air fan 80.8
– Water-cooled 80.12
Flap housing
– Aircooled with fresh air fan 80.10
– Water-cooled 80.14
Heater/Fresh air box housing
– Water-cooled 80.15
Heater control flap cable 80.4
Rear air duct 80.3
System components
– Aircooled 80.2
– Water-cooled 80.11

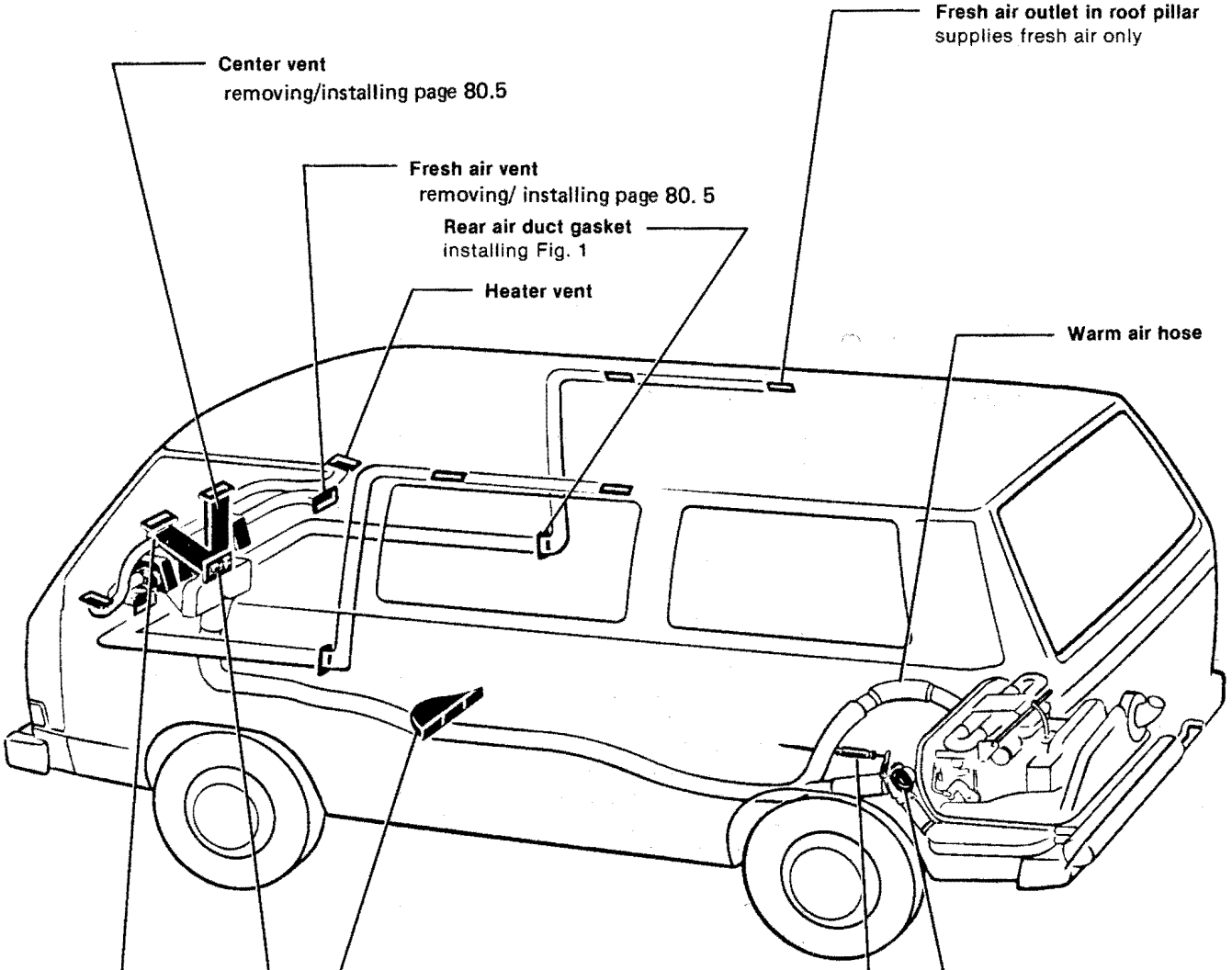
Fresh air outlet in roof pillar
supplies fresh air only
Center vent
removing/installing page 80.5
Fresh air vent
removing/ installing page 80. 5
Rear air duct gasket
installing Fig. 1
Heater vent
Warm air hose
Warm air distributor (passenger compartment)
remove fuel tank to remove
installing Fig. 4
Heater control flaps
adjusting Fig. 2
Heater/Ventilation controls
removing/installing page 80.5
Ventilation chamber/Warm air distributor (driver's compartment)
disassembling/assembling page 80. 5
Heater control flap cable
installing Fig. 3
disassembling/assembling page 80.7

80-212

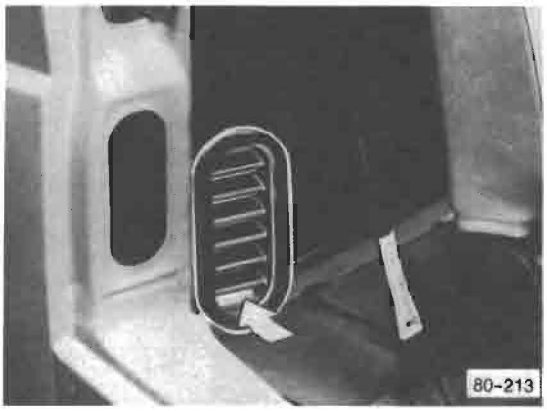

Fig. 1 Rear air duct gasket, installing

— install gasket with louvers pointed down (arrow)

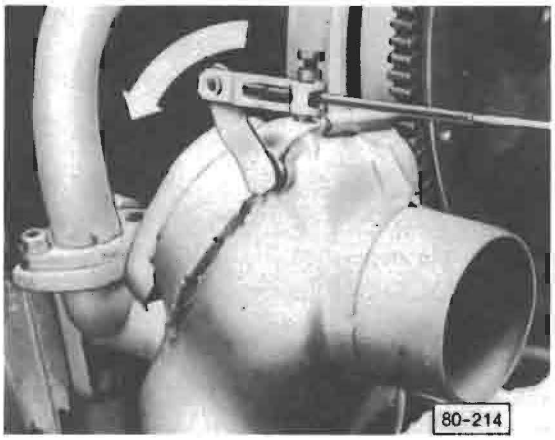

Fig. 2 Heater control flaps, adjusting

— move center heater/ventilation control lever to left side to stop
— check that spring-loaded heater control flap is at end position (arrow)
— tighten clamping bolt on cable in end position

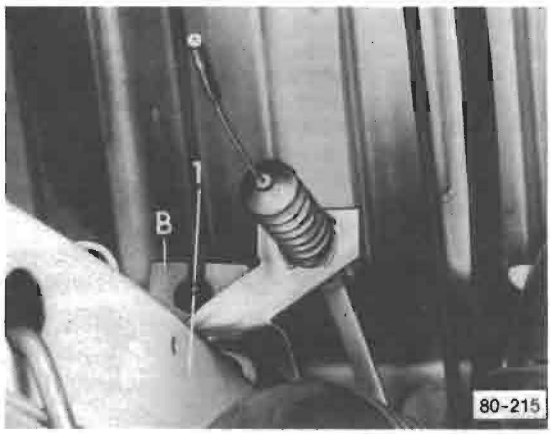

Fig. 3 Heater control flap cables, installing

— install sleeve with cable on bracket **B** in hole **1** (long end of cable to outside of vehicle)

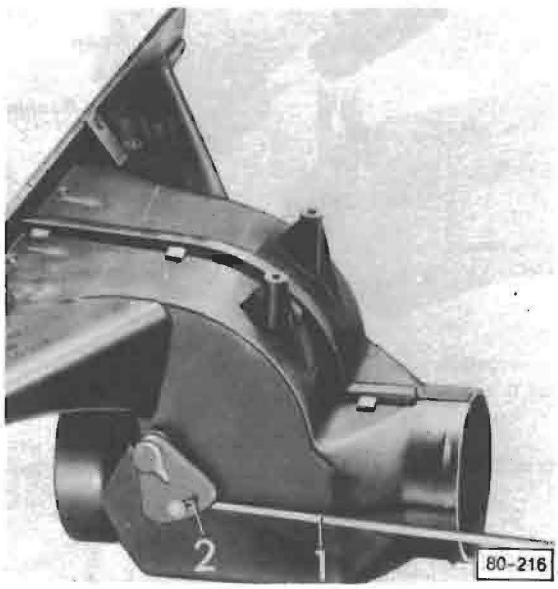

Fig. 4 Warm air distributor for passenger compartment, installing

— first, install connecting rod **1** for cable in slot **2** of lever and secure with circlip

Note

Heater control flap outer cable is pressed in guide sleeve

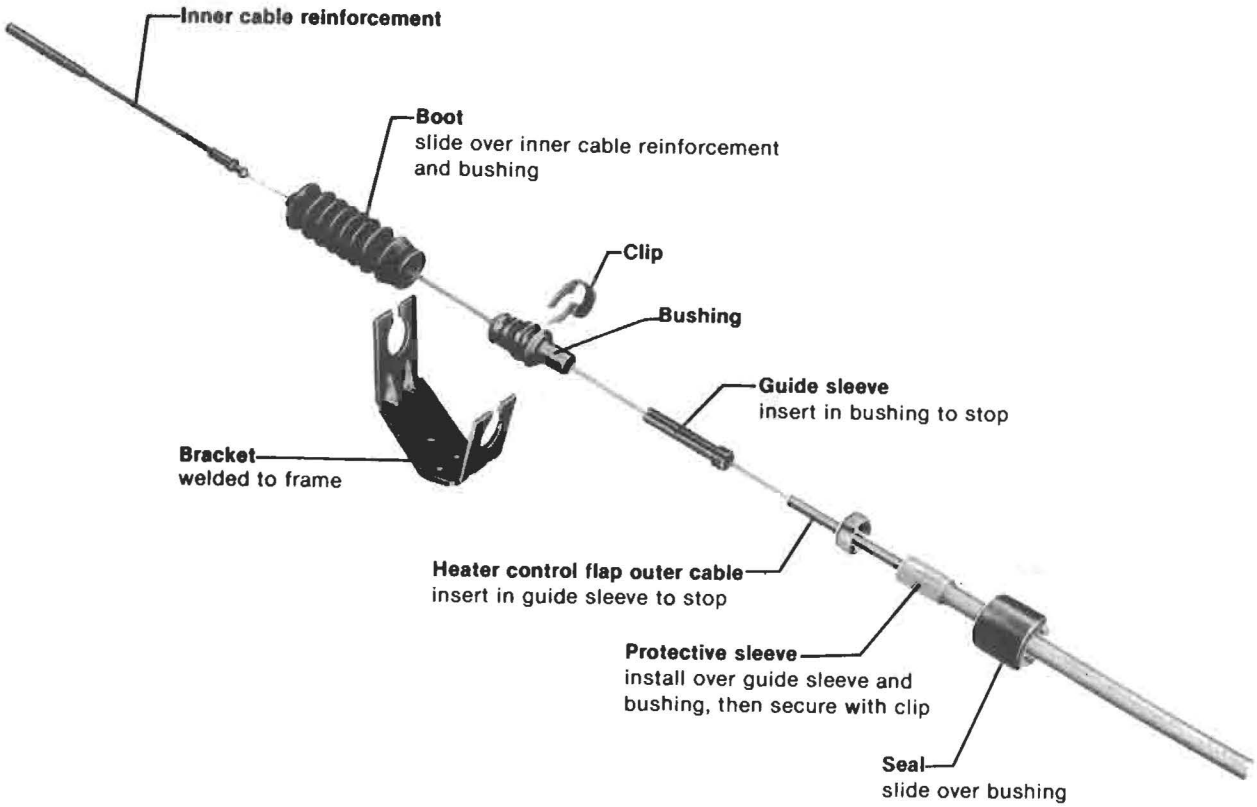

80-211

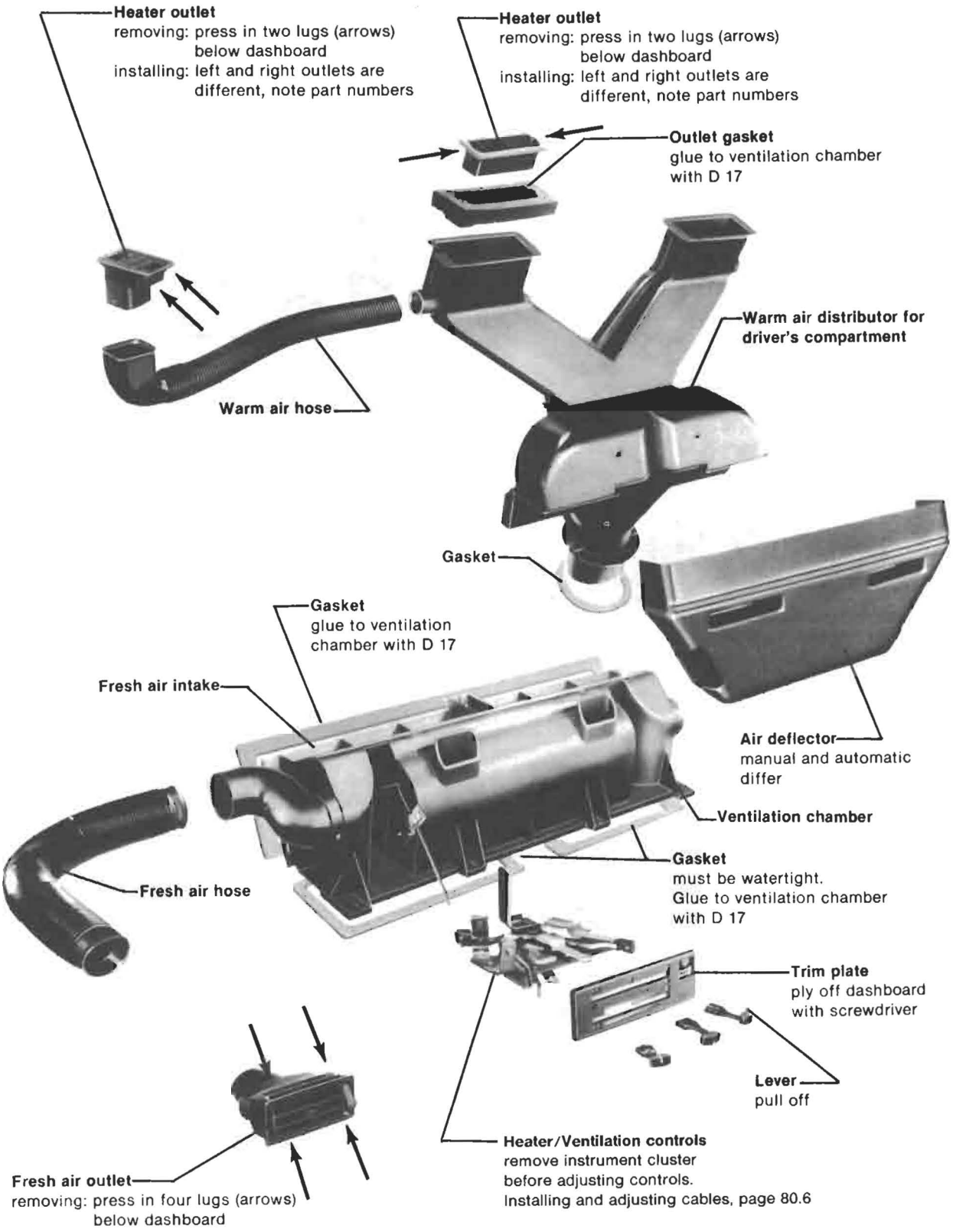
Heater outlet
removing: press in two lugs (arrows) below dashboard
installing: left and right outlets are different, note part numbers
Heater outlet
removing: press in two lugs (arrows) below dashboard
installing: left and right outlets are different, note part numbers
Outlet gasket
glue to ventilation chamber with D 17
Warm air distributor for driver's compartment
Warm air hose
Gasket
Gasket
glue to ventilation chamber with D 17
Fresh air intake
Air deflector
manual and automatic differ
Ventilation chamber
Gasket
must be watertight.
Glue to ventilation chamber with D 17
Fresh air hose
Trim plate
ply off dashboard with screwdriver
Lever
pull off
Heater/Ventilation controls
remove instrument cluster before adjusting controls.
Installing and adjusting cables, page 80.6
Fresh air outlet
removing: press in four lugs (arrows) below dashboard

80-217

Heater/Ventilation controls, installing/adjusting cables

Work sequence

— install controls
— install trim plate
— press on levers
— loosen two heater control flap cables at heater control flaps

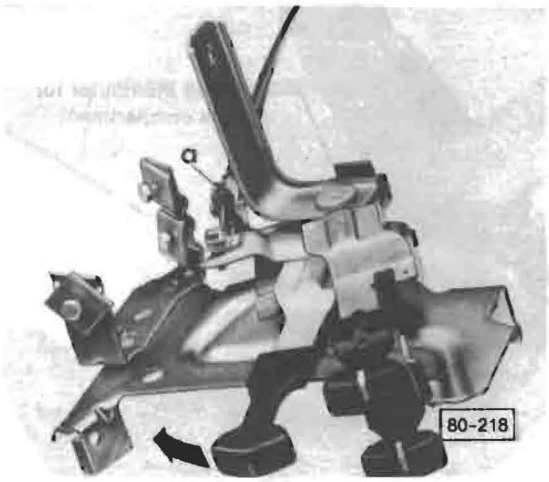

— install both inner cables of heater control flaps in center slide (as shown) and tighten outer cable to controls **a**
— push center control lever to extreme left (arrow)

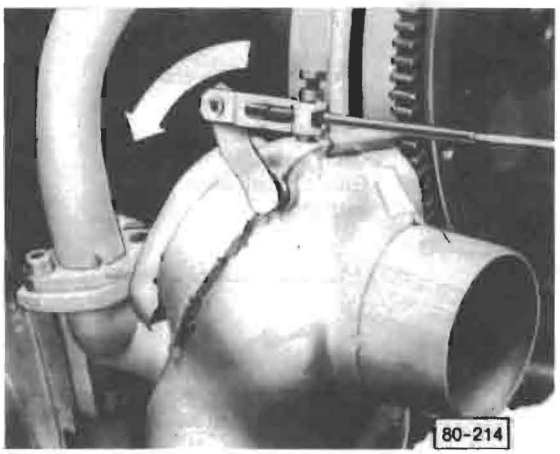

— check that spring-loaded heater control flap is in end position (arrow)
— tighten clamping bolt and lock inner cable in end position

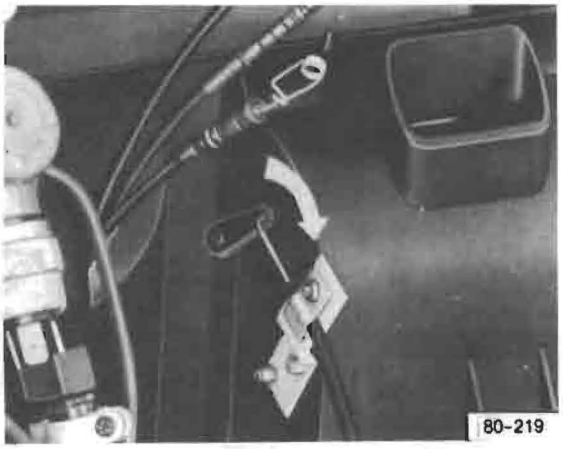

— push lever on ventilation chamber against spring tension (arrow)

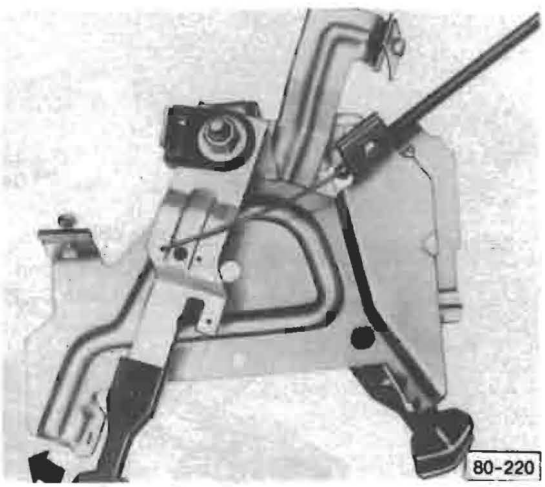

— engage inner cable for ventilation chamber in lower lever
— push lever in direction of arrow toward right side of vehicle
— tighten ventilation chamber outer cable with lever in this position

— go to next page

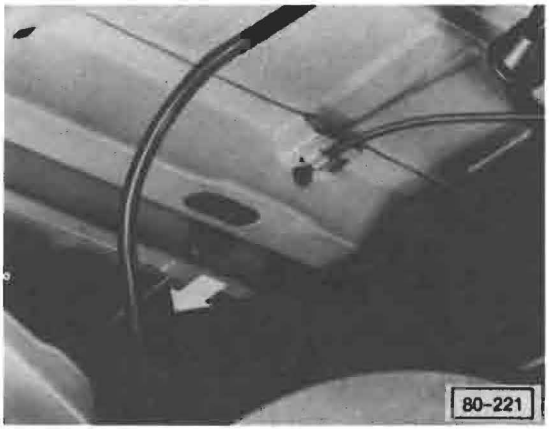

— pull inner cable for warm air distributor (passenger compartment) against spring tension (arrow) toward warm air distributor

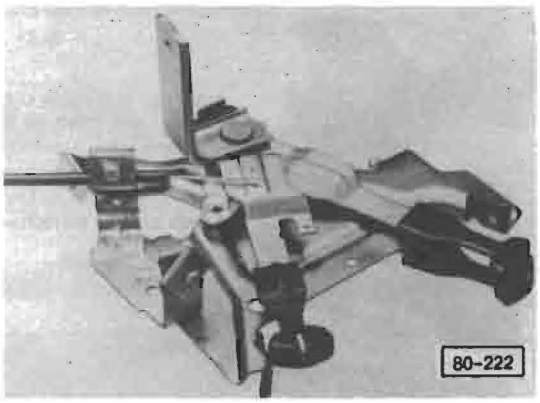

— hook inner cable for warm air distributor (passenger compartment) in upper control lever

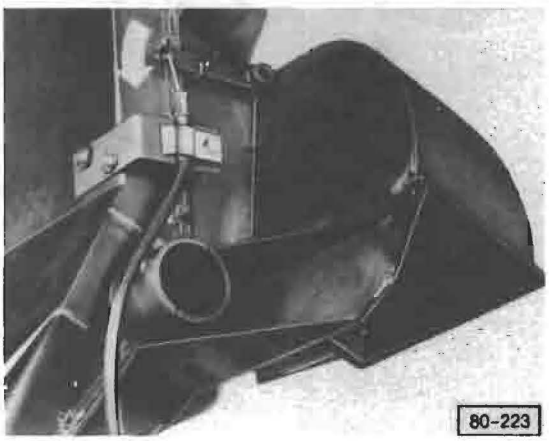

— push control lever on warm air distributor (driver's compartment) in direction of arrow and hold in position

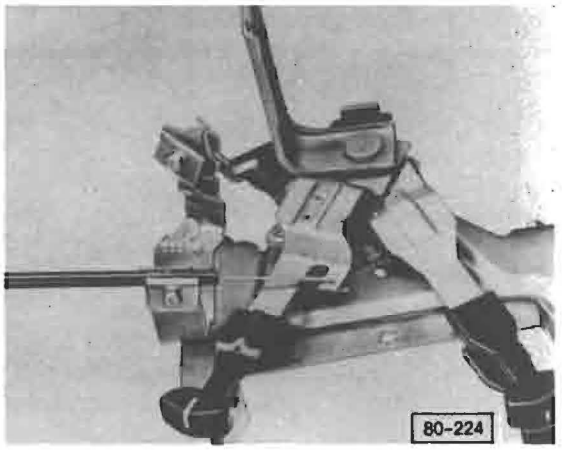

— hook inner cable for warm air distributor (driver's compartment) in upper control lever
— secure outer cable on bracket

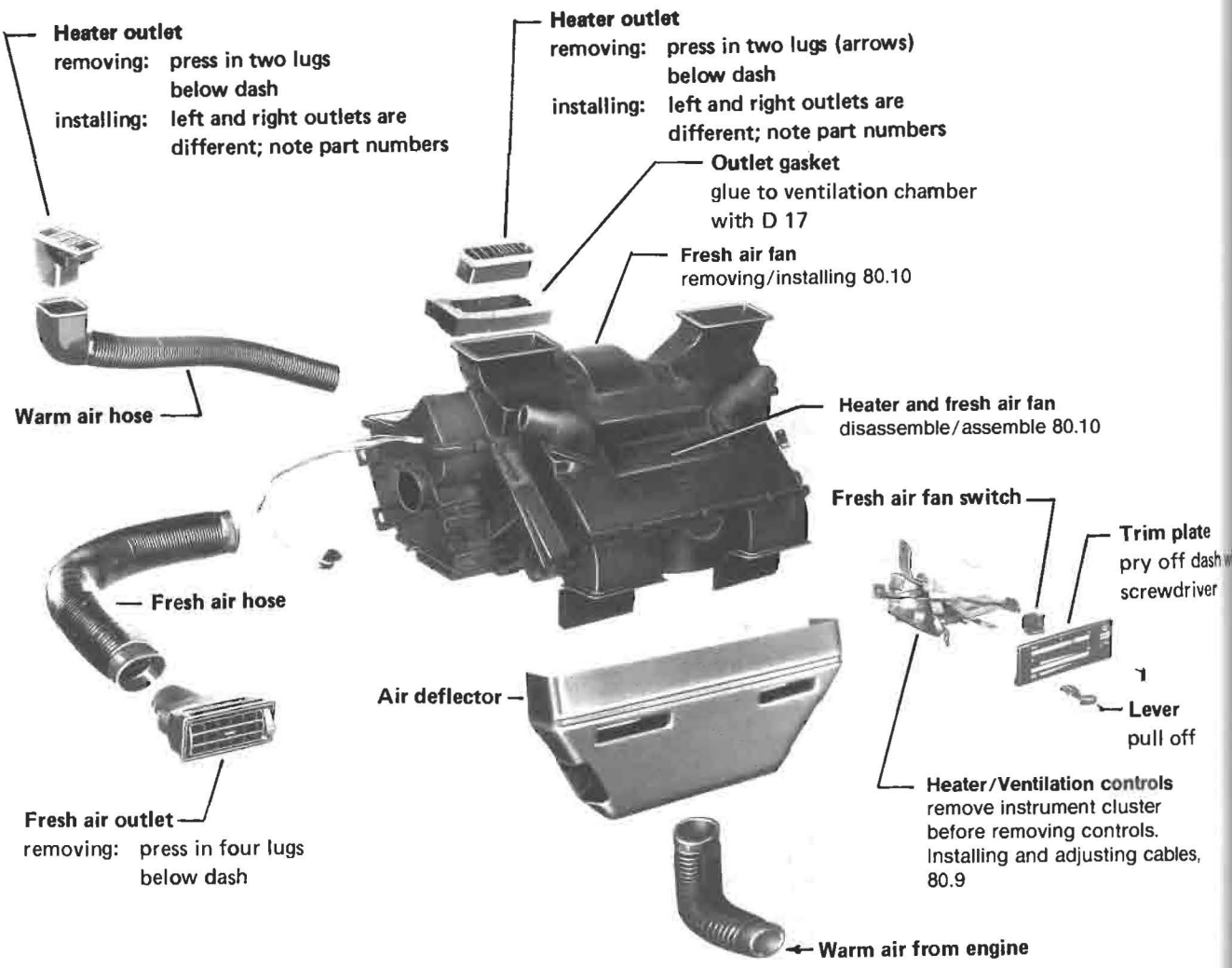
Heater outlet
removing: press in two lugs below dash
installing: left and right outlets are different; note part numbers
Heater outlet
removing: press in two lugs (arrows) below dash
installing: left and right outlets are different; note part numbers
Outlet gasket
glue to ventilation chamber with D 17
Fresh air fan
removing/installing 80.10
Warm air hose
Heater and fresh air fan
disassemble/assemble 80.10
Fresh air fan switch
Trim plate
pry off dash with screwdriver
Fresh air hose
Air deflector
Lever
pull off
Fresh air outlet
removing: press in four lugs below dash
Heater/Ventilation controls
remove instrument cluster before removing controls.
Installing and adjusting cables, 80.9
Warm air from engine

80–261

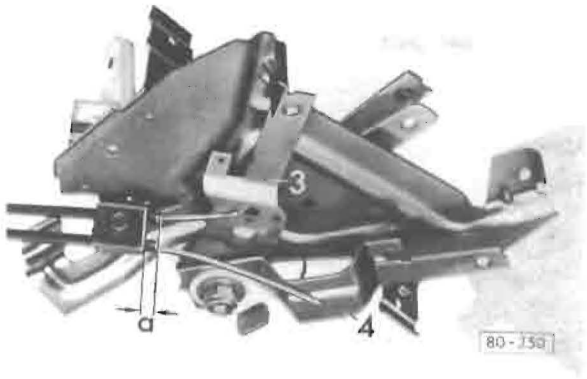

Fig. 1 **Control cables:**
on lever 4 -- passenger-compartment ventilation
(cable conduit has 2 green paint marks and projects out of clamp approx.
a = 3 mm (1/8 in.)

on lever 3 -- main cut-off flap
(cable conduit has green/yellow paint mark and projects out of clamp approx.
a = 3 mm (1/8 in.)

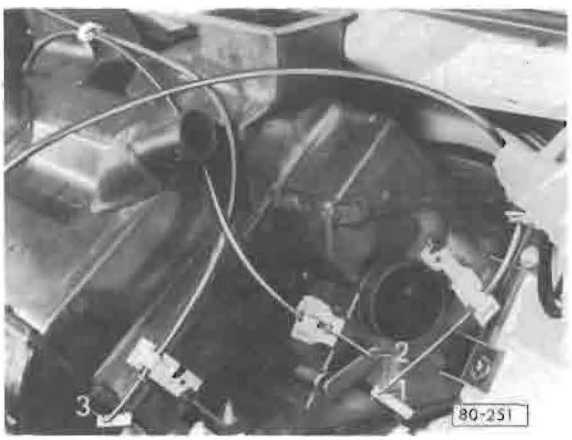

Fig. 2 **Flap-housing cables**
1 – passenger compartment flap
2 – main cut-off flap
3 – defroster flap and footwell flap

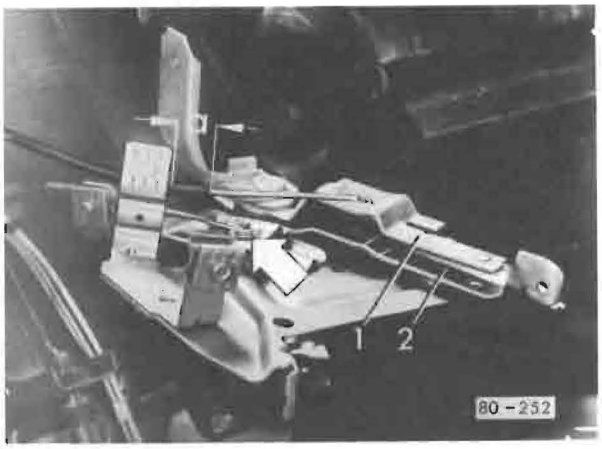

Fig. 3 **Control cable**
on lever 1 – heated air distributor in passenger compartment
cable conduit has red paint mark and projects out of clamp approx. a = max. 30 mm (1 3/16 in.)

on lever 2 – heater flap cable (arrow)

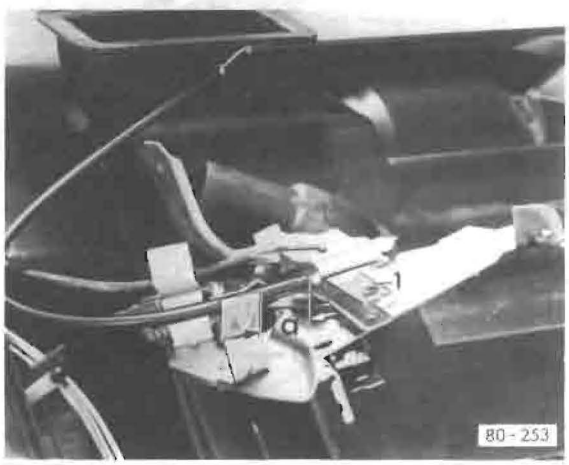

Fig 4 **Control cable**
on lever 1 – defroster/flap footwell flap
cable conduit has red paint mark and projects out of clamp approx. a = 30 mm (1 3/16 in.)

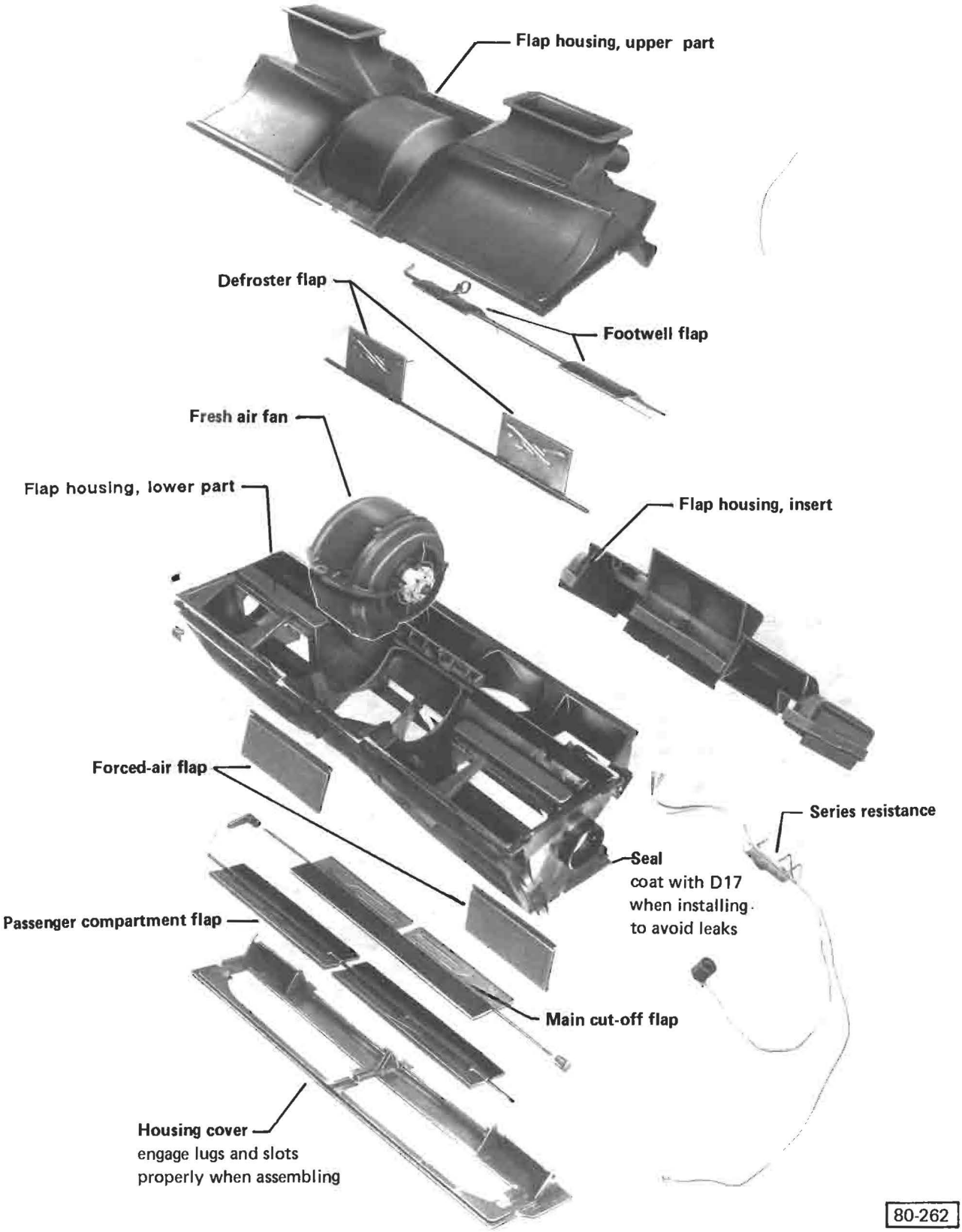

80.10 Flap housing, disassembling/assembling

Air-cooled with Fresh Air Fan

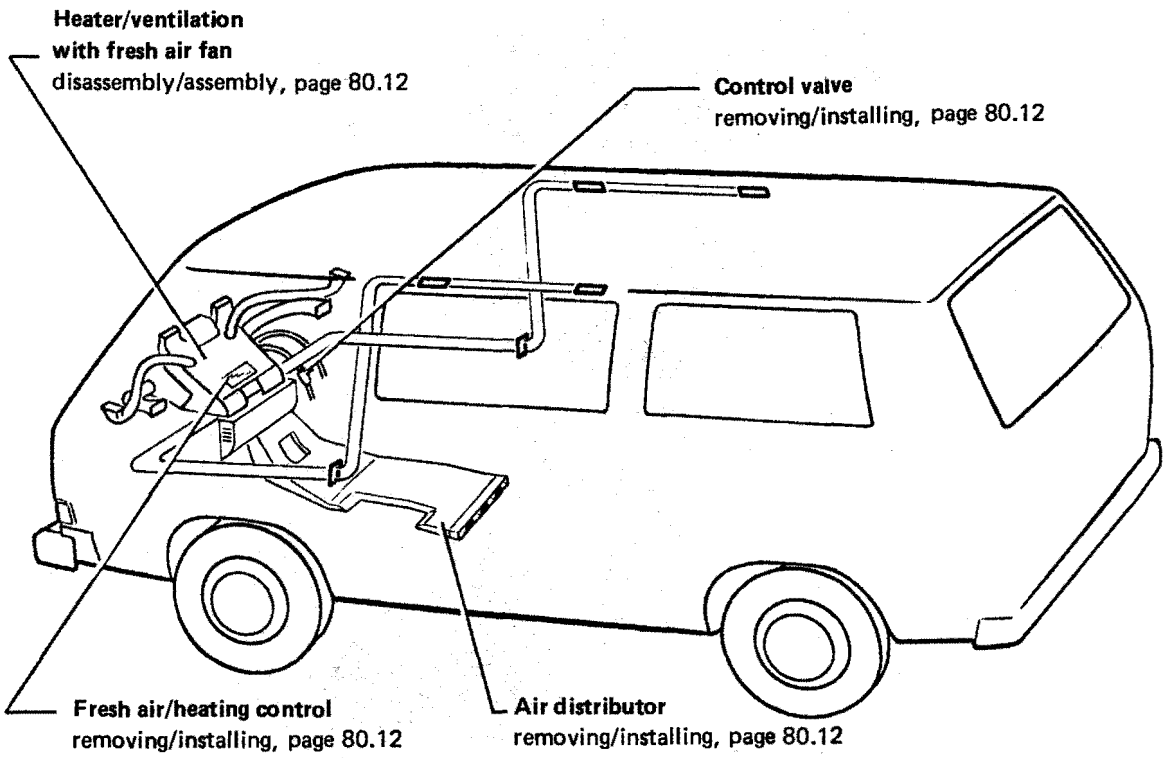
Heater/ventilation
with fresh air fan
disassembly/assembly, page 80.12
Control valve
removing/installing, page 80.12
Fresh air/heating control
removing/installing, page 80.12
Air distributor
removing/installing, page 80.12

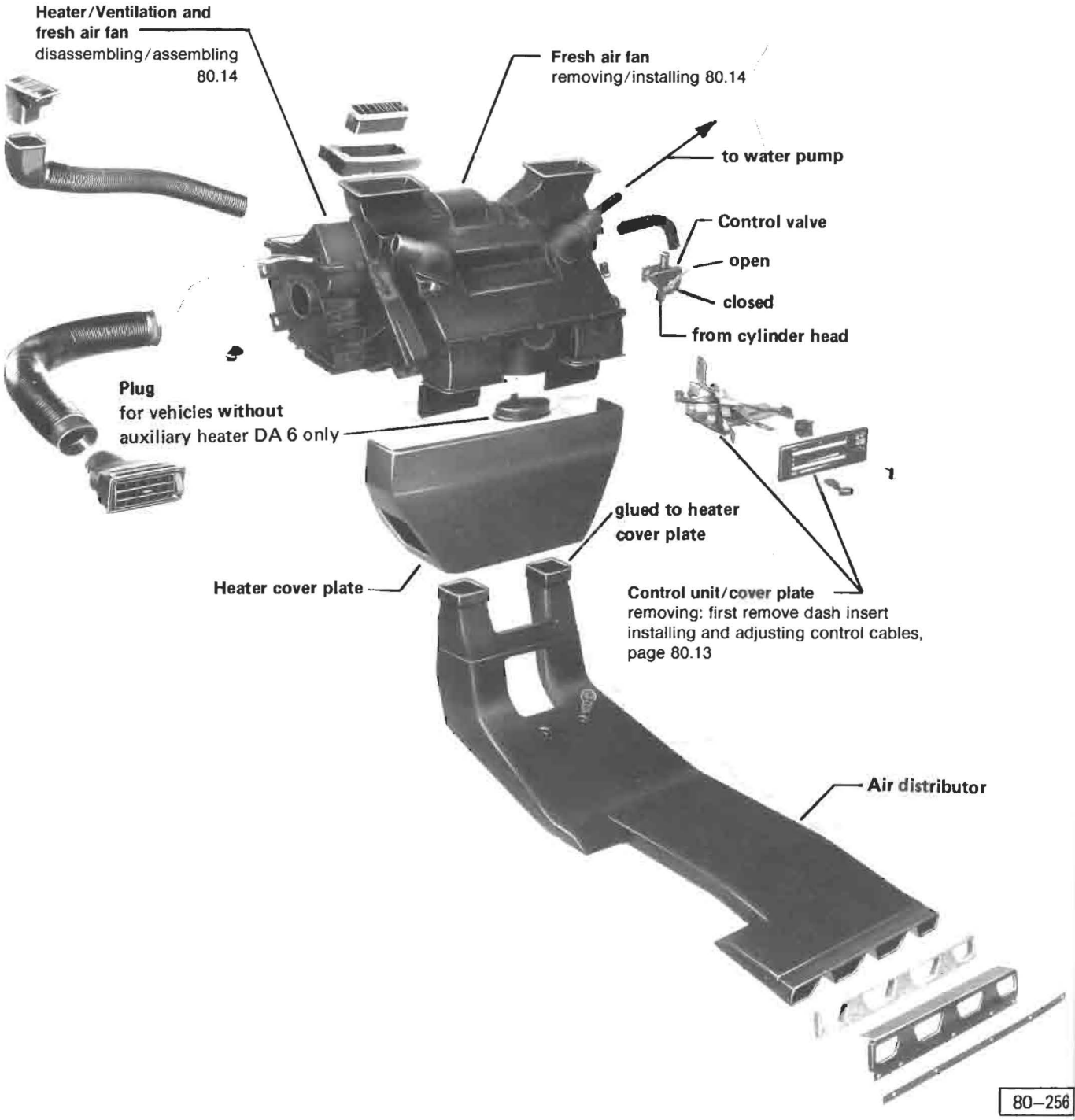
Heater/Ventilation and fresh air fan
disassembling/assembling 80.14
Fresh air fan
removing/installing 80.14
to water pump
Control valve
open
closed
from cylinder head
Plug
for vehicles without auxiliary heater DA 6 only
glued to heater cover plate
Heater cover plate
Control unit/cover plate
removing: first remove dash insert
installing and adjusting control cables, page 80.13
Air distributor
80–256

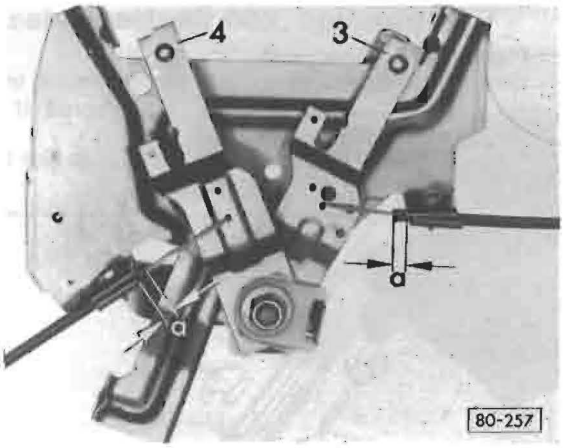

Fig. 1 **Control levers**
on lever 4 – passenger compartment ventilation
cable conduit has 2 green paint marks and projects out of clamp approx.
a = 3 mm (1/8 in.)

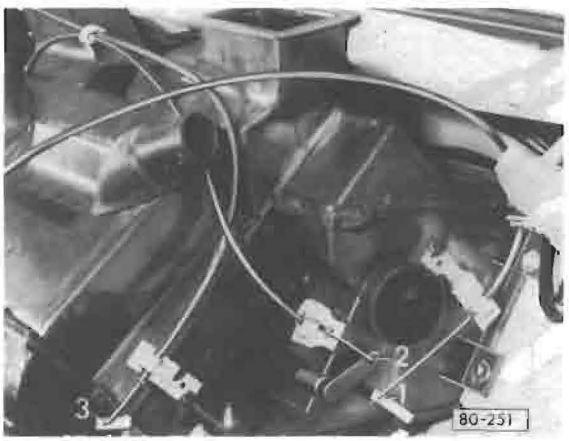

Fig. 2 **Flap-housing cables:**

1 – passenger compartment flap
2 – main cut-off flap
3 – defroster flap and footwell flap

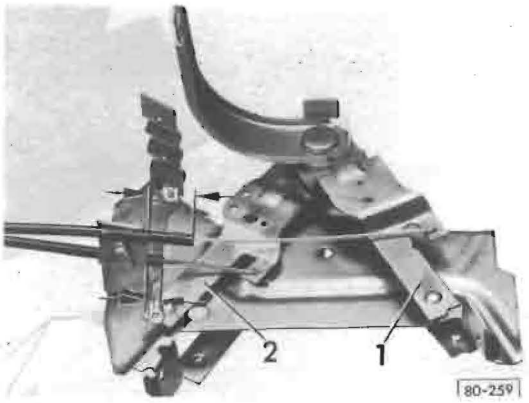

Fig. 3 **Control cable:**
on lever 1 -- defroster flap/footwell flap (cable conduit has red paint mark)
on lever 2 -- to control valve
(cable conduit has 2 blue/yellow paint marks)
conduits project out of clamp approx.
a = 30 mm (1 3/16 in.)
b = 20 mm (3/4 in.)

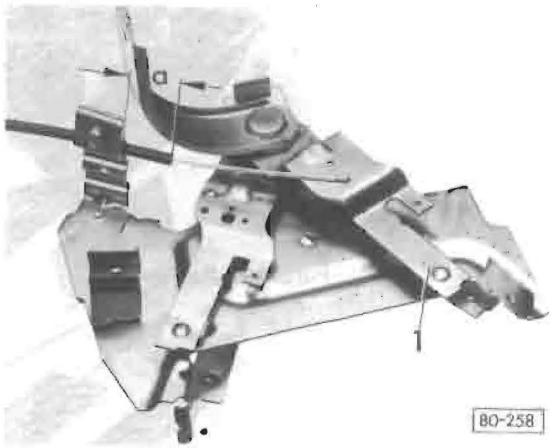

Vehicles with auxiliary heater DA 6 only

Fig. 4 **Control cable:**
on lever 1 -- heated air distributor in passenger compartment
(cable conduit has red paint mark and projects out of clamp approx.
a = max. 38 mm (1 1/2 in.)

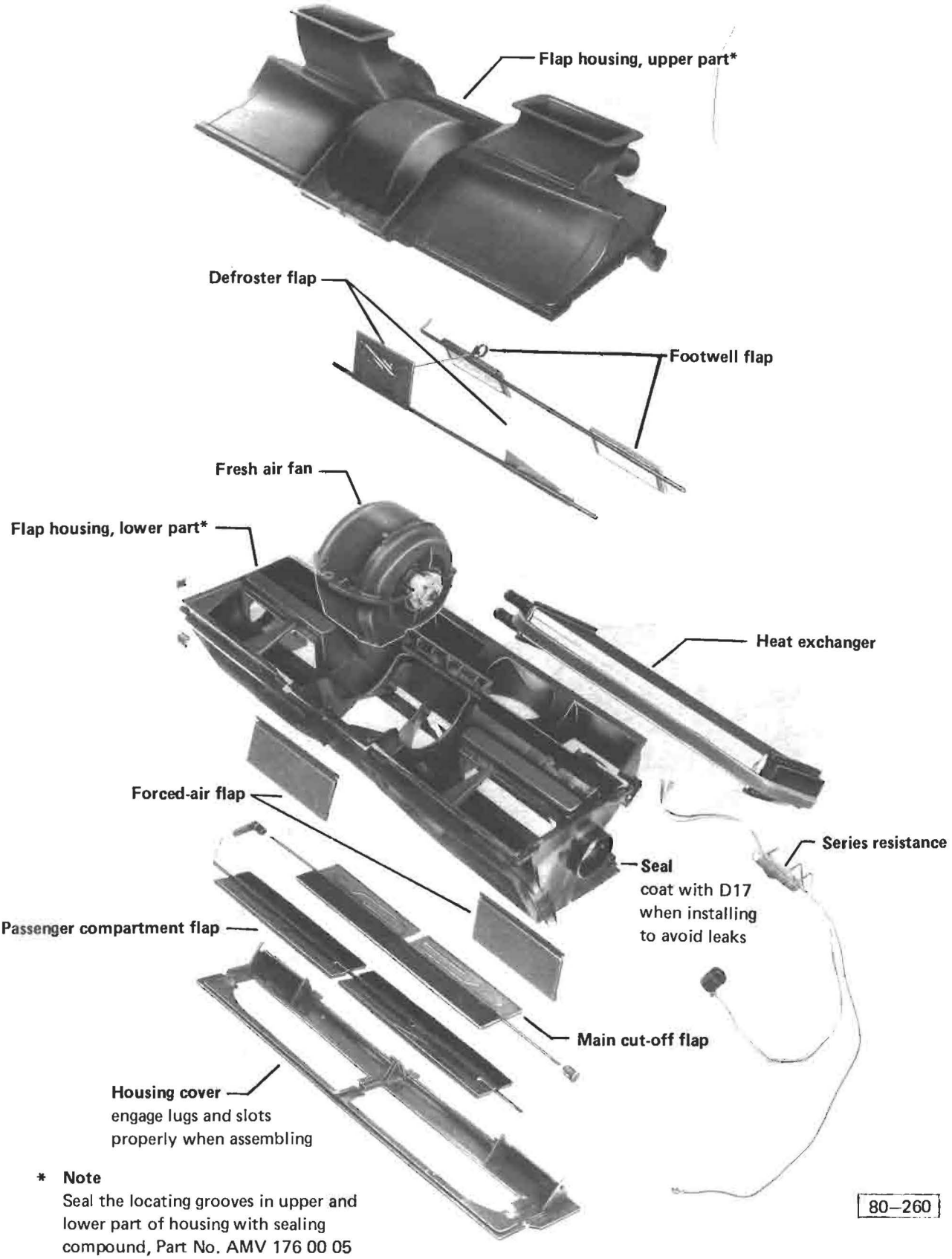

* **Note**
Seal the locating grooves in upper and lower part of housing with sealing compound, Part No. AMV 176 00 05

Heater/fresh air box, splitting

The heater/fresh air box halves are welded together at 18 flange areas.

To split case apart when repairs are needed,

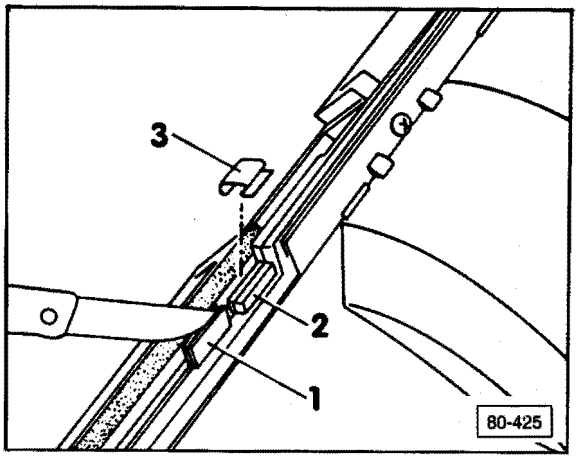

— insert knife along welded flange seam (1)
— hit knife sharply with hammer
— break all 18 welds

To assemble case halves after welded seams have been broken,

— attach clip (3) at clamp flange (2)

- requires 11 clips
- part number 321 819 059

CAUTION

Part numbers are for reference only. Always check with your Parts Department for latest parts information.

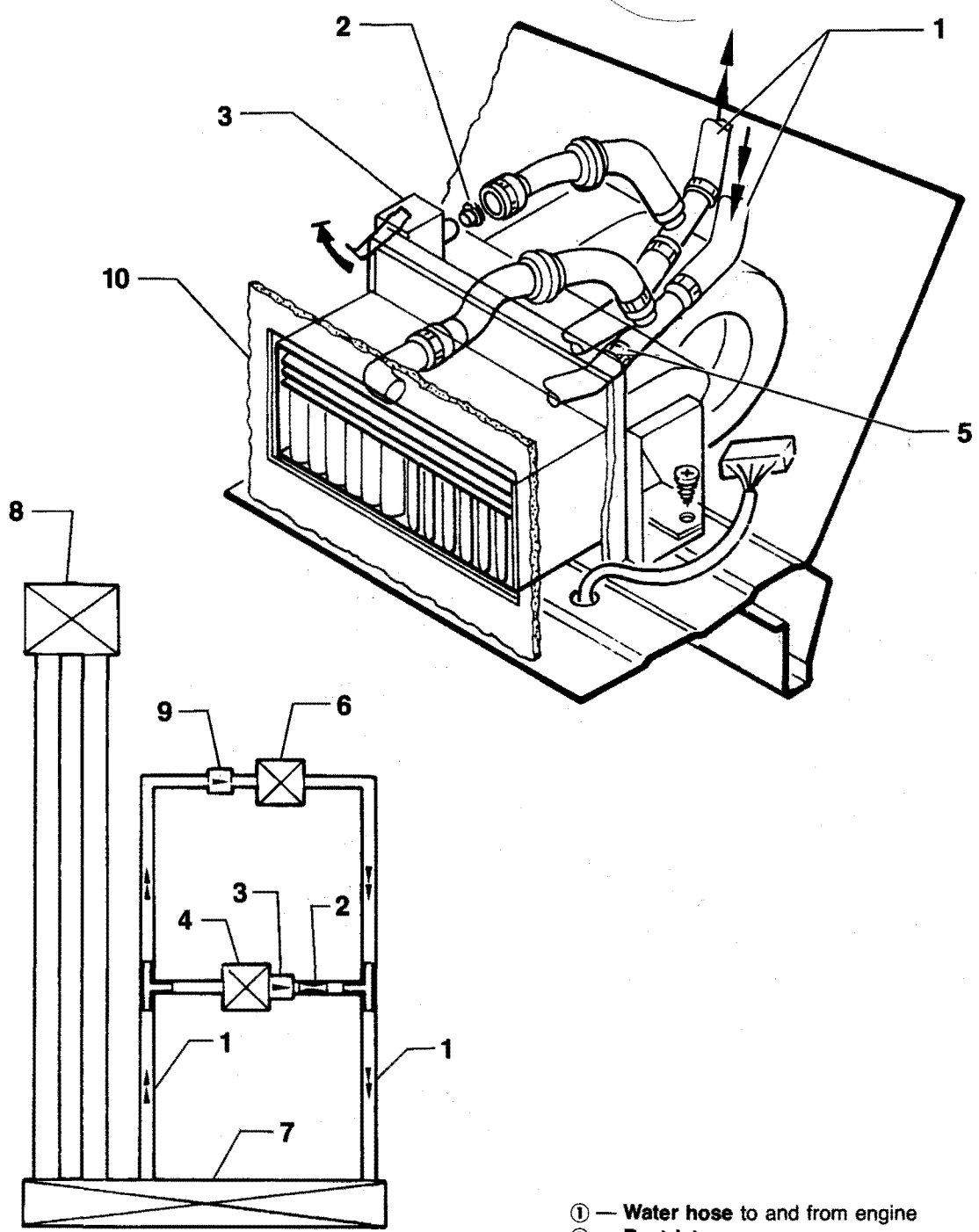

① — **Water hose** to and from engine
② — **Restrictor**
③ — **Heater valve** (additional heating)
④ — **Heater core** (additional heating)
⑤ — **Clamp**
⑥ — **Heater core** (in heater box)
⑦ — **Engine**
⑧ — **Engine radiator**
⑨ — **Heater valve**
⑩ — **Additional heater**

Note

Double arrows indicate direction of coolant flow.
Single arrows indicate flow direction of heater valves.

Heater Booster

Quick Data

Index

Air cooled – AFC

- Air circulation blower 82.7
- Combustion air blower 82.3, 82.4
  - hose 82.4
- Control flaps 82.8
- Defrost/Footwell flaps 82.7
- Flame switch 82.5
- Fuel pump 82.6
- Glow/Spark plug 82.3, 82.14a
- Heater booster/components 82.2
  - assembly 82.3
- Heater lever switch 82.8
- Ignition coil 82.6
- Overheat switch 82.4
- Safety switch 82.7, 82.8
- Temperature regulating switch 82.5
- Temperature sensor 82.6
- Troubleshooting (heater booster) 82.10, 82.11

Diesel

- Air circulation blower 82.17
- Combustion air blower 82.14
- Control valve 82.17
- Flame switch 82.15
- Fuel pump 82.17
- Glow/Spark plug 82.14
- Heater housing 82.14
- Ignition coil 82.17
- Overheat switch 82.15
- System components 82.12
- Temperature regulating switch 82.16
- Temperature sensor 82.16
- Troubleshooting 82.18

Auxiliary heater BBW 46

- Auxiliary heater
  - components 82.20
  - electrical wiring 82.24
  - operating 82.25
  - waterflow 82.22
- Combustion air blower
  - adjusting 82.32
  - removing/installing 82.32
- Engine coolant system
  - draining/refilling 82.35
- Felt pad
  - removing/installing 82.29
- Flame head
  - removing/installing 82.33
- Flame switch
  - checking 82.30
  - removing/installing 82.30
- Fuse S24
  - removing/installing 82.33
- Glow plug
  - checking 82.30
- Heater core
  - removing/installing 82.33
- Metering pump
  - flow rate checking 82.35
- Recirculation pump
  - removing/installing 82.32
- Series resistor
  - removing/installing 82.32
- Temperature sensor
  - checking 82.31
  - removing/installing 82.31

82 Heater Booster

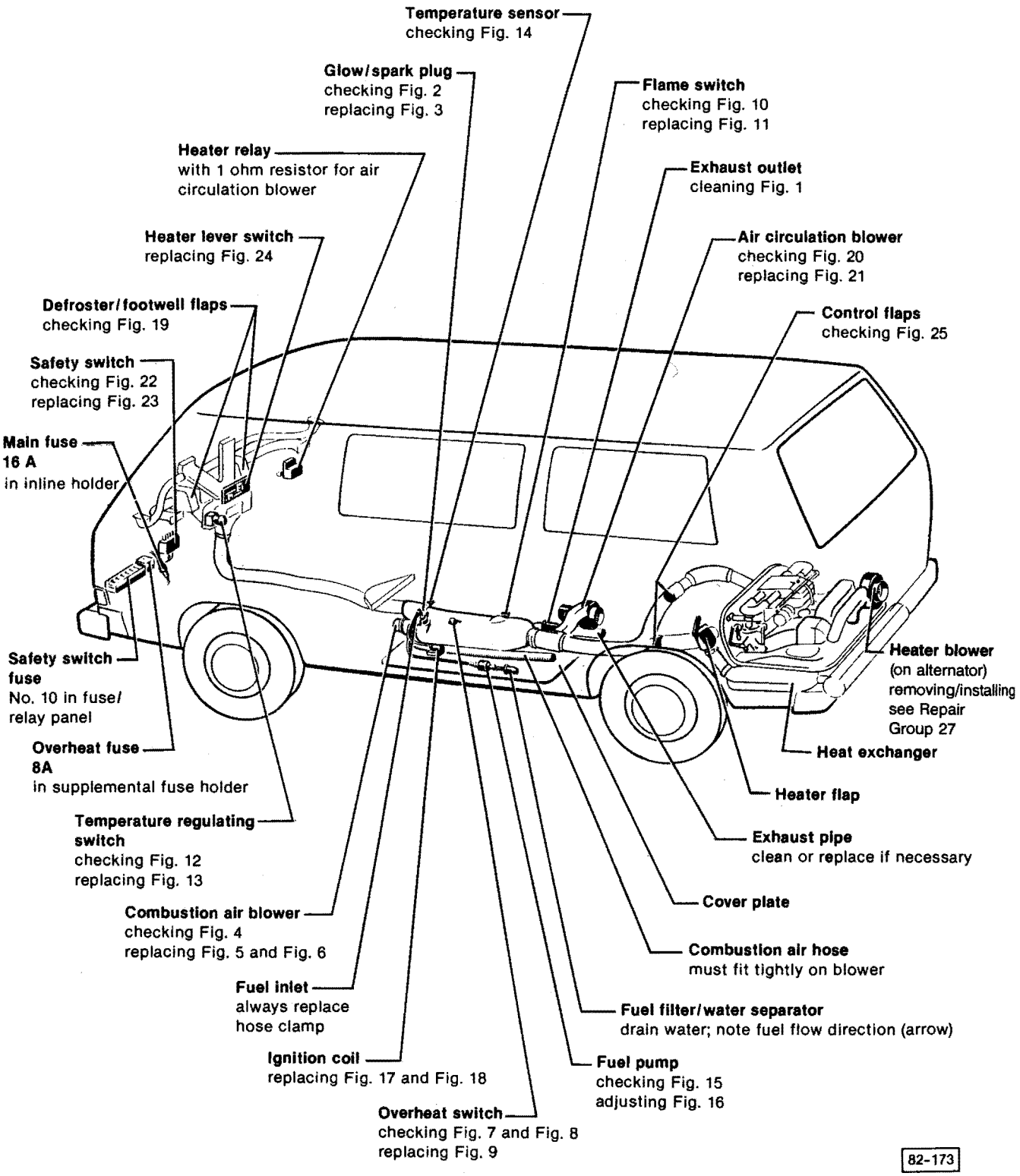

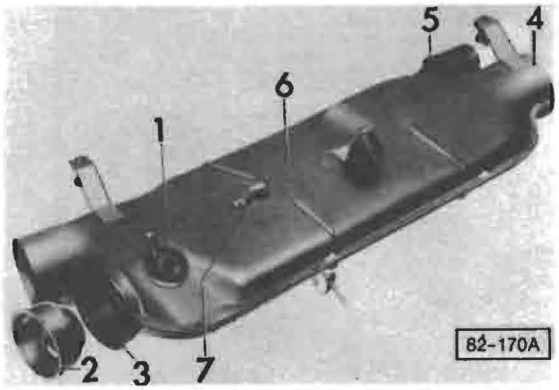

Fig. 1 Heater booster, checking

1 = glow/spark plug adaptor. If carbon-fouled, clean with toothbrush
2 = combustion air blower vane housing. If burned, replace
3 = combustion chamber. If carbon-fouled, clean
4 = fresh air inlet. If dirty, clean
5 = exhaust outlet. If tar-like deposits are noticeable, replace
6 = heater booster housing. If distorted by overheating, replace
7 = ceramic ring for overheat switch. If damaged, replace

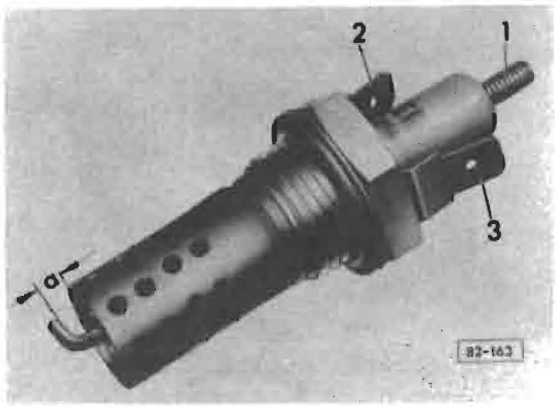

Fig. 2 Glow/spark plug, checking

1 = high tension terminal
2 = glow element terminal
3 = ground terminal

- electrode gap **a** : 2.5 mm (3/32 in.)
- voltage :12 volts
- resistance :4000–6000 ohms
- current draw of glow element :10 A

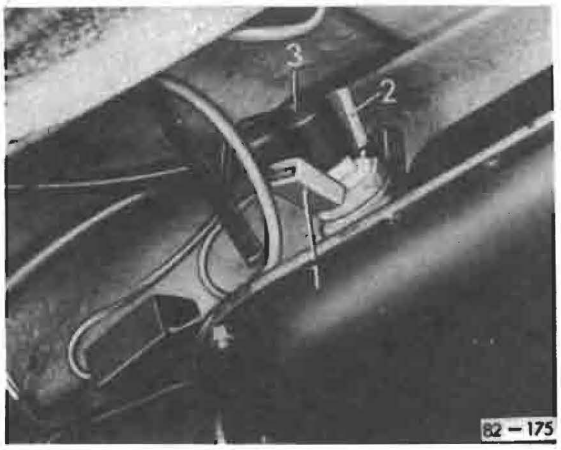

Fig. 3 Glow/spark plug

CAUTION

Connectors for terminals **1** and **2** must not contact plug connector **3.** This may cause ignition trouble

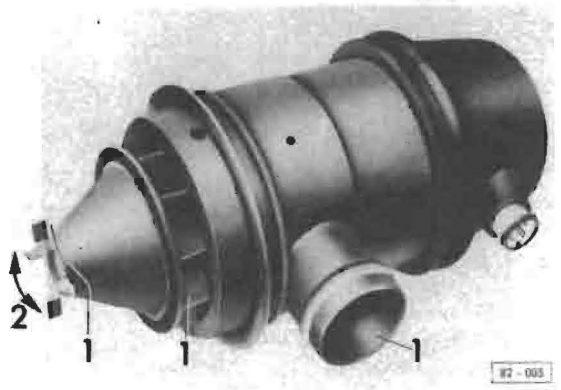

Fig. 4 Combusion air blower, checking

— check for damage caused by overheating at points marked **1**
— check blower bearing **2** for free movement in both directions

Note

Fuel is injected by pump every 33rd revolution of blower shaft. Each injection stroke can be detected by ticking noise from pump

Number of pump strokes × 33 = blower speed

speed: 6400–7000 rpm
(at 12 volts after running for 10 minutes)
- equivalent to 190–210 pump strokes per minute

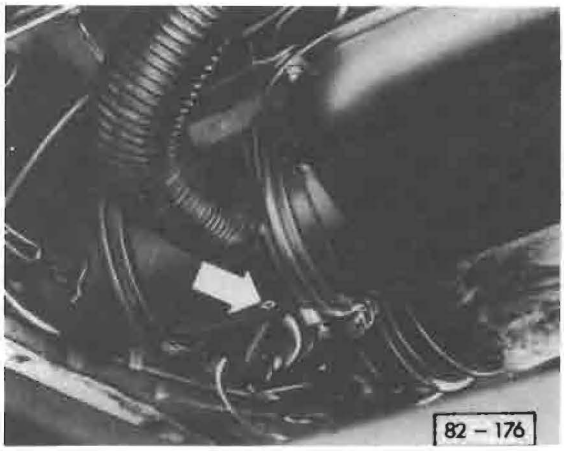

Fig. 5 Combustion air blower, installing

- condensation drain hole in housing must be at bottom (arrow)

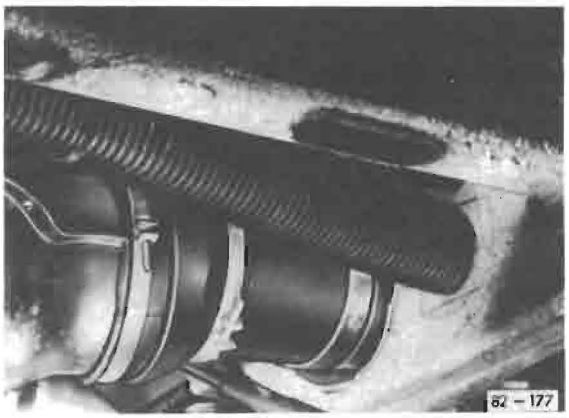

Fig. 6 Combustion air hose, installing

- combustion air hose must fit tightly on blower connection and in rear frame cross member.
  If hose comes off, heater flame will damage blower



Fig. 7 Overheat switch, checking (switch installed)

— remove ceramic ring **1** first
— turn heater on (engine not running)
- heater must start working within 70 seconds

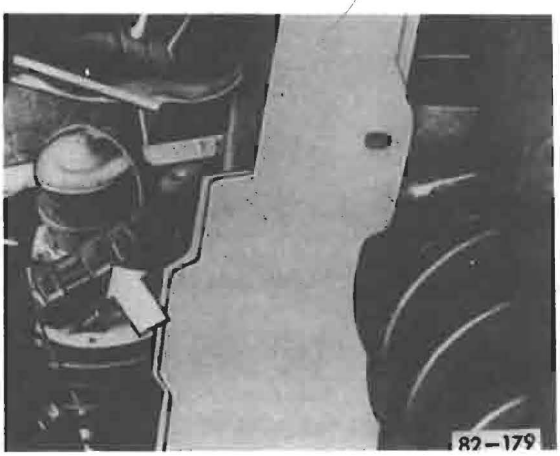

Fig. 8 Overheat switch, checking

— disconnect wiring (arrow) from blower
- if overheat switch operates within 60 seconds after blower is disconnected, switch is **OK** (replace fuse)
- if **NO**, replace overheat switch and fuse

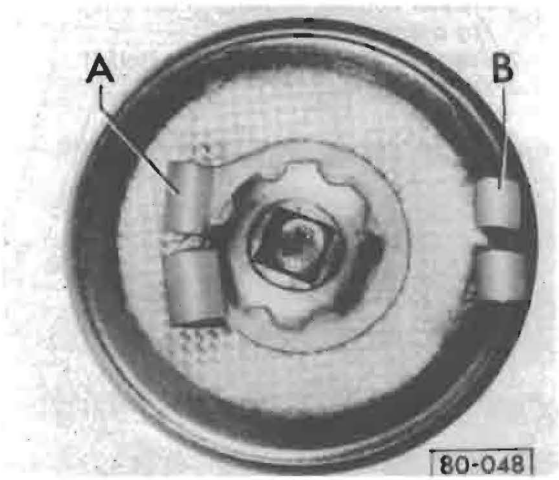

Fig. 9 Overheat switch, installing

— crimp green wire to terminal **A**
— crimp brown wire to terminal **B**
— solder wires (use rosin-core solder)

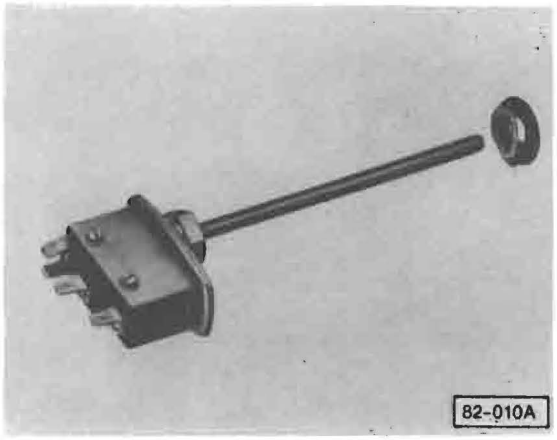

Fig. 10 Flame switch, checking
(switch installed)

— turn heater **ON**
  • heater must ignite within 70 seconds at 20°C/68°F
— turn heater **OFF**
  • run on time must be between 80 and 160 seconds at 20°C/68°F

If **NO** for either condition, replace flame switch



Fig. 11 Flame switch, removing

— pull rubber grommet off carefully
— remove union nut and pull switch out

CAUTION

Do not bend sensor tube

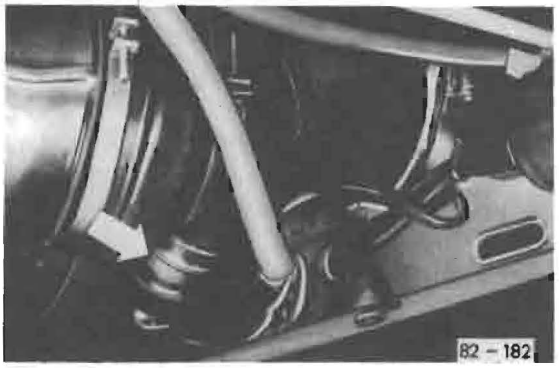

Fig. 12 Temperature regulating switch, checking
(switch installed)

— turn heater on
— disconnect either wire to temperature sensor (very briefly or overheat switch will operate)
  • fuel pump should continue to run
  If **YES,** temperature regulation **OK**
  If **NO,** replace temperature regulating switch
— bridge temperature sensor terminals
  • fuel pump should stop running
  If **YES,** temperature regulation **OK**
  If **NO,** replace temperature regulating switch
  • if temperature regulation is still not correct, check temperature sensor Fig. 14

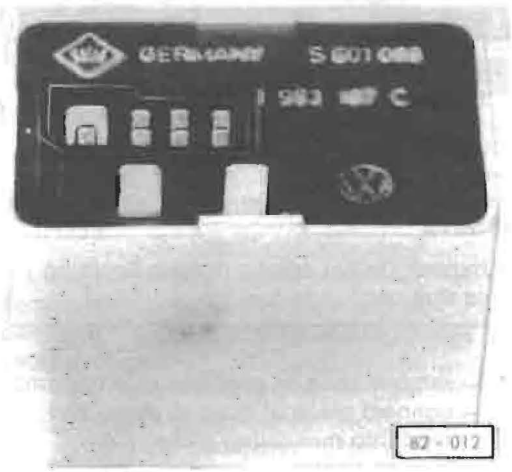

Fig. 13 Temperature regulating switch, replacing

CAUTION

Disconnect battery ground strap before starting to work

— remove escutcheon with VW 674/1
  • do not interchange wires of terminals 31 and K (outside of multi-pin connector) as this will cause short circuit in switch

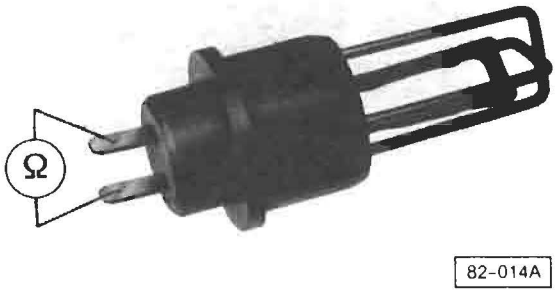

Fig. 14 Temperature sensor, checking

— place in warm water (60°C/140°F)
• resistance: 3500–5000 ohms

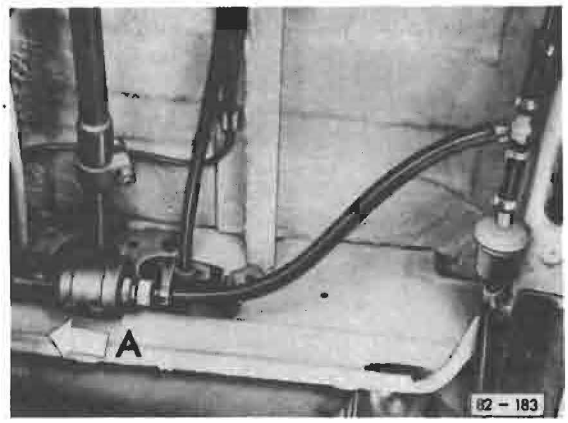

Fig. 15 Fuel pump, checking
(pump installed)

• arrow **A** = direction of fuel flow

WARNING

Fire hazard! Do not smoke or have anything in area that can ignite fuel

— remove hose on pressure side of pump
— connect piece of hose to pump and hold into measuring glass
— turn on heater
— check amount of fuel in measuring glass after 200 strokes of pump
• amount: 18.4 to 21.7 cm³

Note

To count 200 strokes write down number every 10 strokes.
If delivery rate is not correct, adjust fuel pump per Fig. 16

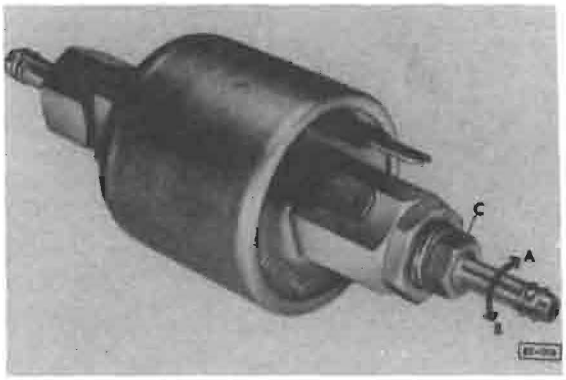

Fig. 16 Fuel pump, adjusting

• to increase amount of delivery: turn hose adaptor **C** in direction of arrow **B**
• to decrease amount of delivery: turn hose adaptor **C** in direction of arrow **A**
— lock and seal with paint after adjustment

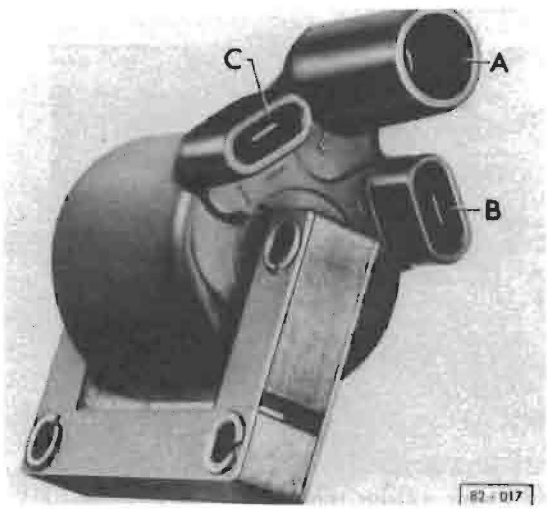

Fig. 17 Ignition coil, connections

A = high tension wire
B = terminal 15
C = terminal 1



Fig. 18 Ignition coil, location

Z = ignition coil

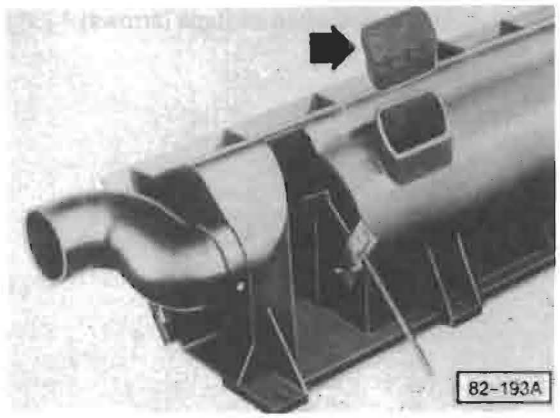

Fig. 19 Defroster/footwell flap, checking

— check flap (arrow) for free movement

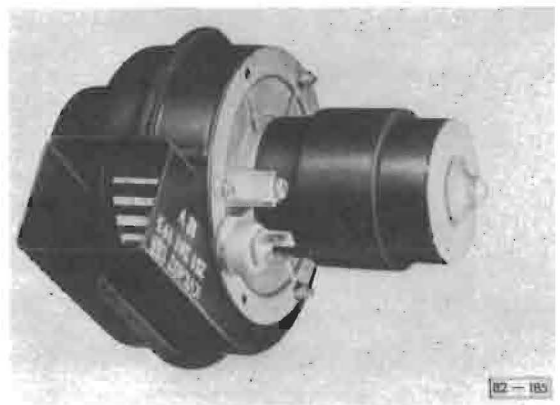

Fig. 20 Air circulation blower, checking (blower installed)

- current draw:
  (engine not running)
  low speed: 3 to 4A
  high speed: 6.5 to 7.5A



Fig. 21 Air circulation blower, replacing

- condensation drain hole (arrow) must be at bottom

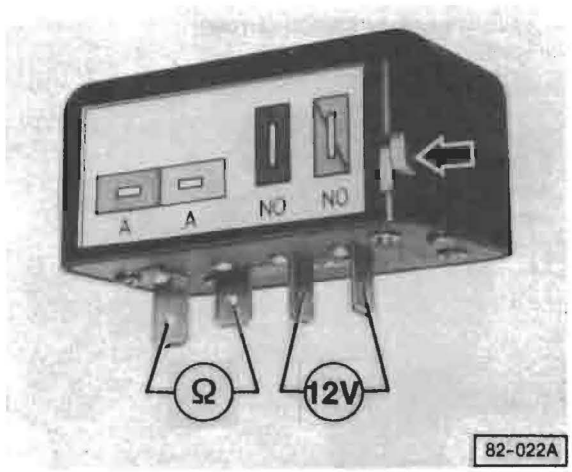

Fig. 22 Safety switch, checking
(switch removed)

CAUTION

Disconnect battery ground strap. Temperature regulation switch will be damaged if disconnected wires touch one another or ground

— connect ohmmeter to terminals **A**
— apply 12 volts to terminals **NO**
— measure elapsed time when voltage is applied until contact is interrupted at terminals **A**
  - switch response time:
    150 to 230 seconds at 20°C/68°F

  If **NO**, replace switch

Note

If safety switch has operated within required time, press reset lever in direction of **arrow**

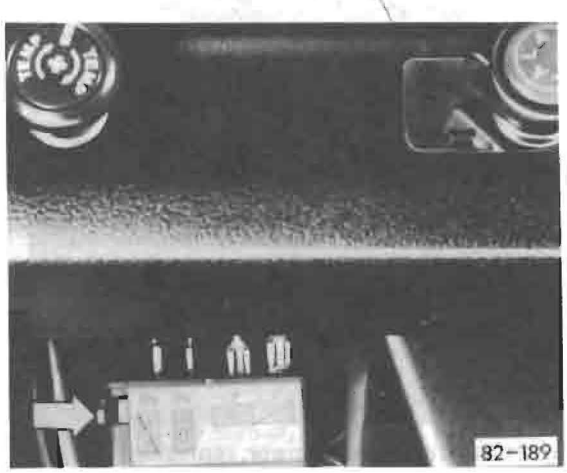

Fig. 23 Safety switch, replacing

— disconnect battery ground strap
• safety switch (arrow)

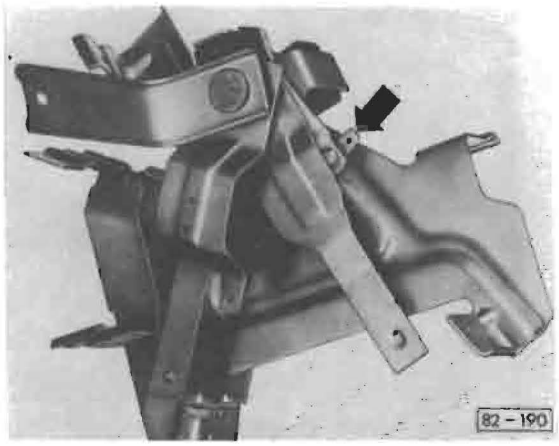

Fig. 24 Heater lever switch contact, location

• switch contact (arrow)
— removing/installing, see Repair Group 80

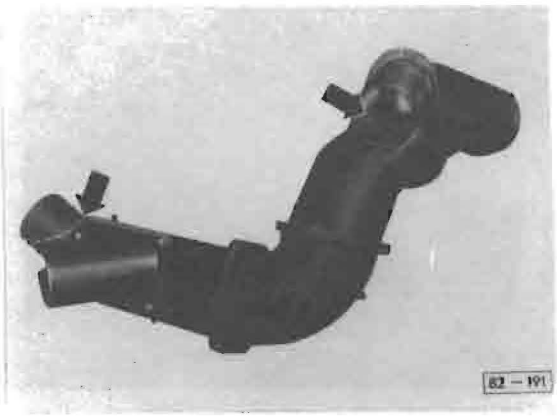

Fig. 25 Control flaps, checking

— remove hoses
— check operation of flaps (arrows)

THIS PAGE INTENTIONALLY
LEFT BLANK

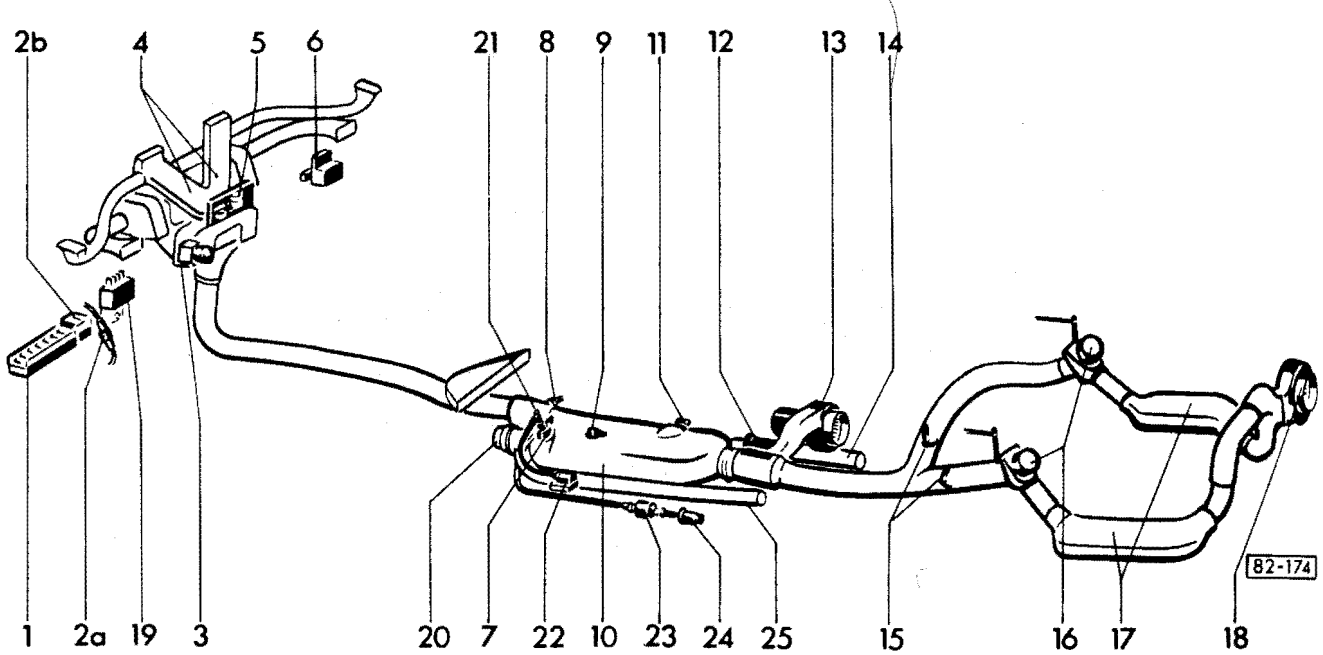

Trouble	Operating conditions
10th fuse (16 A) in fuse relay panel blown	Engine running Heater lever switch **5** ON Temperature regulating switch **3** ON
Main fuse (16 A) in fuse holder blown	Temperature regulating switch **3** ON Heater lever switch **5** ON
Overheat switch **9** has operated and fuse **26** (8 A) has blown	Temperature regulating switch **3** ON Heater lever switch **5** ON
Safety switch **19** has operated	Temperature regulating switch **3** ON Heater lever switch **5** ON
Heater does not run on	Heater and engine turned OFF
Air circulation blower does not run at two speeds	Temperature regulating switch **3** ON Heater lever switch **5** ON Ignition turn ON and OFF
Heater output inadequate and/or heater uses too much fuel	Engine running; heater turned ON
Air circulation blower **13** and combustion air blower **20** continue to run after run on period although heater is turned OFF	Engine running Heater lever switch **5** ON Temperature regulating switch **3** just turned OFF
Heater smokes	Temperature regulating switch **3** ON Heater lever switch **5** ON
Heater does not start up at all	Temperature regulating switch ON Heater lever switch **5** ON

Note

At least 10 volts required for voltage check at flame switch

Trouble caused by	see page
1 — 10th fuse (16A) in fuse/relay panel	Wiring Diagrams
2a — Main fuse (16A) in inline fuse holder	Wiring Diagrams
2b — Overheat fuse (8A) in supplemental fuse holder	Wiring Diagrams
3 — Temperature regulating switch	82.5
4 — Defroster/footwell flaps	82.7
5 — Heater lever switch	82.8
6 — Heater relay	82.2
7 — Glow/spark plug	82.3
8 — Temperature sensor	82.6
9 — Overheat switch	82.4
10 — Heater booster	82.3
11 — Flame switch	82.5
12 — Exhaust outlet	82.2
13 — Air circulation blower	82.7
14 — Exhaust pipe	82.2
15 — Control flaps	82.8
16 — Heater flap	82.2
17 — Heat exchanger	82.2
18 — Heater blower	82.2
19 — Safety switch	82.7
20 — Combustion air blower	82.3
21 — Fuel inlet	82.2
22 — Ignition coil	82.6
23 — Fuel pump	82.6
24 — Fuel filter/water separator	82.2
25 — Combustion air hose	82.2
— Trace circuit in current flow diagram	Wiring Diagrams

																										○
																										△
																										○
																										○
																										□

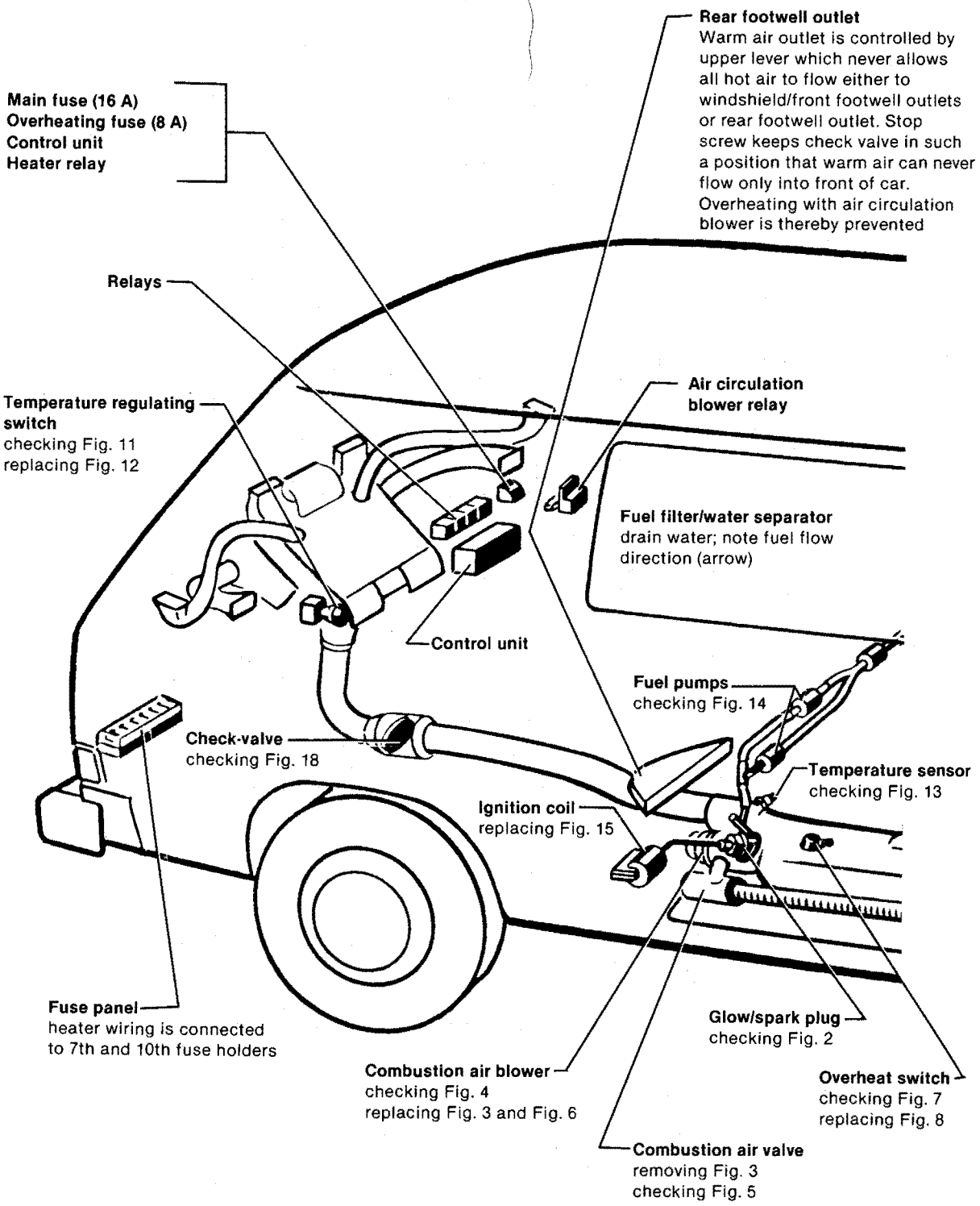

Current flow diagram see wiring diagram, repair group
Troubleshooting page 82.18, 82.19

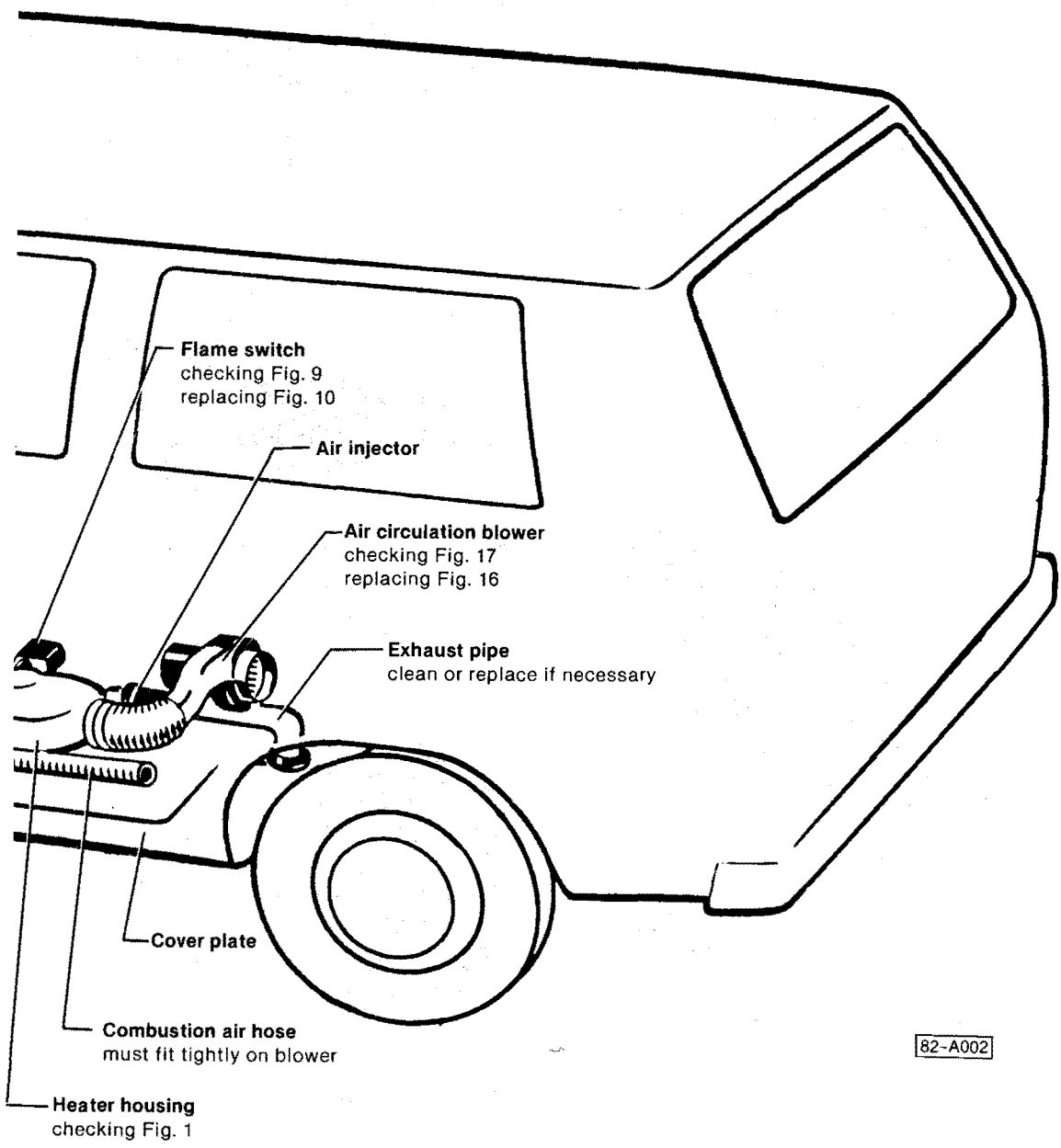
Flame switch
checking Fig. 9
replacing Fig. 10
Air injector
Air circulation blower
checking Fig. 17
replacing Fig. 16
Exhaust pipe
clean or replace if necessary
Cover plate
Combustion air hose
must fit tightly on blower
Heater housing
checking Fig. 1
82-A002

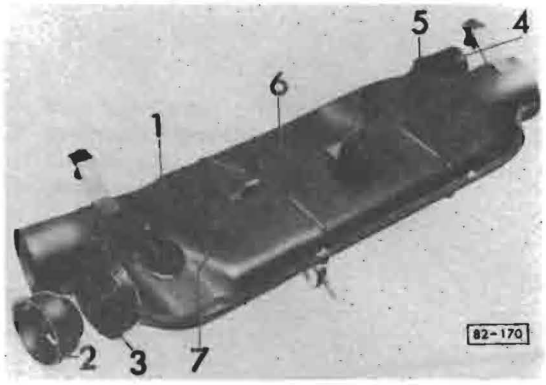

Fig. 1 Heater booster, checking

1 = **Glow/spark plug adaptor.** If carbon-fouled, clean with toothbrush
2 = **Combustion air blower vane housing.** If burned, replace
3 = **Combustion chamber.** If carbon-fouled, clean
4 = **Fresh air inlet.** If dirty, clean
5 = **Exhaust outlet.** If tar-like deposits are noticeable, replace
6 = **Heater booster housing.** If distorted by overheating, replace
7 = **Ceramic ring for overheat switch.** If damaged, replace

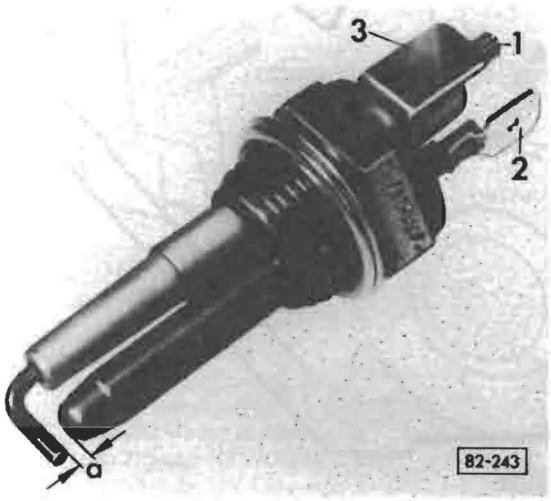

Fig. 2 Glow/spark plug, checking

1 = high tension terminal
2 = glow element terminal
3 = ground terminal

- electrode gap **a** : 2.5 mm (3/32 in.)
- voltage : 12 volts
- resistance : 4000-6000 ohms
- current draw of glow element : 9A at 11V

See page 82.14a for additional information

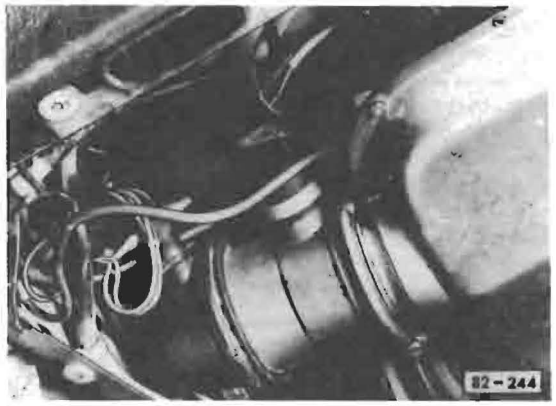

Fig. 3 Combustion air blower/combustion air valve, removing

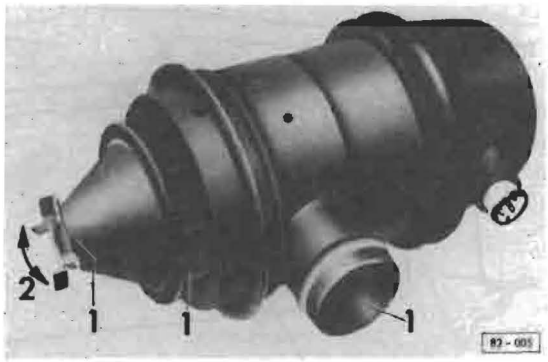

Fig. 4 Combustion air blower, checking

—check for damage caused by overheating at points marked **1**
—check blower bearing **2** for free movement in both directions

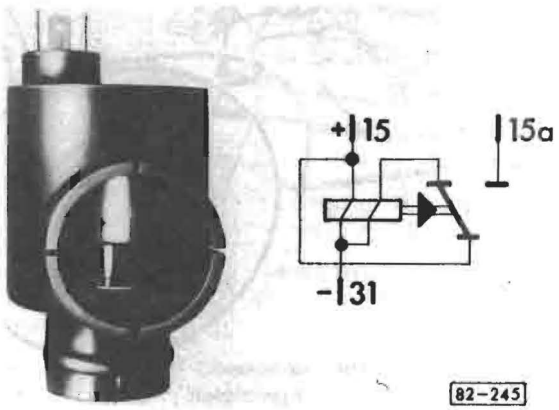

Fig. 5 Combustion air valve, checking

—connect ground wire to terminal 31
—connect hot wire to terminal 15
• air intake valve must open
—press valve plate against stop
• check for current flow between terminals 15 and 15a

Engineering tests show that a spark plug is not needed to ignite the diesel fuel/air mixture in the auxiliary heater combustion chamber.

Therefore, the combination glow/spark plug has been superceded by glow plug Part No. 251 963 319F.

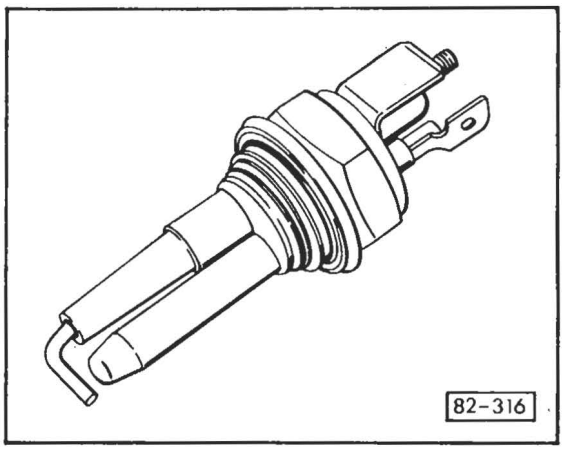

Old style spark/glow plug

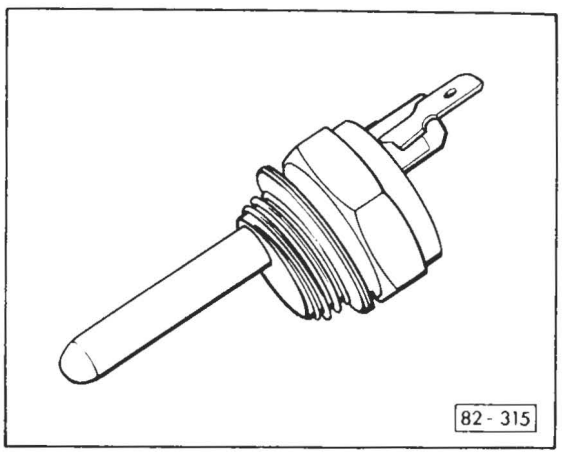

New style glow plug Part No. 251 963 319F

Note

Modify wiring when replacing old style combination spark/glow plug with new style glow plug.

Work sequence

— install new style glow plug
— connect positive (+) and ground (−) wires to glow plug
— remove and discard high voltage cable from auxiliary heater ignition coil
— disconnect power supply wire to terminal **15** of auxiliary heater ignition coil and insulate terminal end with electrical tape

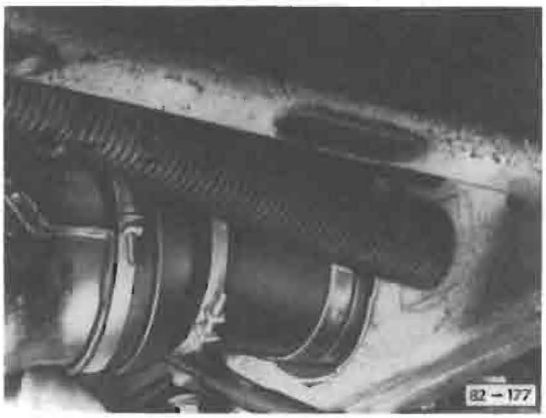

Fig. 6 Combustion air blower, installing

- combustion air hose must fit tightly on blower.
  If hose comes off, heater flame will damage blower



Fig. 7 Overheat switch, checking

—turn heater ON and select highest heating
—wait until blowers run at highest speed (flame switch has cut off glow plug)
—disconnect air circulation blower (arrow)
—wait for 90 seconds and reconnect air circulation blower
- if fuel pump starts running, overheat switch is **OK**
- if fuel pump does not start running within 90 seconds, overheat fuse is blown
  —replace overheat switch

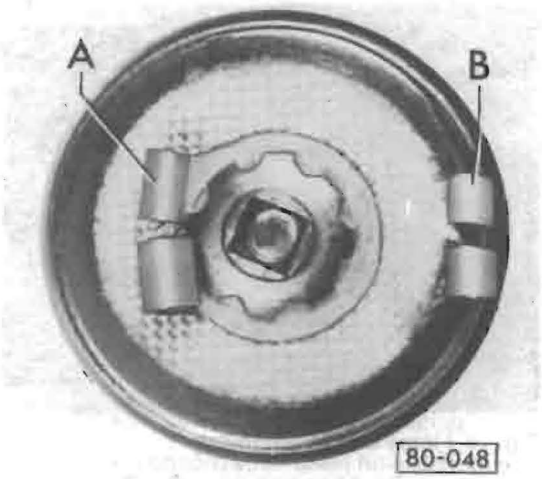

Fig. 8 Overheat switch, replacing

—crimp green wire to terminal **A**
—crimp brown wire to terminal **B**
—solder wires (use rosin-core solder)

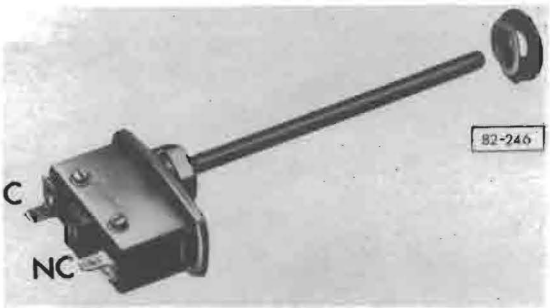

Fig. 9 Flame switch, checking
(switch installed)

—turn heater **ON**
- heater must ignite within 100 seconds at 20°C/68°F

—turn heater **OFF**
- run-on time must be approx. 180 seconds at 20°C/68°F

If **NO** for either condition, replace flame switch

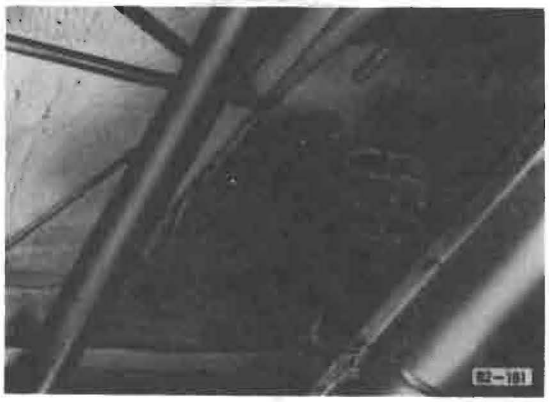

Fig. 10 Flame switch, removing

—pull rubber grommet off carefully
—remove union nut and pull switch out

CAUTION

Do not bend sensor tube

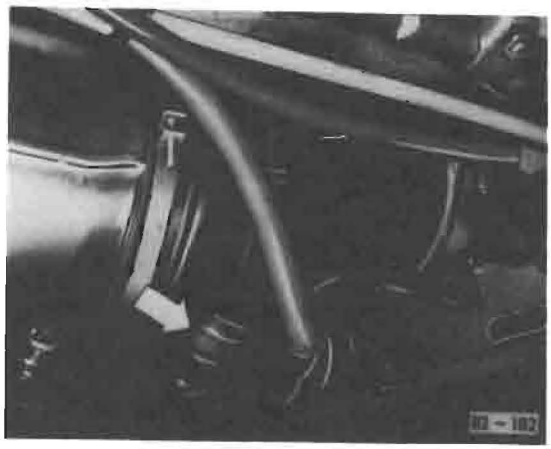

Fig. 11 Temperature regulating switch, checking (switch installed)

—turn heater ON and wait until blower speed increases
—bridge temperature sensor terminals (arrow)
- one fuel pump (small quantity) must start running

—remove bridge on connector for temperature sensor
- other fuel pump (large quantity) must start running

if under both conditions, fuel pumps are running, temperature regulating switch is OK

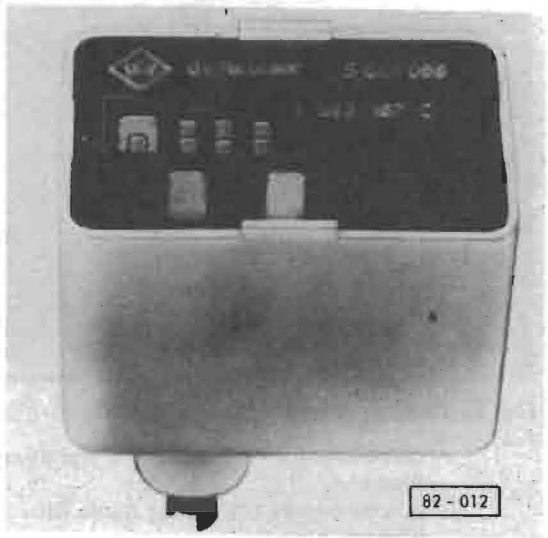

Fig. 12 Temperature regulating switch, replacing

CAUTION

Disconnect battery ground strap before starting to work

—remove escutcheon with VW 674/1
- do not interchange wires of terminals 31 and K (outside of multi-pin connector) as this will cause short circuit in switch



Fig. 13 Temperature sensor, checking

—place in warm water (60 °C/140 °F)
- resistance: 3500-5000 ohms

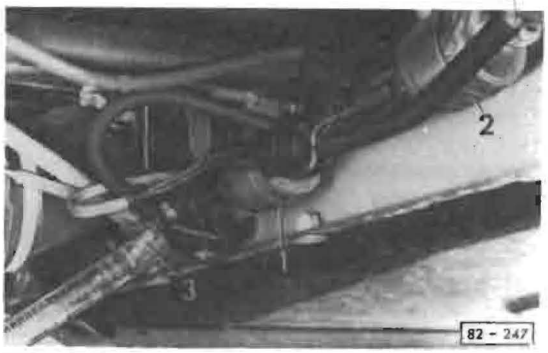

Fig. 14 Fuel pump, checking
(pump installed)

1—**Fuel pump for small quantity** (Spare Part No. 251 261 467 A)
2—**Fuel pump for large quantity** (Spare Part No. 251 261 467 B)
3—**T-connector**
—disconnect hose between heater and T-connector (3) at connector and hold into measuring glass
—turn heater ON and wait until pump starts pumping
—check amount of fuel in measuring glass after 100 strokes of pump
• amount: 4.5–5 cm³
—connect green/yellow wire of fuel pump (1) to fuel pump (2)
—turn heater ON and wait until pump starts pumping
—check amount of fuel in measuring glass after 100 strokes of pump
• amount: 8–9 cm³

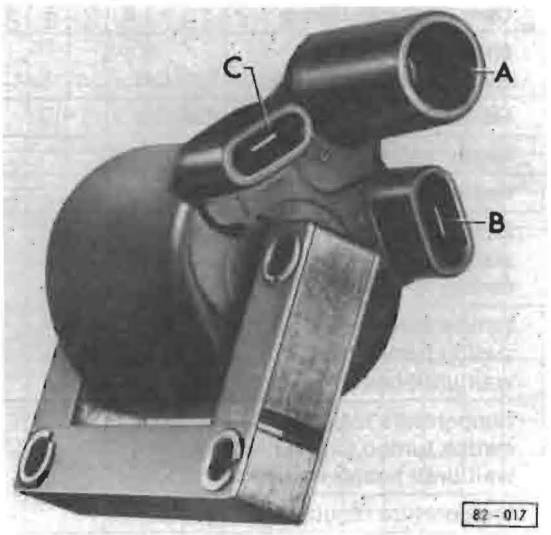

Fig. 15 Ignition coil, connections

A = high tension wire
B = terminal 15
C = terminal 1



Fig. 16 Air circulation blower, replacing

• condensation drain hole (arrow) must be at bottom

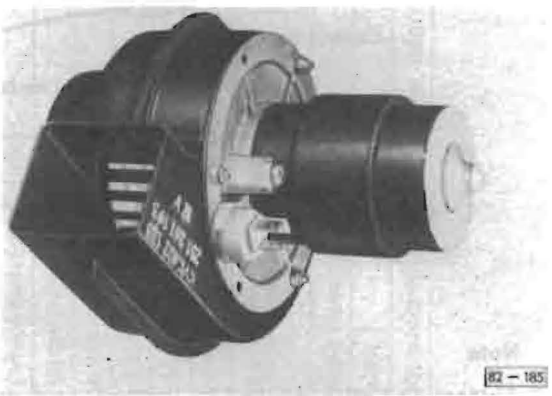

Fig. 17 Air circulation blower, checking (blower installed)

• current draw:
(engine not running)
low speed: 3 to 4A
high speed: 6.5 to 7.5A

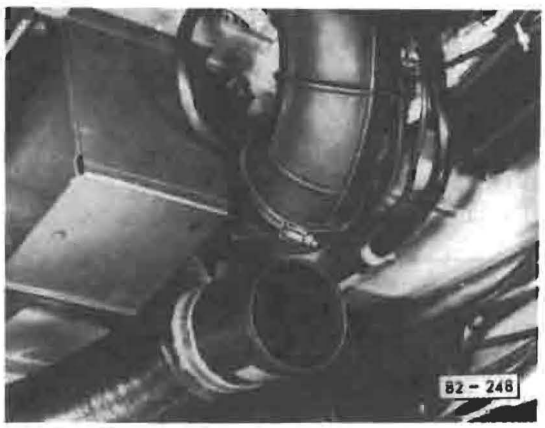

Fig. 18 Control flap, checking

—if 8A overheat fuse is blown, check for free movement of flap

82 Heater Booster

Troubleshooting

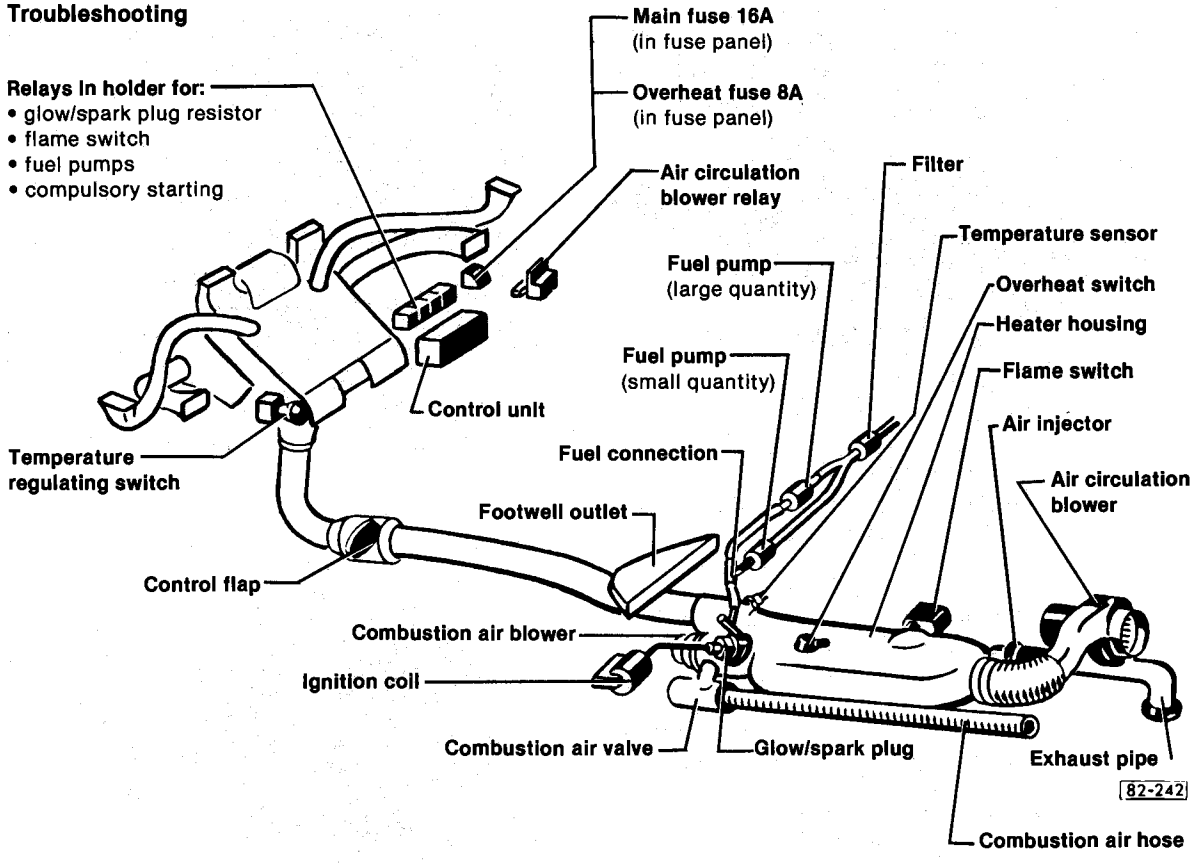

Note

At least 10.3 volts required for voltage check at flame switch

Trouble	Operating conditions
main fuse (16 A) blown	engine running, temperature regulating switch ON
overheat switch operates and overheat fuse blows	temperature regulating switch ON
heater cannot be shut OFF	heater switched OFF
heater does not run on	heater switched OFF
air circulation blower does not run at 2 speeds	temperature regulating switch ON, wait until heater responds, switch ignition ON and OFF
heater output inadequate, small quantity fuel pump always works	temperature regulating switch ON, switch turned to high heating, wait until heater responds
heater output too hot, large quantity fuel pump always works	temperature regulating switch ON, switch turned to low heating, wait until heater responds
heater does not start working at all	temperature regulating switch ON
heater stops working after run-on time	temperature regulating switch ON
heater smokes	temperature regulating switch ON
air circulation blower and combustion air blower continue to run on although heater is turned OFF	engine running, temperature regulating switch was turned ON

Symbols denote degree of trouble probability
○ = Highly probable
△ = Not so probable
□ = Seldom

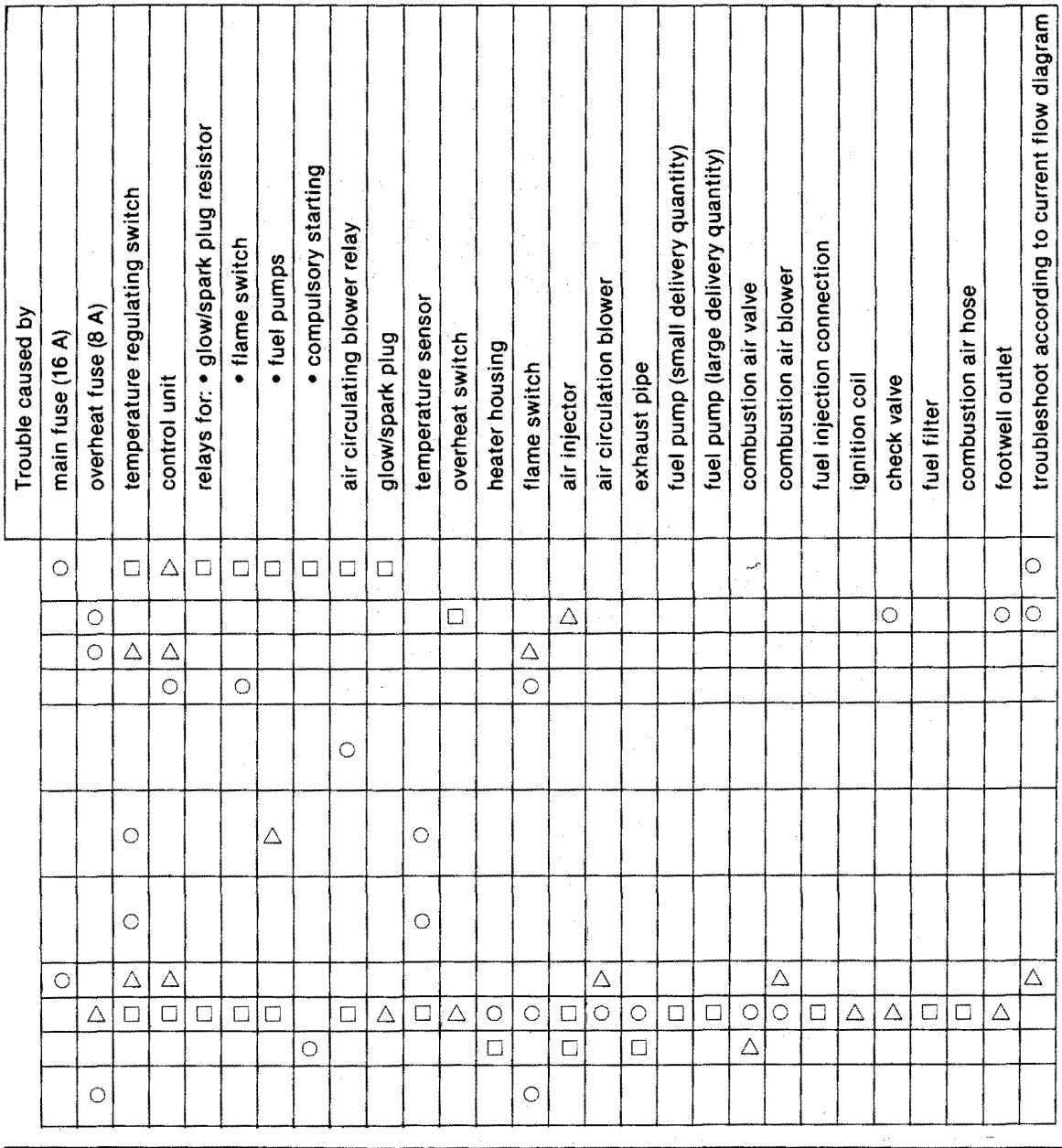

Auxiliary heater BBW 46

This heater is offered as optional equipment on Vanagon Syncro models only sold in Canada.

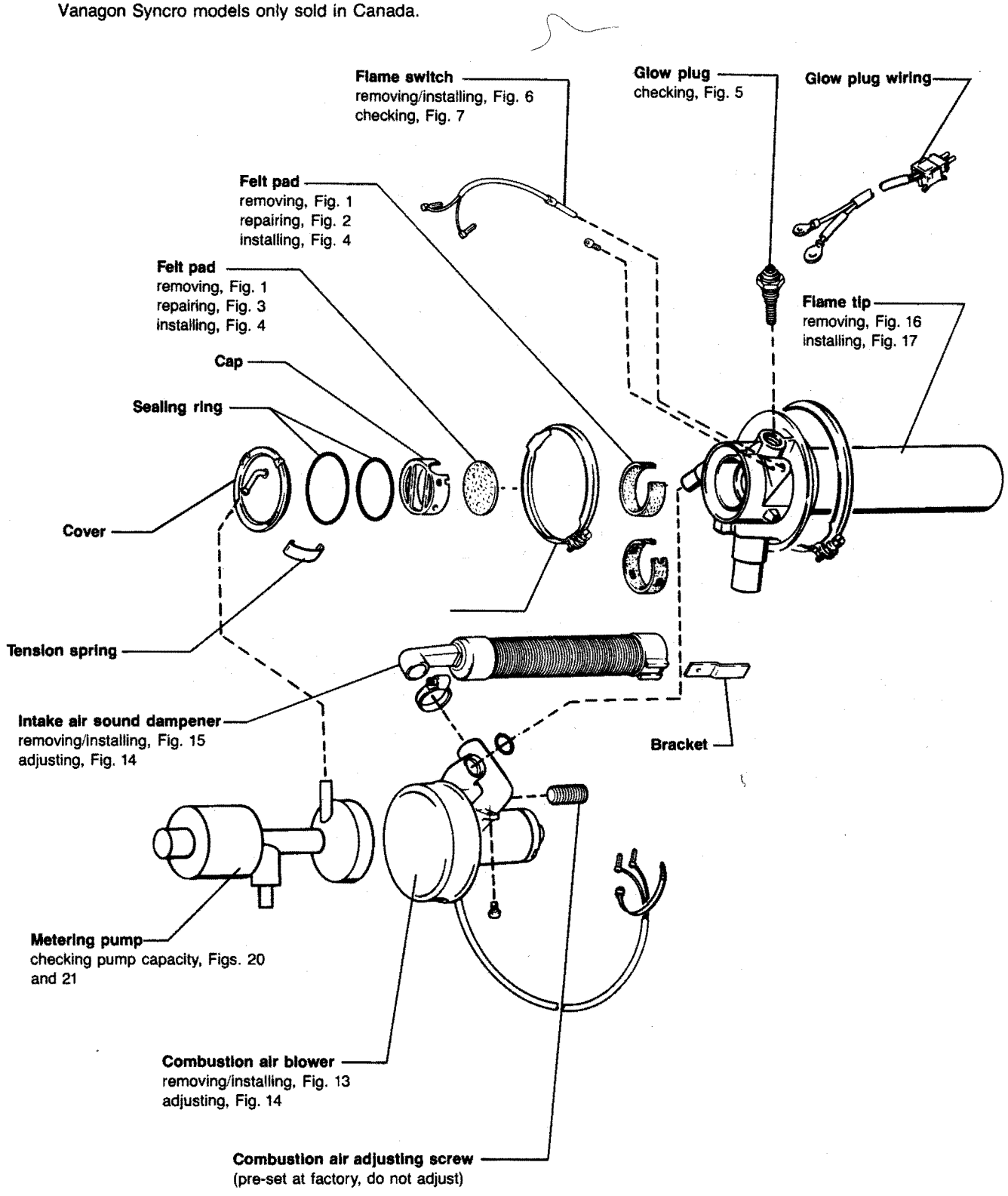

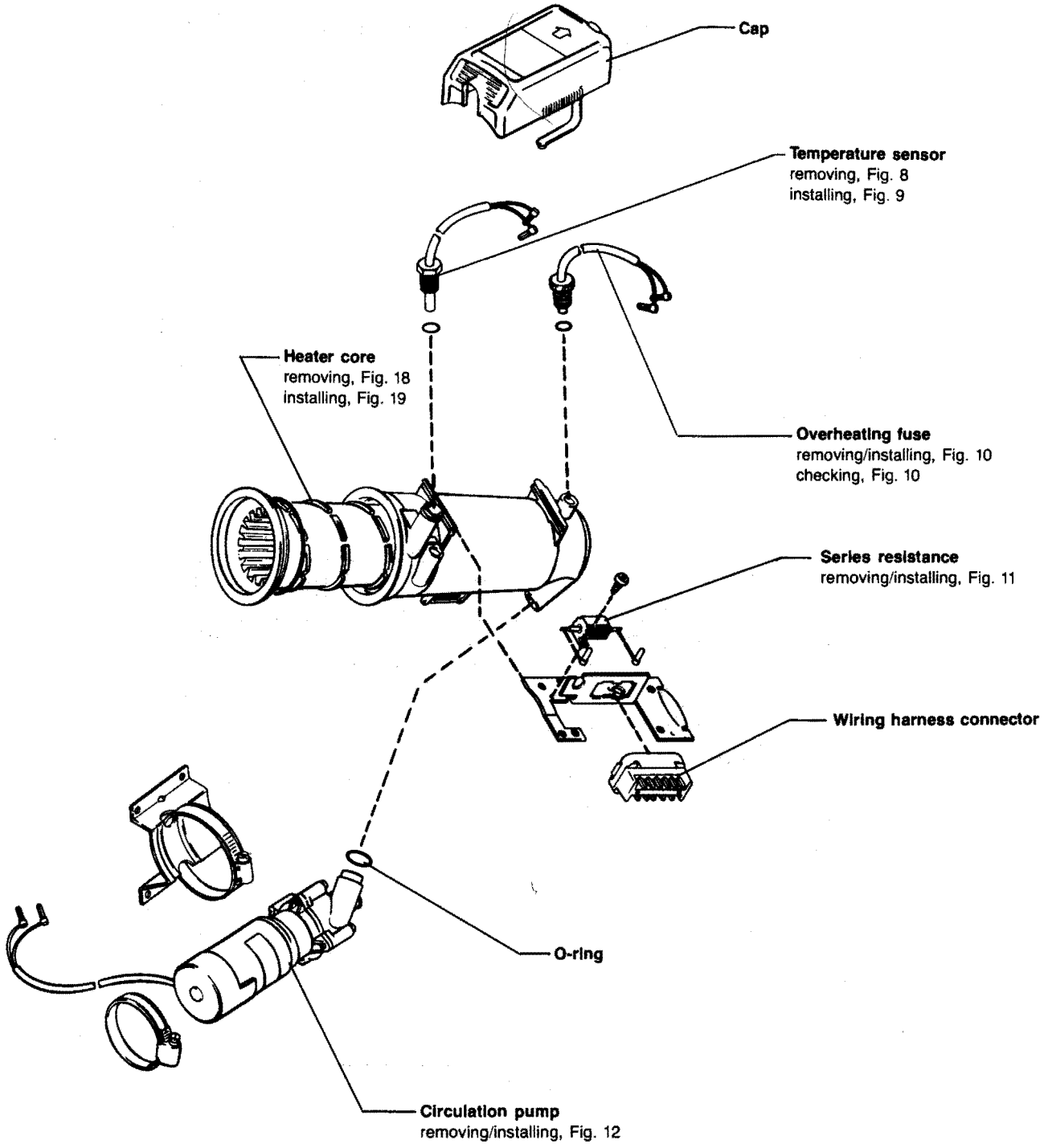

CAUTION

Coolant/antifreeze **must not** be reused when replacing engine, cylinder head, cylinder head gasket, radiator and heater core.

82-320

Water flow through heater system

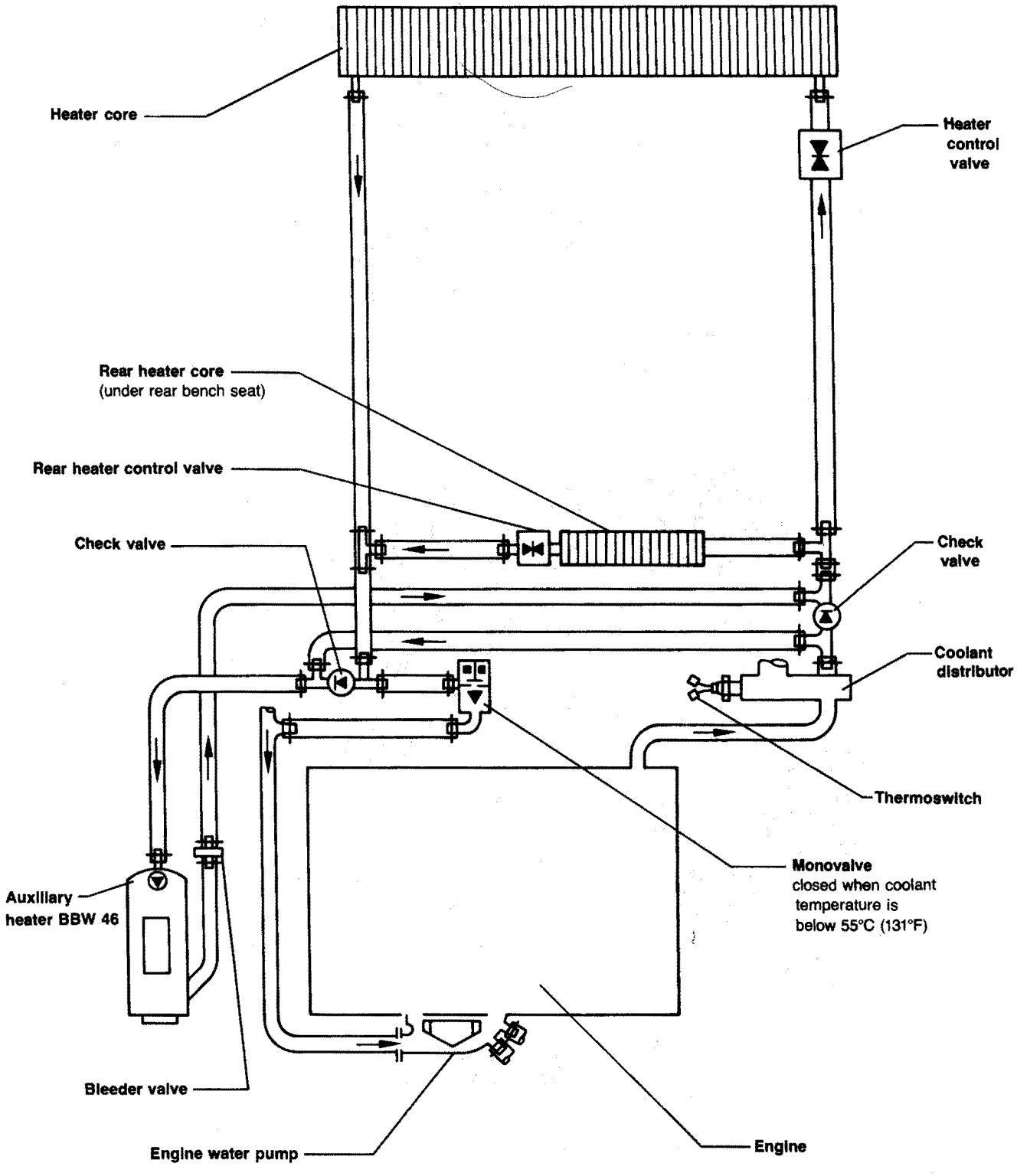

THIS PAGE INTENTIONALLY
LEFT BLANK

Auxiliary heater, electrical wiring

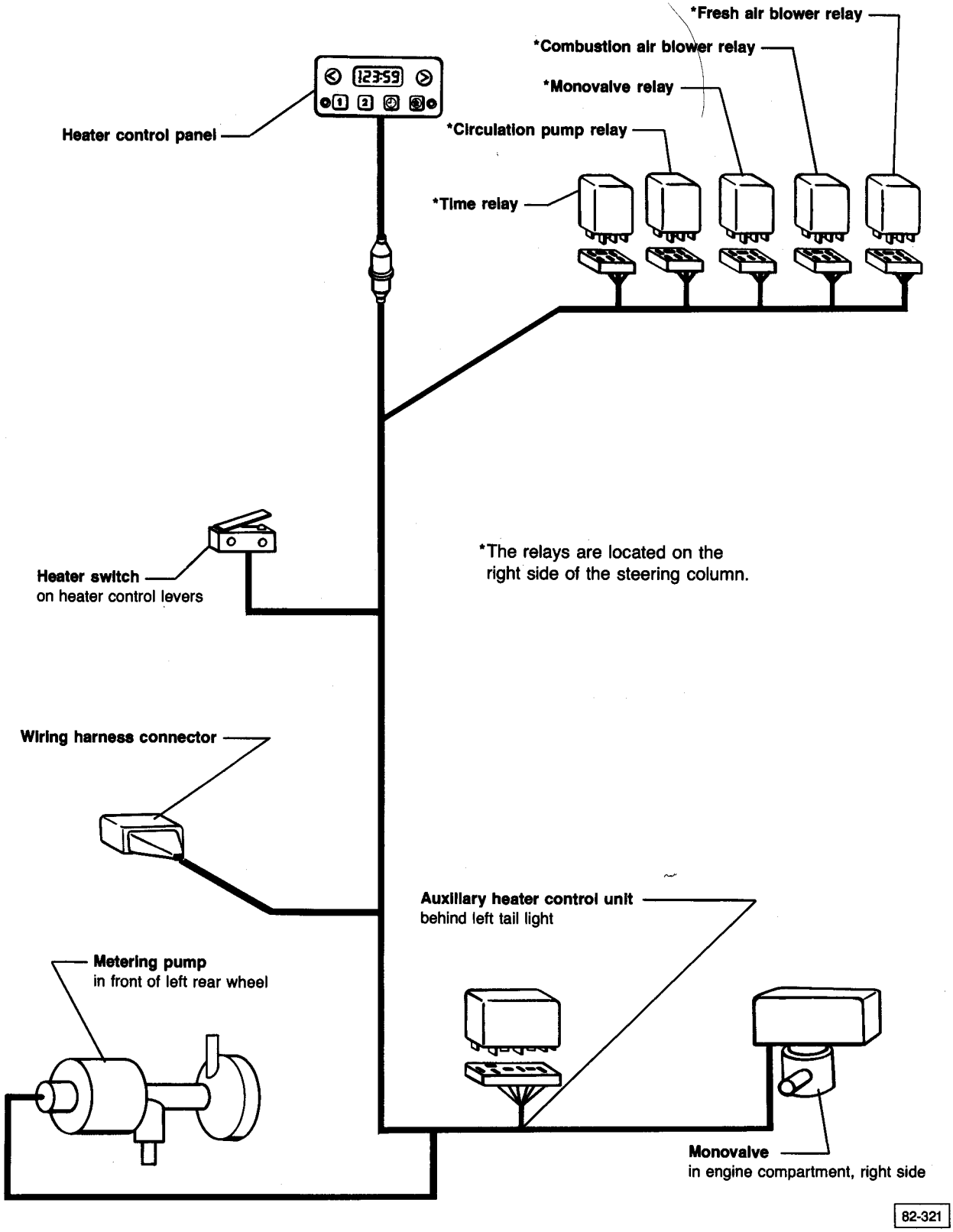

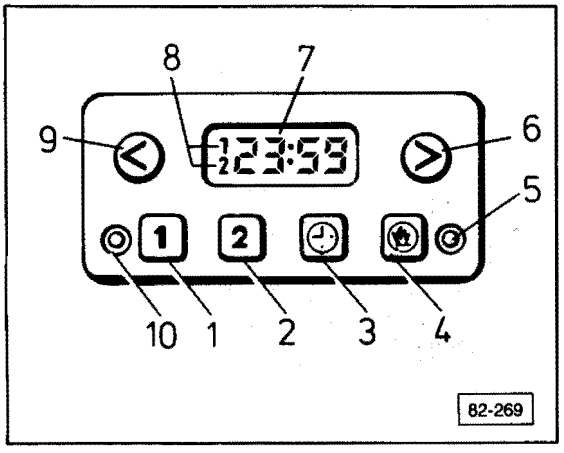

1,2 — buttons for pre-selecting times

3 — time indicator display button

4 — immediate heat button

5 — immediate heat indicator light

6 — clock set button, forward movement

7 — time display

8 — pre-selected time indicators

9 — clock set button, backward movement

10 — pre-selected time ready indicator light (**yellow**)

Indicating time of day

— push button 3
- time of day appears in display as long as button is depressed

— release button 3
- indicator goes out or pre-selected time will appear if one has been selected (this will last about two seconds)

Setting time of day

If the display is flashing 8:88 in the indicator field 7, or if time indicated is not the same as actual time,

— push and hold down button 3 and at the same time push either of the two time setting buttons 6 or 9 to set the correct time

Immediate heating operation

— push button 4 any time to start or stop heating
- green indicator light 5 lights when heat is switched **ON**

Heating begins when the engine coolant temperature is below 80°C (176°F) and the heater output lever is pushed all the way to the right until stop.

Heating is limited to 30 minutes.

more

Pre-selecting time for heat operation

A specific time to start heating may be selected up to 24 hours in advance.

Setting pre-selected time

— push button 1 or 2
- respective pre-selected indicator time will appear in display (7) with numeral 1 or 2 at display area 8
- yellow ready light lights

— change pre-selected time by pushing button 9 or 6
- after 20 seconds, pre-selected time display shuts **OFF**
- numeral 1 or 2 in the indicator field remains lit
- pre-selected time is now activated

— move heater output lever all the way to right until stop
— switch fresh air blower to position 1

Note

Heater will not operate at pre-selected time unless the heater output lever is in the full right position and the fresh air blower is in position 1.

Cancelling a pre-selected time

— push button 1 or 2
- yellow ready light goes **OFF**
- numeral 1 or 2 in display area 8 will go **OFF**
- pre-selected time is now cancelled

Auxiliary heater BBW 46, operation

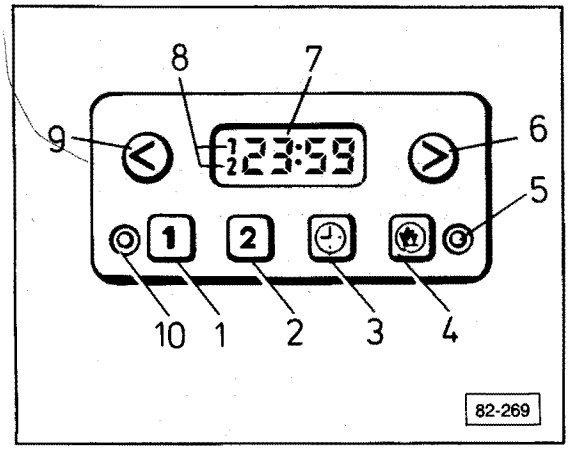

— push button 4 to switch heater **ON**
— slide heater output lever fully to right

The following occurs:

- positive (+) voltage from battery via **Fuse S55** travels to auxiliary heater control panel and through output contact of time relay (17/87) to contact **T6/5** of Auxiliary Heater Control unit
- green "ready" control light lights
- Auxiliary Heater Control Unit switches Glow Plug and Recirculation Pump **ON**
- after pre-glowing (approximately 5 seconds), Metering Pump is switched **ON** by voltage from terminal **T2a/1**

Note

Voltage at **T2a/1** is supplied via **Fuse S24** by Auxiliary Heater Control terminal **T2c/2**.

- a 90 second safety period begins
- fuel advances for approximately 5 seconds and Auxiliary Heater Control Unit **T8/1** sends signal to Combustion Air Blower to run at full speed

During this time, if a flame occurs, (this is normal operation)

- Flame Switch sends signal to Auxiliary Heater Control Unit and Control Unit switches Glow Plug **OFF**
- safety period is automatically reset

Note

If a flame does not occur during the pre-glowing and safety period,

- a new pre-glow period (approximately 30 seconds) and safety period (approximately 90 seconds) are started automatically

Combustion operation

The Auxiliary Heater operates at full load immediately after being switched **ON**.

- temperature sensor resistance increases as temperature rises
- Monovalve separates Auxiliary Heater water circulation from circulation of engine coolant up to temperature of 55°C (131°F) if Auxiliary Heater and vehicle engine operate simultaneously

When water temperature reaches 55°C (131°F) the Auxiliary Heater Control Unit begins to regulate heater operation.

Vehicle fresh air/warm air operation

When water circulation temperature rises above 55°C (131°F), voltage is supplied to terminal **T6/6** of Auxiliary Heater Control Unit.

- Heater Fan Relay and Fresh Air Fan Relay contacts close and Warm Air Blower and Fresh Air Fan operate

When water circulation temperature falls below 50°C (92°F),

- Heater Fan Relay and Fresh Air Fan Relay contacts open and operation of fans stops

Partial load operation

When water circulation temperature rises above 80°C (176°F),

- current to Combustion Air Blower goes through resistor and blower speed decreases
- Metering Pump output decreases by 50%

Full load operation

If the temperature drops below 70°C (128°F) during partial operation,

- Auxiliary Heater Control Unit switches back to full load operation
- Metering Pump operates at full capacity

Regulation pause

If water circulation temperature should rise above 85°C (185°F) during partial load operation, the Auxiliary Heater Control Unit does the following:

- shuts Metering Pump **OFF**

After Flame Switch cools,

- after-run period begins

After-run operation

After-run operation serves to end the combustion operation in an orderly manner. After the flame is extinguished,

- Flame Detector indicates "dark"
- Fresh Air and Warm Air Blowers continue to run
- Combustion Air Blower runs at full load for approximately 60 seconds

Note

The after-run period is always approximately 60 seconds long. It is not shortened by a shut down or rapid reduction of temperature.

Starting Auxiliary Heater after a regulation pause

If the temperature drops below 80°C (176°F) during a regulation pause,

- a new start procedure is automatically begun

When Flame Detector indicates "light,"

- combustion operation begins at full load and switches to partial load operation when the temperature rises above 80°C (176°F)

Shutting heater OFF

During combustion operation,

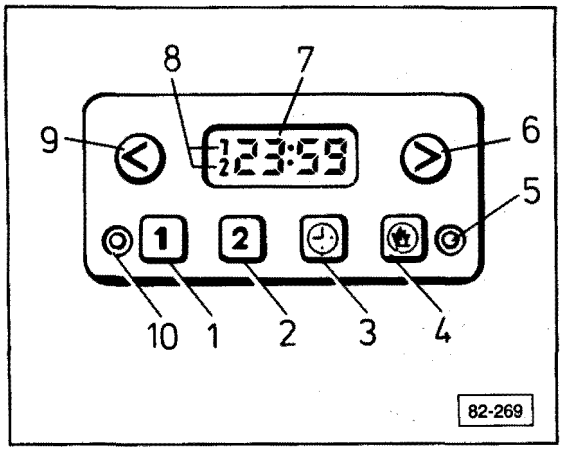

— push button 4 to switch heater **OFF**
- Heater Indicator Light (**green**) goes out
- Metering Pump and Fresh Air/Warm Air blowers shut **OFF**

After Flame Switch indicates "dark,"
- after-run begins

Note

Auxiliary Heater can always be shut **OFF** (even if the Flame Detector switch is defective.) If the Flame Switch does not signal "dark" 80 seconds after shut down, a forced shut down and after-run period will occur.

To reactivate Auxiliary Heater,

— switch Auxiliary Heater **OFF**
— wait one minute
— switch Auxiliary Heater **ON**

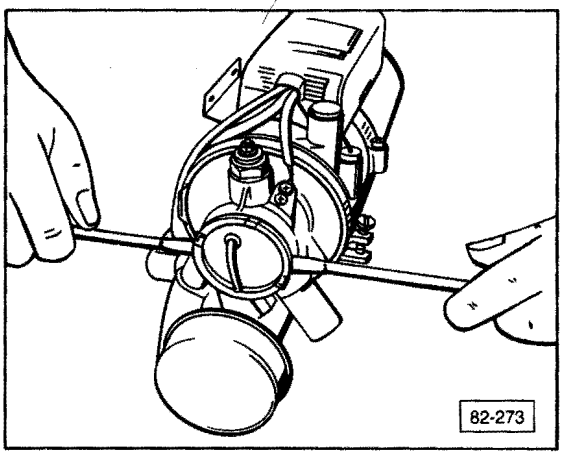

Fig. 1 Felt pad, removing

— remove tension springs
— pry off cover with two screwdrivers in recesses **A**

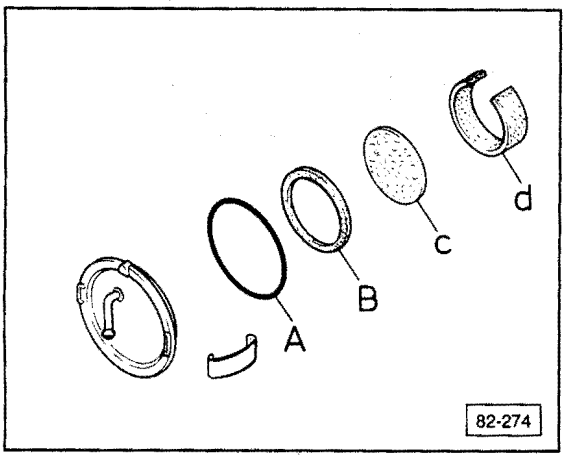

Fig. 2 Felt pad, servicing

Note

O-rings **A** and **B** must be replaced after each disassembly.

Do NOT glue pad **C** into place.

— insert assembly with felt pad into Heater until recesses in ring fit together with tabs on Heater

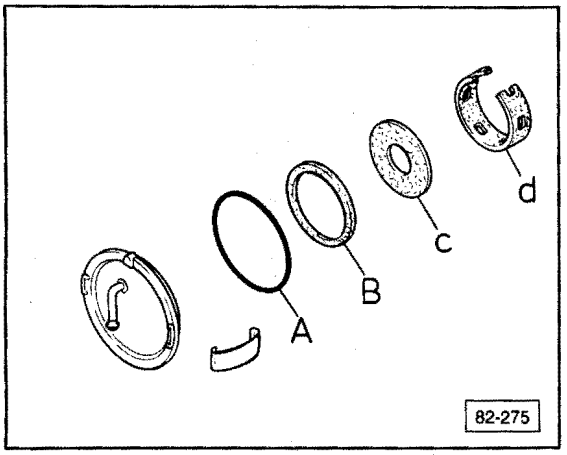

Fig. 3 Felt pad, servicing (Diesel heaters)

Note

O-rings **A** and **B** must be replaced after each disassembly.

Do NOT glue pad **C** into place.

— insert assembly with felt pad into Heater until recesses in ring fit together with tabs on Heater

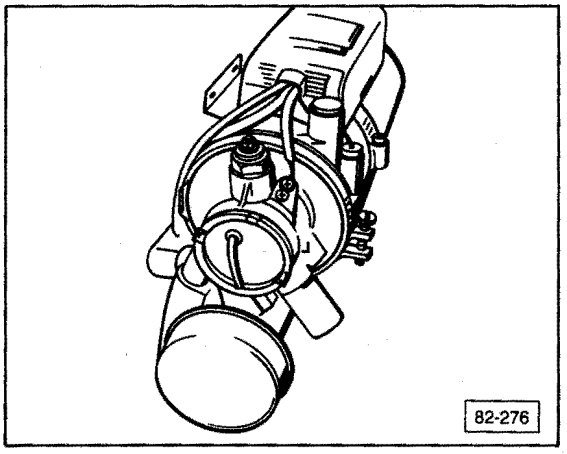

Fig. 4 Felt pad, installing

— slide assembly in noting position of lug **B**

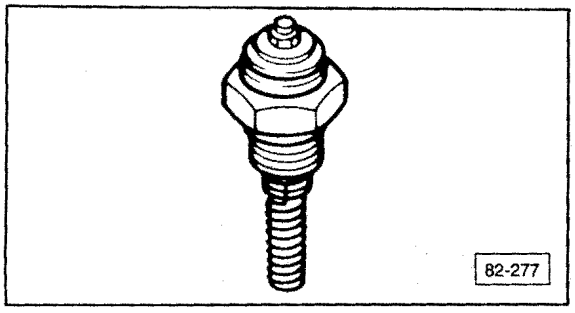

Fig. 5 Glow plug, checking

— disconnect wire to glow plug
— remove glow plug
  • 30 Nm (22 ft lb)

— connect glow plug to external 12V source
— connect jumper wire between nut of glow plug and ground connection of 12V source

— measure amperage draw of glow plug using ohmmeter
  • approximately **20A ± 10%**

Note

Remove carbon deposits on glow plug by glowing the plug and carefully scraping.

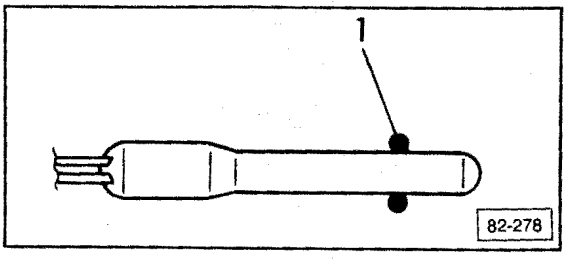

Fig. 6 Flame Switch, removing/installing

Removing

— remove oval-head screw
— pull Flame Switch out
— remove wires

Installing

— slide O-ring on to tip of Flame Switch at **1**
— install oval head screw
— install wire

CAUTION

Do not reverse polarity of Flame Switch wires.

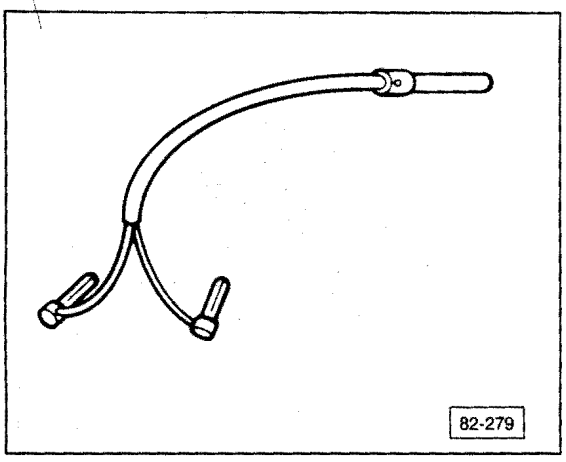

Fig. 7 Flame switch, checking

— switch heater **ON**

If Auxiliary Heater switches to restart after 30 seconds (without after-running),

— repair short circuit in wiring to Flame Switch

If Auxiliary Heater shuts off 120 seconds after successful start and switches to restart (without after-run) after 240 seconds,

— repair break in wiring to Flame Switch

Temperature sensor, removing/ installing

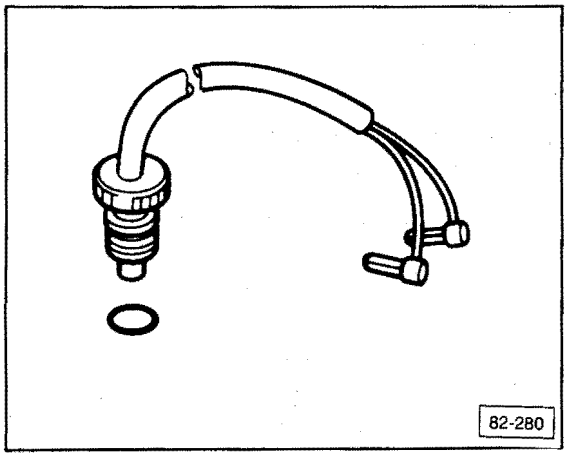

CAUTION

Before removing Temperature Sensor, open cap on engine coolant expansion tank to relieve pressure on engine cooling system.

— remove wires from Temperature Sensor
— unscrew Temperature Sensor
  • 30 Nm (22.0 ft lb)

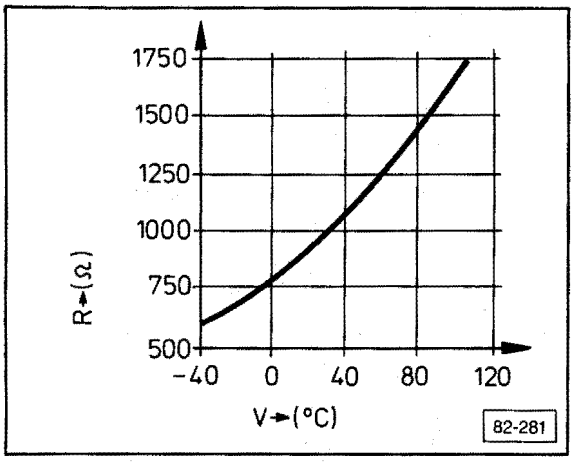

Fig. 9 Temperature Sensor, checking

This temperature sensor is a Positive Temperature Coefficient (PTC) type resistor.

— connect ohmmeter between terminal end and body of Temperature Sensor

— compare measured resistance and temperature of Temperature Sensor with graph
  • difference between measured resistance and graph must not be more than 1.0mA

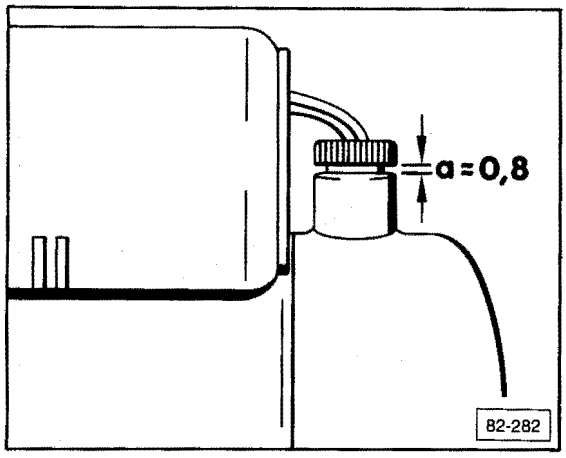

Fig 10. Fuse S24, removing/installing

CAUTION

Before removing Fuse S24, open cap on engine coolant expansion tank to relieve pressure on engine cooling system.

— disconnect wires from fuse
— unscrew fuse
— check fuse for continuity with ohmmeter

Note

Fuse S24 is installed and tightened by hand. Make sure that the fuse point contacts the Heater tube.

— screw fuse in until cap of fuse is approximately 0.8mm from body of heater
  • **a** = 0.8mm (.003 in)

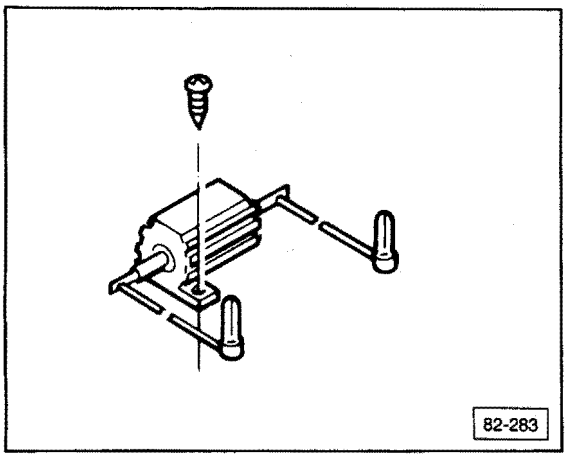

Fig. 11 Series resistor (for partial load operation), removing/installing/checking

CAUTION

Before removing series resistance, open cap on engine coolant expansion tank to relieve pressure on engine cooling system.

— remove oval head screw
— remove wire connectors
— measure resistance with ohmmeter
  • **3.3 ohm ± 3%**
— install in reverse order of removal

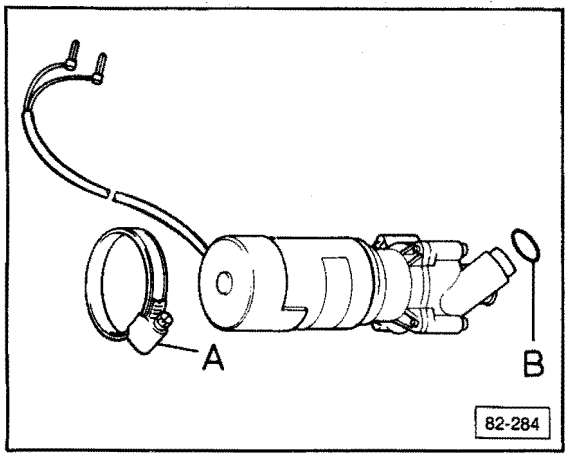

Fig. 12 Recirculation pump, removing/installing

— mark electrical wires (for identification) and remove
— loosen clamp **A** and remove pump

Installing

— insert Recirculation Pump slanted connection into Heater Core
— install clamp

Note

Do not reverse wires for Recirculation Pump or it will run in the wrong direction.

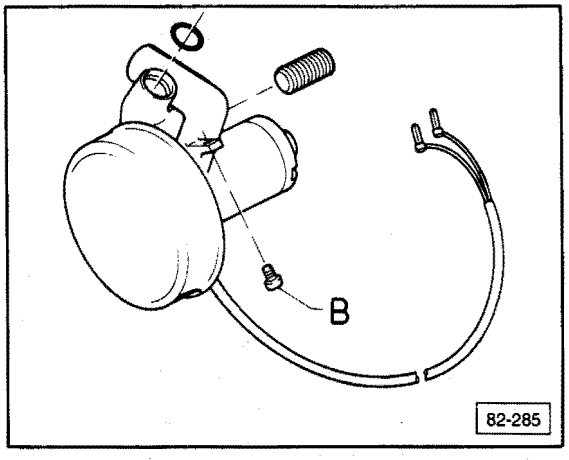

Fig. 13 Combustion Air Blower, removing/ installing

— remove air intake sound dampener
— mark electrical wires (for identification) and remove
  • loosen screw **B** and remove combustion air blower

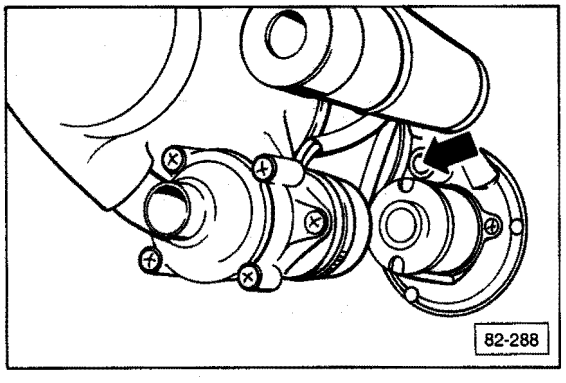

Fig. 14 Combustion Air Blower, adjusting

CAUTION

The Combustion Air Blower is pre-set at the factory. The adjustment screw (**arrow**) should not be moved.

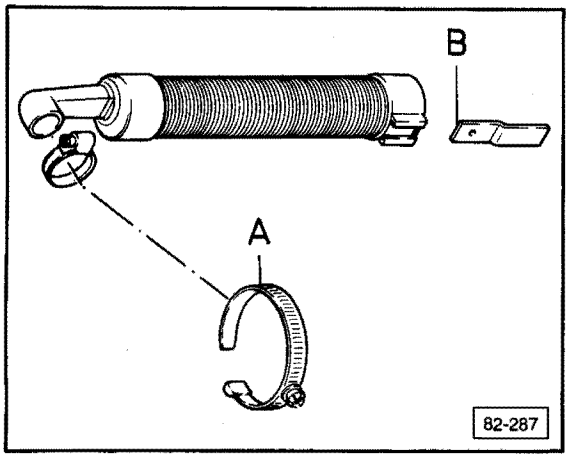

Fig. 15 Intake air noise dampener, removing/installing/checking

— unclip reuseable plastic band **A**
— remove noise dampener from bracket **B**
— check noise dampener for cracks

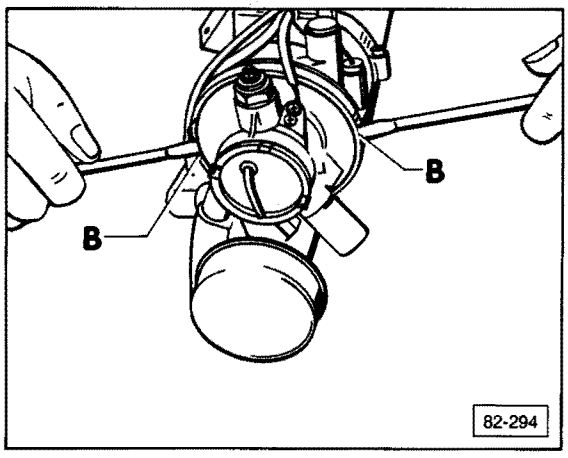

Fig. 16 Flame head, removing

CAUTION

Before removing Flame head, open cap on engine coolant expansion tank to relieve pressure on engine cooling system.

— pinch off water hoses to heater
— unscrew clamps
— insert screwdrivers at recesses **B** and pry off Flame Head

— clean dirt accumulation from all parts

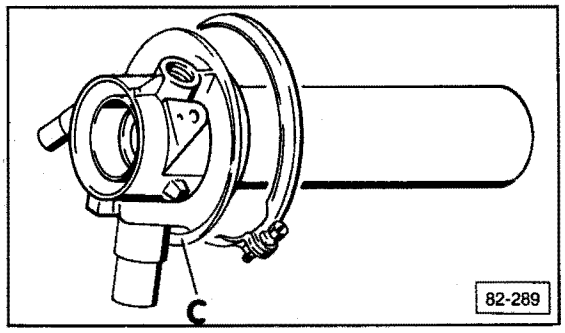

Fig. 17 Flame head, installing

— coat area between Flame Head and heat tube (**C**) with sealing paste
— install in reverse order of removal

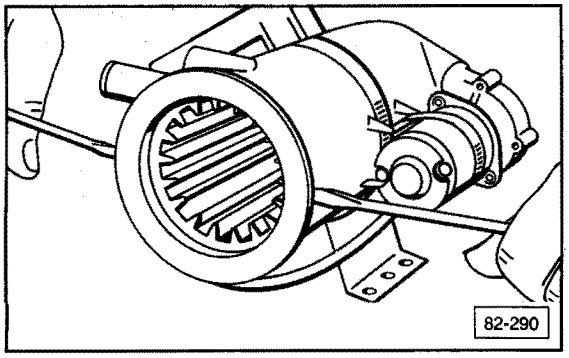

Fig. 18 Heater core, removing

CAUTION

Before removing Temperature Sensor and Fuse S24, open cap on engine coolant expansion tank to relieve pressure on engine cooling system.

— remove Temperature Sensor and Fuse S24
— remove Flame Head
— insert two screwdrivers into recesses and pry Flame Head out
— clean combustion residue off with water spray and brush

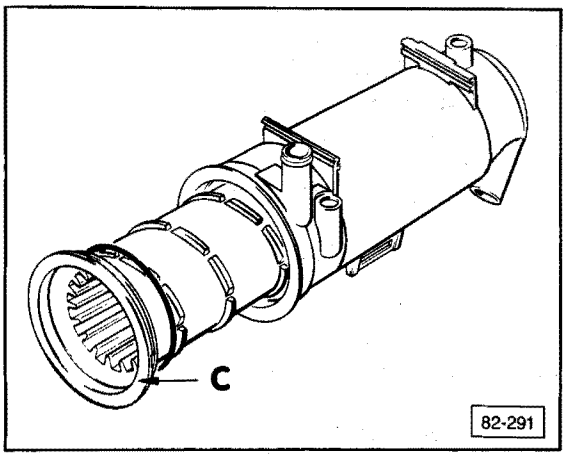

Fig. 19 Heater core, installing

— coat area between Flame Head and Heat Tube at **C** with sealing paste
— install Heater Core in reverse order of removal

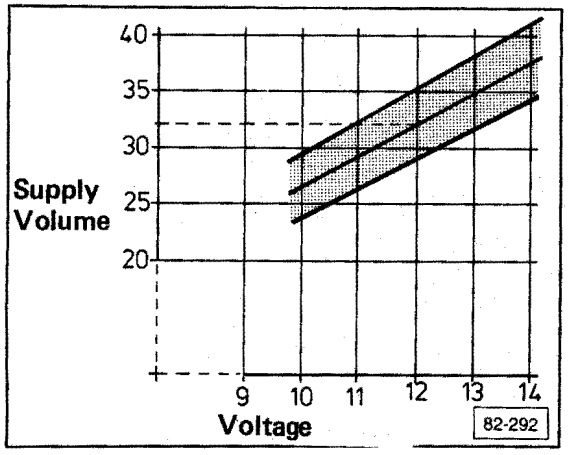

Fig. 20 Metering Pump, checking flow rate

— remove connector to glow plug
— remove fuel feed hose from heater and place open end in measuring glass
— connect voltmeter between contacts **T2a/2** and **T6/4** of Auxiliary Heater Control Unit
— switch Auxiliary Heater **ON**
  • after 90 seconds Auxiliary Heater switches **OFF**
  • automatic re-start begins
— switch Auxiliary Heater **ON** again
— measure fuel volume after two 90 minute periods and compare voltage and volume with graph

For example,

If voltage measured at Auxiliary Heater is 12.0V,

Then, volume output must fall between approximately 29ml and 35ml after two 90 minute measuring periods.

Engine coolant system, draining/ refilling

CAUTION

Use coolant Part No. **ZVW 237 102** which has corrosion inhibiting agents especially formulated to prevent corrosion damage to the water jacket sealing surfaces of the cylinder head.

Anti-freeze other than specified by Volkswagen may cause corrosion of the cooling system thus leading to engine overheating and damage.

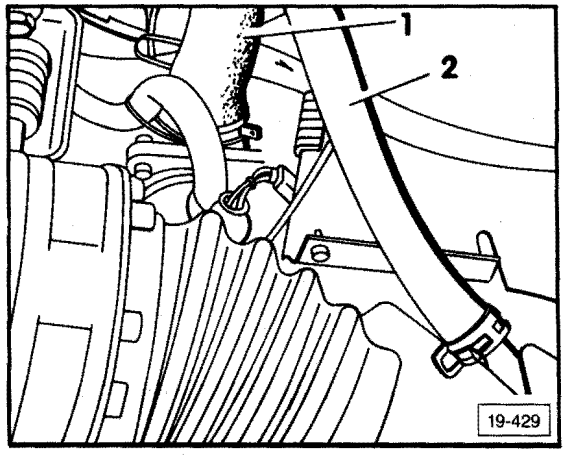

— close hose **1** from radiator to thermostat with hose clamp
— close hose **2** from heat exchanger to coolant pipe with hose clamp

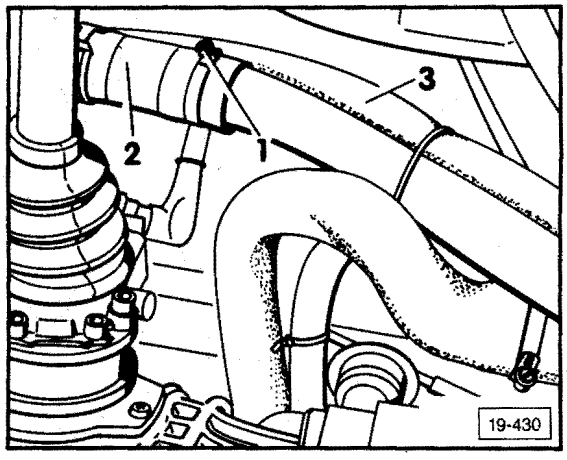

— loosen hose clamp **1**, close hose **2** from radiator to distribution piece with hose clamp
— close hose **3** from heat exchanger to distribution piece with hose clamp
— drain coolant at drain plugs (Fig. 1)
— open coolant expansion tank cap

CAUTION

Coolant/antifreeze **must not** be reused when replacing engine, cylinder head, cylinder head gasket, radiator and heater core.

Refilling

Coolant mixture ratio

- coolant capacity 17.5 ltr (18.4 US qt)

Note

Cooling system is filled at factory with mixture of water and antifreeze/corrosion protective solution.
Coolant mixture should be used all year.
When replacing coolant only use ethylene glycol based antifreeze (phosphate-free).
Due to higher boiling point, coolant is an aid to operating on full load, particularly in warm climates

Outside temperature	Antifreeze	Water
−25°C (−13°F)	7.0 ltr (7.4 US qt)	10.5 ltr (11 US qt)
−35°C (−30°F)	8.75 ltr (9.2 US qt)	8.75 ltr (9.2 US qt)

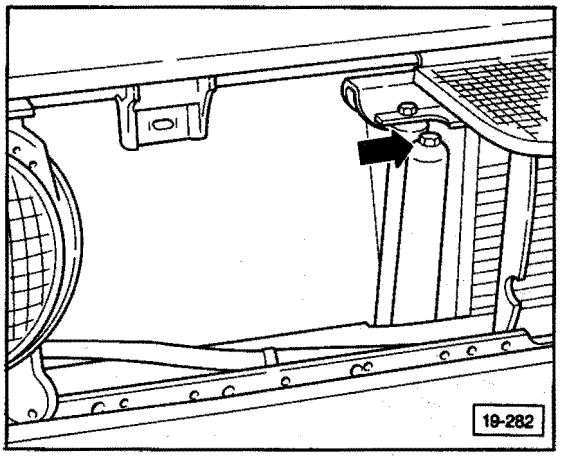

— set heater control to maximum heating
— open control valve for auxiliary heater under rear seat
— remove radiator grille
— raise vehicle approximately 40 cm (15-3/4 in.) at front under cross-member with floor jack and wooden support or equivalent
— open bleeder screw (**arrow**) on radiator

CAUTION

Coolant/antifreeze **must not** be reused when replacing engine, cylinder head, cylinder head gasket, radiator and heater core.

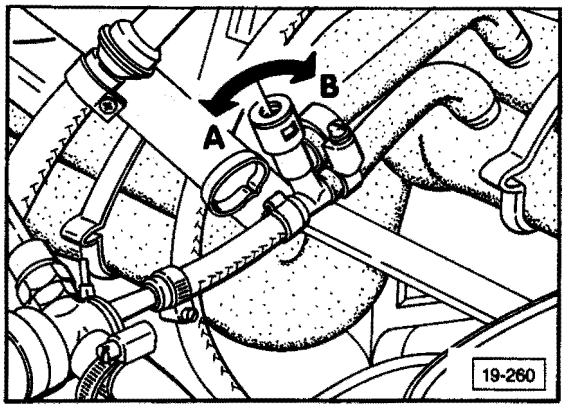

— open bleeder valve in engine compartment
A = open
B = closed

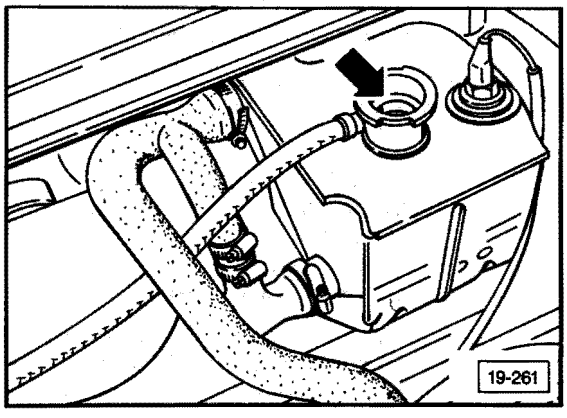

— remove electrical connector from monovalve
— fill coolant until expansion tank is full (approximately 4-5 ltr/4.25-5.3 US qt)
— start engine
— at approximately 2000 RPM, top up tank until coolant flows from bleeder screw on radiator (bubble free)
— add coolant until tank is full and close tank with cap
— turn ignition off and start engine again after approximately 20 seconds
— at about 2000 RPM open cap of expansion tank
— close bleeder screw on radiator when coolant flows out
— add coolant if necessary and close expansion tank
— close bleeder valve in engine compartment
— switch engine off

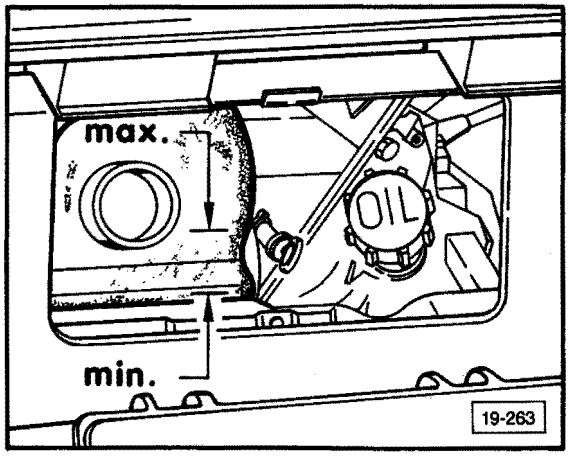

— refill overflow tank to maximum mark (**arrow**)
— reconnect wiring connector to Monovalve

Index

— A/C adapter valve VAG 1637
installing 87.15
— A/C components
locations 87.2
— A/C compressor (Sanden SD510)
replacing 87.16
— A/C evaporator
removing/installing 87.14
— A/C evaporator housing
assembling/disassembling 87.12
removing 87.10
— Air distribution system
components 87.9
outlets, removing 87.13
— Expansion valve
removing/installing 87.14
— Fuses
locations 87.4
— Refrigerant system
capacity 87.7
cautions and warnings 87.7
controls 87.6
discharging 87.8
— Relays
locations 87.5

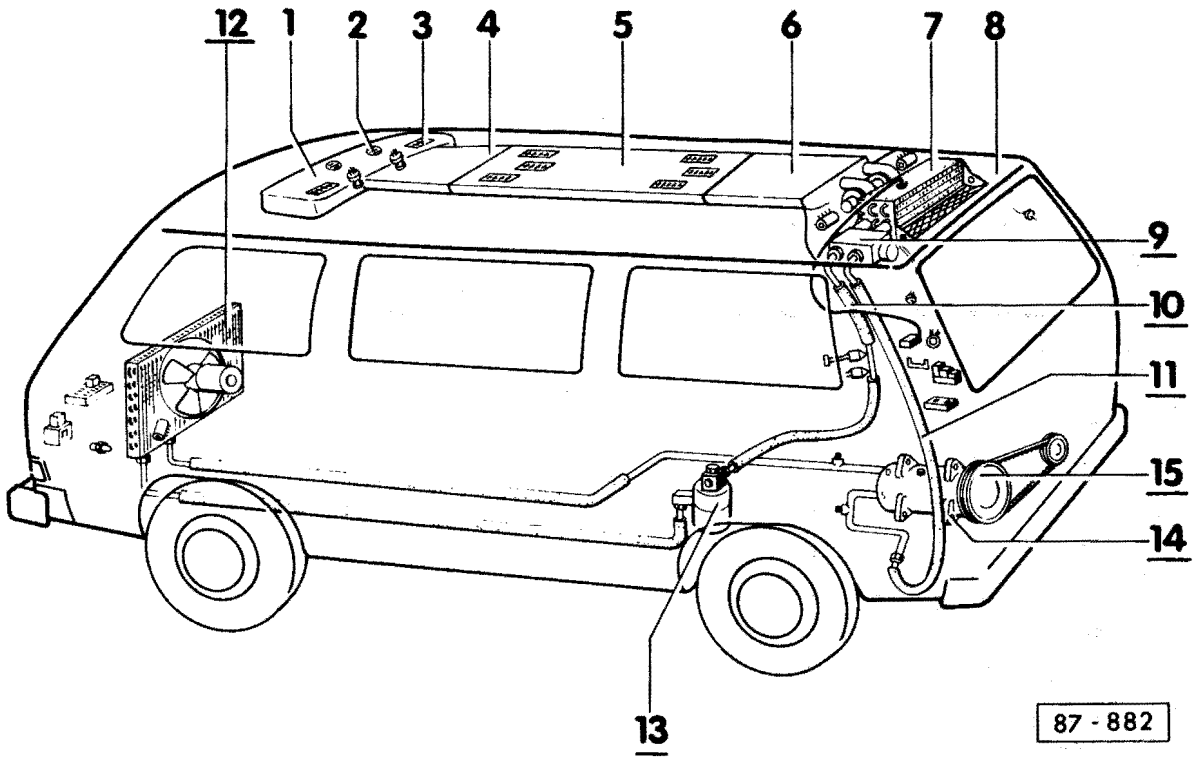

1 — **Front housing**

2 — **Round air outlet**

3 — **Outlet**

4 — **Front air duct**

5 — **Center air duct**

6 — **Rear air duct**

7 — **Evaporator housing**

8 — **Water drain tubes**

9 — **Expansion valve**

10 — **Low pressure refrigerant hose**

11 — **High pressure refrigerant hose**

12 — **Condenser**
- condenser can be lowered from vehicle with radiator without discharging A/C refrigerant system

13 — **Receiver/drier**

14 — **A/C compressor**

15 — **A/C compressor clutch**

Note

Discharge A/C refrigerant system before removing components represented with underlined numbers

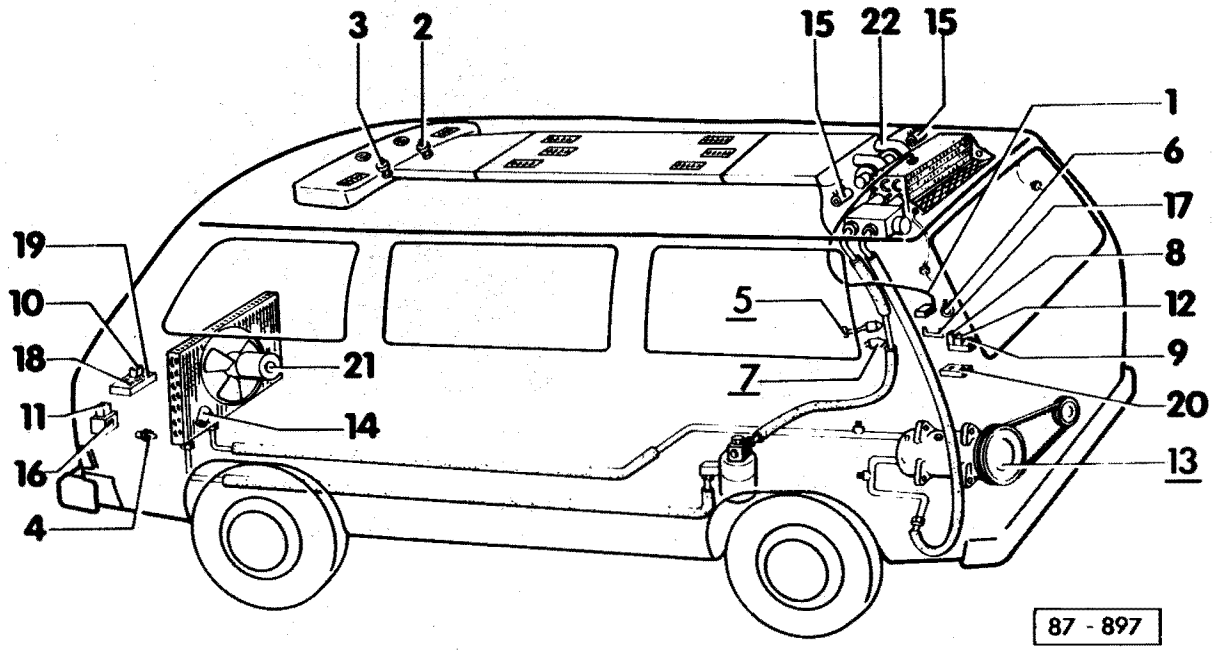

1 — A/C thermostat
2 — A/C switch
3 — Evaporator fan switch
4 — Radiator cooling fan thermoswitch
5 — A/C refrigerant high pressure switch
6 — Ambient air temperature switch
7 — A/C refrigerant low pressure switch
8 — A/C relay
9 — A/C compressor clutch relay
10 — Radiator cooling fan relay, 2nd stage
11 — Radiator cooling fan relay, 3rd stage
12 — Evaporator fan relay
13 — A/C compressor clutch
14 — Radiator cooling fan series resistance
15 — Evaporator fan series resistance
16 — Radiator cooling fan fuse
17 — Fuse S0 (50A)
18 — Fuse S1 (30A)
19 — Fuse S12 (15A)
20 — Fuse S51 (20A) for evaporator fan
21 — Radiator cooling fan
22 — Evaporator fan

Note

As of the 1987 Model Year, the A/C refrigerant high pressure service valve was changed.

On the Vanagon, the service valve location is under the left rear evaporator panel.

On the Vanagon Camper, the service valve is located in the left rear cabinet.

Components

Fuse locations

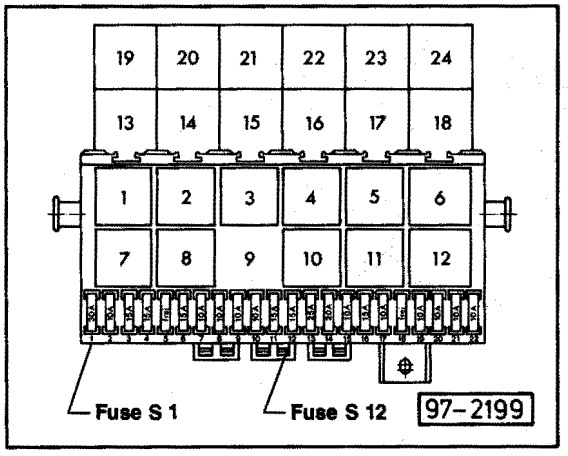

Fuse/relay panel

Fuse **S1**
- 30A — to Rad. cool. fan thermoswitches and Rad. cool. fan relay 2nd stage

Fuse **S12**
- 15A — to Fresh air fan and A/C switch

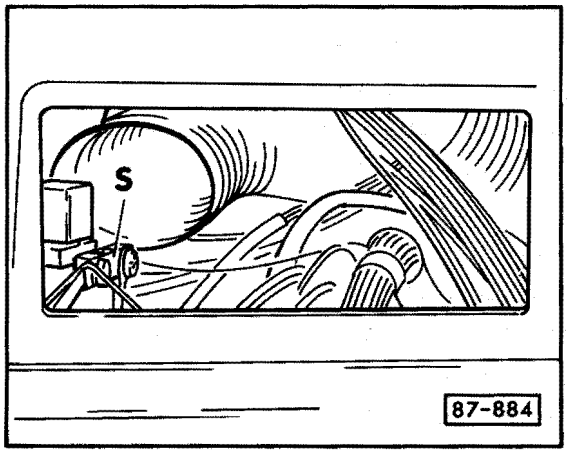

Additional Fuse/relay adaptor (behind left air vent in instrument panel)

Fuse **S**
- 50A — to Rad. cool. fan relay 3rd stage

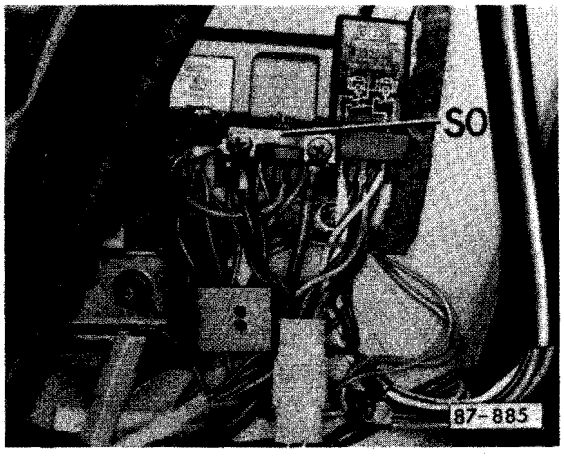

Additional Fuse/relay panel (behind left rear 'D' pillar cover)

Fuse **S0**
- 50A — to A/C relay and evaporator fan relay

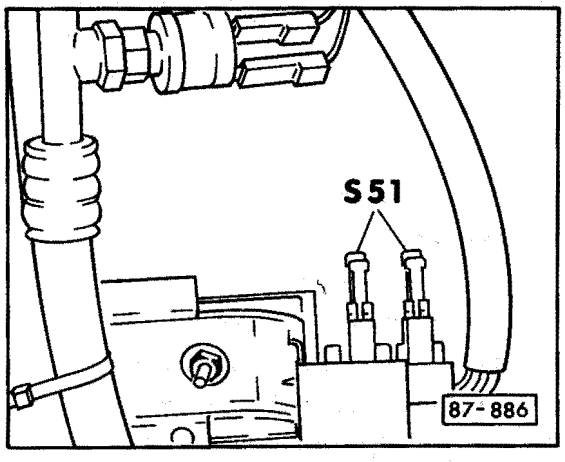

Additional Fuse/relay panel (behind left rear 'D' pillar cover)

Fuses **S51**
- 20A — one fuse for each A/C evaporator fan

Relay locations

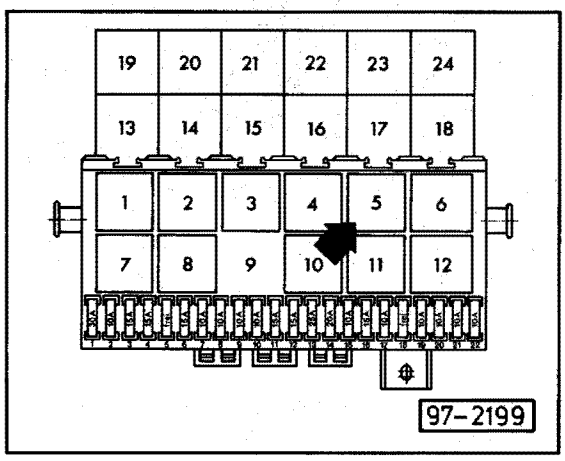

Fuse/relay panel

Radiator cooling fan relay 2nd stage (**arrow**)

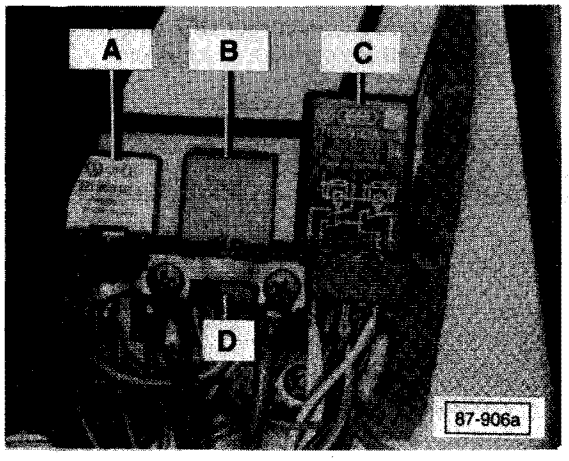

Additional Fuse/relay panel (behind left rear 'D' pillar cover)

A — A/C compressor clutch relay

B — Evaporator fan relay

C — A/C relay

D — Fuse S0

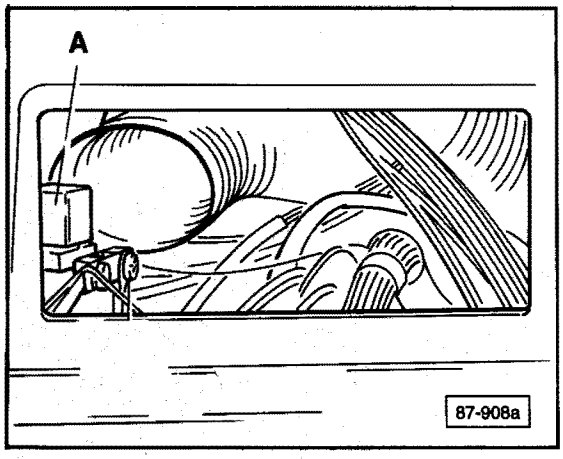

Additional Fuse/relay panel (behind left front fresh air vent)

Picture with vent removed
A — Radiator cooling fan relay 3rd stage

Radiator cooling fan series resistance

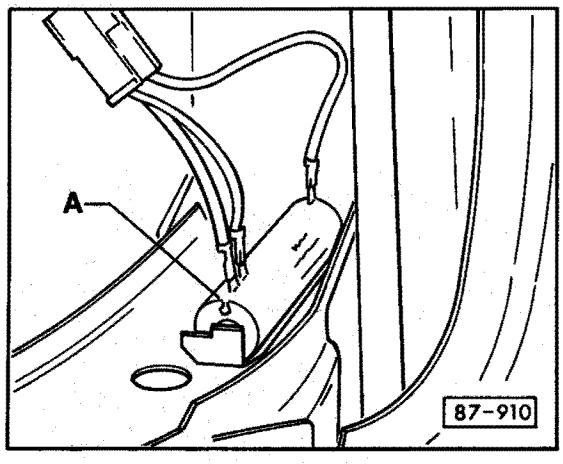

Radiator cooling fan series resistance

- behind left headlight

A — Resistor block

A/C refrigerant system controls

Locations

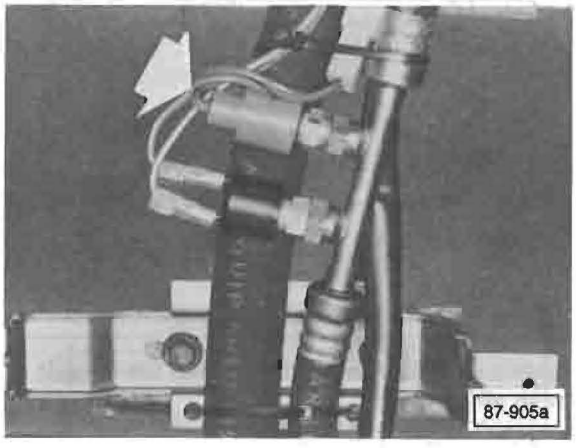

A/C refrigerant high pressure switch (arrow)

- switches Rad. cool fan to higher speed if refrigerant pressure becomes too high

Opens
- 12.0 bar (174.0 psi)

Closes
- 14.5 bar (210.2 psi)

Thread size
- 1/8" - 27 NPT

Torque
- 25.0 Nm

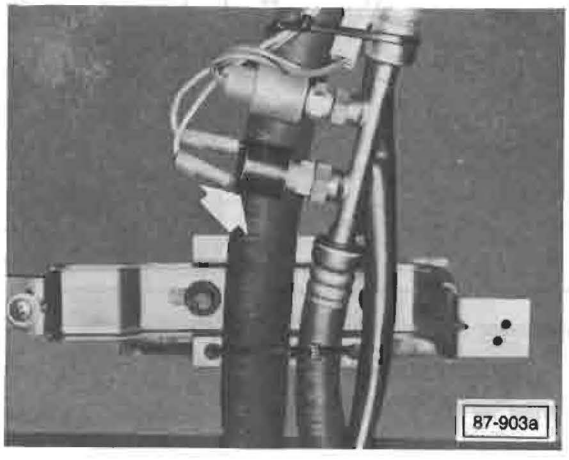

A/C refrigerant low pressure switch (arrow)

- switches A/C compressor clutch **OFF** when refrigerant pressure is too low

Opens
- 2.0 bar + 0.3 bar (29.0 psi + 4.3 psi)

Closes
- 3.0 bar + 0.3 bar (43.5 psi + 4.3 psi)

Thread size
- 3/8" - UNF

Torque
- 20.0 Nm

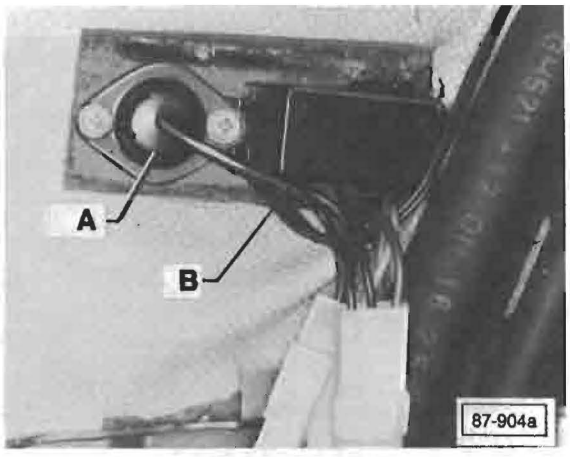

Ambient temperature switch and A/C thermostat (behind left rear 'D' pillar cover)

A — Ambient temperature switch
- switches A/C compressor **OFF** when outside temperature is under 38°F

B — A/C thermostat
- switches A/C compressor **OFF** when evaporator temperature reaches pre-determined value

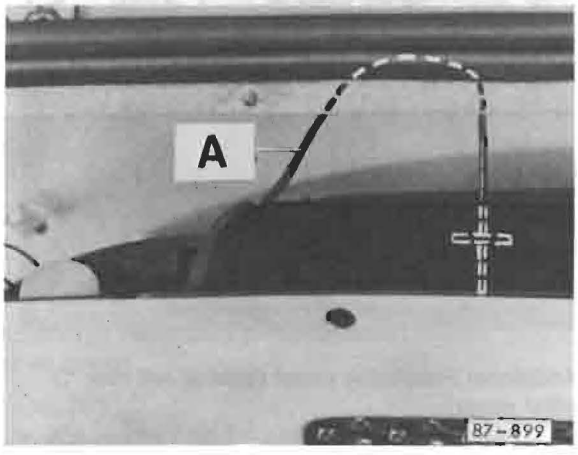

A/C thermostat capillary tube (A)

– insert through hole in upper evaporator housing
- approx. 50mm (2.0 in)

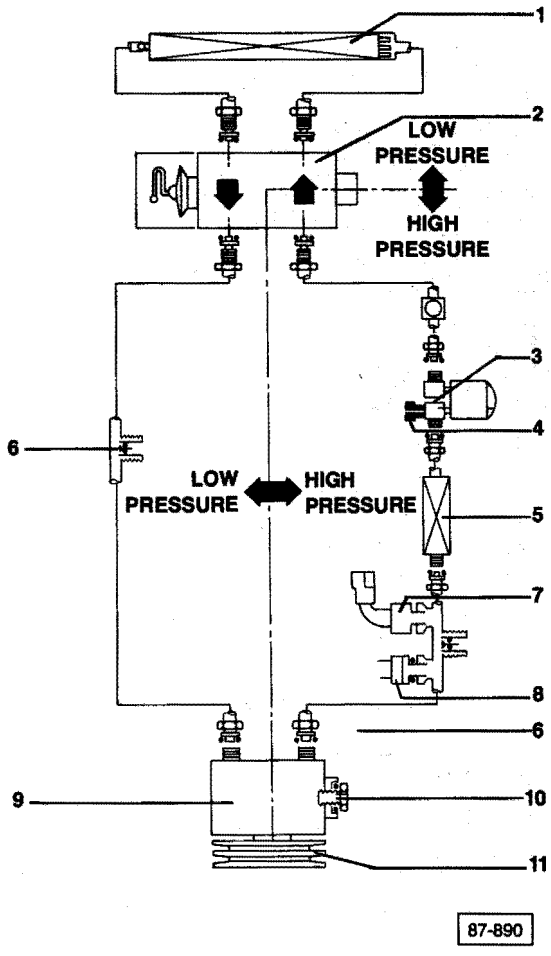

1 — **Evaporator**
2 — **Expansion valve**
3 — **Receiver/drier**
4 — **Safety plug**
5 — **Condenser**
6 — **Service valve**
7 — **A/C refrigerant high pressure switch**
8 — **A/C refrigerant low pressure switch**
9 — **A/C compressor**
10 — **Drain plug**
11 — **A/C compressor clutch**

Refrigerant R-12 capacity
- 1450 grams (50.75 oz)

Refrigerant oil
- evaporator 2.02 oz
- accumulator 0.3 oz
- high pressure hose 0.3 oz
  low pressure hose o.3 oz
- compressor 5.07 oz

WARNING

Always wear safety goggles when charging or discharging system.

Be sure work area is well ventilated. R-12 is heavier than air and can accumulate in areas of poor air circulation.

Avoid inhaling fumes when using flame-type leak detector. R-12 becomes poisonous gas after coming into contact with open flame

CAUTION

Always discharge refrigerant from air conditioner system before loosening connections, hoses, etc.

CAUTION

Discharge refrigerant from system when it is necessary to weld near refrigerant hoses with arc or resistance welding systems. During electrical welding process invisible ultraviolet rays are given off which penetrate refrigerant hoses and decompose refrigerant

Note

Plug all openings in system when removing/replacing parts. This prevents entry of dirt and moisture which may foul system.

Drops of moisture may cause expansion valve to ice up, blocking refrigerant flow and stopping cooling action

Refrigerant system, discharging

Note

Follow safety precautions on pg 87.7 when discharging or charging A/C refrigerant system

— disconnect wires at A/C compressor

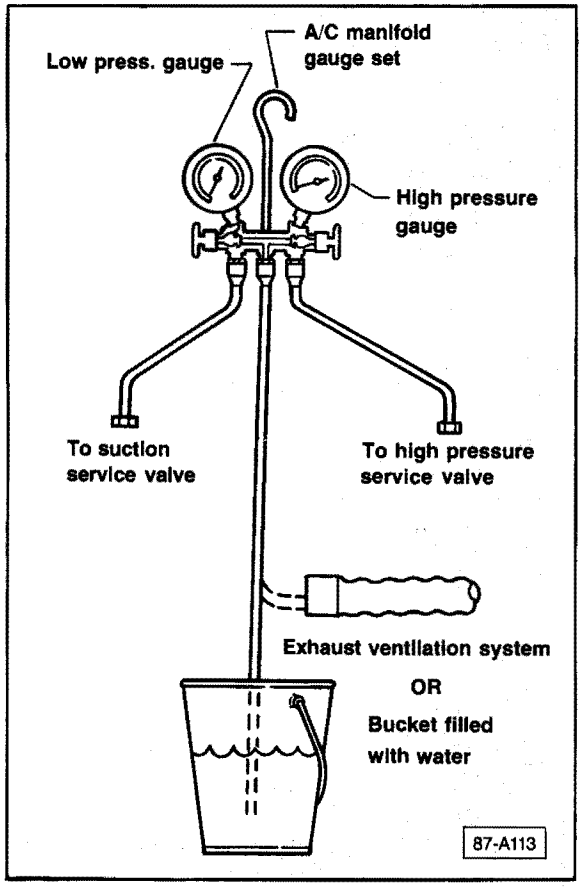

— close both valves on A/C manifold gauge set

WARNING

Always wear safety goggles when charging or discharging system. Be sure work area is well ventilated. Refrigerant-12 is heavier than air and can accumulate in areas of poor air circulation.

Avoid inhaling fumes when using flame type leak detector. Refrigerant-12 becomes poisonous gas after coming into contact with open flame.

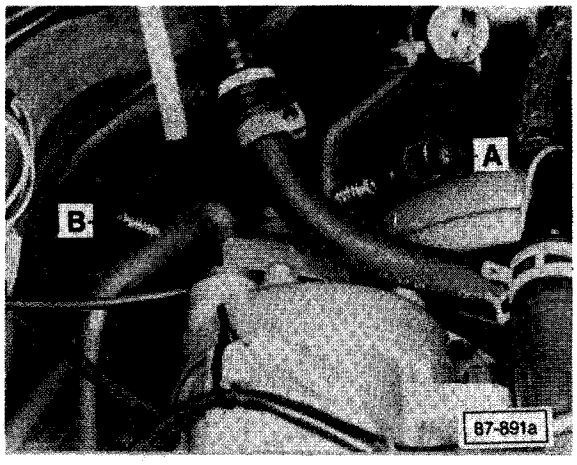

— connect hose from high pressure gauge to high pressure service valve (**A**)
— connect hose from low pressure gauge to suction service valve (**B**)

— open low pressure gauge valve until bubbles are visible in water or hiss is heard from discharge hose
— open high pressure valve slightly

CAUTION

Discharge A/C refrigerant system slowly to prevent loss of refrigerant oil

— close manifold gauge valves when refrigerant stops flowing

Air distribution system

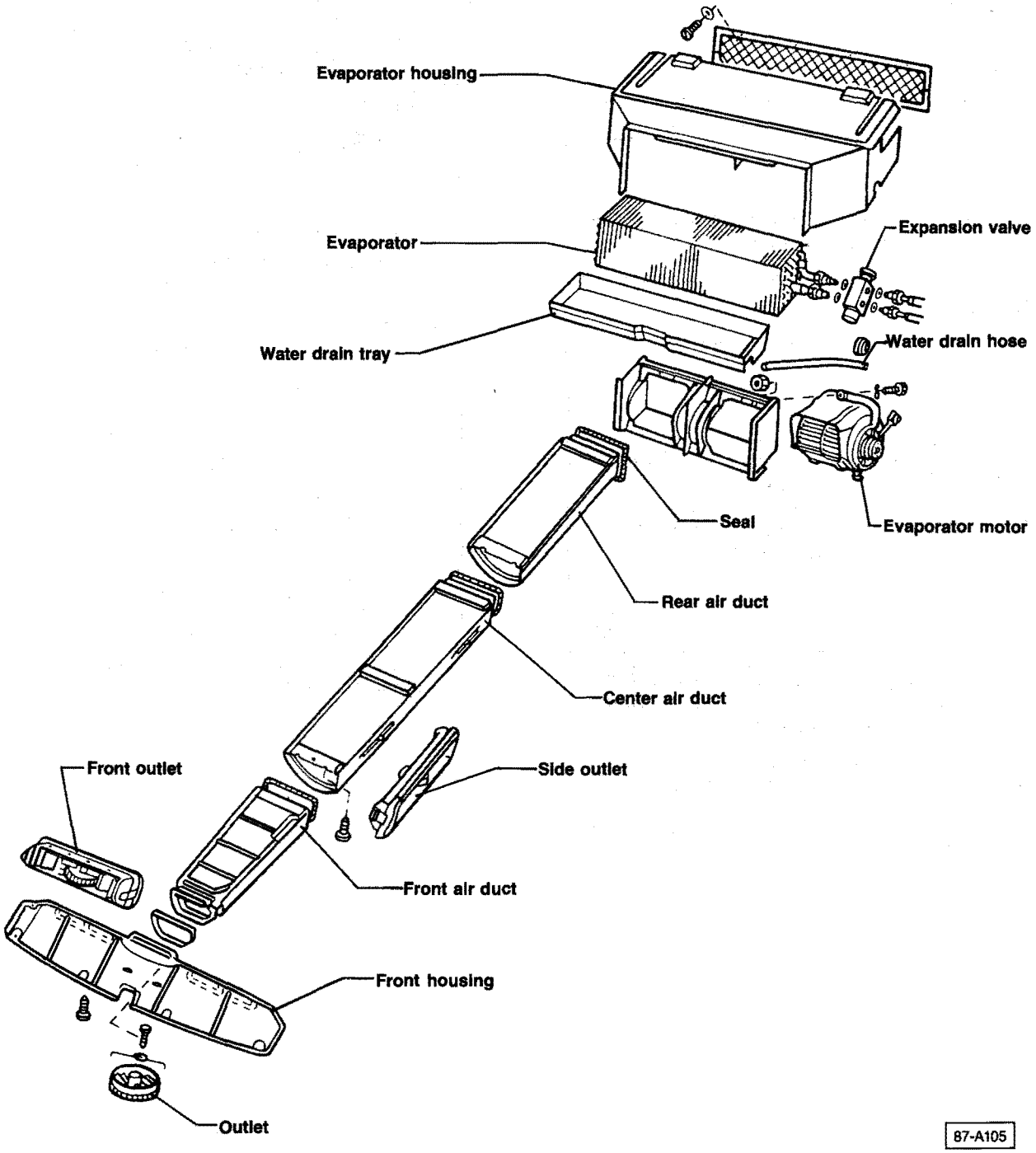

A/C evaporator housing, removing

Work sequence

CAUTION

Before starting to work on any part of electrical system, disconnect battery ground strap

Note

It is possible to lower A/C evaporator housing without discharging A/C refrigerant system.

Discharge A/C refrigerant only when replacing parts in refrigerant system.

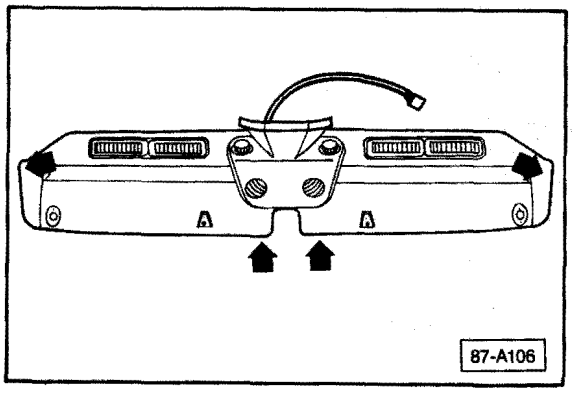

— remove sunvisors and sunvisor retaining clips
— remove front housing attaching screws (**arrows**)
— lower front housing and front air duct

— disconnect wiring connectors to A/C switches
— remove front housing and front air duct

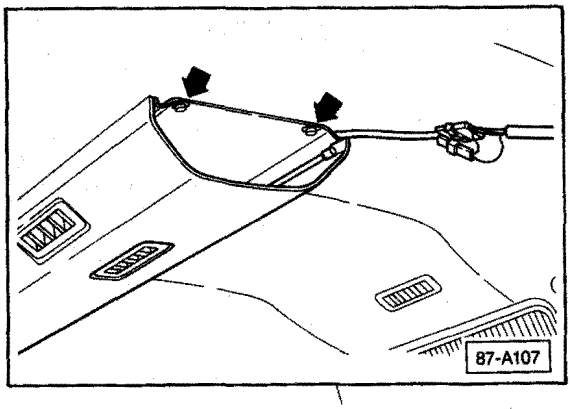

— remove center air duct attaching screws (**arrows**)
— remove center air duct

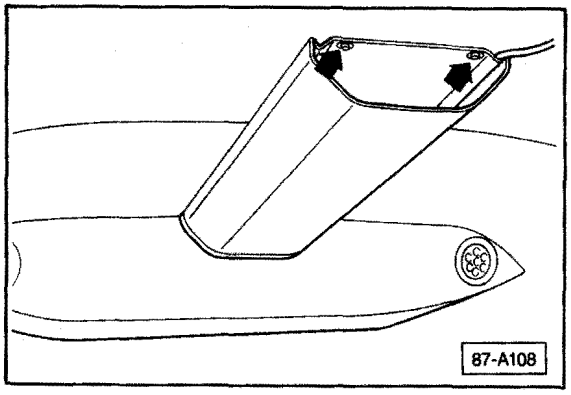

— remove rear air duct attaching screws (**arrows**)
— remove rear air duct

more

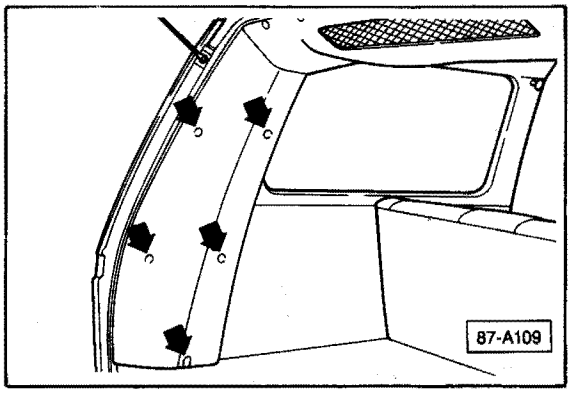

— remove left side rear trim panel screws (**arrows**)
— remove trim panel

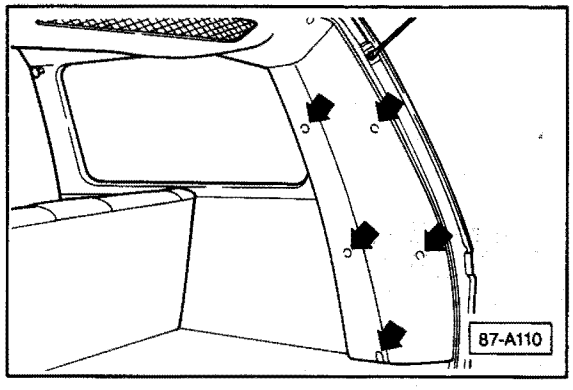

— remove right side rear trim panel screws (**arrows**)
— remove trim panel

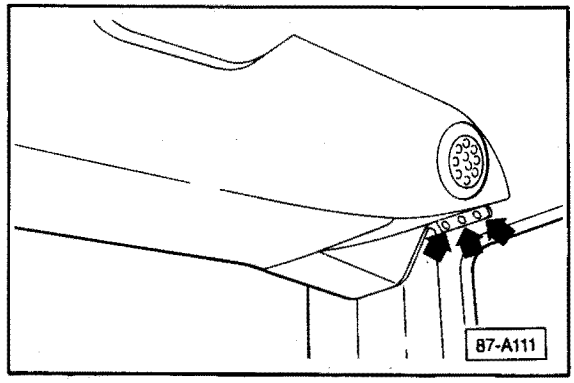

— support evaporator housing with universal lift crane
— remove left side evaporator housing attaching bolts (**arrows**)

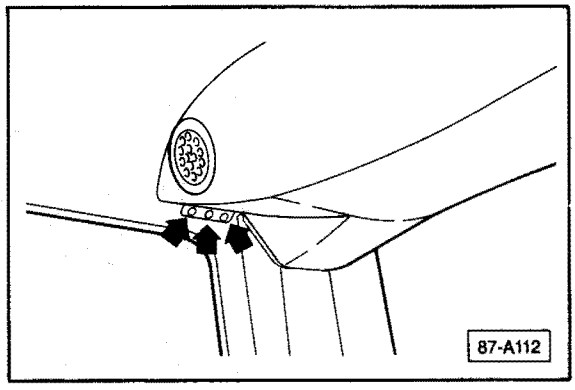

— remove right side evaporator housing attaching bolts (**arrows**)
— lower evaporator housing
— remove evaporator housing covers
— remove evaporator

Installing

— install in reverse order of removal
— re-charge A/C refrigerant system

Evaporator housing, assembling/disassembling

Note

Evaporator housing can be lowered and disassembled without discharging A/C refrigerant system.

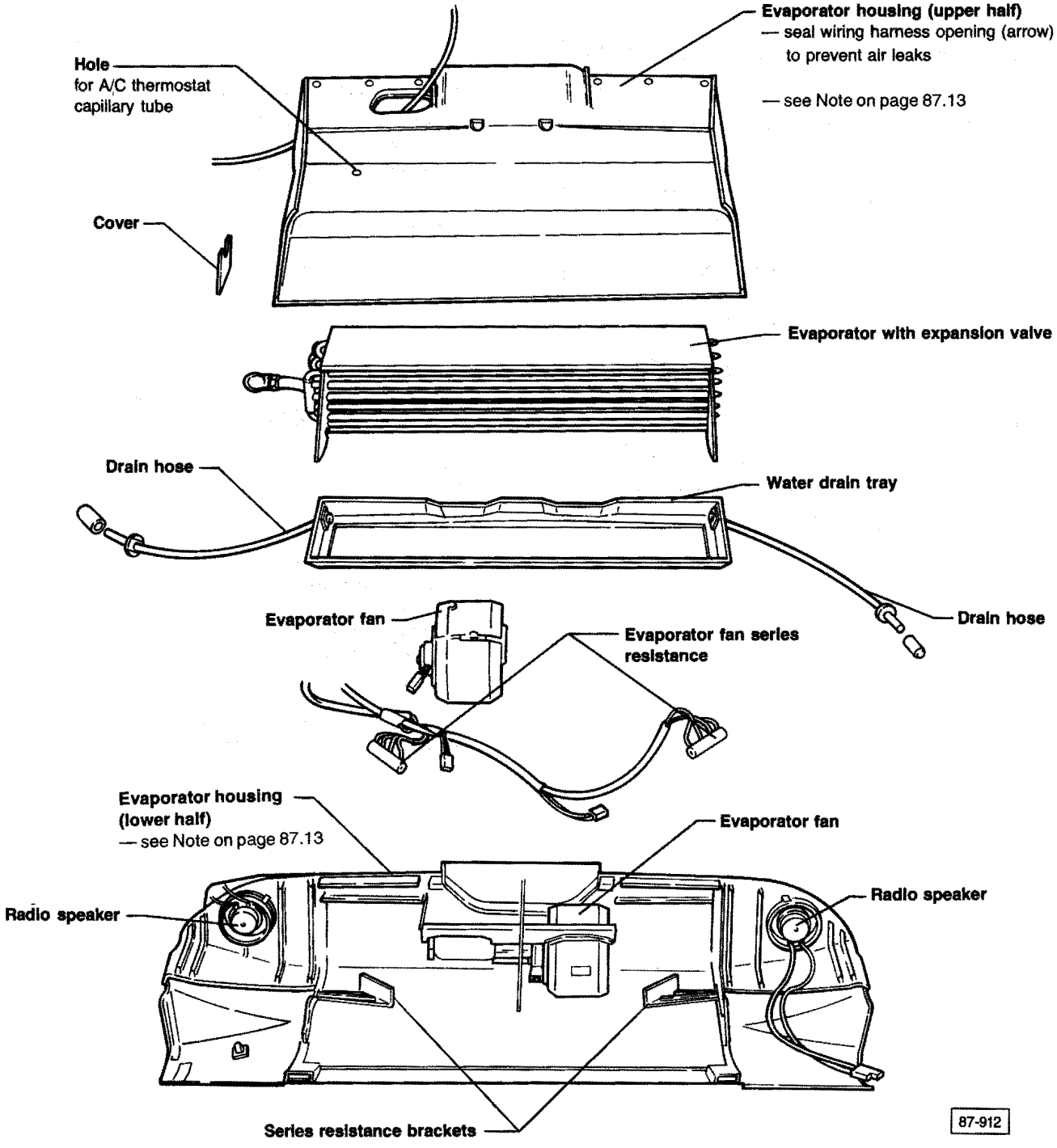

Air outlets, removing

Work sequence

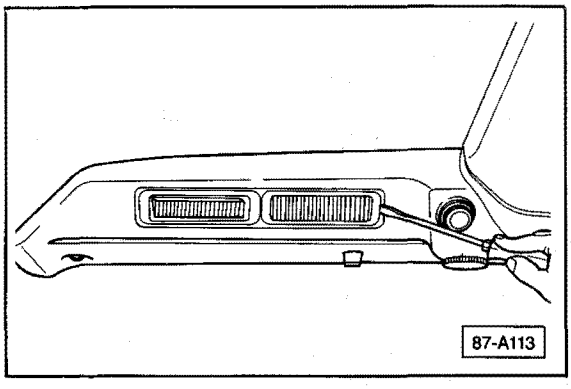

— push in retaining tab with screwdriver

— pry vent out

Evaporator housing - modified

Starting April 1988, a running change was made to the evaporator housing and intoduced into production. To prevent cracking, the body attachement points have been relocated.

See your Volkswagen Parts Department for the latest information regarding this upgrade. Also see Technical Bulletin Group 87, Number 89-01, dated August 31, 1989.

A/C evaporator or expansion valve, removing/installing

Work sequence

> **CAUTION**
>
> Before starting to work on any part of electrical system disconnect battery ground strap

— disconnect wiring to A/C compressor clutch at A/C compressor
— discharge A/C refrigerant system

Note

Plug all openings in system when removing/replacing parts. This prevents entry of dirt and moisture which may foul system.

Drops of moisture may cause expansion valve to ice up, blocking refrigerant flow and stopping cooling action

— remove sunvisors and retaining clips
— remove front housing and front air duct
— disconnect wiring harness to A/C switches

— remove center air duct
— remove rear air duct

— remove carpet in luggage area
— remove left rear trim panel
— remove right rear trim panel

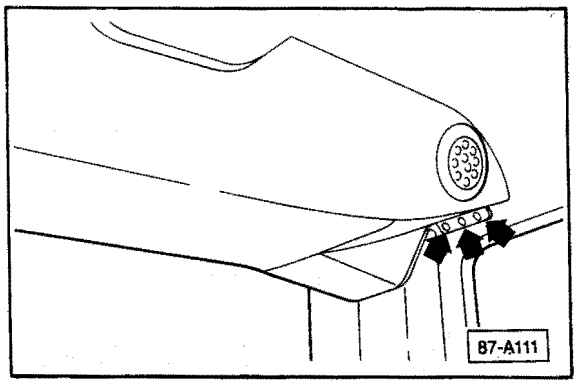

— support evaporator housing with universal lift crane
— remove left side evaporator housing attaching bolts (**arrows**)

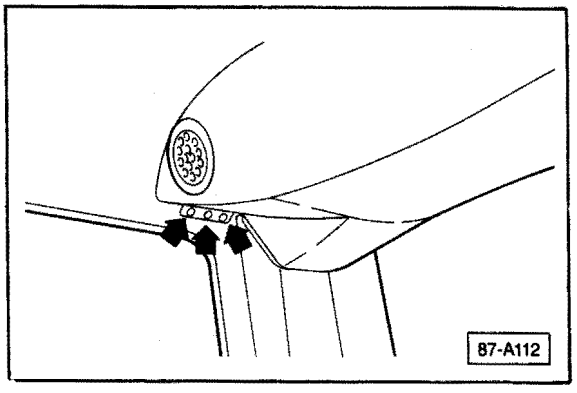

— remove right side evaporator housing attaching bolts (**arrows**)

— lower evaporator housing
— remove evaporator housing covers

— remove A/C refrigerant hoses from expansion valve
— remove evaporator from housing

— remove expansion valve from evaporator

Installing

— install in reverse sequence

> **CAUTION**
>
> Always replace O-rings when replacing A/C refrigerant components.
>
> Coat O-rings lightly with refrigerant oil before assembly

— re-charge A/C refrigerant system
— connect battery ground cable
— re-connect wiring at A/C compressor clutch

A/C adaptor valve VAG 1637, installing

Beginning with Vanagon production in May, 1988, the threaded connection on the A/C high pressure service valve has been changed from 7/16"-20 UNF to 3/8" — 24 UNF. Use special adaptor valve, **VAG 1637**, when making connections to the high pressure service valve.

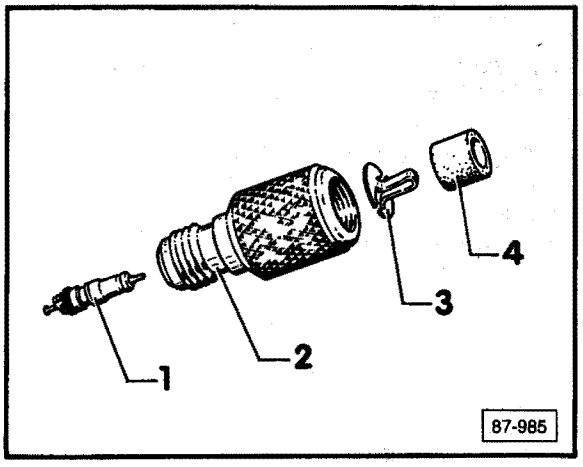

Adaptor valve VAG 1637
1 — Schrader valve
2 — Adaptor
3 — Valve opener
4 — Sealing gasket

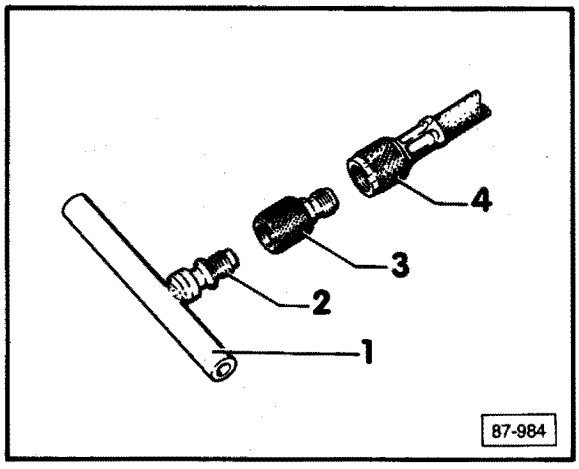

Installation position
1 — A/C high pressure line
2 — A/C high pressure service valve (3/8" — 24 UNF)
3 — Adaptor valve **VAG 1637**
4 — Service hose (to pressure gauge set)

— install adaptor valve **VAG 1637** onto A/C high pressure service valve
— install A/C service hose onto adaptor valve **VAG 1637**

A/C compressor (Sanden SD 510), replacing

The Sanden **SD 510** A/C compressor is no longer available as a spare part and has been superseded to the Sanden model **SD 709**. If A/C compressor replacement is necessary, install the **SD 709** in place of the **SD 510**.

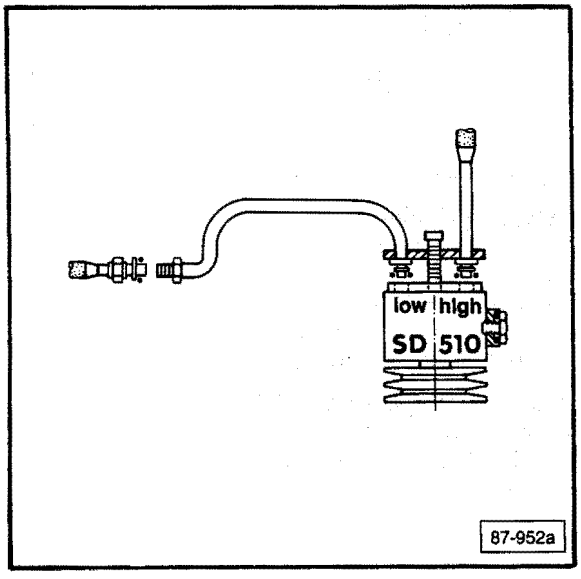

Fig. 1 A/C compressor SD 510 factory installation

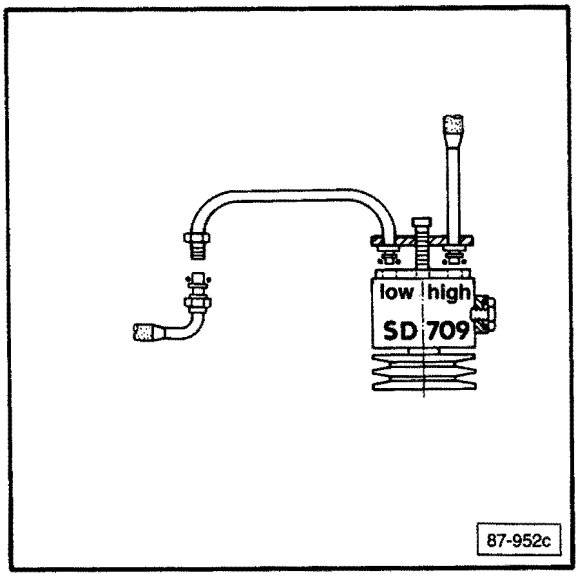

Fig. 2 A/C compressor SD 709 factory installation (from VIN HH 056 819)

Note

As of **VIN HH 056 819**, all Vanagon vehicles are equipped with the Sanden **SD 709** A/C compressor.

Use the following procedure when replacing the model **SD 510** with the model **SD 709**.

Parts required:

P/N 253 260 797 A	Compressor — **SD 709**
P/N 253 260 708 E	A/C refrigerant line
P/N 253 260 716 A	A/C refrigerant line
P/N 803 260 749 B	O-ring (two required)
P/N 431 260 749	O-ring (two required)

— discharge A/C system, page 87.8
— remove A/C compressor belt and remove A/C compressor
— remove low pressure A/C line leading from compressor to A/C hose and discard

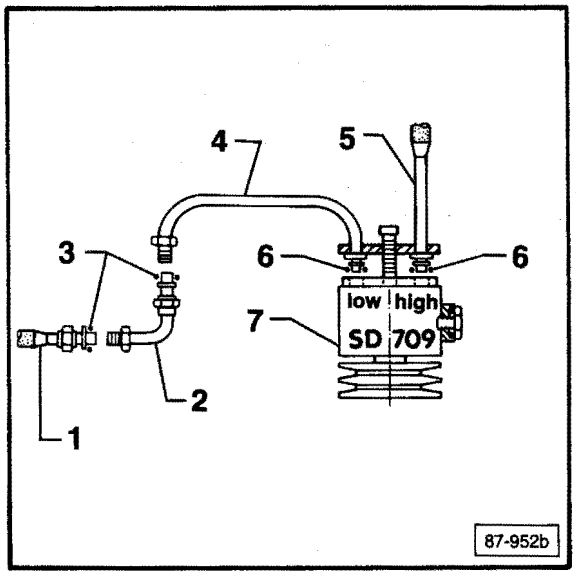

Fig. 3 A/C compressor SD 709 installation (conversion from SD 510)

— install A/C line **2**, **P/N 253 260 716 A** to A/C hose **1** using new O-ring **3**, **P/N 803 260 749 B**
— install A/C line **4**, **P/N 253 260 708 E** and O-ring **3**, **P/N 803 260 749 B** to A/C line **2**
— install new A/C compressor **7**, **P/N 253 260 797 A**
— connect A/C lines **4** and **5** to compressor using new O-rings **6**, **P/N 431 260 749**

— install A/C compressor belt and adjust
— evacuate A/C system and recharge
— check A/C system operation

CAUTION

Part numbers are for reference only. Always check with your Parts Department for latest parts information.

Electrical System– Instruments, Radio

Index

1980-1984
— Cigarette lighter
replacing 90.31
— Fuel gauge
checking 90.5, 90.9
troubleshooting 90.13
— Fuel gauge sender
removing/installing 90.11
— Instrument cluster
assembling/disassembling 90.2, 90.6
removing/installing 90.10
— Light emitting diodes (LED)
checking 90.5
identifying 90.4, 90.8
— Multi-point connector
identifying 90.4, 90.8
— Speedometer
calibration 90.30
— Speedometer cable
removing/installing 90.10
— Voltage stabilizer 90.4, 90.8

From 1985
— Cigarette lighter
replacing 90.31
— Coolant temperature gauge
locating 90.14
troubleshooting 90.21
— Dynamic oil pressure system
assembly 90.22
removing/installing 90.23
troubleshooting 90.24
— Fuel gauge
locating 90.14
troubleshooting 90.20
— Instrument cluster
assembling/disassembling 90.14
removing/installing 90.10
— Light emitting diodes (LED)
checking 90.19
identifying 90.18
— Multi-point connector
identifying 90.18
— Speedometer
calibration 90.30
— Speedometer cable
installing (from VIN 25 H 040 185)
except Syncro 90.17
removing/installing 90.17
— Voltage stabilizer
checking 90.18

From 1990
— Heidelberg VI fixed coded radio
coding a new or remanufactured radio 90.32
reactivating radio after reconnecting power 90.33
unlocking an electronically controlled radio 90.34

CAUTION

Before starting to work on any part of electrical system, disconnect battery ground strap

Note

To replace printed circuit LED's/bulb, first remove warning light housing

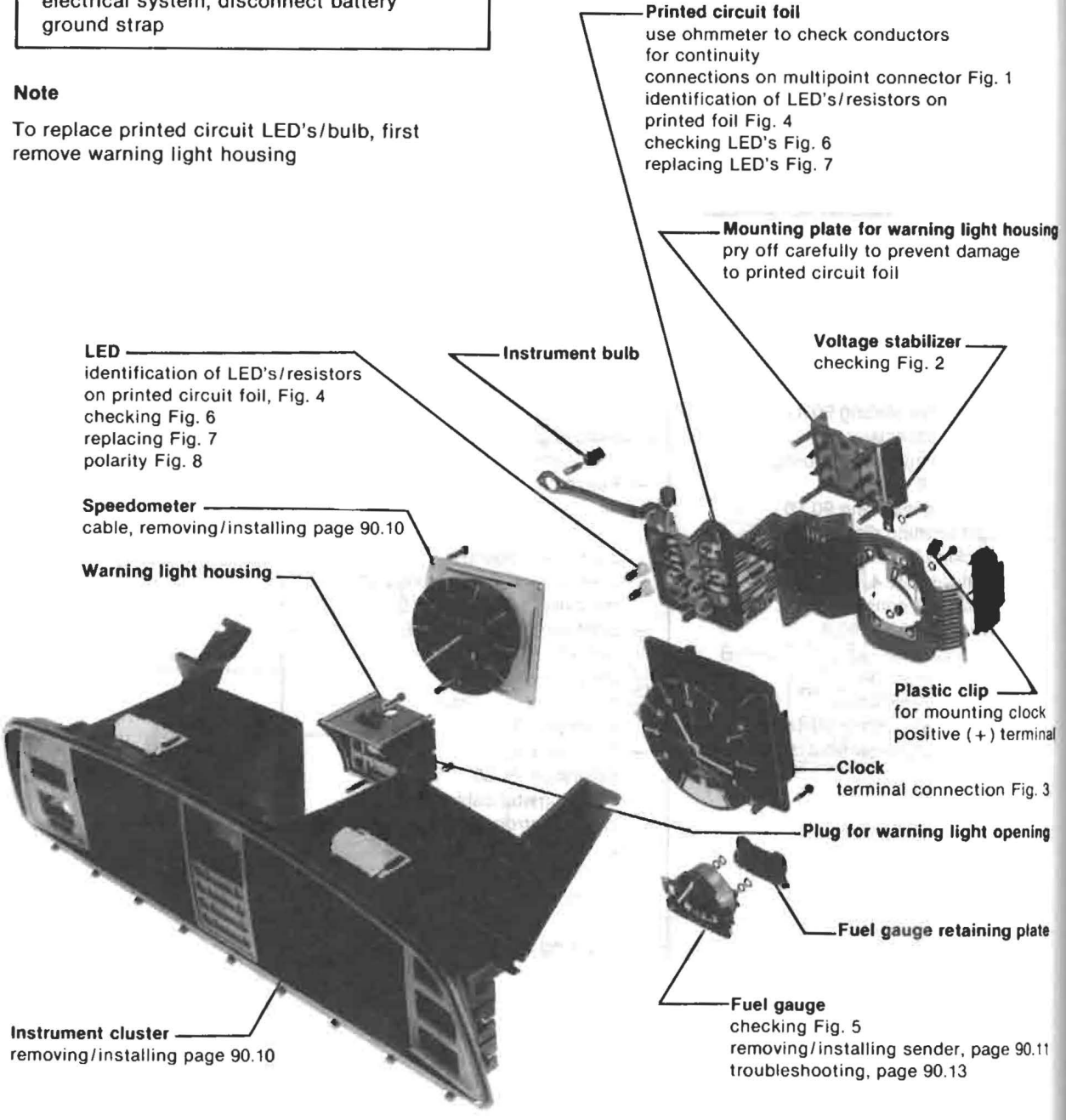

90-313

Note

To replace printed circuit LED's/bulb, first remove warning light housing

CAUTION

Before starting to work on any part of electrical system, disconnect battery ground strap

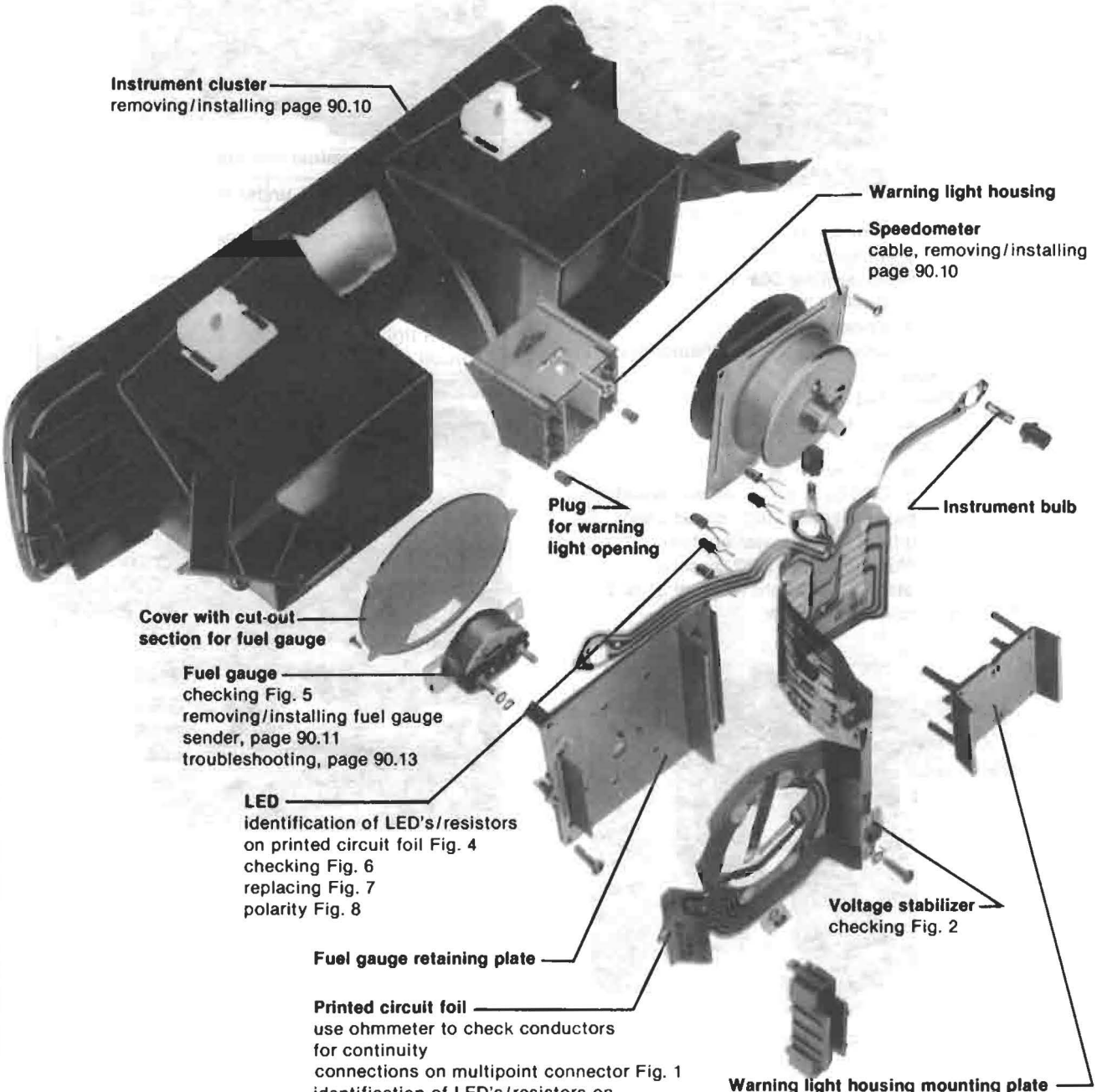

90-317

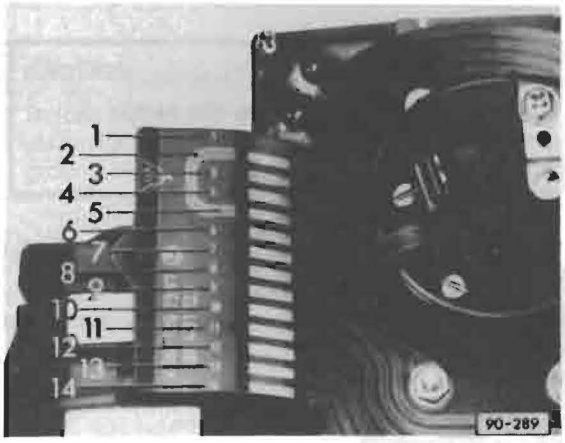

Fig. 1 Multi-point connector terminals

1 = vacant
2 = ground terminal 31
3 = instrument lights
4 = high beam terminal 56a
5 = ground terminal 31
6 = vacant (air-cooled)
coolant temperature gauge (water-cooled, diesel)
7 = clock (if not installed, vacant)
8 = fuel gauge sender
9 = positive terminal 15
10 = oil pressure switch
11 = EGR or OXS (air-cooled, water-cooled)
glow plug indicator (1983 diesel only)
12 = vacant (air-cooled, water-cooled)
glow plug indicator (1982 diesel only)
13 = alternator warning light terminal 61 or D+
14 = indicator terminal 49a

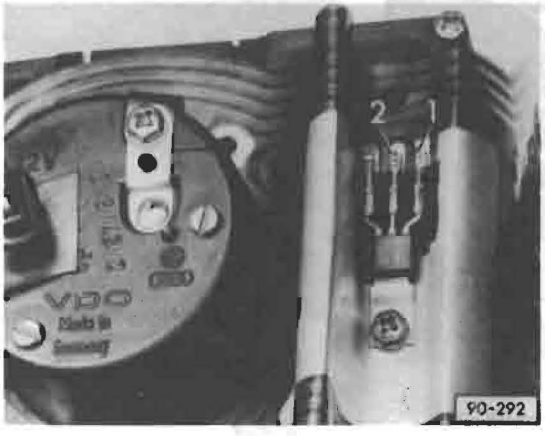

Fig. 2 Voltage stabilizer, checking

— connect voltmeter between positive connection **1** and ground **2**
— turn ignition switch **ON**
- voltage should be approximately 10V
- if voltage is above 10.5V or below 9.5V, voltage stabilizer is defective and must be replaced

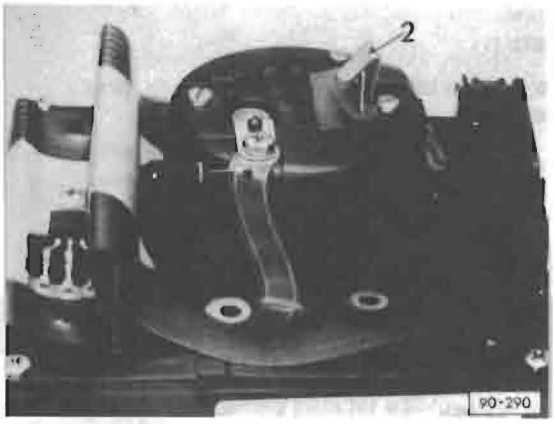

Fig. 3 Clock terminal connections

— place foil **1** under ground terminal of clock

CAUTION

When tightening terminal, do not twist circuit foil or damage to foil may result

— secure terminal **2** with plastic clip

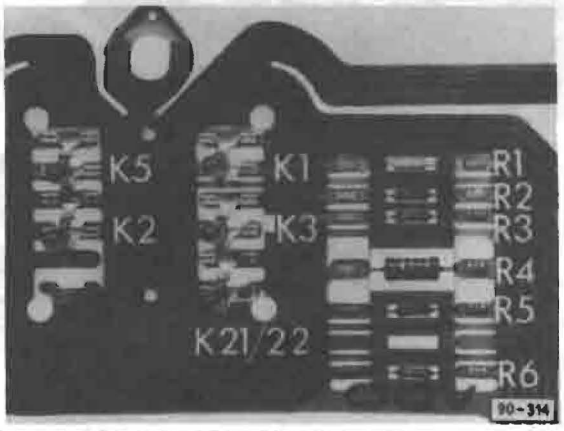

Fig. 4 Identification of LED's/resistors on printed circuit foil

K1 = LED (red) high beam
K2 = LED (red) alternator
K3 = LED (red) oil pressure
K5 = LED (green) turn indicator
K21/22 = LED (red) EGR or OXS
R1 = Resistor for **K1** (470Ω)
R2 = Resistor for **K3** (470Ω)
R3 = Resistor for **K21/22** (470Ω)
R4 = Resistor for voltage stabilizer (150Ω)
R5 = Resistor for **K2** (470Ω)
R6 = Resistor for **K5** (470Ω)

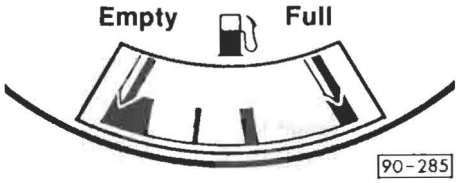

Fig. 5 Fuel gauge, checking

— set tester VW 1301 to following test values:

Tester dial setting	Fuel gauge reading*
55	full
560	empty

*deviation of one needle width to left or right is **OK**

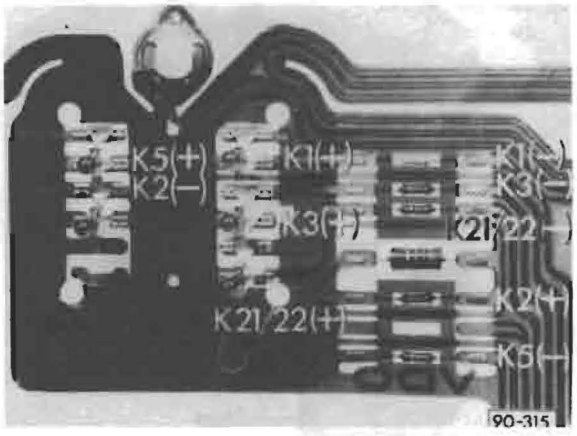

Fig. 6 LED's, checking

— connect battery positive lead to LED **K1** (+)
— connect negative battery lead to LED **K1** (–).
— repeat this test step consecutively on remaining LED's
• LEDS must light

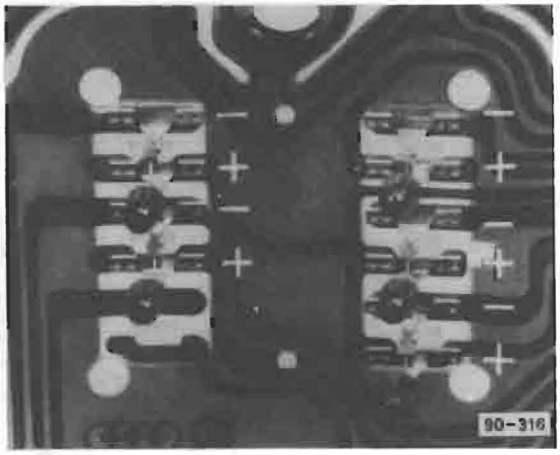

Fig. 7 LED's, replacing

— note polarity of LED's (see Fig. 8) when plugging into printed circuit

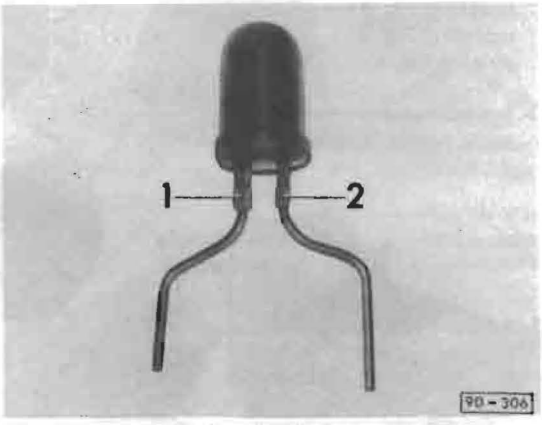

Fig. 8 LED polarity, checking

1 = negative terminal
2 = positive terminal

• negative terminal is slightly wider

CAUTION

Before starting to work on any part of electrical system, disconnect battery ground strap

Note

To replace printed circuit LED's/bulb, first remove warning light housing

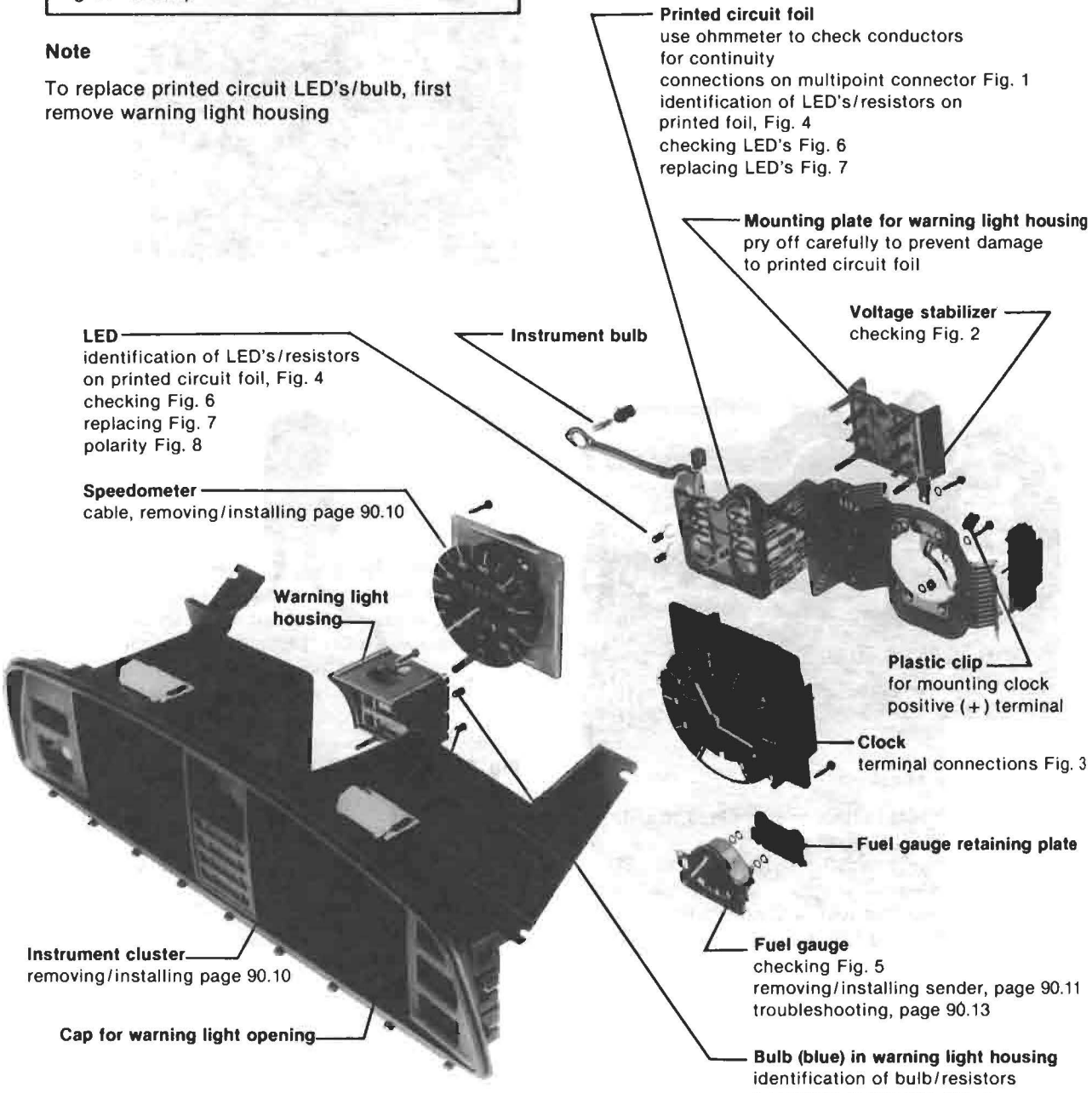

90-286

Note

To replace printed circuit LED's/bulb, first remove warning light housing

CAUTION

Before starting to work on any part of electrical system, disconnect battery ground strap

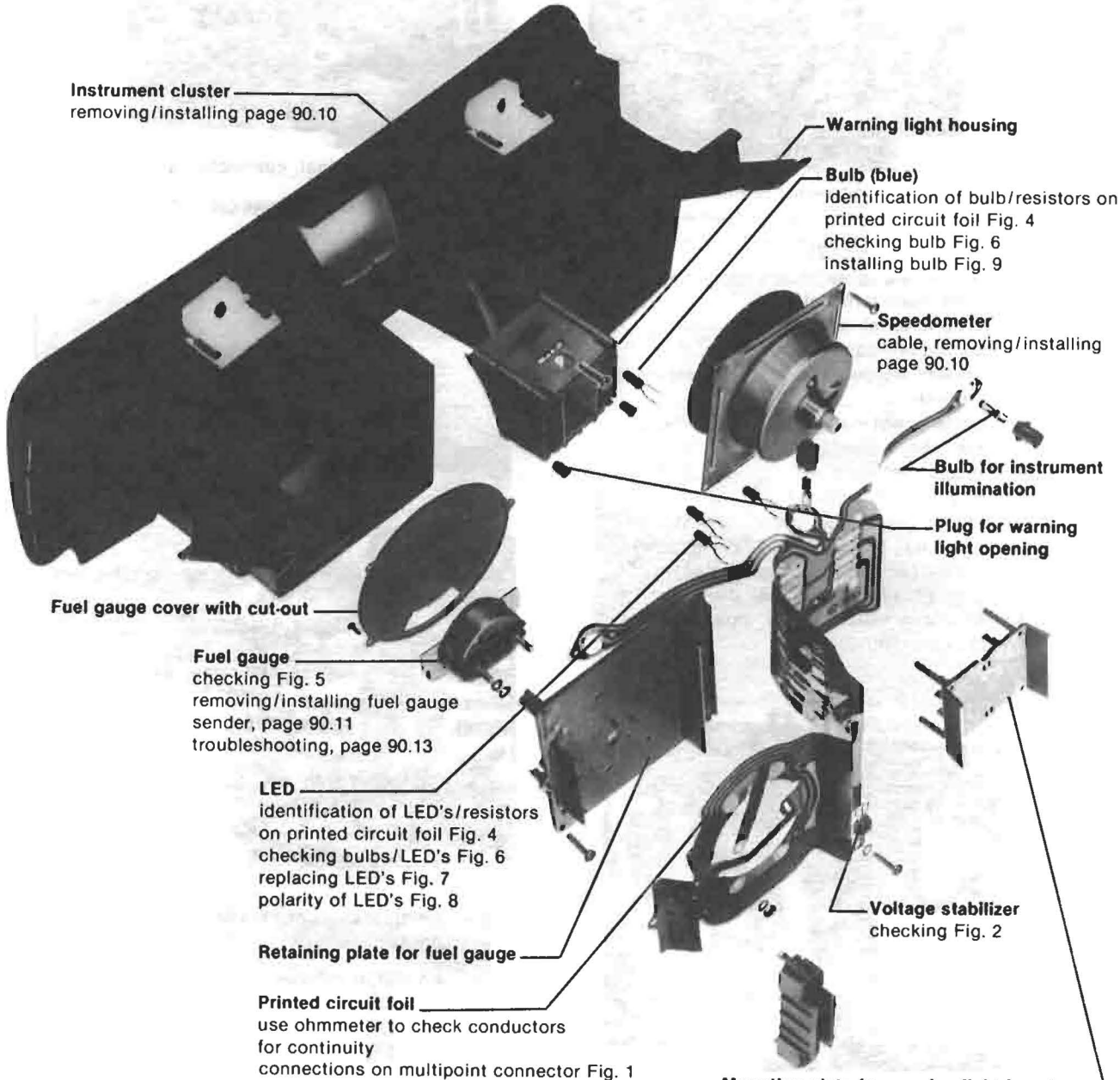

Instrument cluster
removing/installing page 90.10

Warning light housing

Bulb (blue)
identification of bulb/resistors on printed circuit foil Fig. 4
checking bulb Fig. 6
installing bulb Fig. 9

Speedometer
cable, removing/installing page 90.10

Bulb for instrument illumination

Plug for warning light opening

Fuel gauge cover with cut-out

Fuel gauge
checking Fig. 5
removing/installing fuel gauge sender, page 90.11
troubleshooting, page 90.13

LED
identification of LED's/resistors on printed circuit foil Fig. 4
checking bulbs/LED's Fig. 6
replacing LED's Fig. 7
polarity of LED's Fig. 8

Voltage stabilizer
checking Fig. 2

Retaining plate for fuel gauge

Printed circuit foil
use ohmmeter to check conductors for continuity
connections on multipoint connector Fig. 1
identification of LED's/resistors on printed foil, Fig. 4
checking bulb/LED's Fig. 6
replacing LED's Fig. 7

Mounting plate for warning light housing
pry off carefully to prevent damage to printed circuit foil

90-284

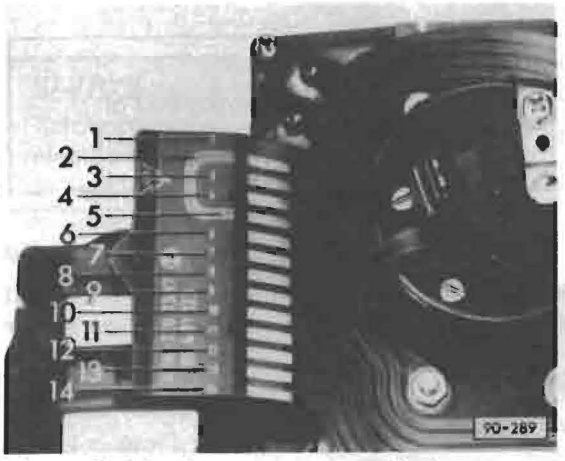

Fig. 1 Multi-point connector terminals

1 = vacant
2 = ground terminal 31
3 = instrument lights
4 = high beam terminal 56a
5 = ground terminal 31
6 = vacant (air-cooled)
coolant temperature gauge (water-cooled, diesel)
7 = clock (if not installed, vacant)
8 = fuel gauge sender
9 = positive terminal 15
10 = oil pressure switch
11 = vacant (air-cooled, water-cooled)
glow plug indicator (1983 diesel only)
12 = vacant (air-cooled, water-cooled)
glow plug indicator (1982 diesel only)
13 = alternator warning light terminal 61 or D+
14 = indicator terminal 49a

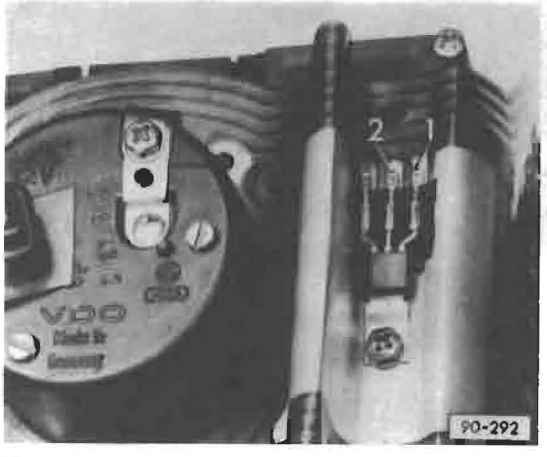

Fig. 2 Voltage stabilizer, checking

— connect voltmeter between positive connection **1** and ground **2**
- voltage should be approximately 10V
- if voltage is above 10.5V or below 9.5V, voltage stabilizer is defective and must be replaced

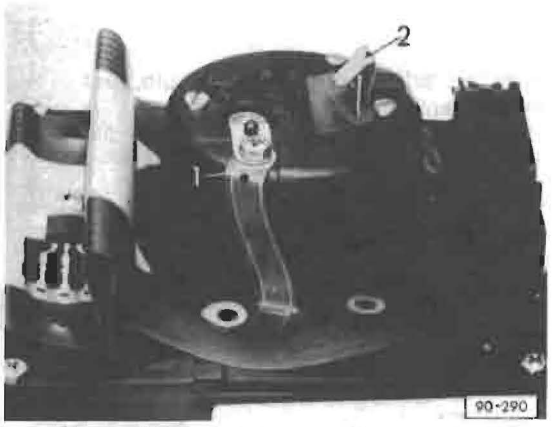

Fig. 3 Clock terminal, connections

— place foil **1** under ground terminal of clock

CAUTION

When tightening terminal, do not twist circuit foil or damage to foil may result

— secure terminal **2** with plastic clip

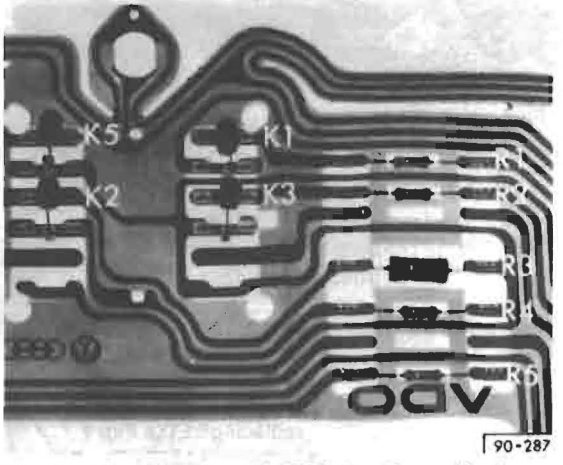

Fig. 4 Identification of LED's/resistors/bulb on printed circuit foil

K1 = bulb (blue) high beam
K2 = LED (red) alternator
K3 = LED (red) oil pressure
K5 = LED (green) turn indicator
R1 = Series resistor for K1 (270Ω)
R2 = Series resistor for K3 (470Ω)
R3 = Series resistor for alternator pre-exciter circuit (150Ω)
R4 = Series resistor for K2 (470Ω)
R5 = Series resistor for K5 (470Ω)

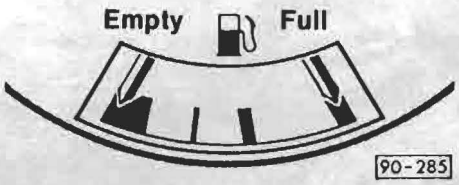

Fig. 5 Fuel gauge, checking

— set tester VW 1301 to following test values:

Tester dial setting	Fuel gauge reading*
55	full
560	empty

*deviation of one needle width to left or right is **OK**

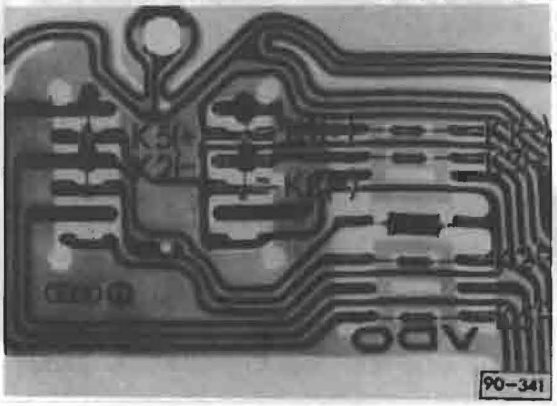

Fig. 6 Bulb/LED's, checking

— connect battery positive lead to LED **K1 (+)**
— connect negative battery lead to LED **K1 (−)**
— repeat this test step consecutively on remaining LED's
• warning lights must light

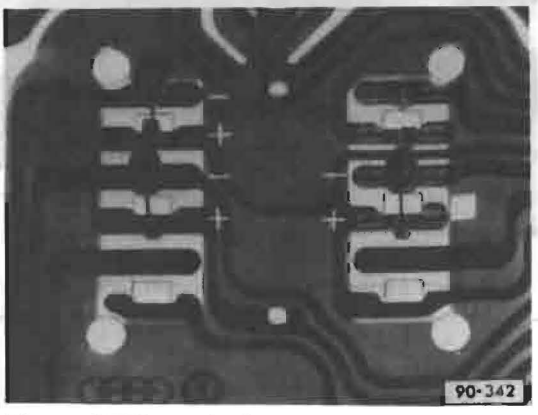

Fig. 7 LED's, replacing

— note polarity of LED's (see Fig. 8) when plugging into printed circuit

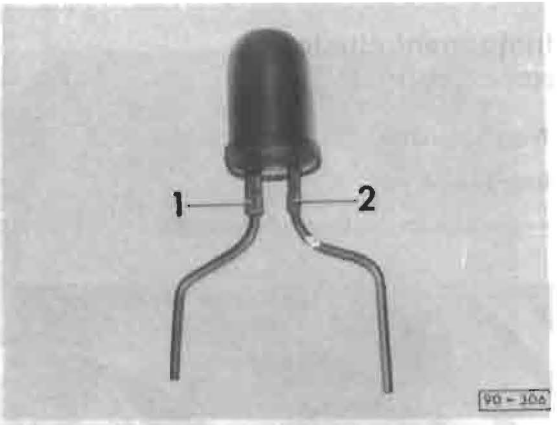

Fig. 8 LED polarity, checking

1 = negative terminal
2 = positive terminal

• negative terminal is slightly wider



Fig. 9 Bulb in warning light housing, installing

— press blue bulb through slot into guide with screwdriver
• bulb must be heard to engage (LED's slide freely into guide)

Instrument cluster, removing/installing

Work sequence

Removing

— disconnect battery ground strap



— put fingers into recesses (arrows) and pull up cluster cover



— pull hazard warning switch forward
— pull dual circuit brake/parking brake warning light housing forward (driving direction)
— remove screws (arrow) and instrument cluster

Installing

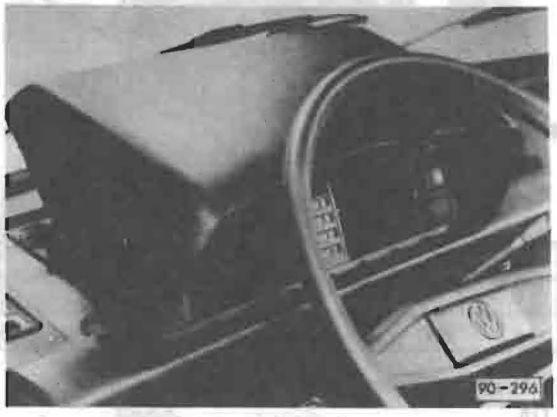

— insert cover into retaining lugs
— press frame down and tilt cover forward to engage

Speedometer cable, removing/installing

Work sequence

Removing

— disconnect battery ground strap
— disconnect speedometer cable
— remove spare tire

USA only

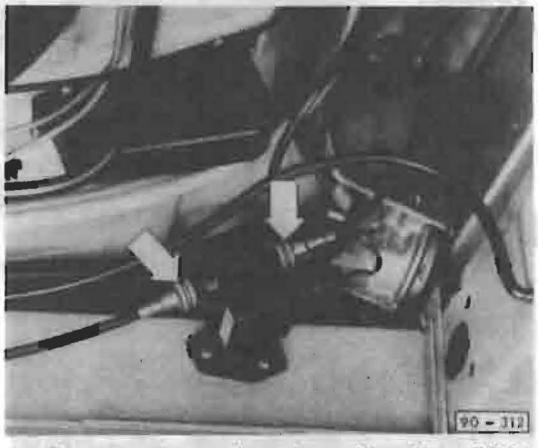

— disconnect speedometer cables from EGR/ oxygen sensor mileage counter (arrows)



— remove nut from bracket (arrow)

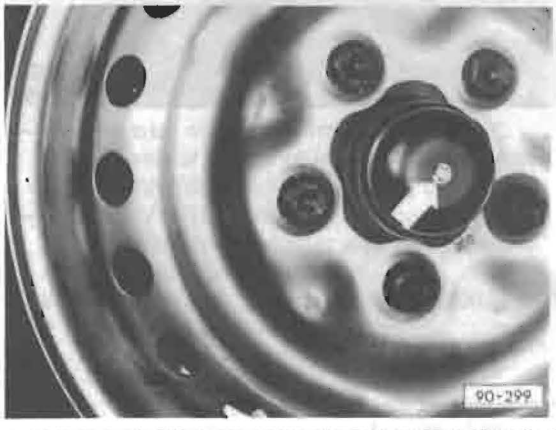

— remove circlip from speedometer cable (arrow)

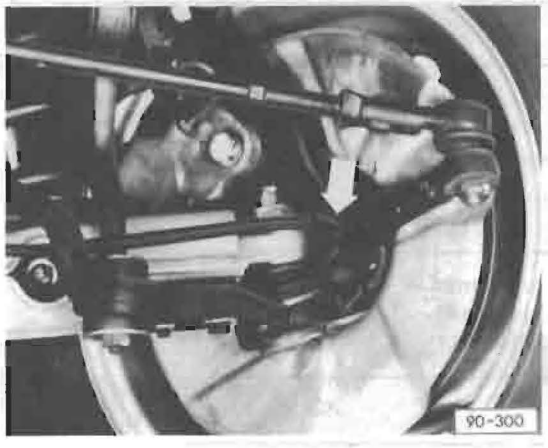

— remove speedometer cable from rubber sleeve in steering knuckle (arrow)

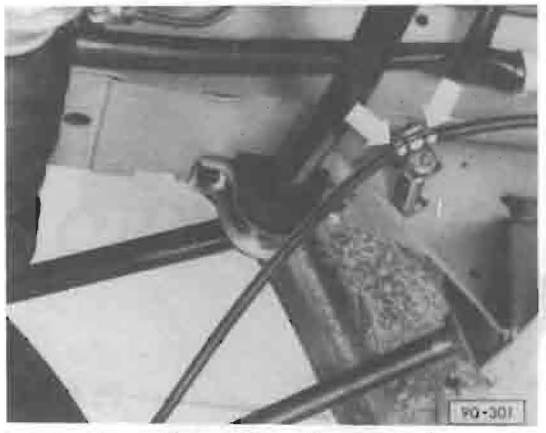

— when installing cable, align marks (arrows) on cable
— after installing circlip on speedometer cable end, seal with silicone seal

CAUTION

To avoid premature cable failure, position cable so it is free of strain or sharp bends. Do not grease connection to speedometer; this could cause needle to stick

Fuel gauge sender, removing/installing

Work sequence

Removing

— disconnect battery ground strap
— remove fuel tank (see Repair Group 20)

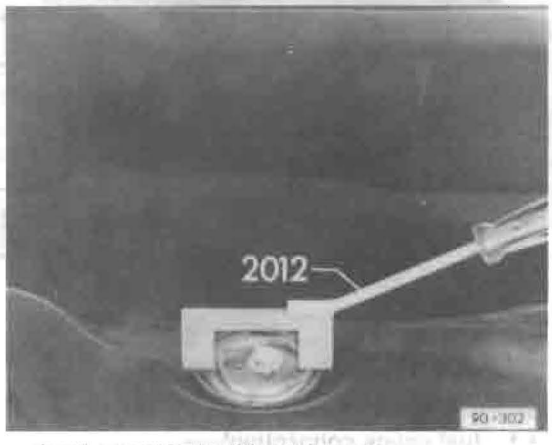

— mark position before removing
— remove sender by turning it counter-clockwise
— go to next page

Installing

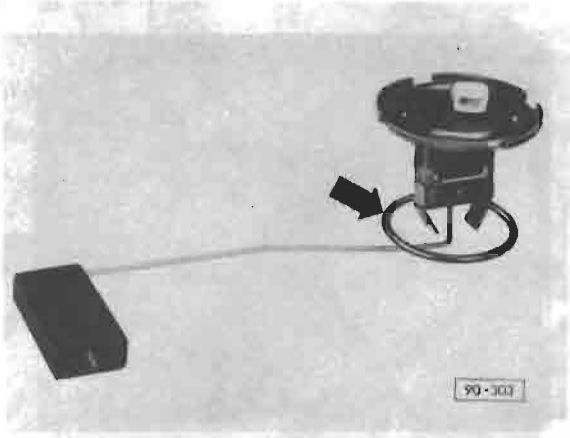

— coat sealing ring (arrow) with graphite

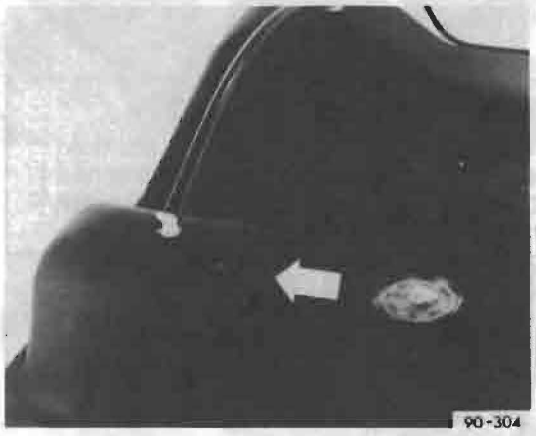

— install sender unit so float is facing driving direction (arrow)
— turn sender unit clockwise to stop



— attach positive and negative wires as shown
- 1 = fuel gauge connection
- 2 = ground connection

Fuel gauge, troubleshooting

Work sequence



— remove wire connector from fuel gauge sender unit at single plug connection (arrow), or possibly from multi-point plug connection
— connect VW 1301 to ground connection behind instrument cluster and to wire removed from fuel gauge
— start engine and check values (page 90.9)
• following results may be shown:

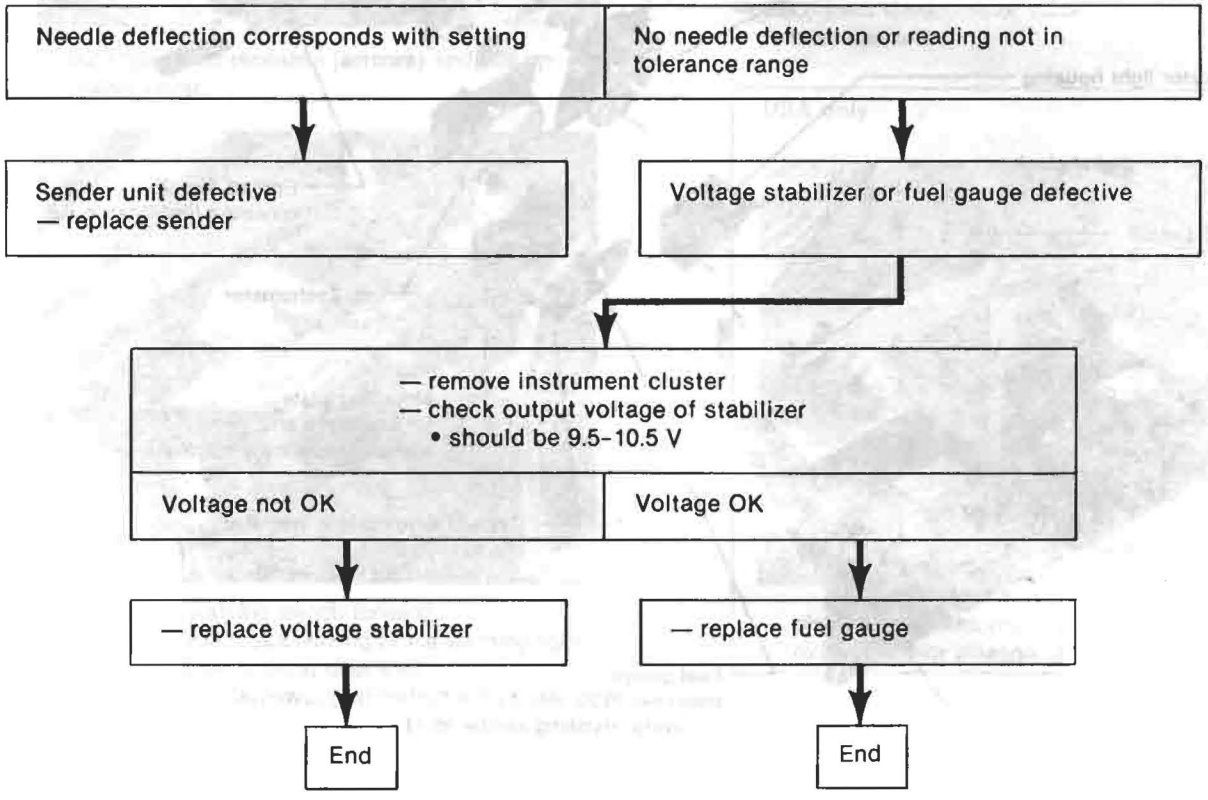

Instrument cluster, with tachometer

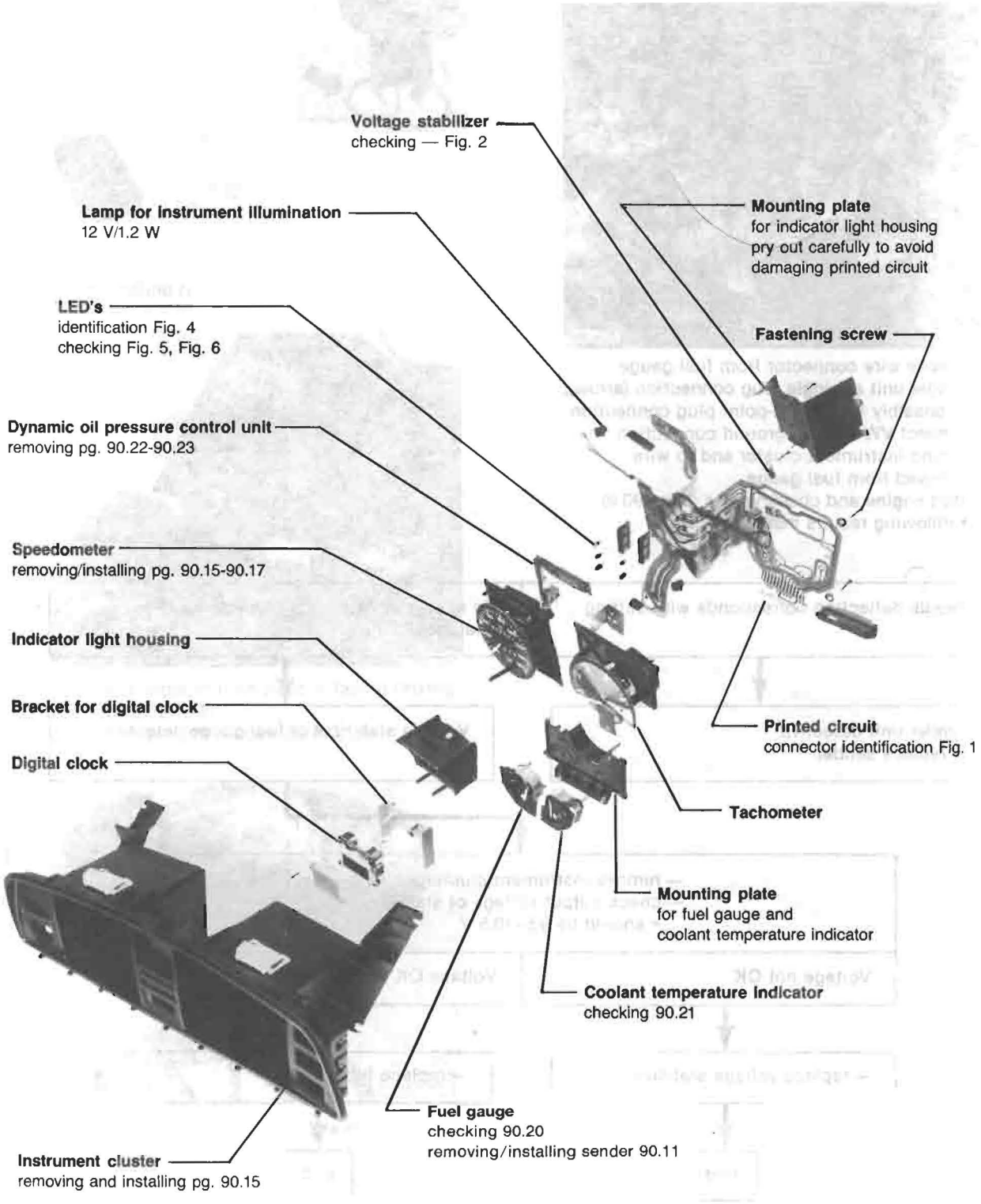

Instrument cluster, removing/installing

CAUTION

Before starting to work on any part of the electrical system, disconnect battery ground strap

Work sequence

Removing

— disconnect battery ground strap



— put fingers into recesses (**arrows**) and pull up cluster cover



— pull hazard warning switch forward
— pull dual circuit brake/parking brake warning light housing forward (driving direction)
— remove screws (**arrows**) and instrument cluster

Installing



— insert cover into retaining lugs
— press frame down and tilt cover forward to engage

Speedometer cable, removing/installing

Work sequence

Removing

— disconnect battery ground strap
— disconnect speedometer cable
— remove spare tire

USA only



— disconnect speedometer cables from EGR/ oxygen sensor mileage counter (**arrows**)

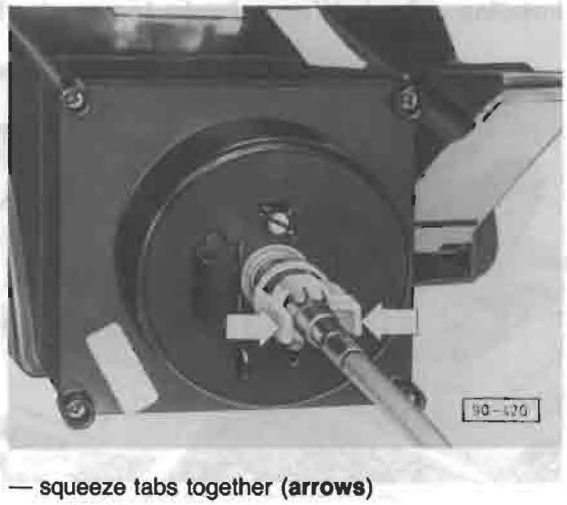

— squeeze tabs together (**arrows**)
— pull cable from speedometer



— remove nut from bracket (**arrow**)

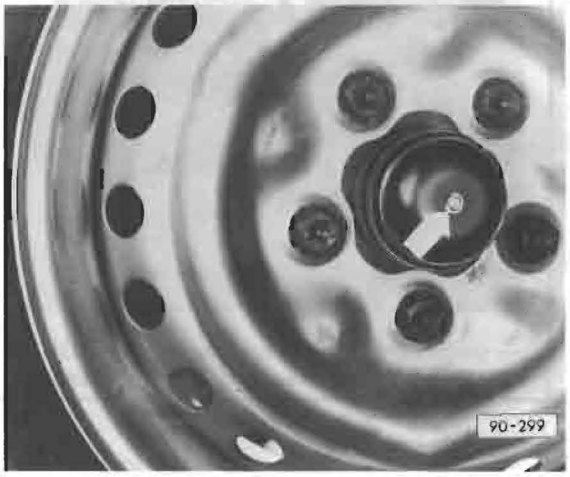

— remove circlip from speedometer cable (**arrow**)

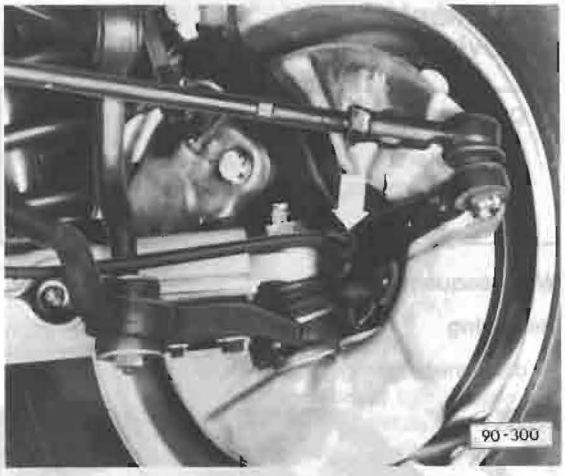

— remove speedometer cable from rubber sleeve in steering knuckle (**arrow**)

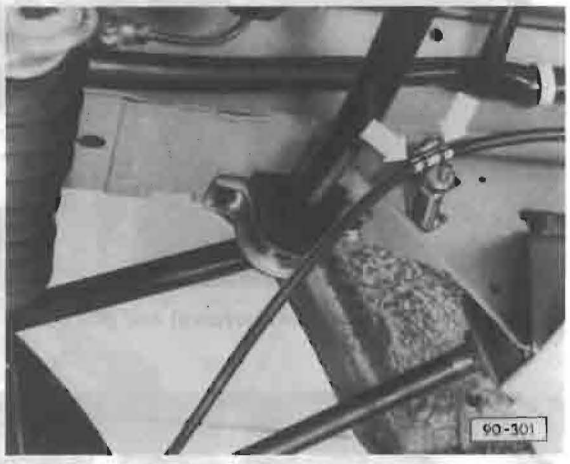

— when installing cable, align marks (**arrows**) on cable
— after installing circlip on speedometer cable end, seal with silicone seal

CAUTION

To avoid premature cable failure, position cable so it is free of strain or sharp bends. Do not grease connection to speedometer; this could cause needle to stick.

more

CAUTION

When replacing the drive cable, the rubber sleeve in the steering knuckle must be replaced.

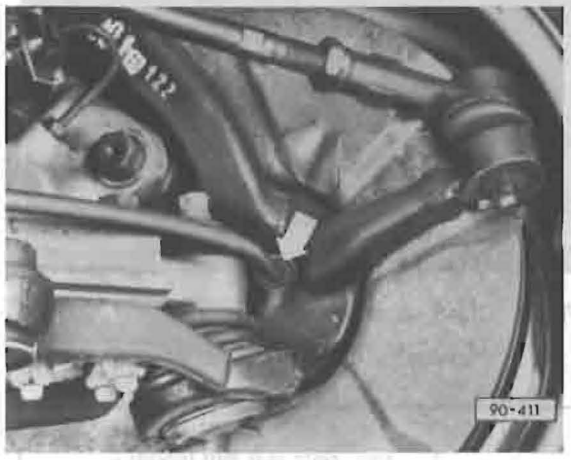

— push rubber sleeve to stop (**arrow**) with socket wrench
- sleeve must be flush with steering knuckle

— push cable through rubber sleeve and through dust cap

— fasten circlip on speedometer and seal with sealing material

Speedometer, removing

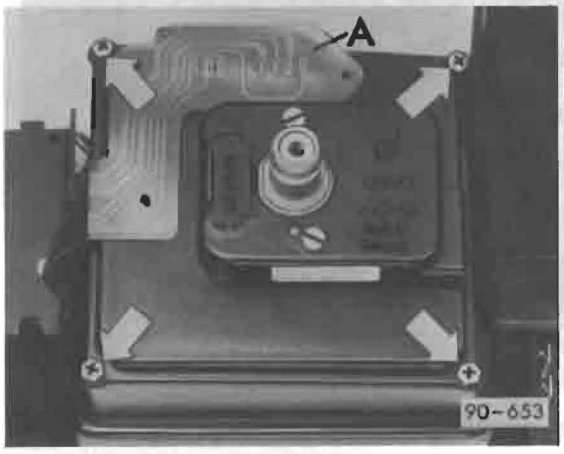

— remove instrument cluster
— remove printed circuit for dynamic oil pressure system (**A**)

— remove screws (**arrows**)
— remove speedometer

Speedometer cable, installing (from VIN: 25H H 040 185 — except Syncro)

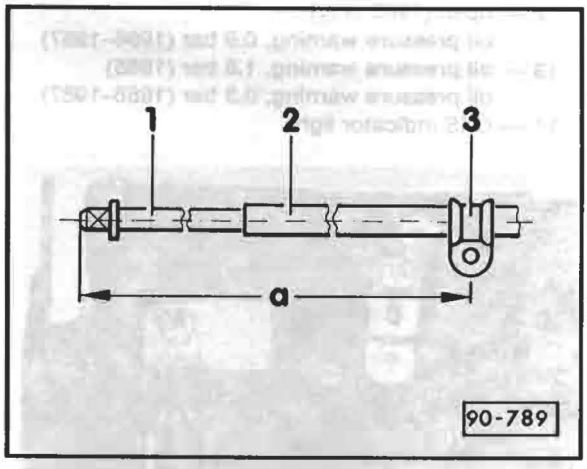

A new speedometer cable has been installed in vehicles from **VIN: 25H H 040 185**. Cable housing **2** has been lengthened and the installation mark found on previous cables has been deleted.

— measure distance **a** from end of cable **1** and mark cable housing **2**
- **a** = 740 mm (29.1 in.)

— install cable clamp **3** on cable housing and center over mark
— install speedometer cable and tighten cable clamp

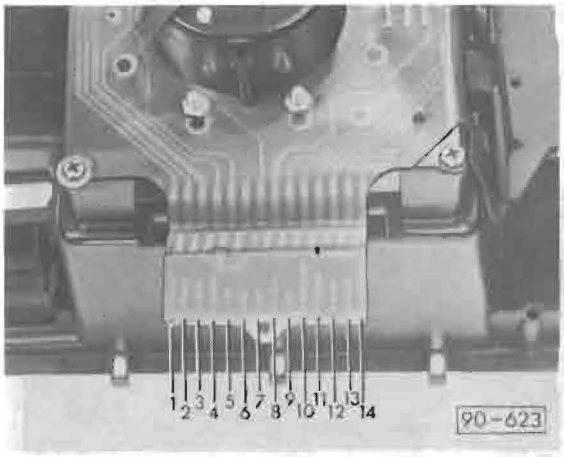

Fig. 1 Wiring of 14 pin connector

1 — instrument illumination
2 — high beam warning — terminal 56a
3 — ground, terminal 31
4 — open
5 — clock
6 — coolant temperature display — to sensor
7 — fuel gauge — to sender
8 — plus, terminal 15
9 — tachometer, terminal 1/W
10 — blinker warning, terminal 49a
11 — alternator warning, terminal 61
12 — open (1985 only)
oil pressure warning, 0.9 bar (1986–1987)
13 — oil pressure warning, 1.8 bar (1985)
oil pressure warning, 0.3 bar (1986–1987)
14 — OXS indicator light

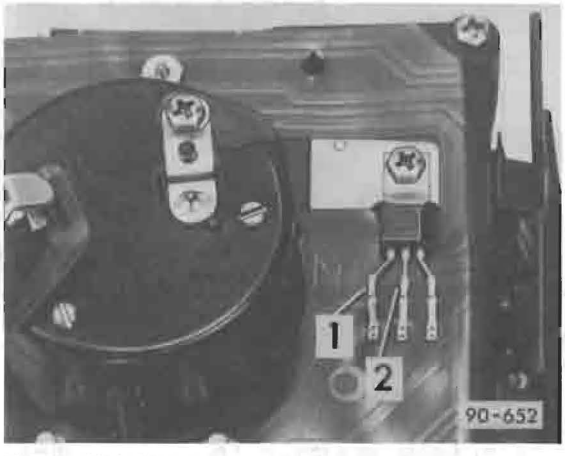

Fig. 2 Voltage stabilizer, checking

— connect voltmeter between positive connection **1** and ground **2**
- voltage should be approximately 10V
- if voltage is above 10.5V or below 9.5V, voltage stabilizer is defective and must be replaced

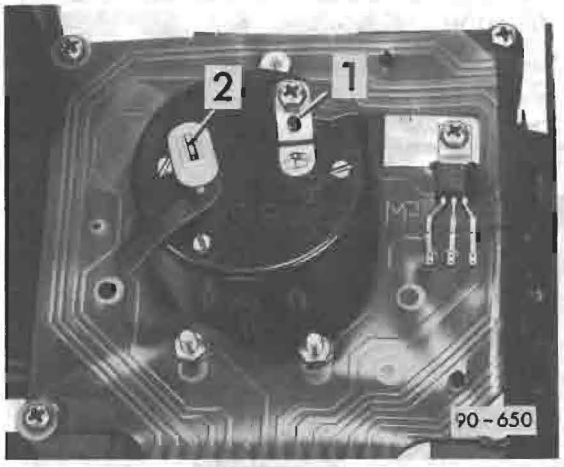

Fig. 3 Clock terminal, connections

— place foil **1** under ground terminal of clock

CAUTION

When tightening terminal, do not twist circuit foil or damage to foil may result

— secure terminal **2** with plastic clip

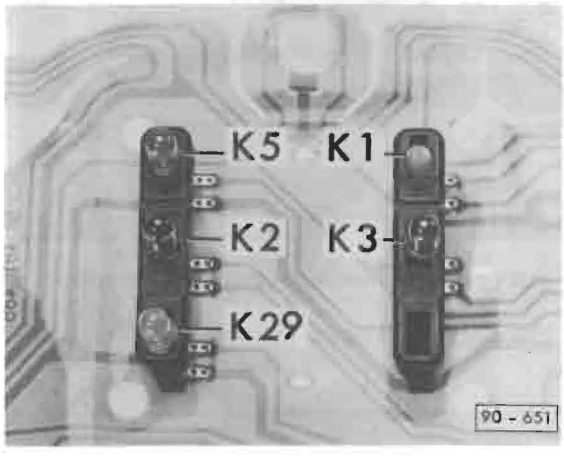

Fig. 4 Identification of LED's/resistors/bulb on printed circuit foil

K1 = bulb (blue) high beam
K2 = LED (red) alternator
K3 = LED (red) oil pressure
K5 = LED (green) turn indicator
K29 = LED (yellow) glow plugs

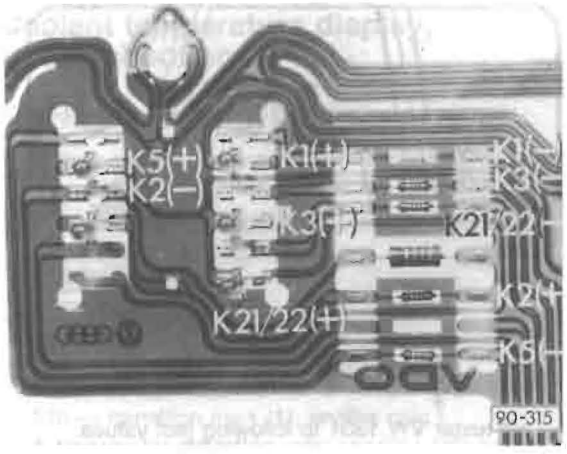

Fig. 5 LED's, checking

— connect battery positive lead to LED **K1** (+)
— connect negative battery lead to LED **K1** (−).
— repeat this test step consecutively on remaining LED's
• LED's must light

CAUTION

When replacing LED's do not reverse polarity

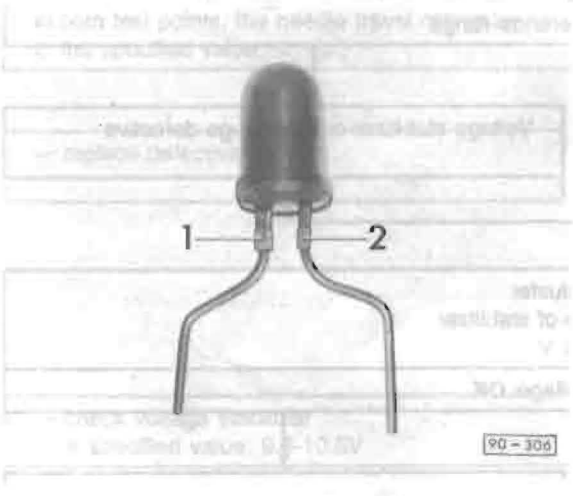

Fig. 6 LED polarity, checking

1 = negative terminal
2 = positive terminal

• negative terminal is slightly wider

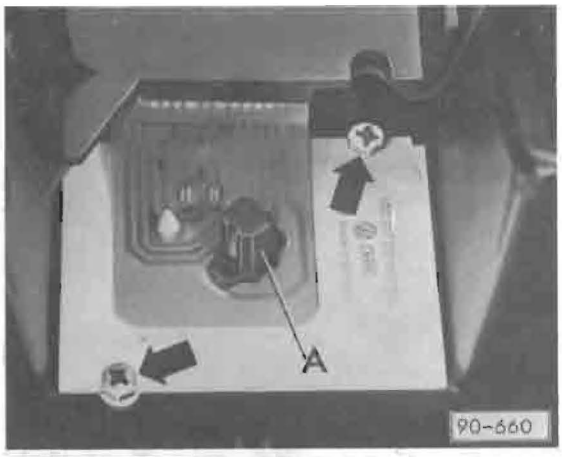

Fig. 7 Digital clock (LED quartz clock), replacing

— remove mounting screws (**arrows**)
— remove clock light (**A**)
— remove connector
— remove digital clock

Fuel gauge, troubleshooting

Work sequence

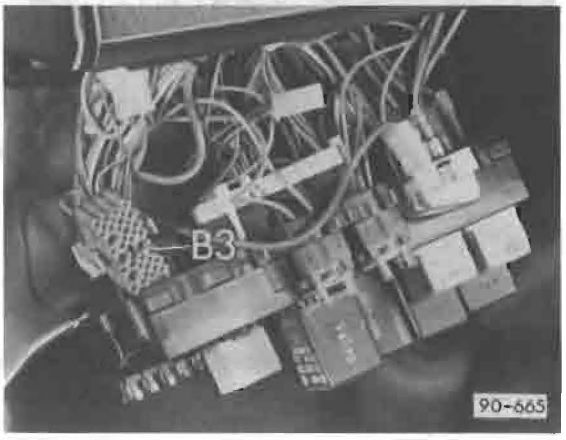

— remove multi-point connector (**B**) (**RED**)
— connect tester VW 1301 on ground star behind the instrument panel and on multi-point connector terminal **B3**
— start engine
— check specified values with VW 1301

Full: 50 Empty: 320

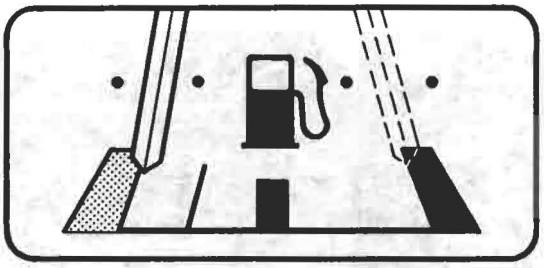

Fuel gauge, checking

— set tester VW 1301 to following test values:

Test dial setting	Fuel gauge reading*
50	full
320	empty

*deviation of one needle width to left or right is **OK**

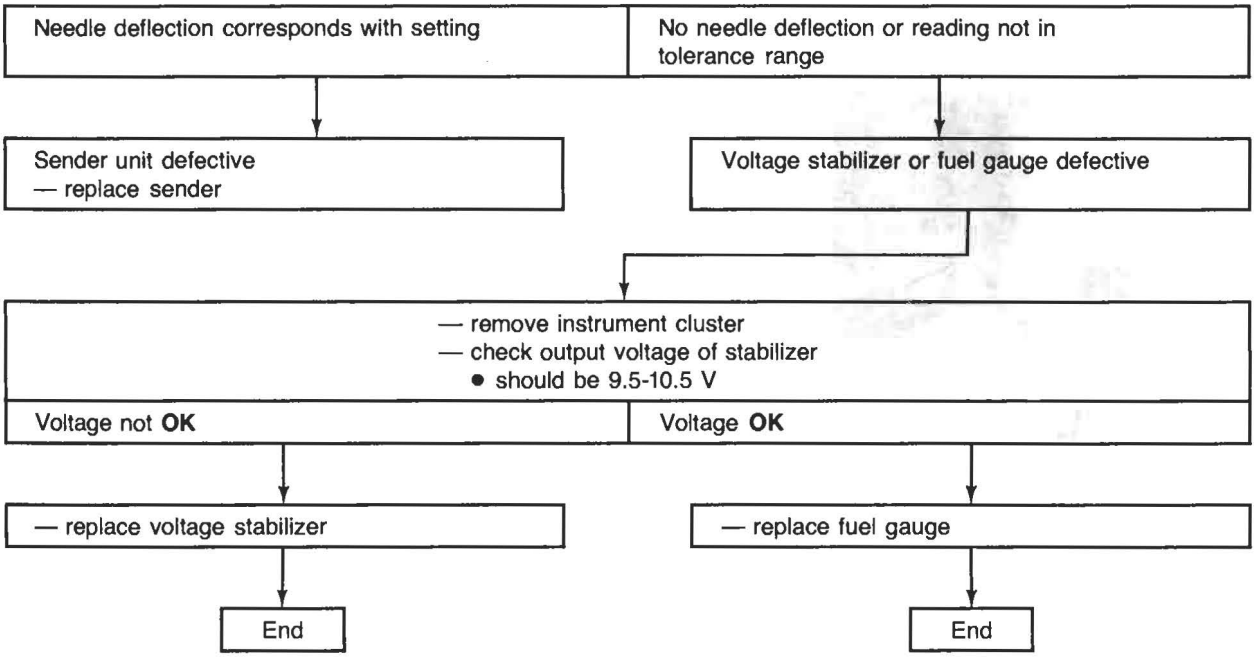

Coolant temperature display, troubleshooting

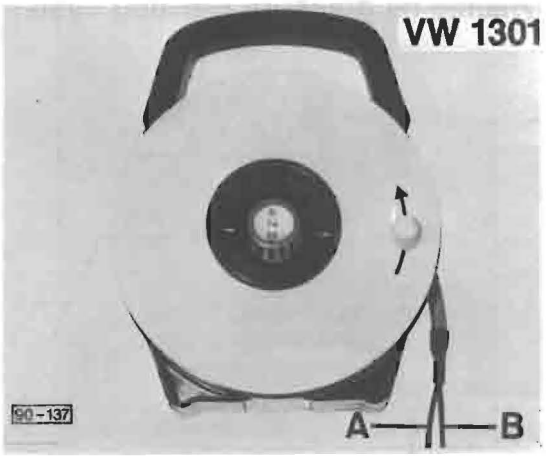

Test requirement: Battery **OK**

— remove wire on coolant temperature sensor
— connect tester VW 1301
A — to coolant temperature display
B — to ground
— switch ignition **ON**

— set VW 1301 to the following values:

50 — warning range (**11**), engine too hot
red LED flashes
510 — transition area (**1**), engine cold
- permissible deviation, one needle width right or left.

The following results may be obtained:

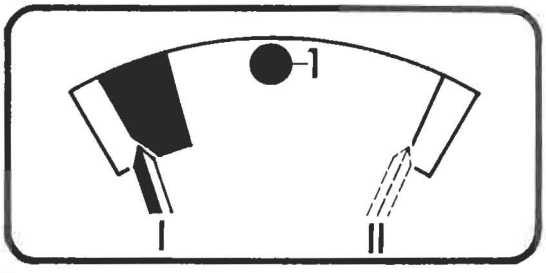

90-318

In both test points, the needle travel corresponds to the specified value

— replace defective sensor

No needle travel or display not in tolerance range

voltage stabilizer or display instrument defective

— remove instrument cluster and check voltage at stabilizer outlet

— check voltage stabilizer
- specified value: 9.5-10.5V

no voltage
or under 9.5 V

— replace voltage stabilizer

voltage
9.5-10.5 V

— replace defective temperature gauge

Dynamic oil pressure warning system

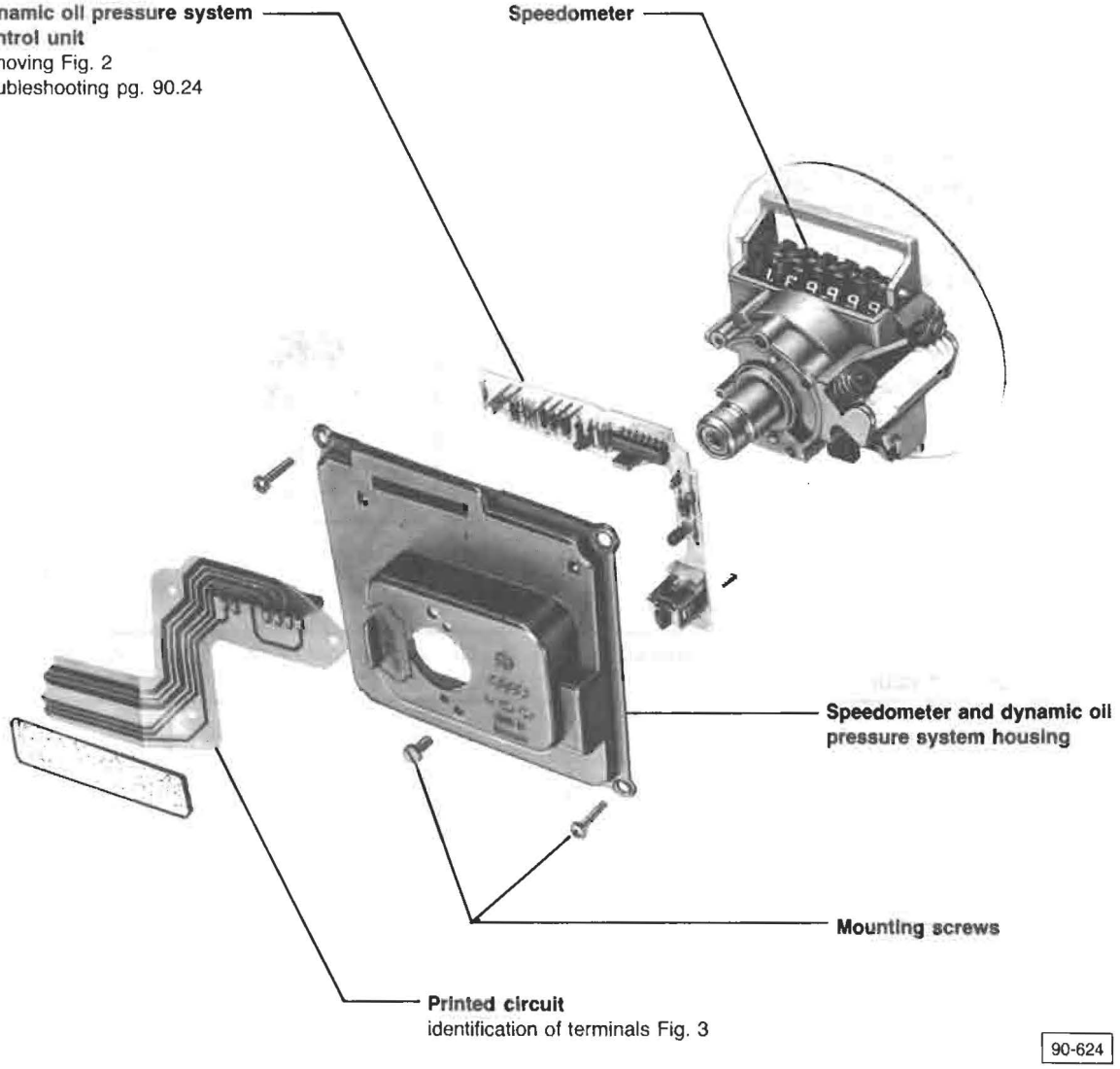

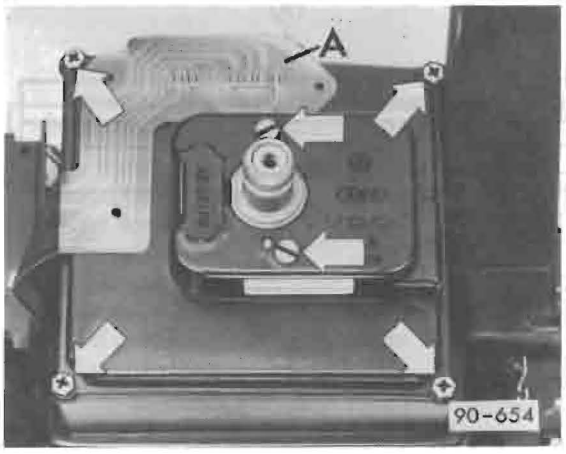

Fig. 1 Speedometer, removing

— remove printed circuit (**A**) and dynamic oil pressure system connection
— remove mounting screws (**arrows**)
— remove speedometer

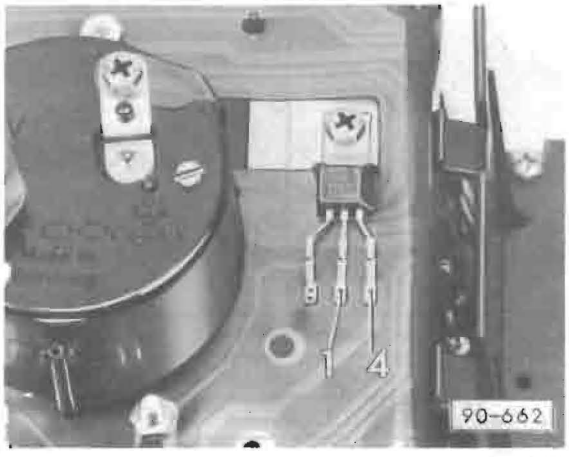

Fig. 2 Control unit for dynamic oil pressure system, removing

— remove screw (**1**)
— push mounting clips in direction of arrows
— remove dynamic oil pressure control unit

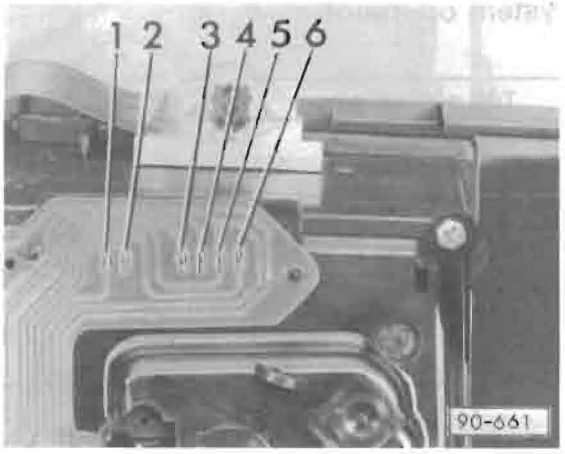

Fig. 3 Dynamic oil pressure control unit, terminal identification

1 — oil pressure switch 0.3 bar
2 — oil pressure switch 0.9 bar
3 — plus
4 — oil pressure warning light
5 — ground
6 — terminal 1

System operation

Test sequence	Operation of flashing LED (red) and buzzer*
engine not running • ignition **ON**	— LED must flash — buzzer must not sound
engine running less than 2000 rpm • wire on 0.3 bar oil pressure switch pulled off and connected to ground	— LED must flash — buzzer must not sound
engine running more than 2000 rpm • wire on 0.9 bar oil pressure switch pulled off but not connected to ground	— LED must flash — buzzer must sound

Note

If system is still not operating properly, check by Troubleshooting

Troubleshooting

Dynamic oil-pressure system light (LED) does not flash when ignition is switched **ON**

check these first:
- flashing LED (red) for fuel gauge and coolant temperature gauge is **OK**

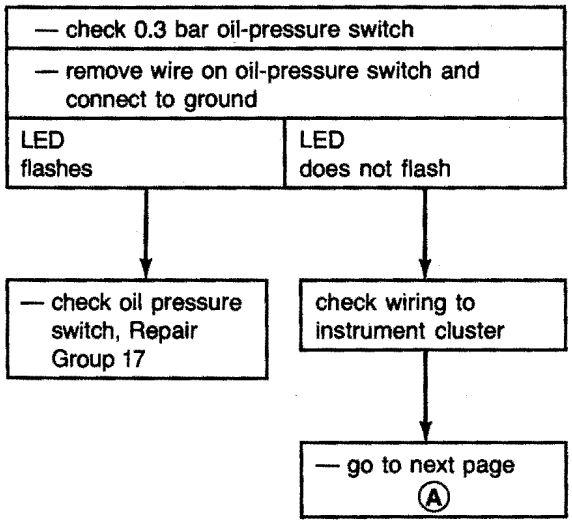

Ⓐ

check dynamic oil-pressure system

— remove instrument cluster (for following tests use 12 Volt battery as power source and voltmeter)
— connect battery ground to voltage stabilizer **1** with test probe
— connect battery ground to terminal **5** with test probe
— connect voltmeter to terminals **2** and **3**
— connect battery plus to voltage stabilizer **4** with test probe

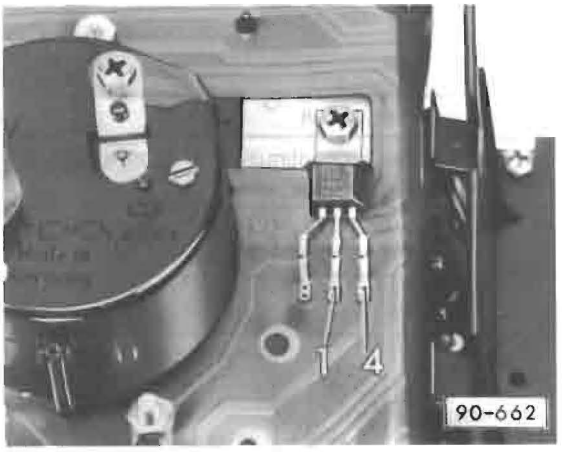

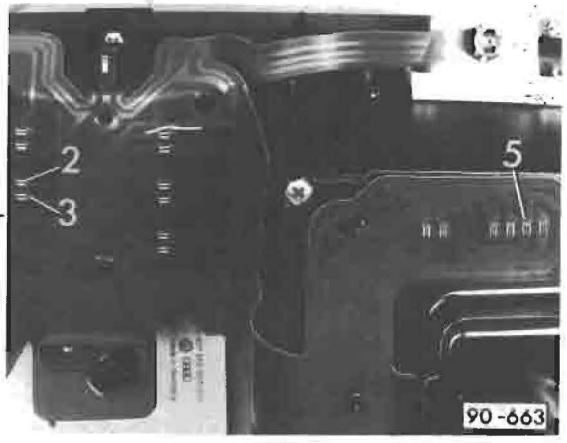

Test shows	voltmeter reading	possible causes	repair instructions
LED flashing	approx. 8.5 V	Zener diode defective	replace printed circuit and LED
	approx. 5.5 V	track of printed circuit broken	replace printed circuit
LED not flashing	approx. 5.0 V	LED defective	replace LED
	approx. 12.0 V	LED and Zener diode defective	replace printed circuit and LED
	approx. 0.0 V		

Go To
Ⓑ
NEXT PAGE

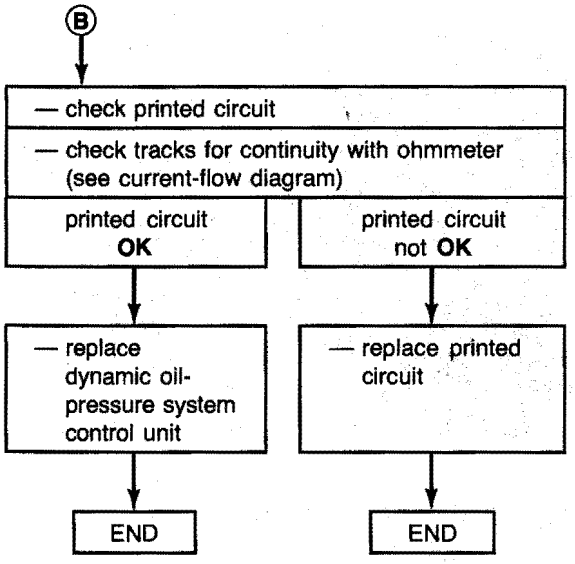
B
— check printed circuit
— check tracks for continuity with ohmmeter (see current-flow diagram)
printed circuit OK
printed circuit not OK
— replace dynamic oil-pressure system control unit
— replace printed circuit
END
END

Troubleshooting

LED flashes and buzzer sounds while driving car although oil pressure is correct

Check these first:
- fuel gauge, coolant-temperature gauge, 0.3 bar and 0.9 bar oil-pressure switches are **OK**

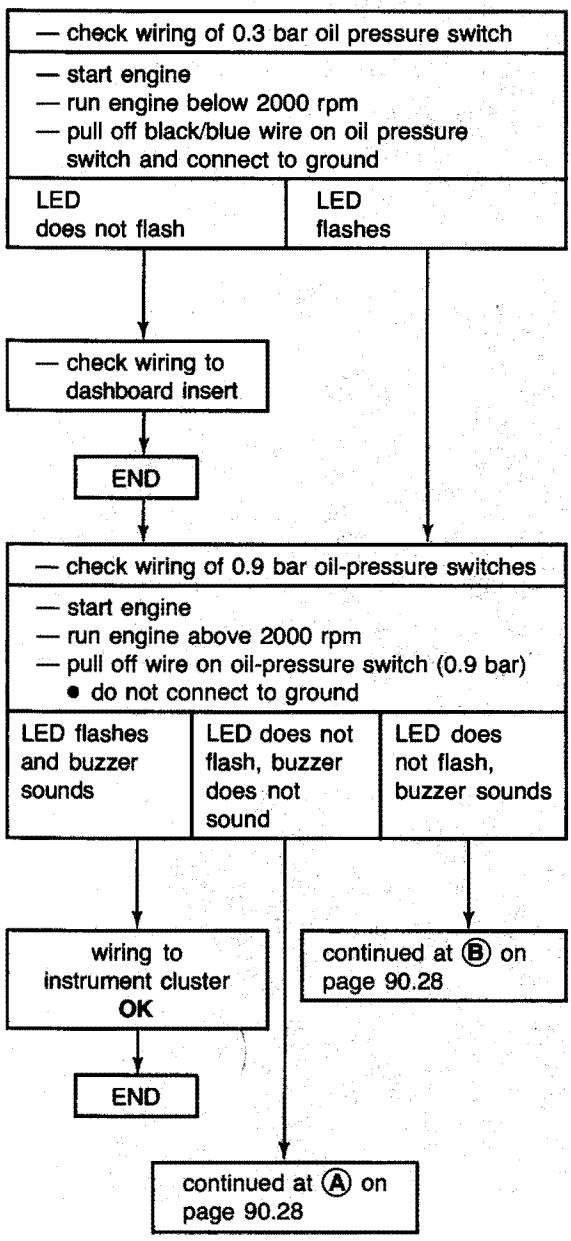

Ⓐ continued from page 90.27

check these first:
- voltage from ignition coil terminal **1** present at instrument cluster connector T14/9

voltage from ignition coil terminal **1** is not reaching oil-pressure warning-system control unit

— disconnect battery ground cable
— swing instrument cluster out
  - do not pull off connectors from instrument cluster
— connect battery ground cable
— switch ignition **ON**
— connect test light at **1**

test light does not light up	test light lights up

— replace printed circuit

END

Ⓑ continued from page 90.27

check dynamic oil-pressure system

— remove dashboard cluster (for following tests use 12 Volt battery as power source and voltmeter)
— connect battery ground to voltage stabilizer **1** with test probe
— connect battery ground to terminal **5** with test probe
— connect voltmeter to terminals **2** and **3**
— connect battery plus to voltage stabilizer **4** with test probe

continued on page 90.29

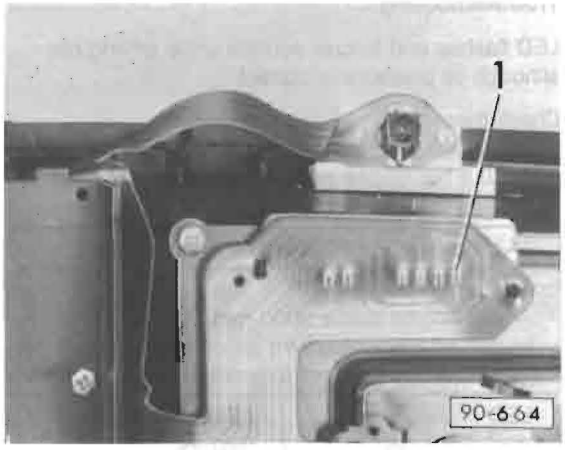

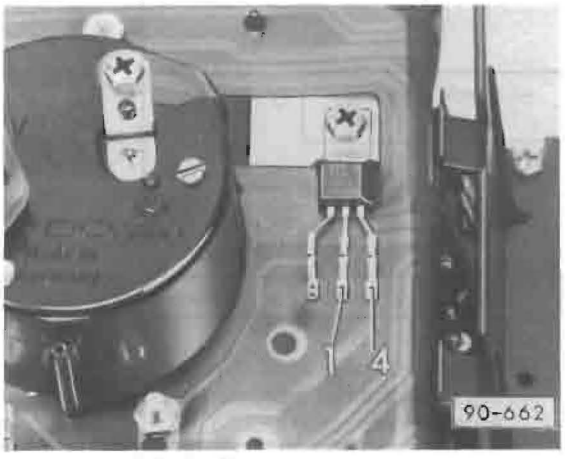

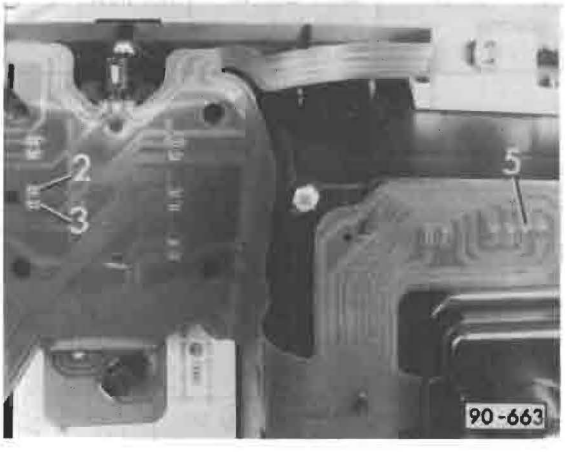

continued from page 90.28

Test shows	voltmeter reading	possible causes	repair instructions
LED flashing	approx. 8.5 V	Zener diode defective	replace printed circuit and LED
	approx. 5.5 V	track of printed circuit broken	replace printed circuit
LED not flashing	approx. 5.0 V	LED defective	replace LED
	approx. 12.0 V	LED and Zener diode defective	replace printed circuit and LED
	approx. 0.0 V		

— check printed circuit

— check tracks for continuity with ohmmeter (see current-flow diagram)

printed circuit **OK**	printed circuit not **OK**
— replace dynamic oil-pressure system control unit	— replace printed circuit
END	END

Speedometer head

As of May 1983 the existing regulations (FMVSS 127) concerning vehicle speed indication were cancelled by the Department of Transportation (DOT). Starting May 1983, the only requirement is that the vehicles' speedometer indicate a higher speed than is actually being driven.

Speedometers having European calibration specifications were installed in vehicles for model years 1984 through 1985 (until December 1984 production). These speedometer heads have a basic tolerance of (+) 6.2 miles per hour with an additional (+) 5% of the actual speed driven.
For example:

Actual Speed	50 Miles Per Hour
+ Basic Tolerance	6.2
+ 5% of Actual	2.5

Maximum indicated speed: 58.7 miles per hour*

Speedometers with the former FMVSS 127 calibration are installed starting with December 1984 production. These speedometer heads have a tolerance of (+) 3 miles per hour.
For example:

Actual Speed	50 Miles Per Hour
+ Basic Tolerance	3 Miles Per Hour

Maximum indicated speed: 53 miles per hour*

***Note**

It is required that vehicles be equipped with OEM tires and wheels showing only normal tire wear.

Odometer

The odometer reading is independent of the speed indication and is regulated by the Federal Trade Commission (FTC). The tolerance of the odometer indication is (−) 1% to (+) 3.75% of the actual number of miles driven.

Note

The number printed on the speedometer face plate beneath the word MPH shows the number of revolutions required by the speedometer cable multiplied by 100 to travel a distance of 1/100th of a mile (52 feet, 9.5 inches).

Two different cigarette lighters are used in Volkswagen vehicles and they are **NOT** interchangeable. If installed in the wrong vehicle it is possible that the lighter will not release properly, thus creating a possible safety hazard.

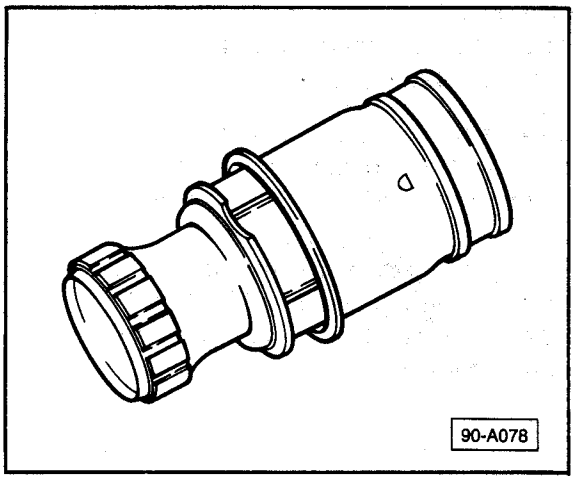

Fig. 1 Part number 175.919.307B

Application: Rabbit — all
Pickup — all
Golf — all
GTI — all

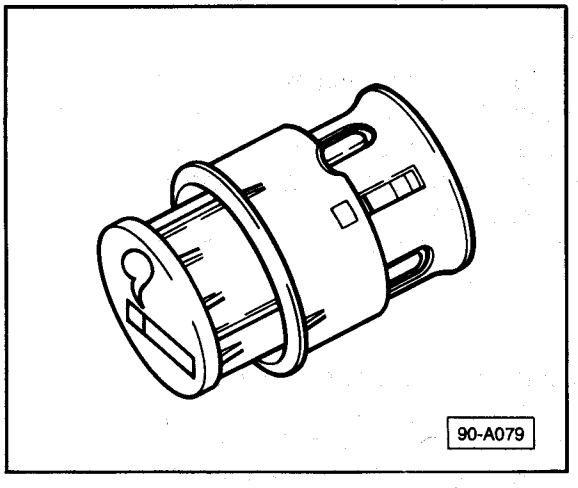

Fig. 2 Part number 171 919 305 or 191 919 305

Application: Cabriolet — all
Jetta — all
Vanagon — all
Quantum — all
Scirocco — all

Heidelberg VI fixed coded radio, coding

The Heidelberg VI radio is assigned a fixed four digit security code from the factory. Unlike previous coded radios, **the security code cannot be changed**.

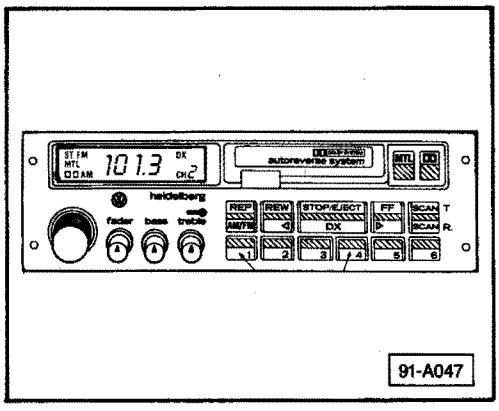

The Heidelberg VI radio can be identified by white lettering on the face plate and separate knobs for fader, bass and treble control.

The radios are not coded at the factory. To activate the theft protection, the radio must be coded during the Pre-Delivery Inspection.

The security code and serial number of the radio are printed on a removable sticker located on the right "B" post near the vehicle identification sticker.

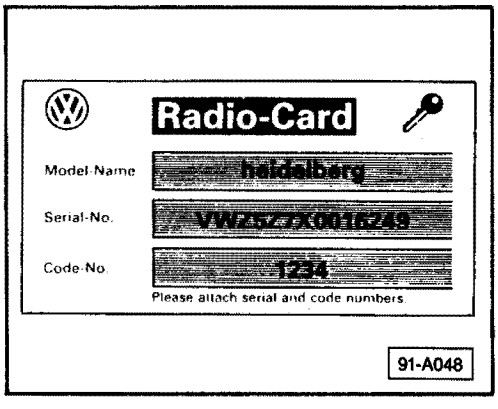

Coding a new or remanufactured radio

- remove radio security code/serial number sticker and attach to radio card in radio owner's manual

CAUTION

DO NOT keep the security code or radio card with the vehicle. Always instruct customers to detach radio card from operating instructions manual and keep in a safe place.

Note

The security code/serial number sticker for remanufactured replacement radios comes in the box with the new radio. Place the new sticker over the old sticker on the radio card.

- switch radio **ON**
  - radio plays and radio station frequency is displayed

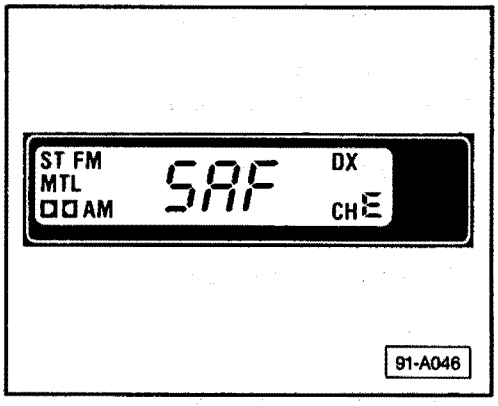

- push and hold **AM/FM** and **SCAN** buttons to activate coding procedure
  - radio display changes to **CODE** and then **1000**
- release **AM/FM** and **SCAN** buttons
  - **1000** will remain on display
- enter radio's security code using first four program station buttons
  - security code will appear on display
- push and hold **AM/FM** and **SCAN** buttons once again until display changes to **SAFE**

Note

A new or remanufactured radio will only accept its factory assigned security code. If an incorrect code is entered, the radio display will not change to **SAFE**.

- release **AM/FM** and **SCAN** buttons
  - radio display changes to a radio station frequency
  - radio is now coded

Reactivating radio after reconnecting power

After disconnecting power (fuse, battery, etc.), the radio will lock up electronically.

To reactivate:

- obtain radio's security code
  - located on radio card
- switch radio **ON**
  - radio will not play
  - radio display shows **SAFE**
- push and hold **AM/FM** and **SCAN** buttons
  - display changes to **1000**
- release **AM/FM** and **SCAN** buttons
  - **1000** remains on display

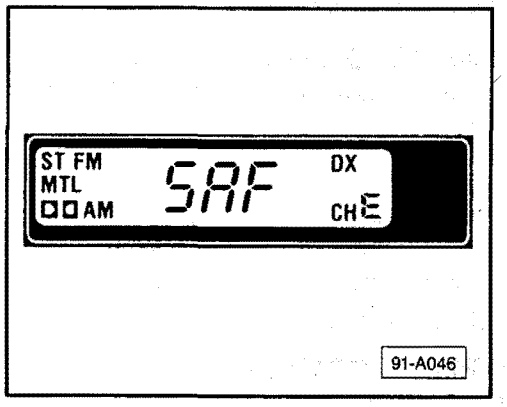

Note

If the **AM/FM** and **SCAN** buttons are held down too long or pushed again, the radio will misinterpret the **1000** as an attempt at coding and one incorrect attempt will be logged.

- enter radio's security code using first four program station buttons
  - security code will appear on display
- push and hold **AM/FM** and **SCAN** buttons once again until display changes to **SAFE**
- release **AM/FM** and **SCAN** buttons
  - radio display changes to a radio station frequency
  - radio is now coded and plays

Unlocking an electronically locked radio

After two incorrect attempts at entering the security code, the radio will lock-up electronically. The display shows **SAFE** and will not change.

To unlock:

- leave radio switched **ON** for approximately one hour
- after one hour, reactivate (code) radio as it would be after a power interruption

Note

The radio will never permanently lock-up no matter how many incorrect coding attempts are made. The reactivation procedure can be repeated indefinitely.

Electrical System
Windshield Wiper
Windshield Washer

Quick Data

Index

—Assembly 92.2
—Rear window
  washer/wiper 92.5, 92.6
  washer pump 92.7
—Spray jets 92.4
–Troubleshooting 92.8, 92.9
–Windshield washer 92.4
–Wiper arms/motor 92.3
–Wiper blade rubber insert 92.3

CAUTION

Before starting to work on any part of electrical system, disconnect battery ground strap

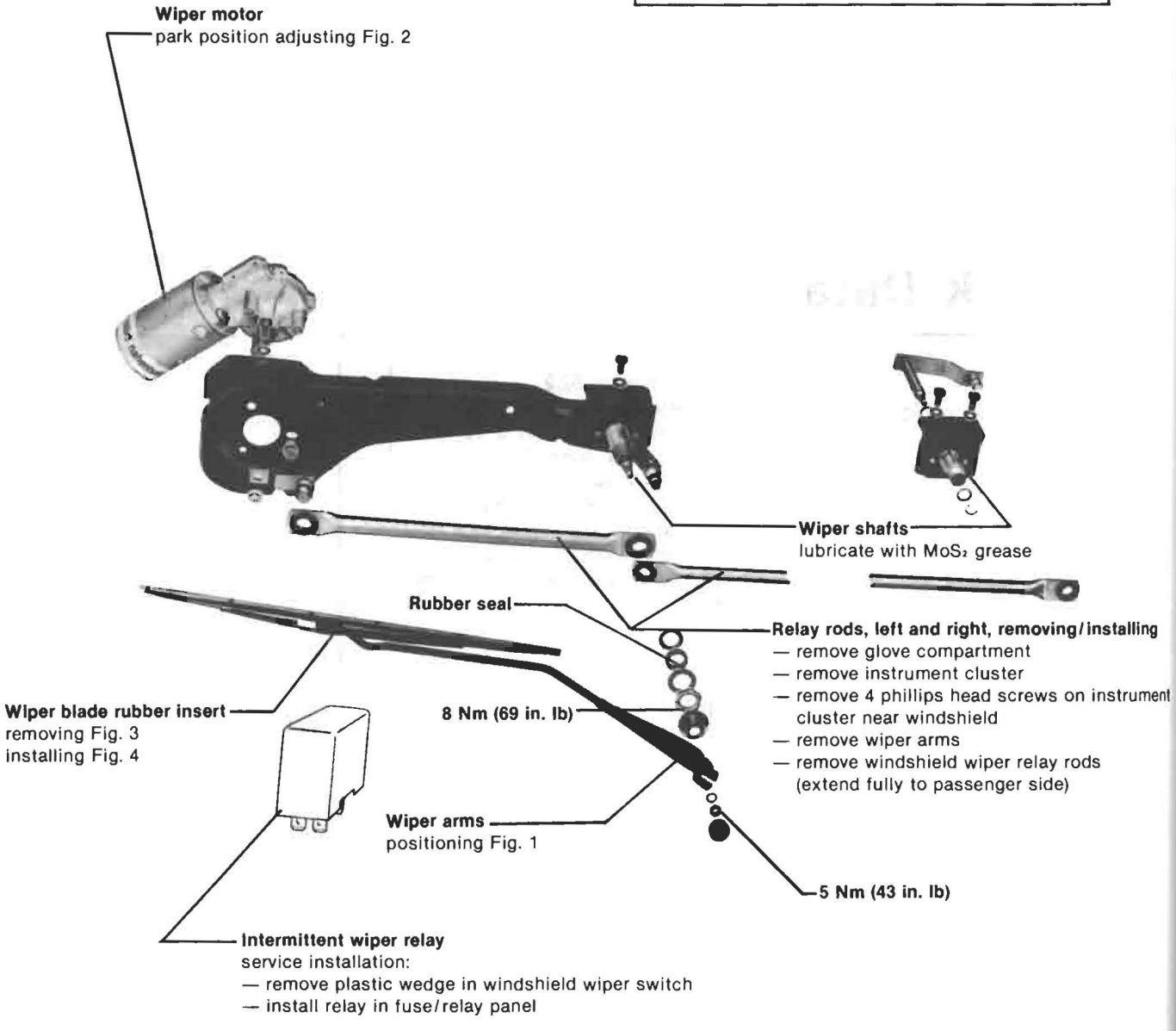

92-305

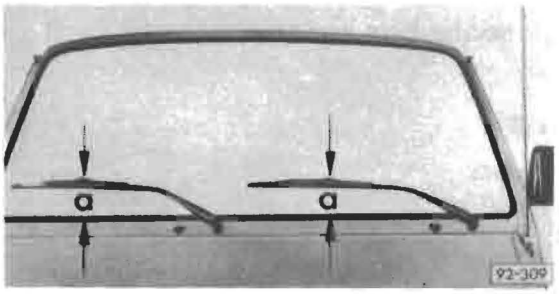

Fig. 1 Wiper arms, positioning

— position wiper blades parallel to windshield seal
• **a** = 70 mm (2 3/4 in.)

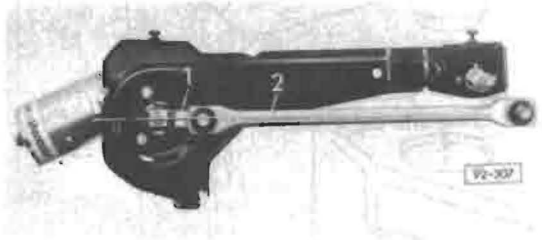

Fig. 2 Wiper motor park position, adjusting

— run wiper motor to stop position
— align crank **1** and relay rod **2** in direction of line
— attach crank **1** to wiper motor shaft

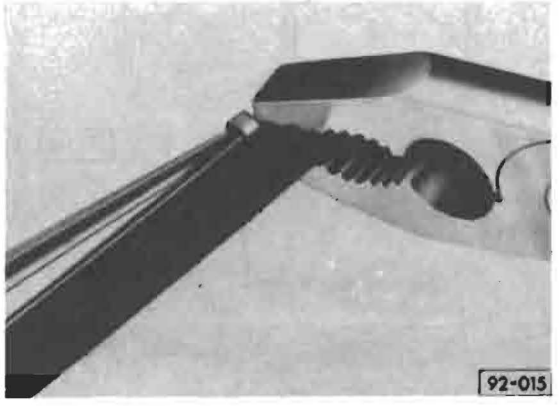

Fig. 3 Wiper blade rubber insert, removing

— squeeze metal inserts at open end of rubber insert
— pull metal inserts out of retainer
— remove rubber insert

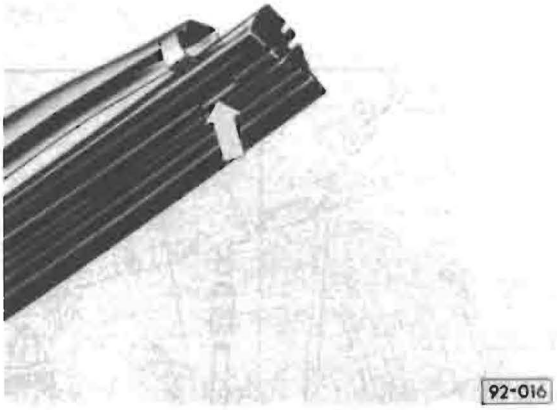

Fig. 4 Wiper blade rubber insert, installing

— slide metal inserts into rubber insert upper grooves. Notch in metal insert must face rubber insert
— slide rubber insert into retainers. Retainers must engage recess in second groove (arrow)

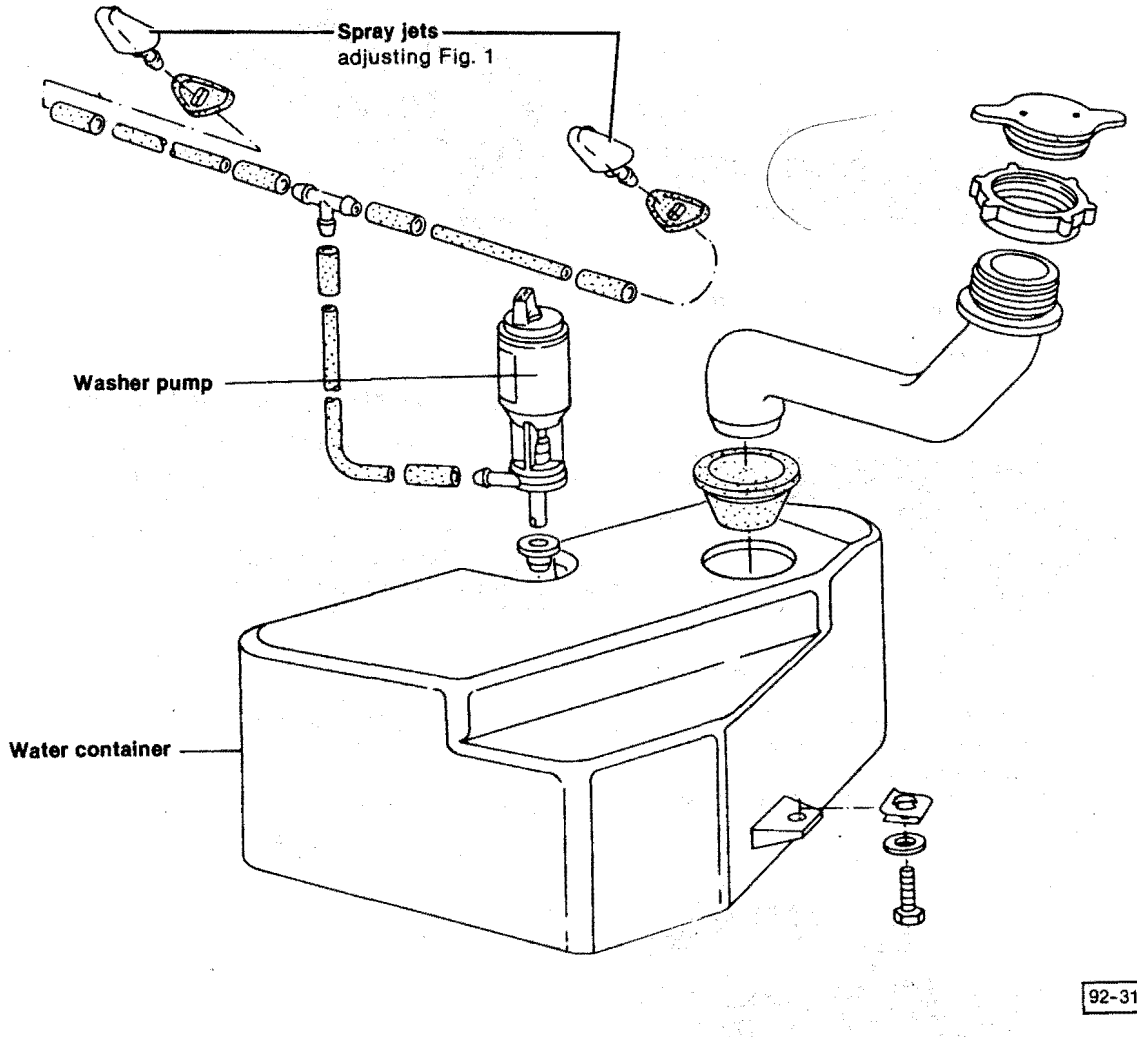

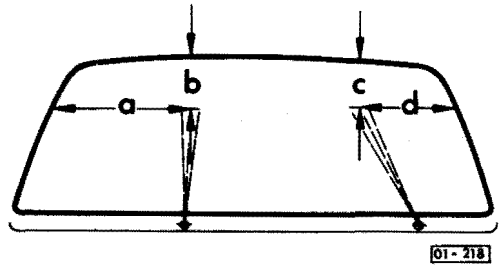

Fig. 1 Spray jets, adjusting

— adjust spray jets using pin, until water is directed onto windshield as shown
a = 490 mm (19 in.)
b = 220 mm (9 in.)
c = 190 mm (7 1/2 in.)
d = 330 mm (13 in.)

Rear window washer and wiper system, repairing

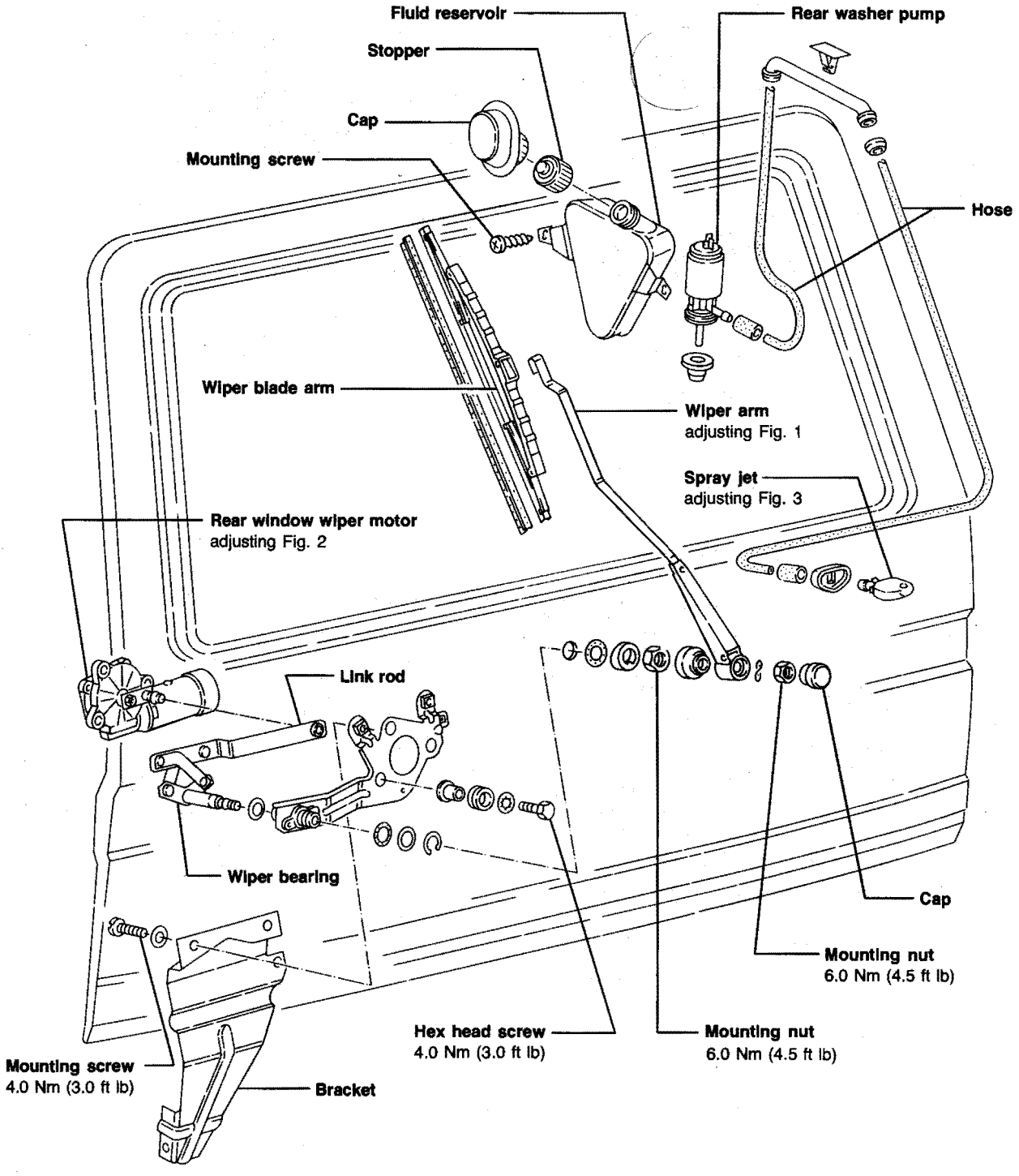

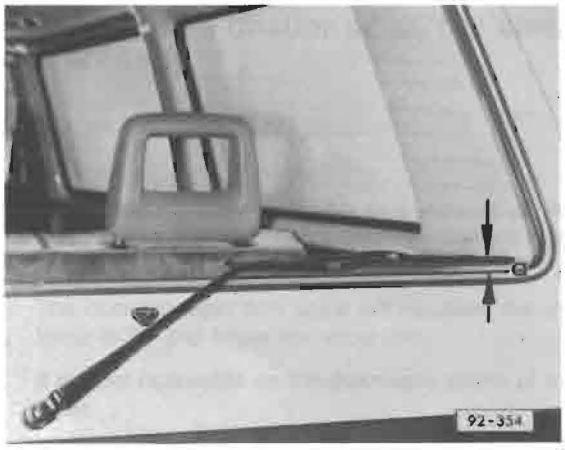

Fig. 1 Rear window wiper arm, adjusting end position

a = 27 mm

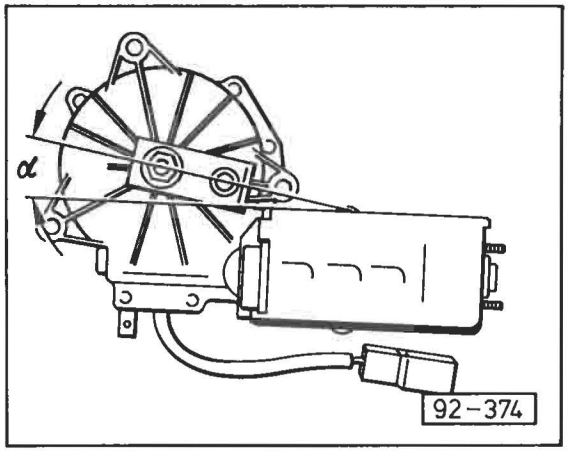

Fig. 2 Wiper motor, park position, adjusting

— let wiper motor run to stop position
— attach crank and adjust as in illustration
α = 8°



Fig. 3 Spray nozzle, adjusting

— center of wiping field

Rear window wiper, removing and installing

Removing

— remove cover in back hatch

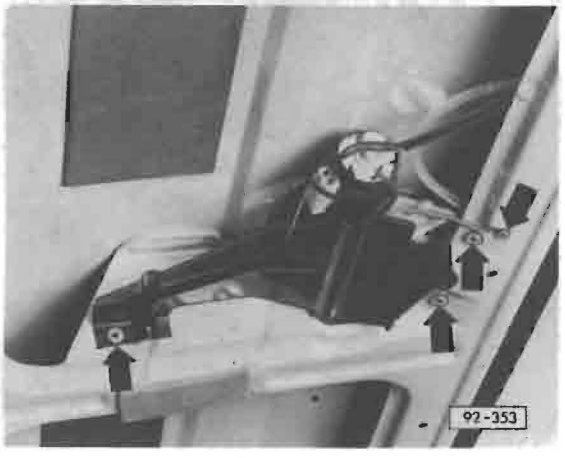

— remove screws (**arrows**) and pull out connector

Installing

— install in reverse order

Rear window washer pump, removing and installing

Removing



— remove right rear trim panel
— remove screws (**arrow**)
— remove fluid reservoir

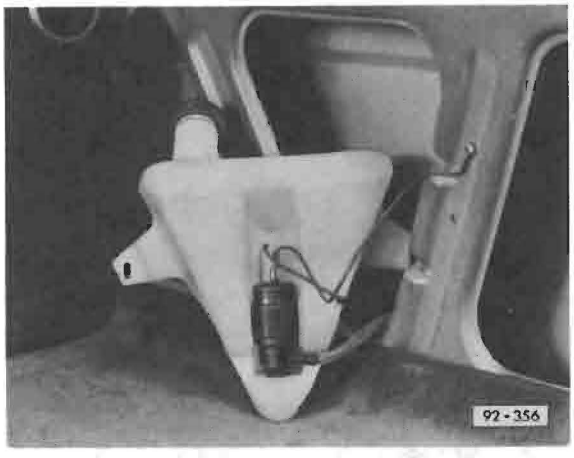

— take pump out of guides on fluid reservoir

Installing

— install in reverse order

Windshield wipers chatter or do not clean window properly

Windshield wiper blade chatter and skipping of blade across windshield can be caused by incorrect wiper arm angle.

The incorrect wiper arm angle will not allow the wiper blade to flip and follow the wiper arm.

It is most noticeable on the downward stroke of the wiper.

To adjust wiper arm,

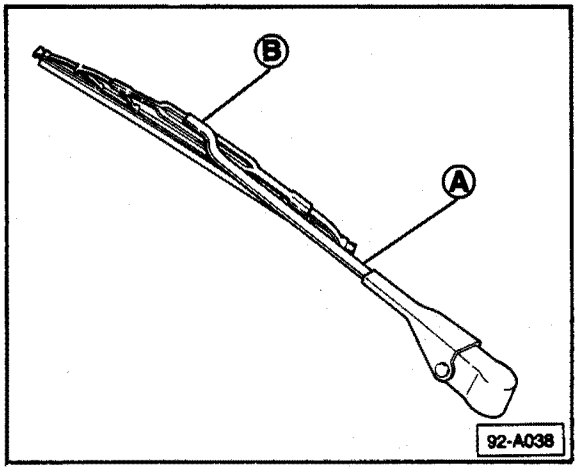

— hold wiper arm with duckbill pliers at **A**
— bend wiper blade arm at **B** to obtain correct wiper blade angle

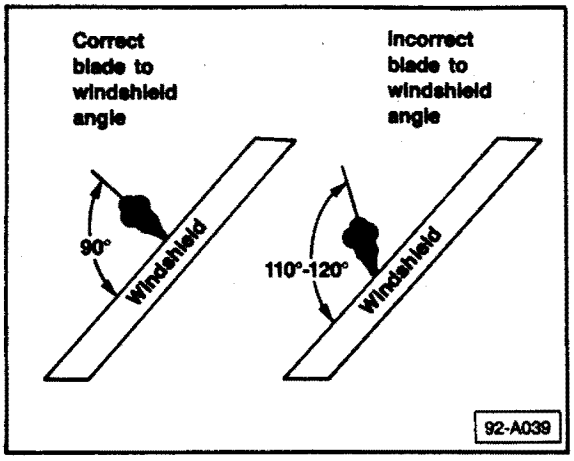

Angle of blade to windshield

Wax and dirt build up on windshield wiper blades can cause streaking and smearing on windshield when using wipers.

— **do not replace** windshield blades that may only need to be cleaned

— clean wax and dirt build up from wiper blades and entire windshield with alcohol based cleaning solution or rubbing alcohol and water

— see troubleshooting chart on page two

— refer customer to instructions in Owner's Manual

more

Windshield wiper troubleshooting chart

Symptoms	Possible causes	Solutions
Bad wiping (sheeting) 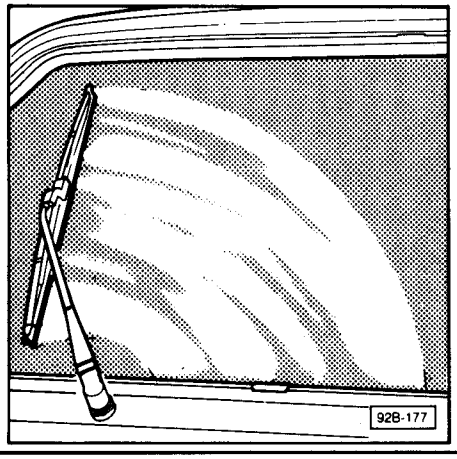	• dirty blade lip • blade lip worn, torn or broken • old blade lip	— clean blade lip with wet cloth and soap — rinse with water — replace blades — replace blades
Some water remains in the wiping area, forming droplets 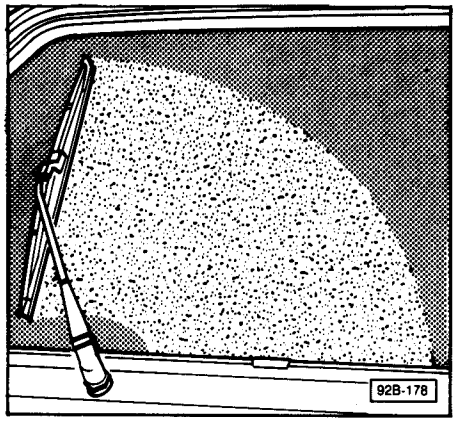	• windshield glass contaminated by pollutants, oil or film from diesel engine exhaust	— clean windshield glass with clean cloth soaked in solution of alcohol (or ammonia) and warm water
Windshield wiper blades clean to one side and are deficient to the other (chatter) 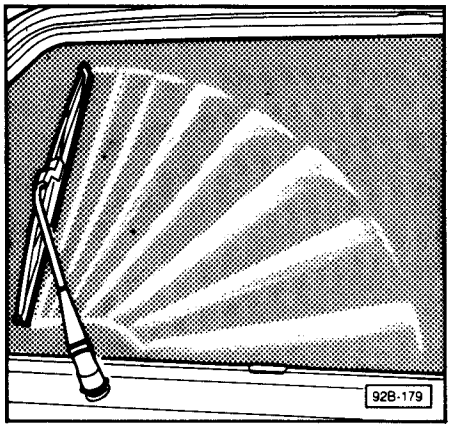	• blade lips are deformed or filled with dirt or foreign matter on one side. • windshield wiper arms are twisted. Rubber lips do not touch glass properly • glass is dirty or not wet enough, resulting in varying friction between blade and glass	— replace blades — bend wiper arm to obtain proper blade contact — clean the glass with clean cloth soaked in solution of alcohol (or ammonia) and warm water

Electrical System
Lights

Quick Data

Index

– Aerodynamic 94.5a
– Bulb holder 94.6
– Headlight 94.4
  adjusting 94.5
  mounting frame 94.5
  removing 94.5
– Ignition key
  deburring 94.3a
— Intermittent windshield wiper 94.4
— Steering column
  covers 94.3
  lock 94.3
  lock cylinder 94.4
  switches 94.2
— Tail-light 94.6
— Turn signal switch 94.3

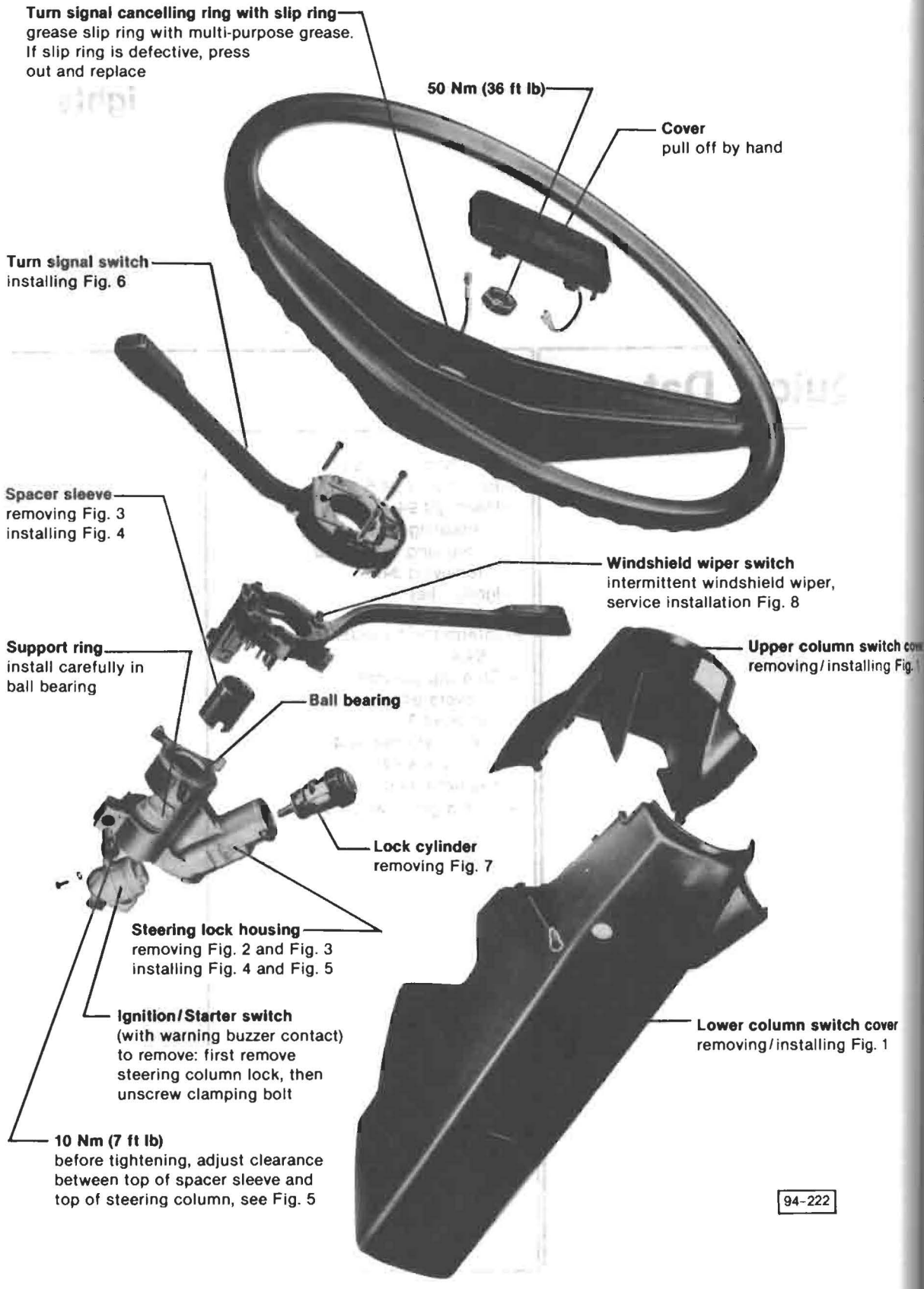
Turn signal cancelling ring with slip ring
grease slip ring with multi-purpose grease. If slip ring is defective, press out and replace
50 Nm (36 ft lb)
Cover
pull off by hand
Turn signal switch
installing Fig. 6
Spacer sleeve
removing Fig. 3
installing Fig. 4
Windshield wiper switch
intermittent windshield wiper, service installation Fig. 8
Support ring
install carefully in ball bearing
Ball bearing
Upper column switch cover
removing/installing Fig. 1
Lock cylinder
removing Fig. 7
Steering lock housing
removing Fig. 2 and Fig. 3
installing Fig. 4 and Fig. 5
Ignition/Starter switch
(with warning buzzer contact)
to remove: first remove steering column lock, then unscrew clamping bolt
Lower column switch cover
removing/installing Fig. 1
10 Nm (7 ft lb)
before tightening, adjust clearance between top of spacer sleeve and top of steering column, see Fig. 5
94-222

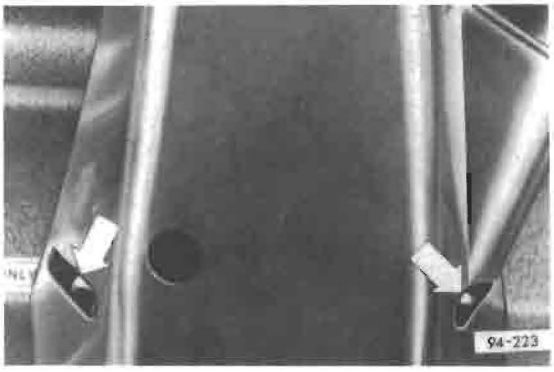

Fig. 1 Upper/Lower column switch covers, removing/installing

— remove two screws (arrows)
— remove clip on lower cover from column tube
— remove both column switch covers



Fig. 2 Steering lock housing, removing/installing

— hold coupling together using VW 267a



Fig. 3 Steering lock housing/Spacer sleeve, removing

— pull off steering lock housing together with spacer sleeve



Fig. 4 Steering lock housing/Spacer sleeve, installing

— installing steering lock housing with support ring onto column tube
— drive spacer sleeve on column using VW 420
— adjust clearance (see Fig. 5)



Fig. 5 Steering lock housing, installing

— adjust clearance between top of spacer sleeve and top of column
• **a** = 51 mm (2 in.)



Fig. 6 Turn signal switch, installing

— adjust clearance between steering wheel and turn signal switch
• **a** = 2 to 4 mm (1/16 to 3/16 in.)

Note

Burrs on ignition key and/or metal shavings in the lock cylinder could make key insertion difficult.

If this occurs,

– deburr the keys

If key insertion and operation is still difficult,

– replace ignition lock cylinder and deburr new keys

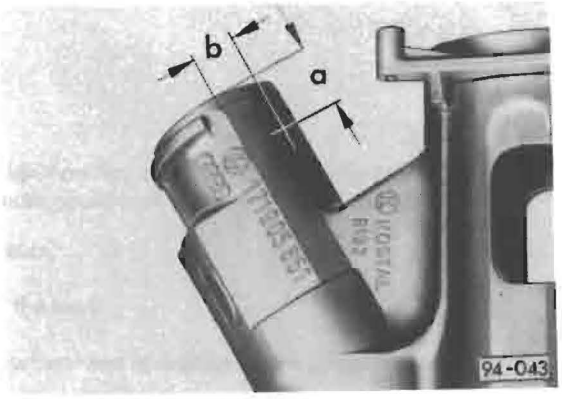

Fig. 7 Steering lock cylinder, removing

— carefully drill 3 mm (1/8 in.) hole into housing
- **a** = 12 mm (1/2 in.)
- **b** = 10 mm (3/8 in.)

— press in pin with punch through drilled hole and pull out lock cylinder

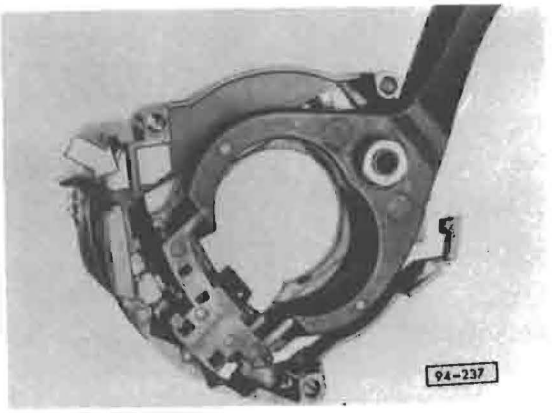

Fig. 8 Intermittent windshield wiper, service installation

— remove plastic wedge (arrow) from opening in windshield wiper switch
— install windshield wiper/washer intermittent relay

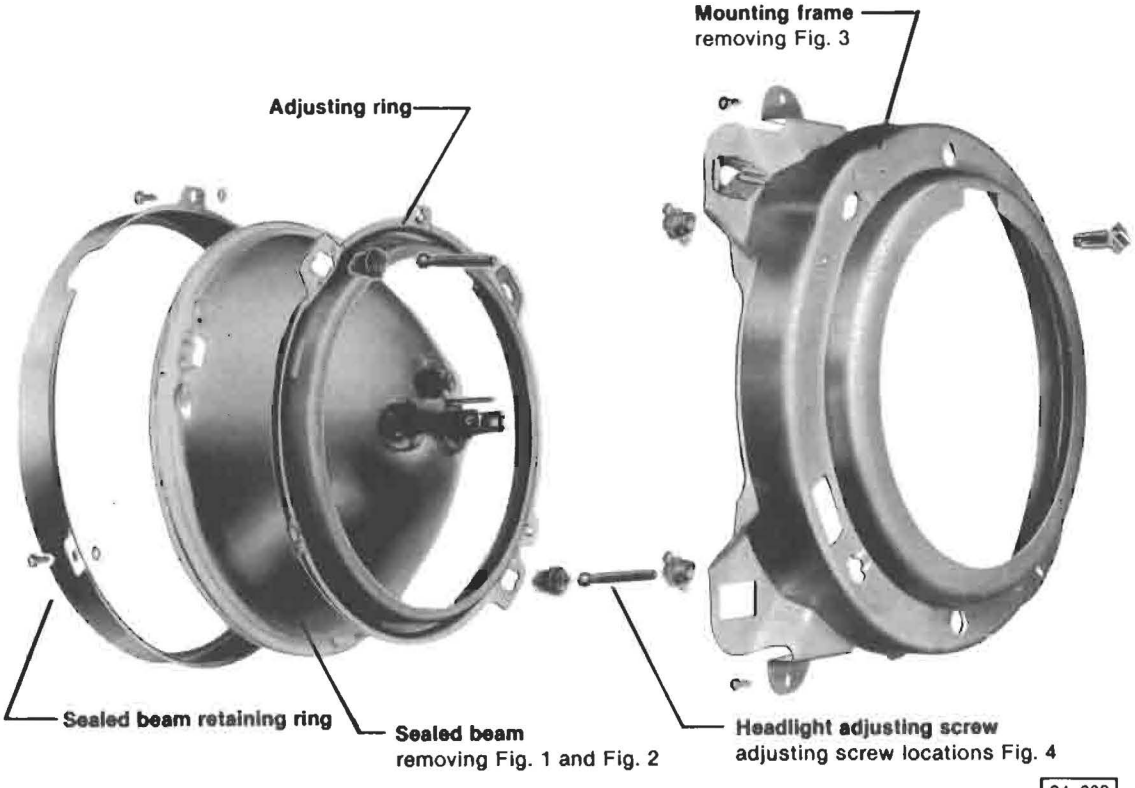

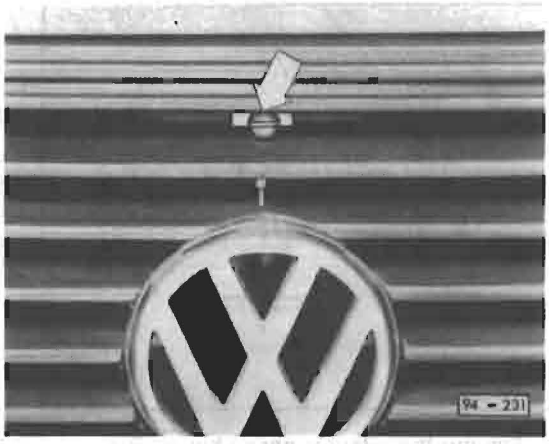

Fig. 1 Sealed beam, removing

— remove grille by turning retainers (arrow) 90°

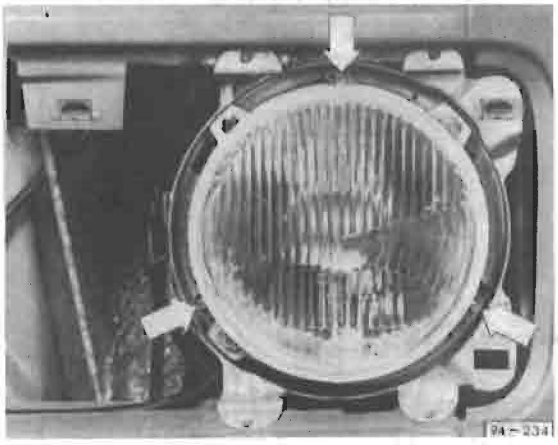

Fig. 2 Sealed beam, removing

— remove retainer ring screws (arrows)
— remove sealed beam

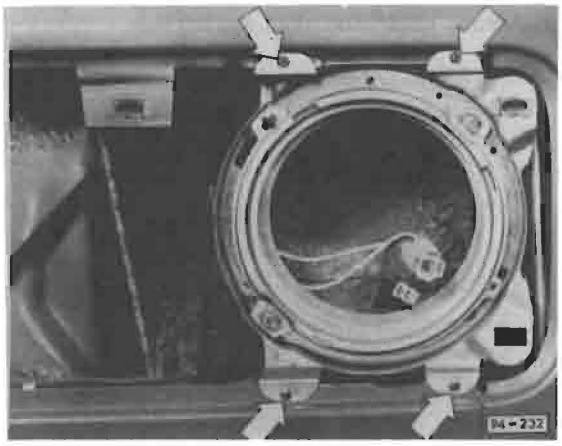

Fig. 3 Mounting frame, removing

— remove screws (arrows)

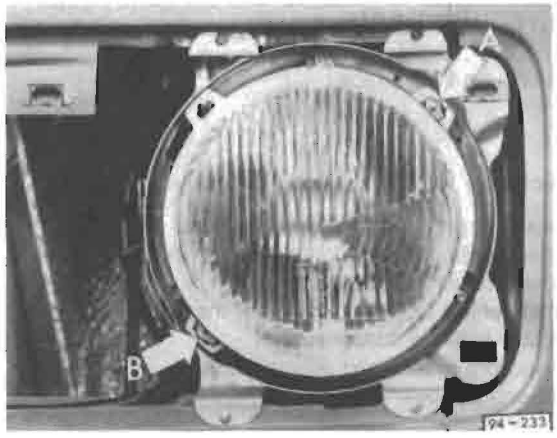

Fig. 4 Headlight, adjusting screw locations

- arrow **A** = left/right adjustment
- arrow **B** = high/low adjustment

Note

Always adjust headlights using Weaver WX-50 tester or equivalent in accordance with local laws

Aiming requirements

— park vehicle on flat surface

Note

It is not necessary that the surface be exactly level.

— remove any large accumulations of mud or ice from wheel wells, fender undersides, bumpers etc.
— check and correct tire pressures
— verify that vehicle has no loads other than driver
— rock vehicle to settle suspension
— clean headlight lenses and aiming pads
— check hi and low beam headlight operation

Setting up universal adaptor

Note

Use adaptor 0203 when aiming Vanagon aerodynamic headlights with Hoppe headlight aiming equipment.

— locate aim setting pads on headlight lens

Note

The settings are designated by the letters **V** and **H**, followed by a number.

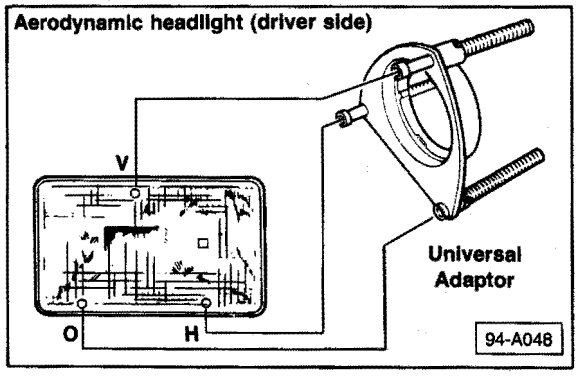

Fig. 1 Aiming pad locations

V = vertical setting
H = horizontal setting
O = inside aiming pad (set always to zero)
— locate
— move adjustable rods of adaptor to correspond to settings found on headlight

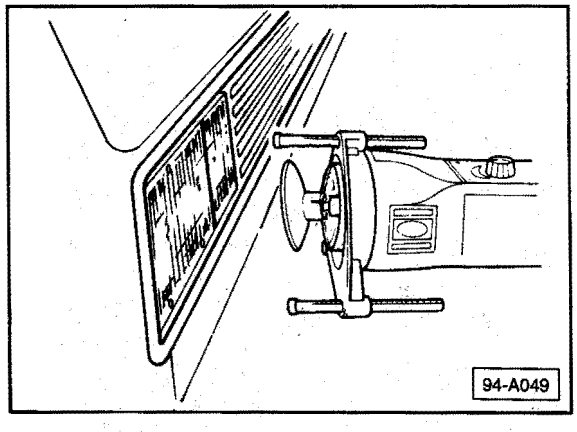

Fig. 2 Placing the adaptor assembly on the aiming pads

— attach aiming device to adaptor
— mount assembly to headlight lens. See Fig. 2.

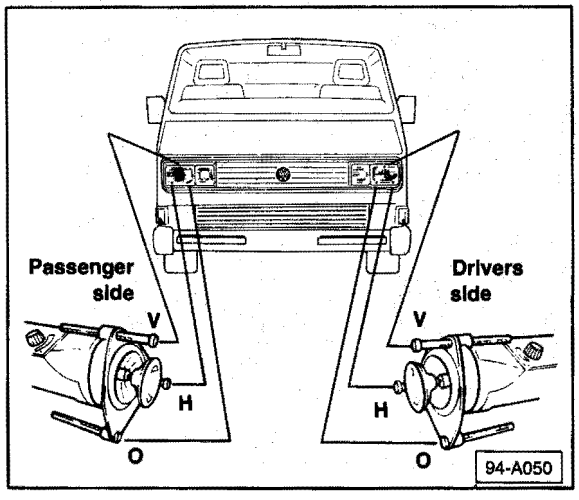

Fig. 3 Adaptor installation, right and left side

— check headlight aim using mechanical aiming procedure provided by equipment manufacturer
— correct if necessary

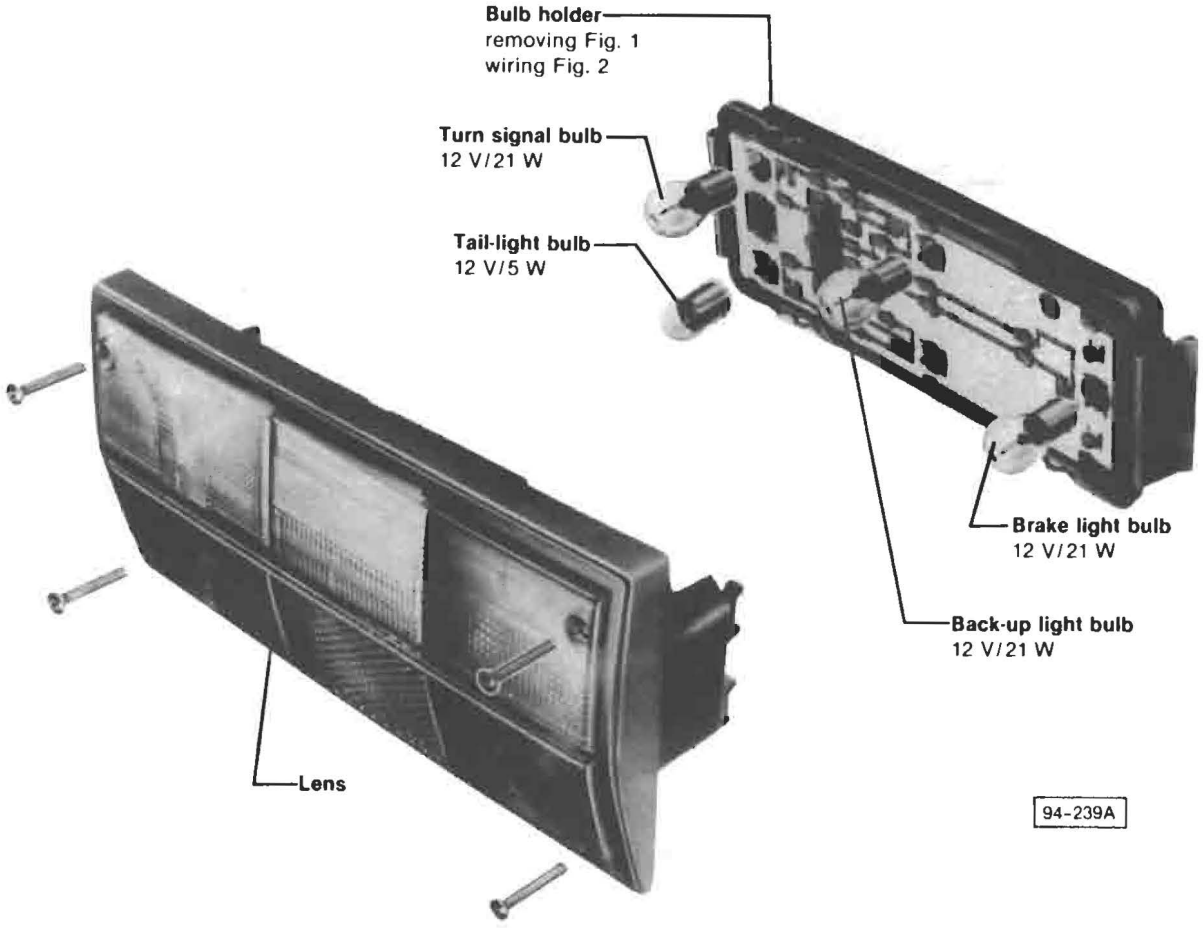

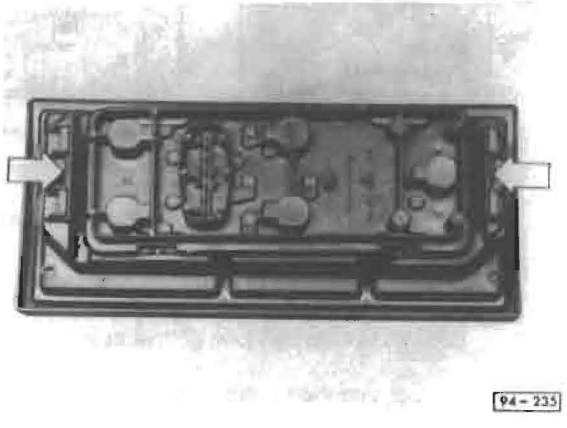

Fig. 1 Bulb holder, removing

— squeeze at arrows and remove

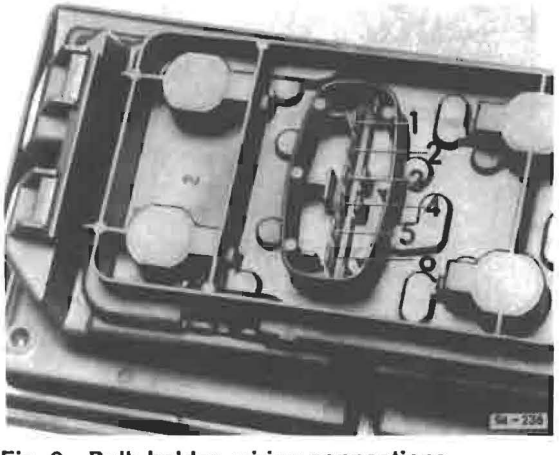

Fig. 2 Bulb holder, wiring connections

1 = to tail-light bulb 12 V/5 W
2 = vacant
3 = to ground
4 = to brake light bulb 12 V/21 W
5 = to back-up light bulb 12 V/21 W
6 = to turn signal light bulb 12 V/21 W

Electrical System—Wiring, General

Index

General
— Battery/Ground cables
97.9a, 97.9b
disconnecting/connecting 97.6
— Cautions and Warnings 97.2
— Dashboard wiring harness 97.7
— Engine/Body ground
connections 97.6
— Fuse/Relay panel, removing
(1980-1985) 97.10
(from 1986 m.y.) 97.10a
— How to read wiring diagrams 97.4
— Main wiring harness 97.8
— Starter cable routing 97.9
— Symbols used in
wiring diagrams 97.5
— Troubleshooting 97.3
— Working on the electrical
system 97.3

Air-cooled AFC
— Refer to 97.11

Camper
— Refer to 97.29

Diesel
— Refer to 97.35

Waterboxer/Syncro
(Water-cooled Digifant, Digijet)
— Refer to 97.53

Cautions and Warnings

Whenever working on Volkswagen cars, follow procedures described in the appropriate section of the Repair Manual. Use of tools or procedures other than those recommended may be detrimental to the safe operation of the vehicle as well as the safety of the person doing the repair.

Before working on any car, read Cautions and Warnings:

CAUTION

- If you lack the skills, tools and equipment, or a suitable workshop for repair on the electrical system, we suggest you leave such repairs to an Authorized Dealer or other qualified shop.
- Before starting a job, make certain that you have all necessary tools and parts on hand. Read all instructions thoroughly; do not attempt shortcuts. Use tools appropriate to the work and use only replacement parts meeting Volkswagen specifications. Makeshift tools, parts, and procedures will not make good repairs.
- Before working on any part of electrical system, disconnect battery ground cable. Do not substitute fuse links with fuse links of other wire gauge or with standard wire. Always replace entire length of fuse link.
- Relay locations are subject to change and may vary from vehicle to vehicle depending on options.
- Use extreme care when troubleshooting the electrical system.
- If you encounter problems identifying a particular relay, consult your Parts Department.

WARNING

- Never work under a lifted car unless it is solidly supported on stands intended for the purpose. Do not support a car on cinder blocks, hollow tiles, or other props that may crumble under continuous load. Do not work under a car that is supported solely by a jack.
- If you are going to work under a car on the ground, make sure that the ground is level. Block the wheels to keep the car from rolling. Disconnect the battery ground strap to prevent others from starting the car while you are under it.
- Never run the engine unless the work area is well-ventilated. Carbon monoxide kills.
- Tie long hair behind your head. Do not wear a necktie, scarf, loose clothing, or necklace when you work near machine tools or running engines. If your hair, clothing, or jewelry were to get caught in the machinery, severe injury could result.
- Illuminate your work area adequately but safely. Use a portable safety light for working inside or under the car. Make sure its bulb is enclosed by a wire cage. The hot filament of an accidentally broken bulb can ignite spilled fuel or oil.
- Finger rings should be removed so that they cannot cause electrical shorts, get caught in running machinery, or be crushed by heavy parts.
- Keep sparks, lighted matches, and open flame away from the top of the battery. If hydrogen gas escaping from the cap vents is ignited, it will ignite gas trapped in the cells and cause the battery to explode.
- Always observe good workshop practices. Wear goggles when you operate machine tools or work with battery acid. Gloves or other protective clothing should be worn whenever the job requires it.

Working On The Electrical System

The electrical system of our cars is getting more and more sophisticated. If guesswork and hit-and-miss replacement of parts did not work in the past when attempting repairs, it surely won't work today.

The schematics in this book are called "Wiring Diagrams." By showing how electrical current flows through electrical components that work together in circuits, troubleshooting is much easier with these schematics.

Each diagram in this book shows the powerflow through all wires, connectors, switches, and motors beginning at the top of the page down to ground at the bottom. A test light, or better still, a volt/ohm meter can be very helpful for testing circuits.

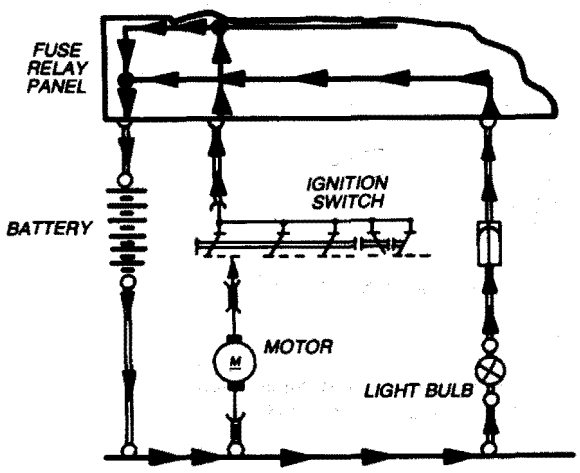

To trace a circuit you should start with the ground and then follow the wires back to the source of power. Note the color of wires in the diagram. Sometimes the color will be different on the car. Don't be concerned, just be sure to learn that the wires connect the proper terminals.

To learn more about the details in the diagrams, see 'How to read wiring diagrams' on page 97.4.

Troubleshooting Procedure

Verify the complaint:

If you are a professional mechanic, check customer's complaint to understand what the problem is. If possible, let customer show you what happens.

Analyze the problem:

Find the diagram in the book that applies to the car. Identify the circuit that most likely affects your problem. By following the circuit from ground to power source, get an understanding of how the circuit works.

Find the problem:

You will find the problem if you follow a simple and logical step-by-step procedure. Test portions of the circuit, one at a time, starting with the most likely area. Test at points that you can reach easily.

Repair the problem:

When you find the cause of the problem, make the repair.

Check the results:

Be sure it works. Check all parts of the circuit that you worked on.

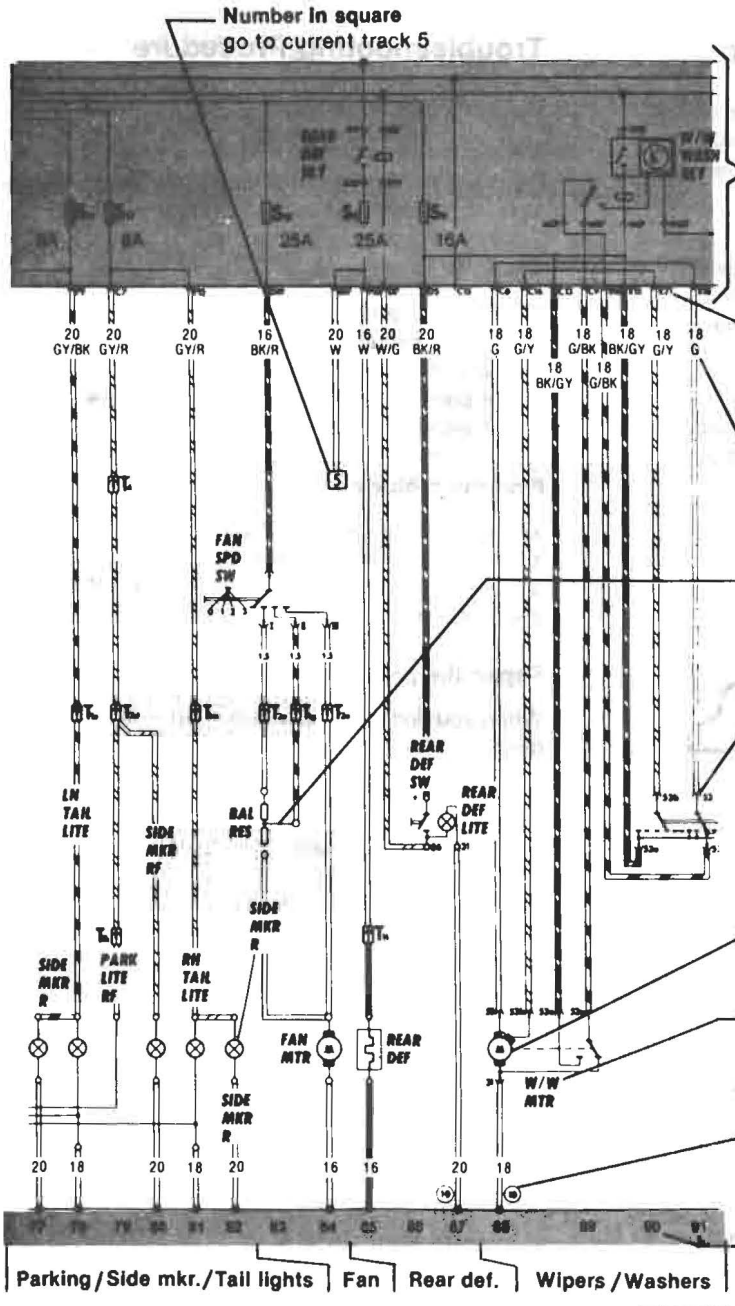

Sample legend

Description

Parking light, right front
Rear window defogger element
Rear window defogger indicator light
Rear window defogger relay
Rear window defogger switch
Sidemarker, right front
Sidemarker, rear
Tail light, right
Windshield wiper intermittent switch
Windshield wiper motor

Current Track



Where to find a wire connector on car

Wire Connectors

T2d – behind dash
T2e – behind dash
(10) – Ground connector, instrum. clstr.
(11) – Ground connector, body

Current Track



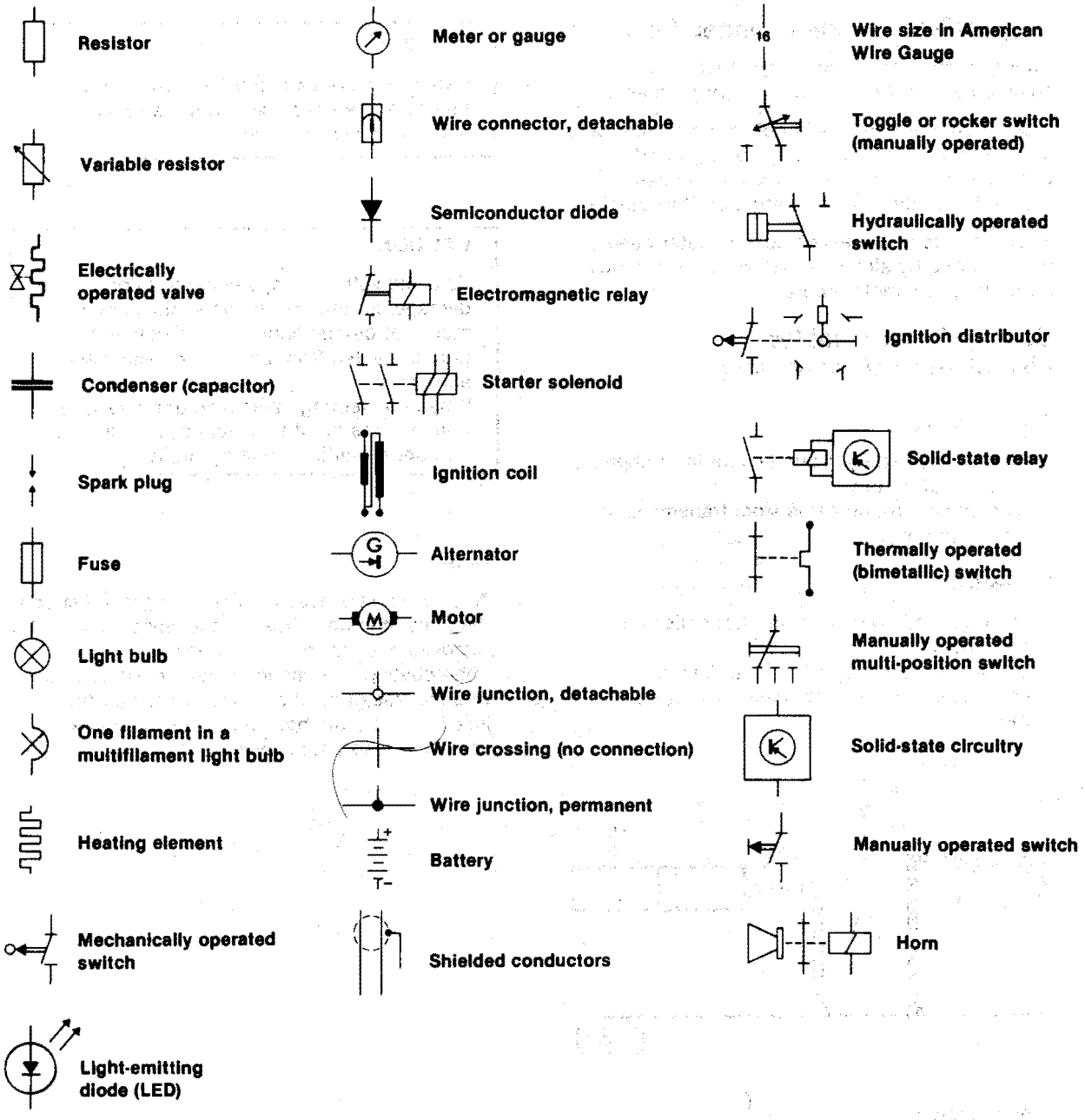

Color Code

Black — BK	Green — G
Brown — BR	Light Green — LT. G
Clear — CL	Blue — BL
Red — R	Violet — V
Yellow — Y	Gray — GY
	White — W

Wire Connector Code

T1 — single	T6 — 6-point
T2 — double	T8 — 8-point
T3 — 3-point	T12 — 12-point
T4 — 4-point	T14 — 14-point

Engine/Body ground connections

Poor ground connections may cause speedometer or brake warning light problems.

If speedometer needle will not return to zero or if brake warning light will not go out, ground connections may be bad or may have been connected to the wrong location on the vehicle.

Poor grounds may weaken speedometer needle return spring by allowing battery current to flow through speedometer cable.

Battery/Ground cables, disconnecting/connecting

Disconnecting

— disconnect battery ground cable from negative terminal of battery
— disconnect ground cable from transmission (not from body)

Connecting

— clean ground connection on transmission to bare metal
— connect ground cable to transmission
— connect ground able to negative terminal of battery

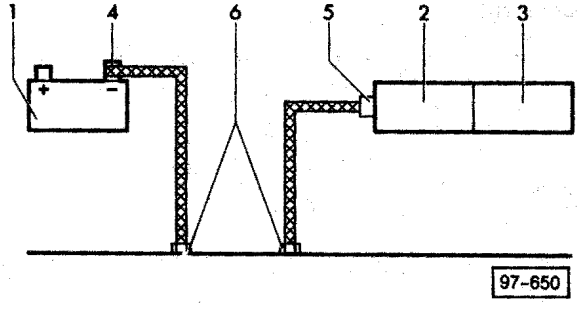

Ground straps

1 = Battery
2 = Transmission
3 = Engine
4 = Negative terminal of battery
5 = Ground point (transmission)
6 = Ground point (body)
• do **not** disconnect

WARNING

Batteries produce explosive gasses. Keep flames and sparks away from batteries. Do not smoke near batteries

CAUTION

To avoid voltage drops and corrosion damage, ground cables on vehicle body must not be disconnected. Disconnect ground cables from battery or transmission ends only.
When connecting cables/ground straps, all connections must be cleaned to bare metal. Be sure mounting bolts are tight.

Note

A special bolt is used to attach the ground strap to the body. If the bolt has been loosened, it must be removed and cleaned free of paint and undercoating. The mounting area must also be cleaned free of paint and undercoating. After installing, coat the bolt and mounting area with corrosion resistant material.

CAUTION

Before working on any part of electrical system, disconnect battery ground strap

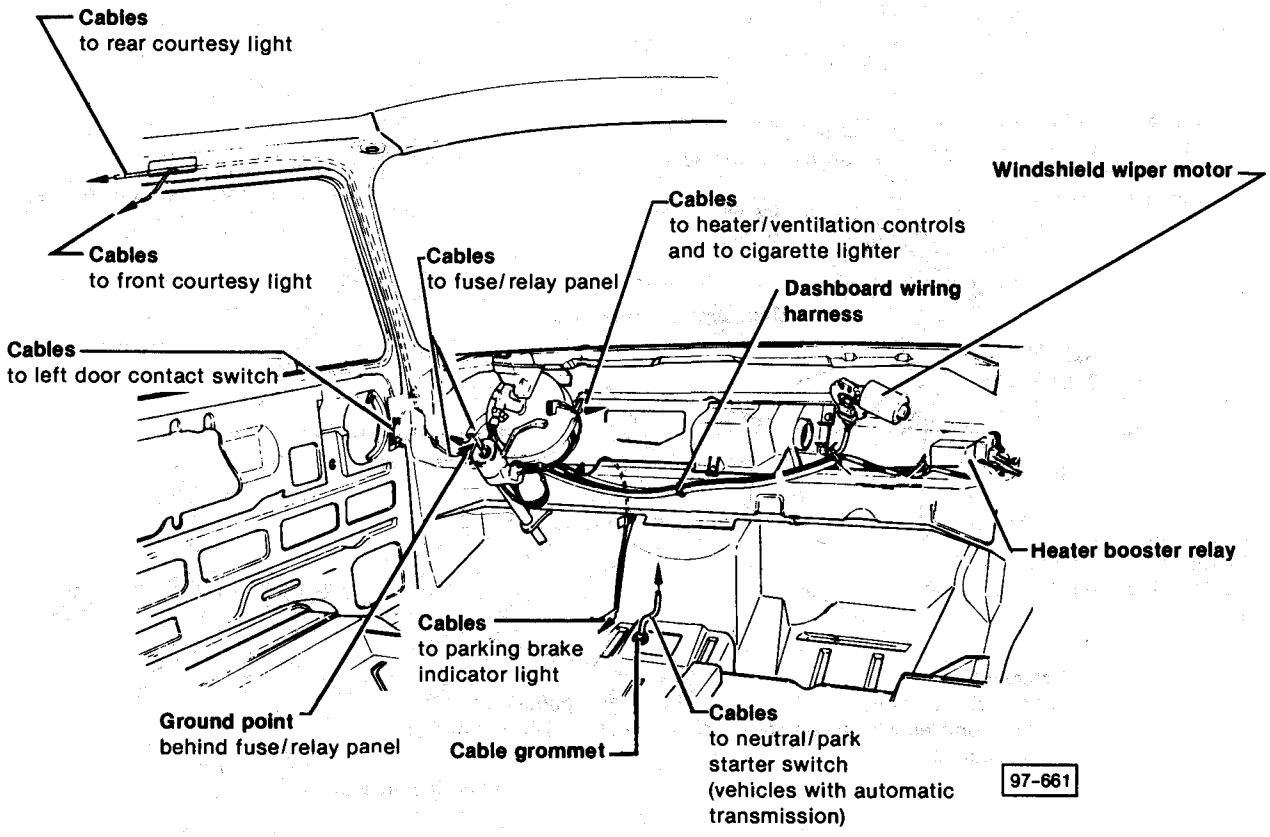

CAUTION

Before working on any part of electrical system, disconnect battery ground strap

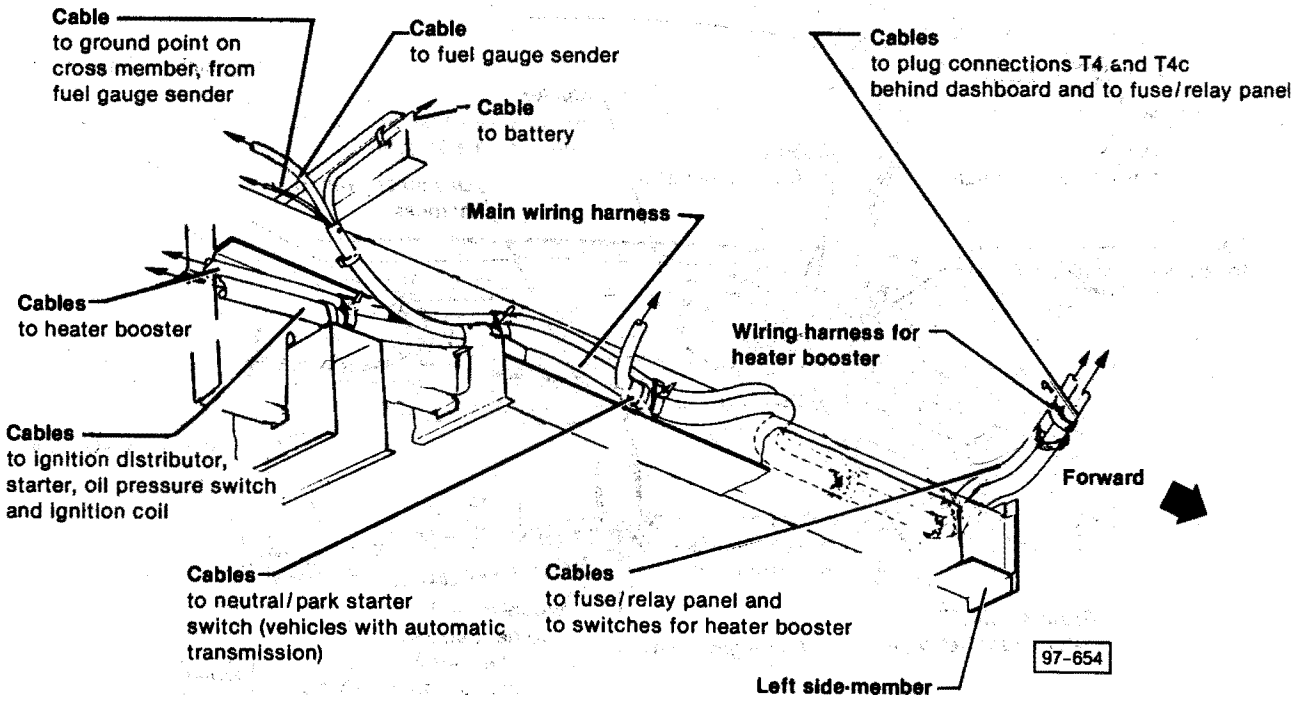

Starter cable routing

CAUTION

Before working on any part of electrical system, disconnect battery ground strap

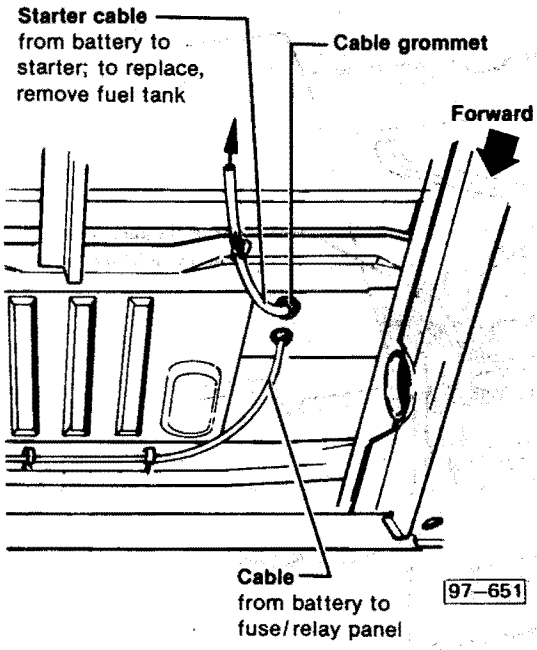

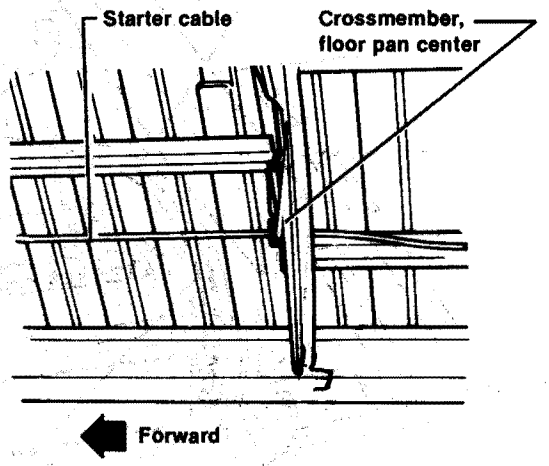

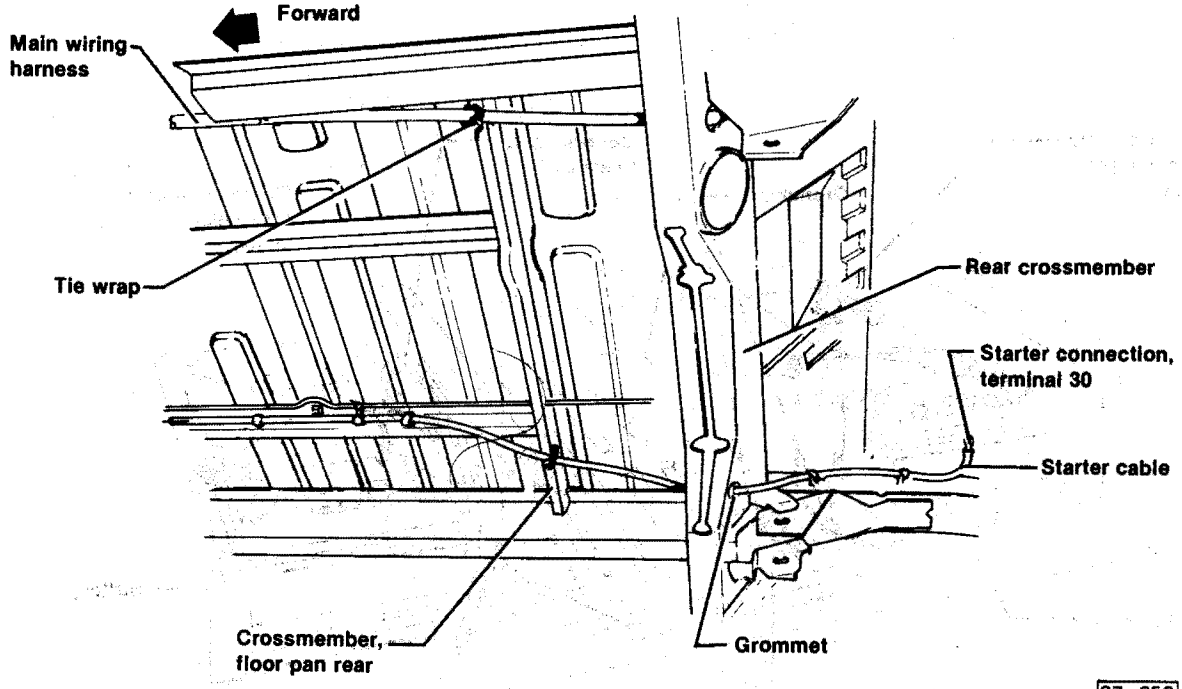

Battery cables, location

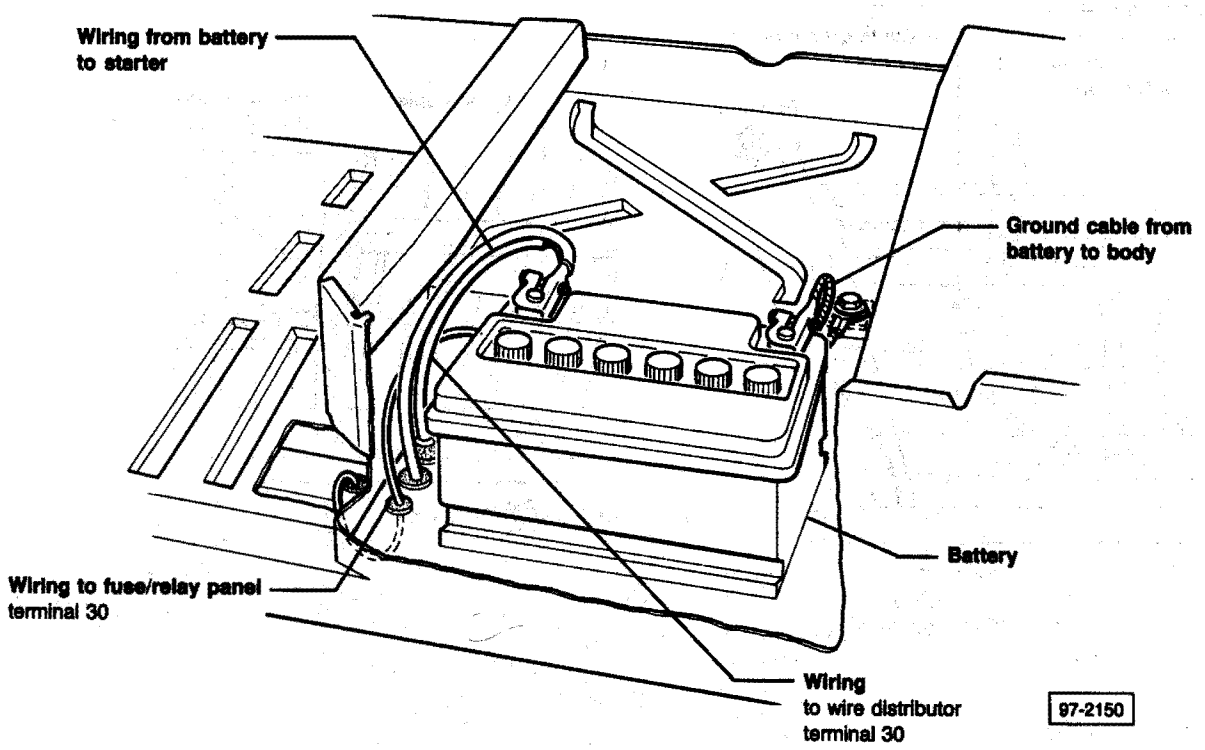

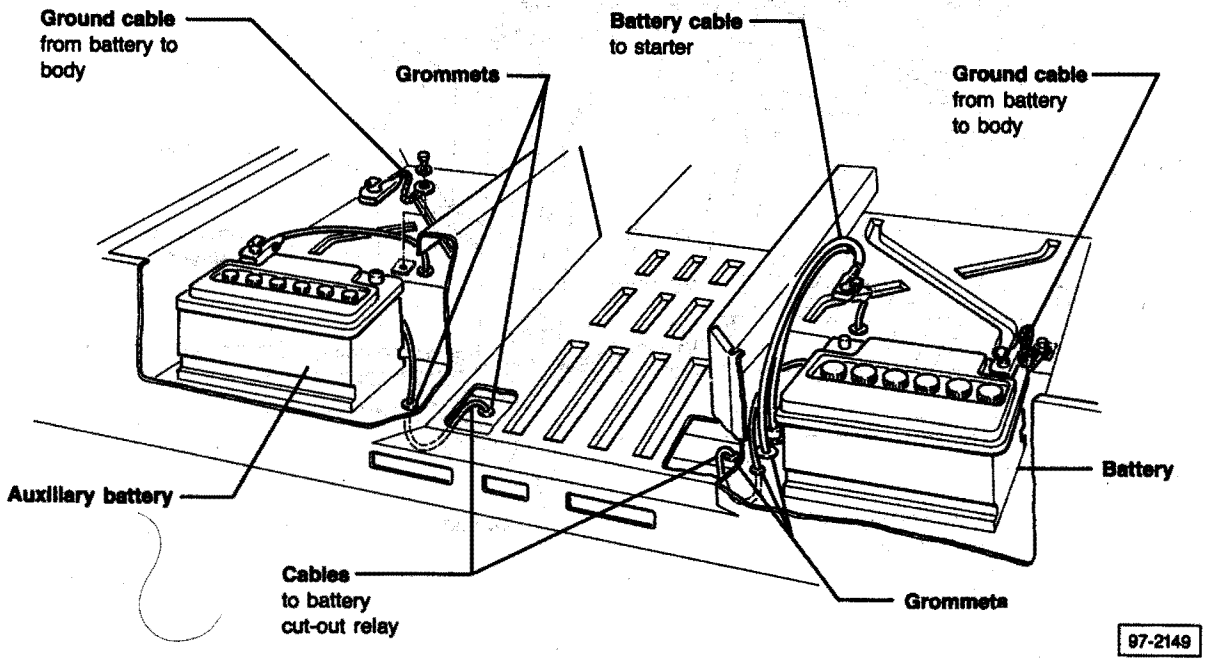

Ground cable from body to automatic transmission

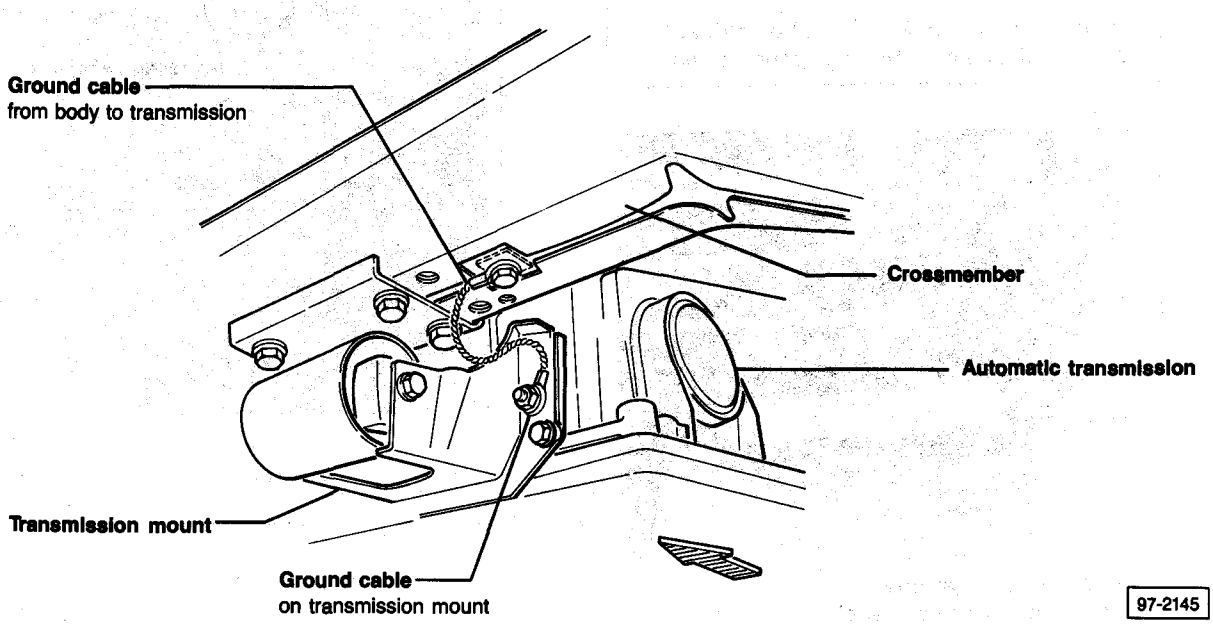

Ground cable from body to manual transmission

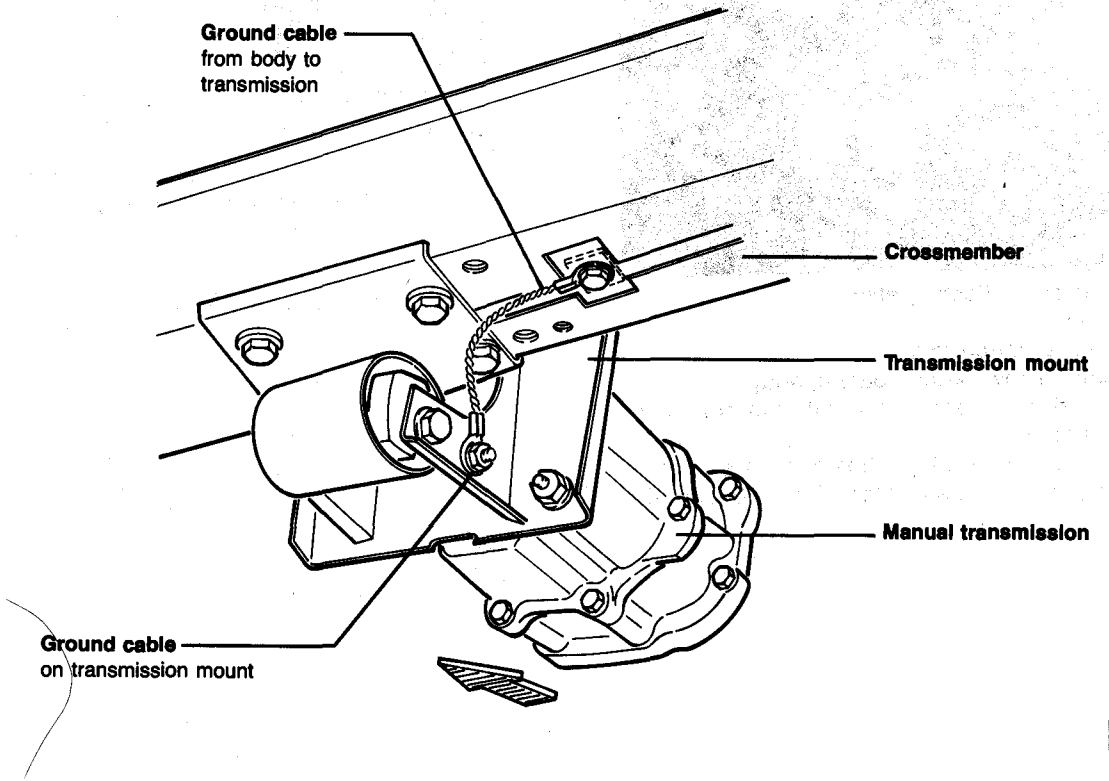

Fuse/relay panel, removing

CAUTION

Before working on any part of electrical system, disconnect battery ground strap

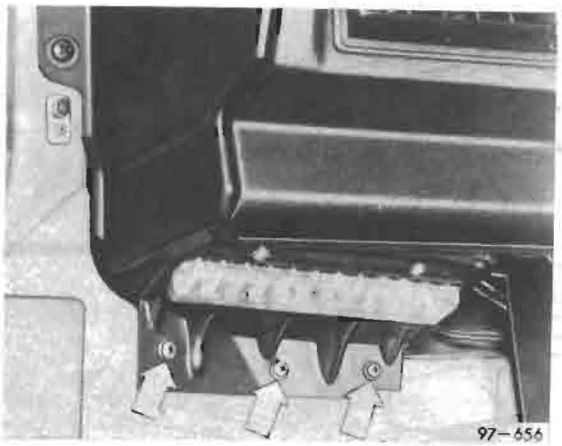

— remove screws (arrows)
— pull down fuse/relay panel

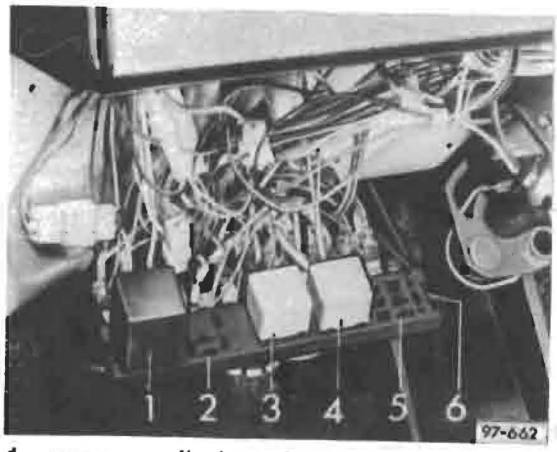

1 = emergency flasher relay
2 = vacant
3 = load reduction relay
4 = ignition key warning buzzer/relay
5 = windshield wiper/washer intermittent relay (optional)
6 = overheat fuse (8A) for heater booster (not shown in illustration), see Repair Group 82

CAUTION

Relay locations are subject to change and may vary from vehicle to vehicle depending on options.

Use extreme care when troubleshooting the electrical system.

If you encounter problems identifying a particular relay, consult your Parts Department.

Fuse/relay panel, removing

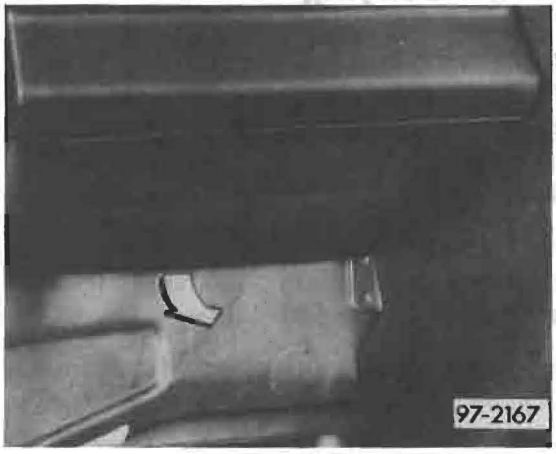

— pull fuse/relay panel cover upward and unhook

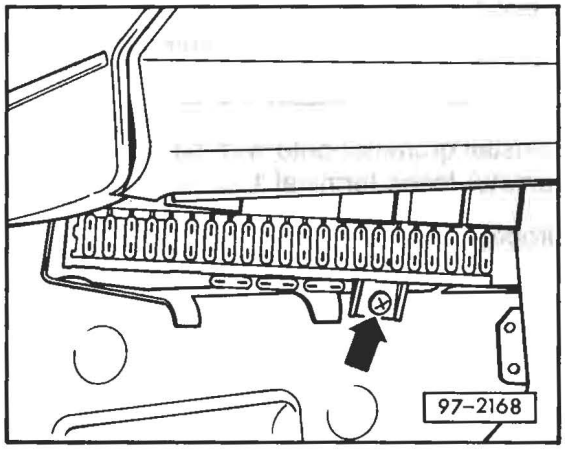

— remove screw (**arrow**)
— unhook fuse/relay panel and pull down

Note

Before working on the electrical system, disconnect battery ground cable.

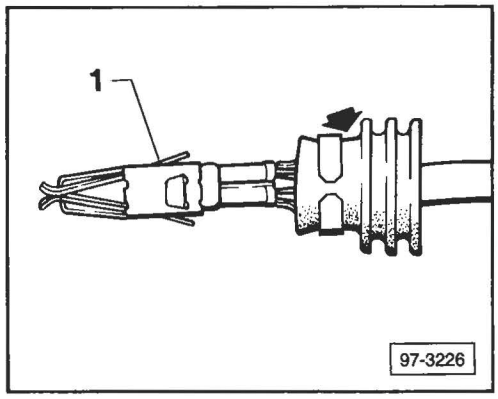

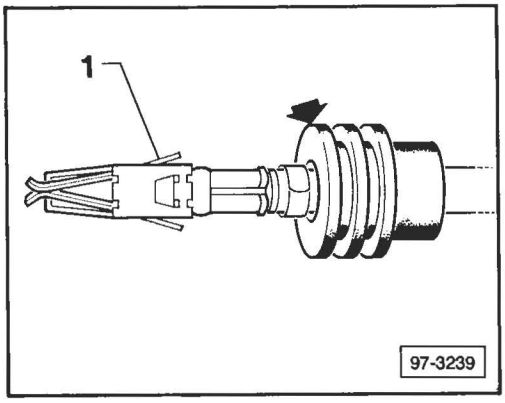

Connector terminal rubber insulating grommet, modifying

A rubber insulating grommet (**arrow**) is installed on some connector terminals at the factory. During wiring repair, the rubber insulating grommet must be reversed before re-inserting into the connector housing.

- remove and discard terminal **1**
- slide rubber insulating grommet from wire and rotate end-to-end (180°)
- inspect grommet and replace if damaged

CAUTION

New replacement grommet must be the same color as original to ensure proper sealing between wire, grommet and housing.

- reinstall grommet onto wire so that collar (**arrow**) faces terminal **1**
- properly crimp new terminal **1** to wire

Electrical System—Wiring, Air-cooled—AFC

Index

General
— Battery/Ground cables 97.9a, 97.9b
disconnecting/connecting 97.6
— Cautions and Warnings 97.2
— Dashboard wiring harness 97.7
— Engine/Body ground connections 97.6
— Fuse/Relay panel, removing (1980-1985) 97.10
(from 1986 m.y.) 97.10a
— How to read wiring diagrams 97.4
— Main wiring harness 97.8
— Starter cable routing 97.9
— Symbols used in wiring diagrams 97.5
— Troubleshooting 97.3
— Working on the electrical system 97.3

1980, 1981 Air-cooled AFC
— Cautions and Warnings 97.2
— Fresh air fan 97.23
— Fuse/Relay panel 97.10
— Heater booster 97.24, 97.25
— Main wiring diagram 97.12-97.17
— Rear window wiper 97.26
— Seat belt interlock system 97.27

1982, 1983 Air-cooled AFC
— Cautions and Warnings 97.2
— Fresh air fan 97.23
— Fuse/Relay panel 97.10
— Heater booster 97.24, 97.25
— Main wiring diagram 97.18-97.22
— Rear window wiper 97.26
— Seat belt interlock system (1982 only) 97.27

Camper
— Refer to 97.29

Diesel
— Refer to 97.35

Waterboxer/Syncro (Water-cooled Digifant, Digijet)
— Refer to 97.53

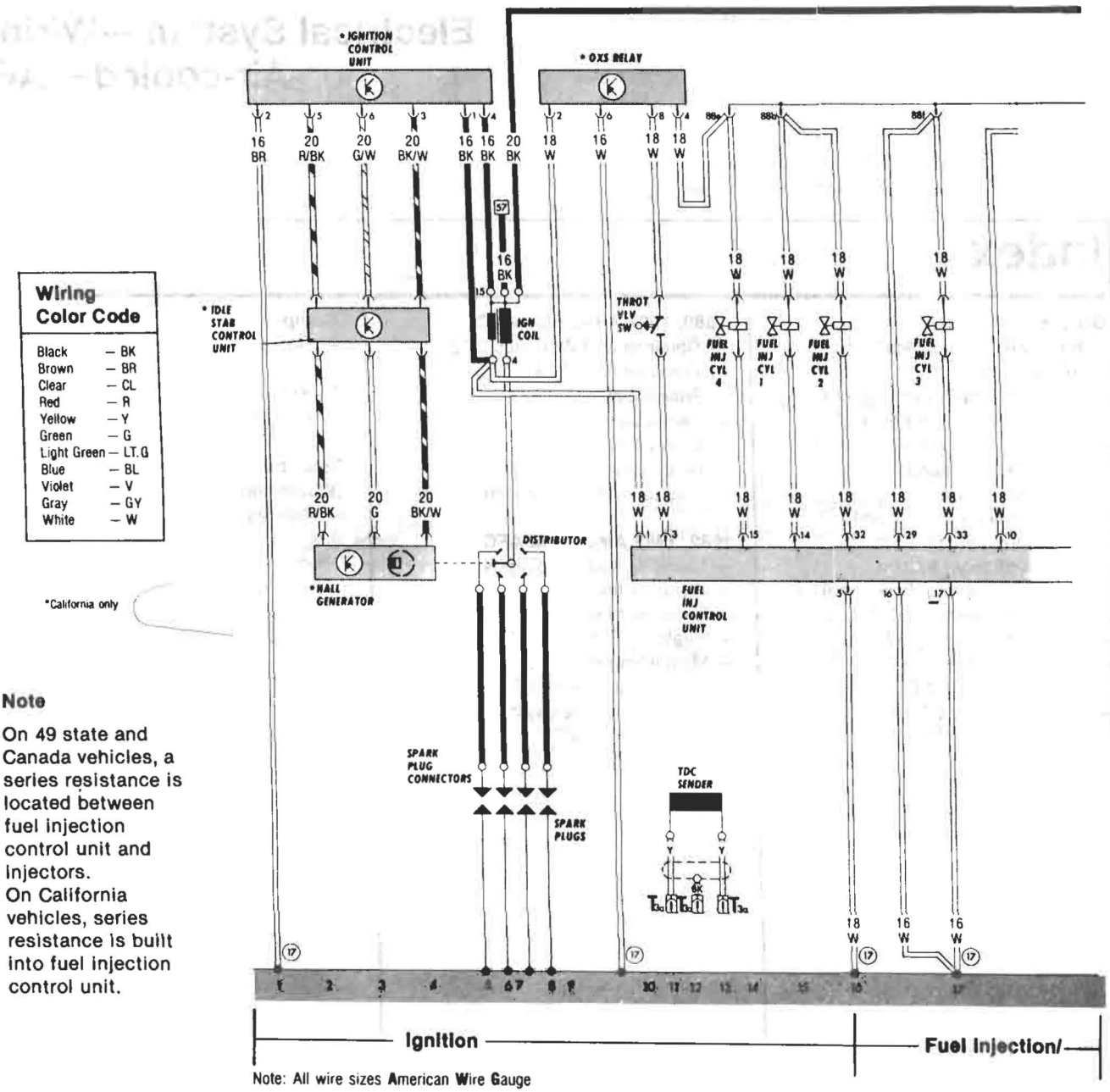

Wiring Color Code

Black	– BK
Brown	– BR
Clear	– CL
Red	– R
Yellow	– Y
Green	– G
Light Green	– LT.G
Blue	– BL
Violet	– V
Gray	– GY
White	– W

*California only

Note

On 49 state and Canada vehicles, a series resistance is located between fuel injection control unit and injectors.
On California vehicles, series resistance is built into fuel injection control unit.

Note: All wire sizes American Wire Gauge

Description	Current Track	Description	Current Track	Description	Current Track
Alternator	31,32	Brake warning light	73-76	Emergency flasher relay	
Alternator charging indicator light	35	Cigarette lighter	71	Emergency flasher switch	
Auxiliary air regulator	22	Cigarette lighter light	70	Fuel gauge	
Back-up light, left	58	Clock	66	Fuel gauge sender	
Back-up light, right	59	Cold start valve	28	Fuel injection control unit	10-22
Back-up light switch	58	Distributor	6-8	Fuel pump	23
Battery	26	Door switch, left front, with buzzer contact	75, 79	Fuel pump relay	19-24
Brake light, left	78	Door switch, right front	80	Fuses S1-S12 on fuse/relay panel (under dash)	
Brake light, right	75	Elapsed mileage switch for OXS indicator*	33, 34	Hall generator*	2-4
Brake light switch	75, 78	Emergency flasher indicator light	67		

*California only

97.12 Main wiring diagram **AFC 1980, 1981**

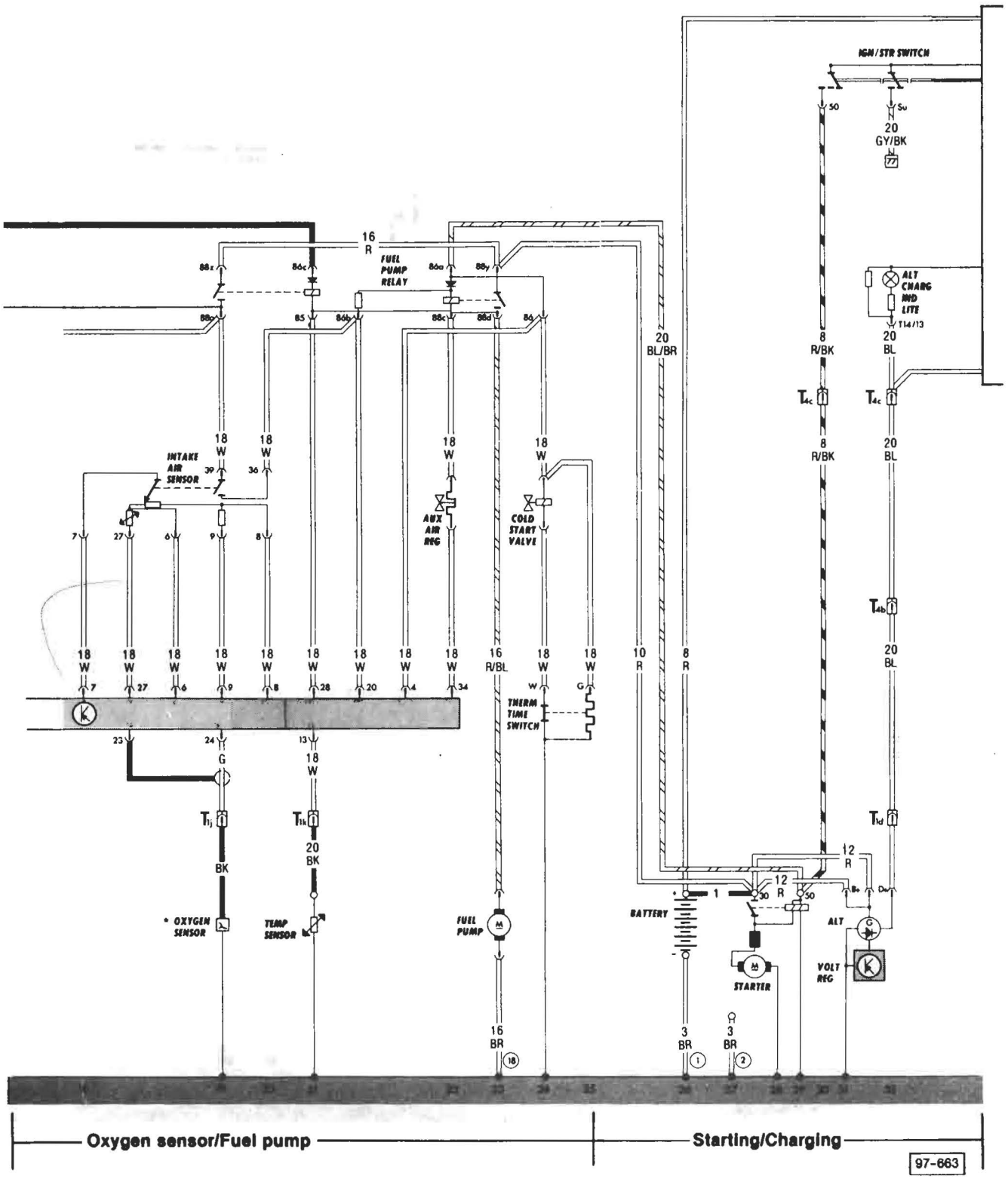

Description	Current Track	Description	Current Track	Description	Current Track
Headlight dimmer switch/flasher		Ignition coil		Intake air sensor	
Headlight, left, high		Ignition control unit*		Interior light, front	
Headlight, left, low		Ignition key warning buzzer		Interior light, rear	
Headlight, right, high		Ignition/starter switch		License plate light	
Headlight, right, low		Injector, cylinder 1		Light switch	
Heater/fresh air controls light		Injector, cylinder 2		Load reduction relay	
High beam indicator light		Injector, cylinder 3		Oil pressure light	
Horn		Injector, cylinder 4		Oil pressure switch	
Horn button		Instrument light dimmer		Oxygen sensor (OXS)*	
Idle stabilizer control unit*		Instrument panel lights		Oxygen sensor (OXS) indicator light*	

*California only

AFC 1980, 1981

Main wiring diagram

97.13

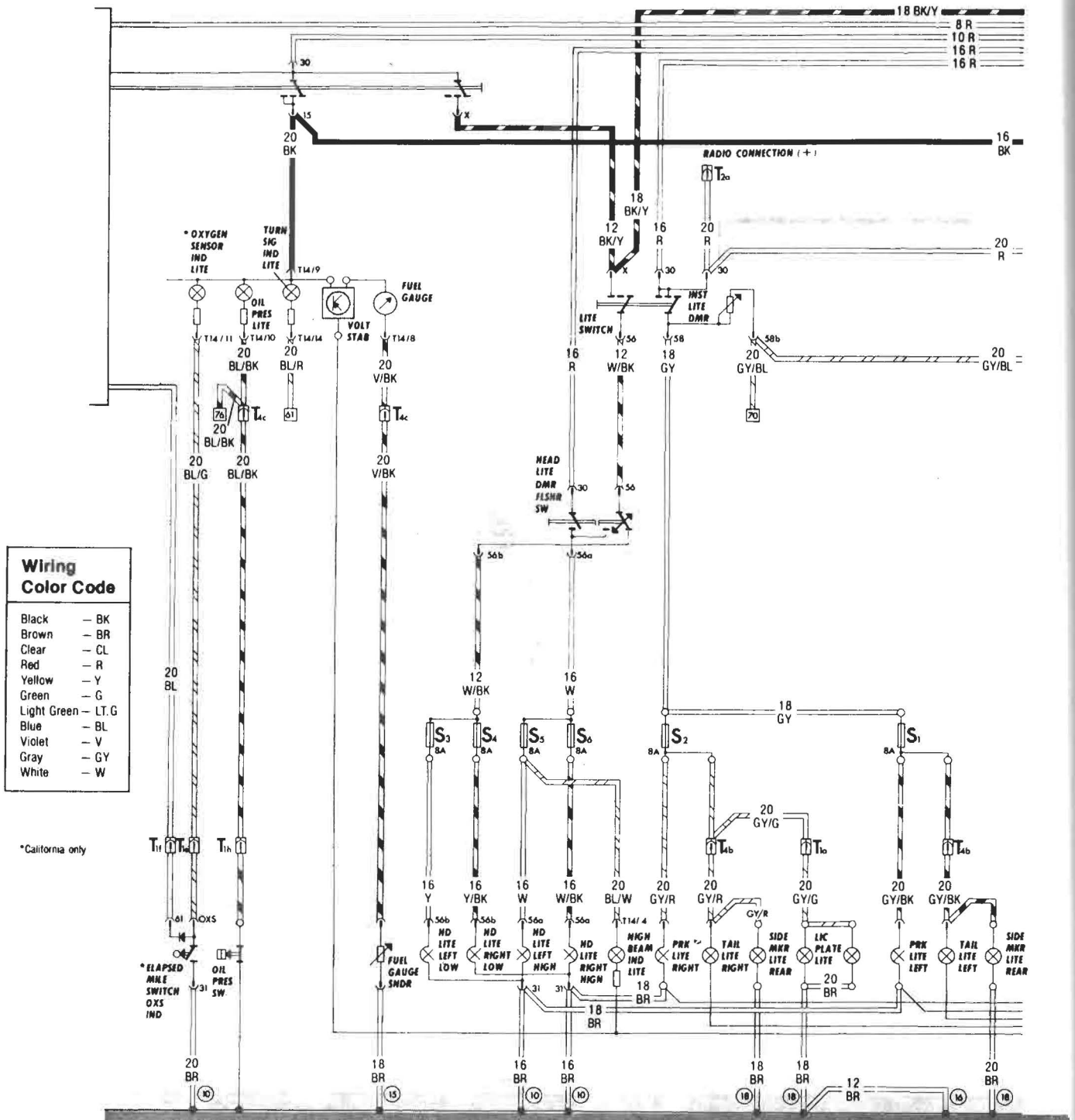

Wiring Color Code

Black	– BK
Brown	– BR
Clear	– CL
Red	– R
Yellow	– Y
Green	– G
Light Green	– LT.G
Blue	– BL
Violet	– V
Gray	– GY
White	– W

*California only

Note: All wire sizes American Wire Gauge

Description	Current Track
Oxygen sensor (OXS) relay*	
Parking brake indicator light switch	
Parking light, left	
Parking light, right	
Radio connection (–)	
Radio connection (+)	
Rear window defogger	
Rear window defogger switch	
Side marker light, left	
Side marker light, right	

*California only

Description	Current Track
Sliding door switch	
Spark plug connectors	
Spark plugs	
Starter	
Tail light, left	
Tail light, right	
TDC sender	
Temperature sensor	
Thermo time switch	
Throttle valve switch	
Turn signal indicator light	

Description	Current Track
Turn signal, left front	
Turn signal, left rear	
Turn signal, right front	
Turn signal, right rear	
Turn signal switch	
Voltage regulator	
Voltage stabilizer	
Windshield washer pump	
Windshield wiper motor	
Windshield wiper switch	
Windshield wiper/washer intermittent relay	

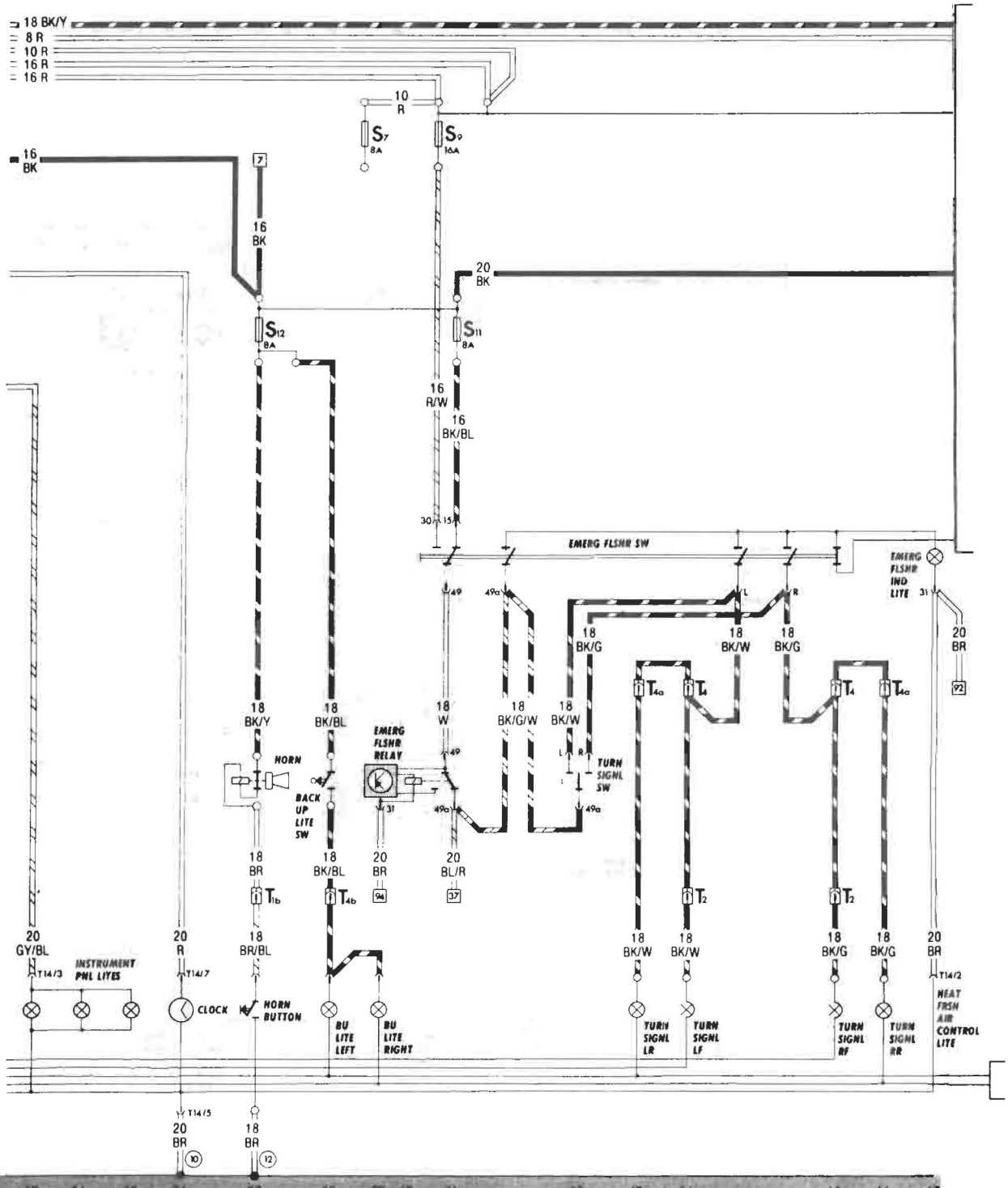

Horn/Emergency flasher/Directional signals

97-664

Description	Current Track	Description	Current Track	Description	Current Track
Alternator	31,32	Brake warning light	73-76	Emergency flasher relay	
Alternator charging indicator light		Cigarette lighter		Emergency flasher switch	
Auxiliary air regulator		Cigarette lighter light		Fuel gauge	
Back-up light, left		Clock		Fuel gauge sender	
Back-up light, right		Cold start valve		Fuel injection control unit	
Back-up light switch		Distributor		Fuel pump	
Battery		Door switch, left front, with buzzer contact	78, 79	Fuel pump relay	
Brake light, left		Door switch, right front		Fuses S1-S12 on fuse/relay panel (under dash)	
Brake light, right		Elapsed mileage switch for OXS indicator*		Hall generator*	
Brake light switch		Emergency flasher indicator light			

*California only

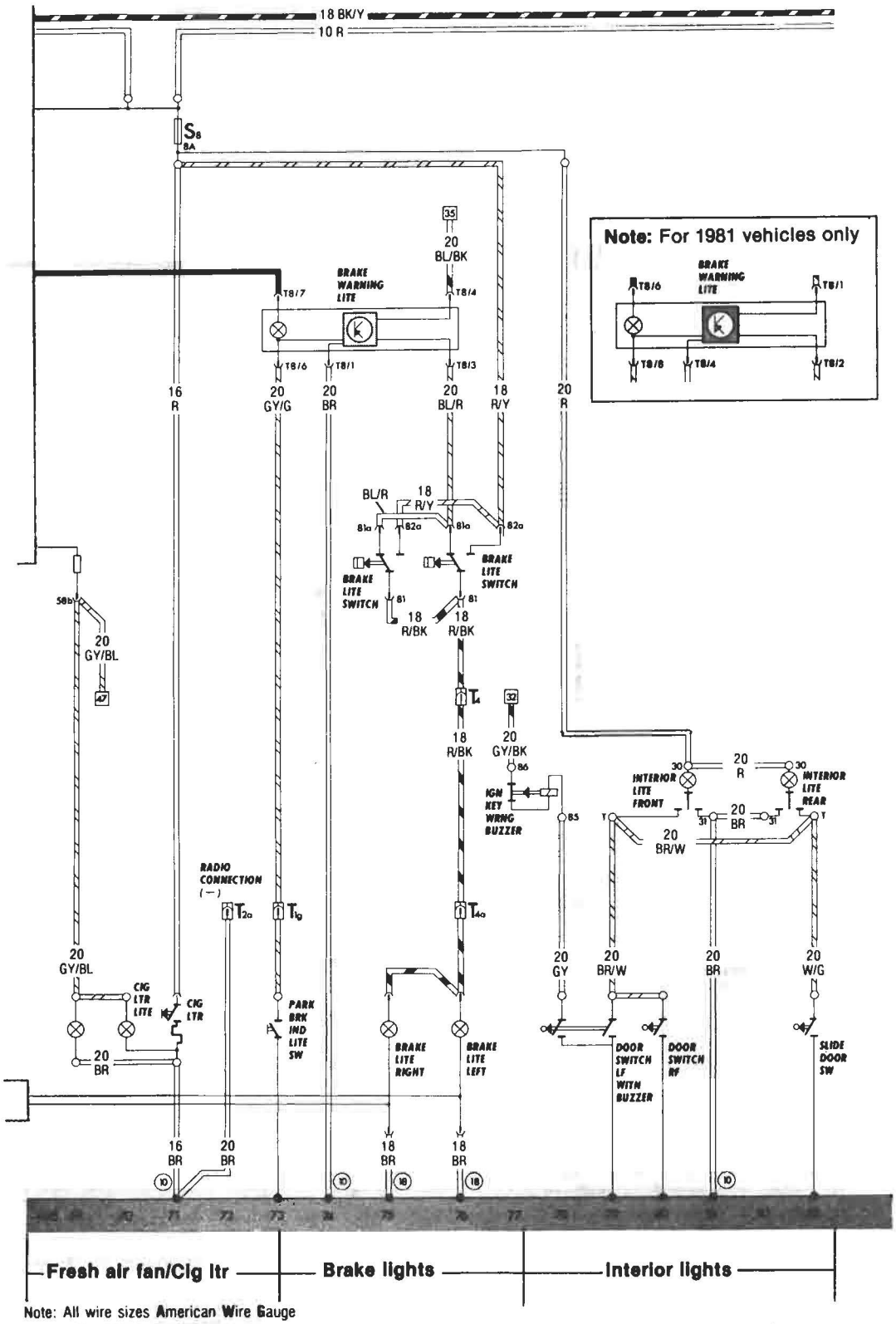

Note: All wire sizes American Wire Gauge

Description	Current Track
Headlight dimmer switch/flasher	
Headlight, left, high	
Headlight, left, low	
Headlight, right, high	
Headlight, right, low	
Heater/fresh air controls light	
High beam indicator light	
Horn	
Horn button	
Idle stabilizer control unit*	
Ignition coil	

Description	Current Track
Ignition control unit*	
Ignition key warning buzzer	
Ignition/starter switch	
Injector, cylinder 1	
Injector, cylinder 2	
Injector, cylinder 3	
Injector, cylinder 4	
Instrument light dimmer	
Instrument panel lights	
Intake air sensor	
Interior light, front	

Description	Current Track
Interior light, rear	
License plate light	
Light switch	
Load reduction relay	
Oil pressure light	
Oil pressure switch	
Oxygen sensor (OXS)*	
Oxygen sensor (OXS) indicator light*	
Oxygen sensor (OXS) relay*	
Parking brake indicator light switch	

*California only

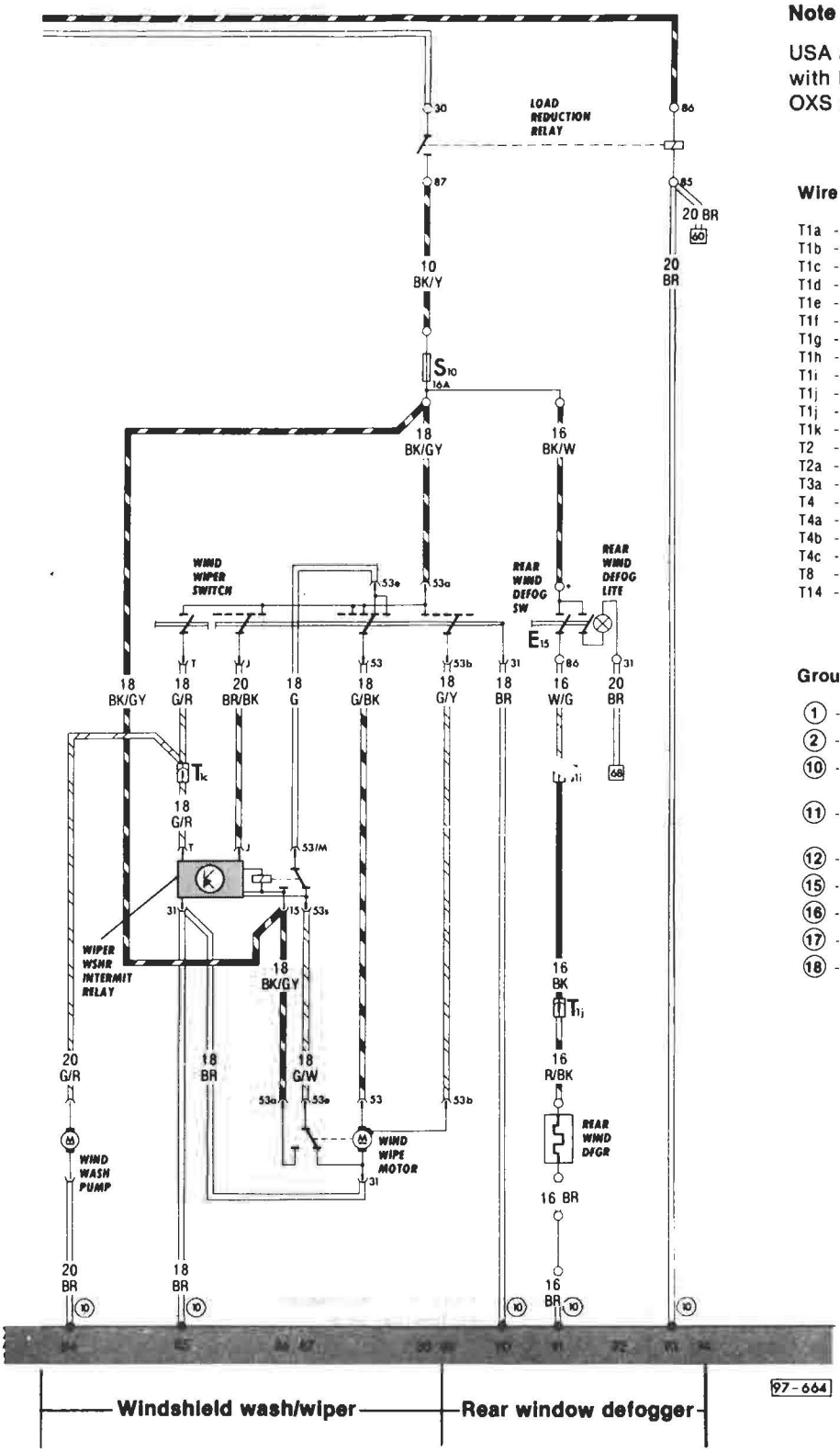

*California only

Note

USA and Canada vehicles are equipped with EGR system instead of OXS system. OXS system is for California only.

Wire Connectors

T1a - at fuse/relay panel
T1b - behind dash
T1c - behind dash
T1d - in engine compart. near alternator
T1e - behind instr. panel
T1f - behind instr. panel
T1g - behind dash
T1h - in engine compart.
T1i - behind dash
T1j - behind dash
T1j - in engine compart.
T1k - in engine compart.
T2 - behind dash
T2a - behind dash
T3a - in engine compart.
T4 - behind dash
T4a - at fuse/relay panel
T4b - at fuse/relay panel
T4c - behind instr. panel
T8 - at brake warning light
T14 - at instr. panel insert

Ground Connectors

(1) - from battery to body
(2) - from transmission to body
(10) - behind instr. panel, to left of fuse/relay panel
(11) - behind instr. panel, to left of fuse/relay panel
(12) - on steering gear
(15) - at left front of crossmember
(16) - near fuse/relay panel
(17) - near ignition distributor
(18) - at fuse/relay panel

Wiring Color Code

Black	– BK
Brown	– BR
Clear	– CL
Red	– R
Yellow	– Y
Green	– G
Light Green	– LT.G
Blue	– BL
Violet	– V
Gray	– GY
White	– W

Description	Current Track
Parking light, left	
Parking light, right	
Radio connection (–)	
Radio connection (+)	
Rear window defogger	
Rear window defogger switch	
Side marker light, left	
Side marker light, right	
Sliding door switch	
Spark plug connectors	

*California only

Description	Current Track
Spark plugs	
Starter	
Tail light, left	
Tail light, right	
TDC sender	
Temperature sensor	
Thermo time switch	
Throttle valve switch	
Turn signal indicator light	
Turn signal, left front	

Description	Current Track
Turn signal, left rear	
Turn signal, right front	
Turn signal, right rear	
Turn signal switch	
Voltage regulator	
Voltage stabilizer	
Windshield washer pump	
Windshield wiper motor	
Windshield wiper switch	
Windshield wiper/washer intermittent relay	

1982-1983 Vanagon

Air-cooled—AFC

Description	Current Track
Alternator	31, 32
Alternator charging indicator light	32
Auxiliary air regular	22
Back-up light, left	58
Back-up light, right	59
Back-up light switch	58
Battery	26
Brake light, left	76
Brake light, right	75
Brake light switch	75, 76
Brake warning light	73-76
Cigarette lighter	71
Cigarette lighter light	70
Clock	56
Cold start valve	24
Distributor	5-8
Door switch, left front, with buzzer contact	78, 79
Door switch, right front	80
Elapsed mileage switch for OXS indicator	33, 34
Emergency flasher indicator light	67
Emergency flasher relay	59-61
Emergency flasher switch	61-69
Fuel gauge	39
Fuel gauge sender	39
Fuel pump	23
Fuel pump relay	19-24
Fuses S1-S12 on fuse/relay panel (under dash)	
Hall generator	2-4
Headlight dimmer switch/flasher	43, 44
Headlight, left, high	42
Headlight, left, low	40
Headlight, right, high	43
Headlight, right, low	41
Heater/fresh air controls light	69
High beam indicator light	44
Horn	57
Horn button	57
Idle stabilizer control unit	2-4
Ignition coil	7
Ignition control unit	1-6
Ignition key warning buzzer	77, 78
Ignition/starter switch	30-40
Injector, cylinder 1	15
Injector, cylinder 2	16
Injector, cylinder 3	17
Injector, cylinder 4	14
Instrument light dimmer	48
Instrument panel lights	53-55
Intake air sensor	18-20
Interior light, front	79-81
Interior light, rear	82, 83
License plate light	48, 49
Light switch	44-47
Load reduction relay	88-93
Oil pressure light	36
Oil pressure switch	36
Oxygen sensor (OXS)	19
Oxygen sensor (OXS) indicator light	34
Oxygen sensor (OXS) relay	9-12
Parking brake indicator light switch	73
Parking light, left	50
Parking light, right	45
Radio connection (−)	72
Radio connection (+)	46
Rear window defogger	91
Rear window defogger switch	91, 92

Description	Current Track
Side marker light, left	52
Side marker light, right	47
Sliding door switch	83
Spark plug connector	5-8
Spark plugs	5-8
Starter	28, 29
Tail light, left	51
Tail light, right	48
TDC sender	11-13
Temperature sensor	21
Thermo time switch	24, 25
Throttle valve switch	11
Turn signal indicator light	37
Turn signal, left front	64
Turn signal, left rear	63
Turn signal, right front	65
Turn signal, right rear	66
Turn signal switch	62
Voltage regulator	31
Voltage stabilizer	38
Windshield washer pump	84
Windshield wiper motor	86-89
Windshield wiper switch	85-90
Windshield wiper/washer intermittent relay	85-87

Wire Connectors

T1a — at fuse/relay panel
T1b — behind dash
T1c — behind dash
T1d — in engine compart, near alternator
T1e — behind instr. panel
T1f — behind instr. panel
T1g — behind dash
T1h — in engine compart.
T1i — behind dash
T1j — behind dash
T1j — in engine compart.
T1k — in engine compart.
T2 — behind dash
T2a — behind dash
T3a — in engine compart
T4 — behind dash
T4a — at fuse/relay panel
T4b — at fuse/relay panel
T4c — behind instr. panel
T8 — at brake warning light
T14 — at instr. panel insert

Ground Connectors

1 — from battery to body
2 — from transmission to body
10 — behind instr. panel to left of fuse/relay panel
11 — behind instr. panel to left of fuse/relay panel
12 — on steering gear
15 — at left front of crossmember
16 — near fuse/relay panel
17 — near ignition distributor
18 — at fuse/relay panel

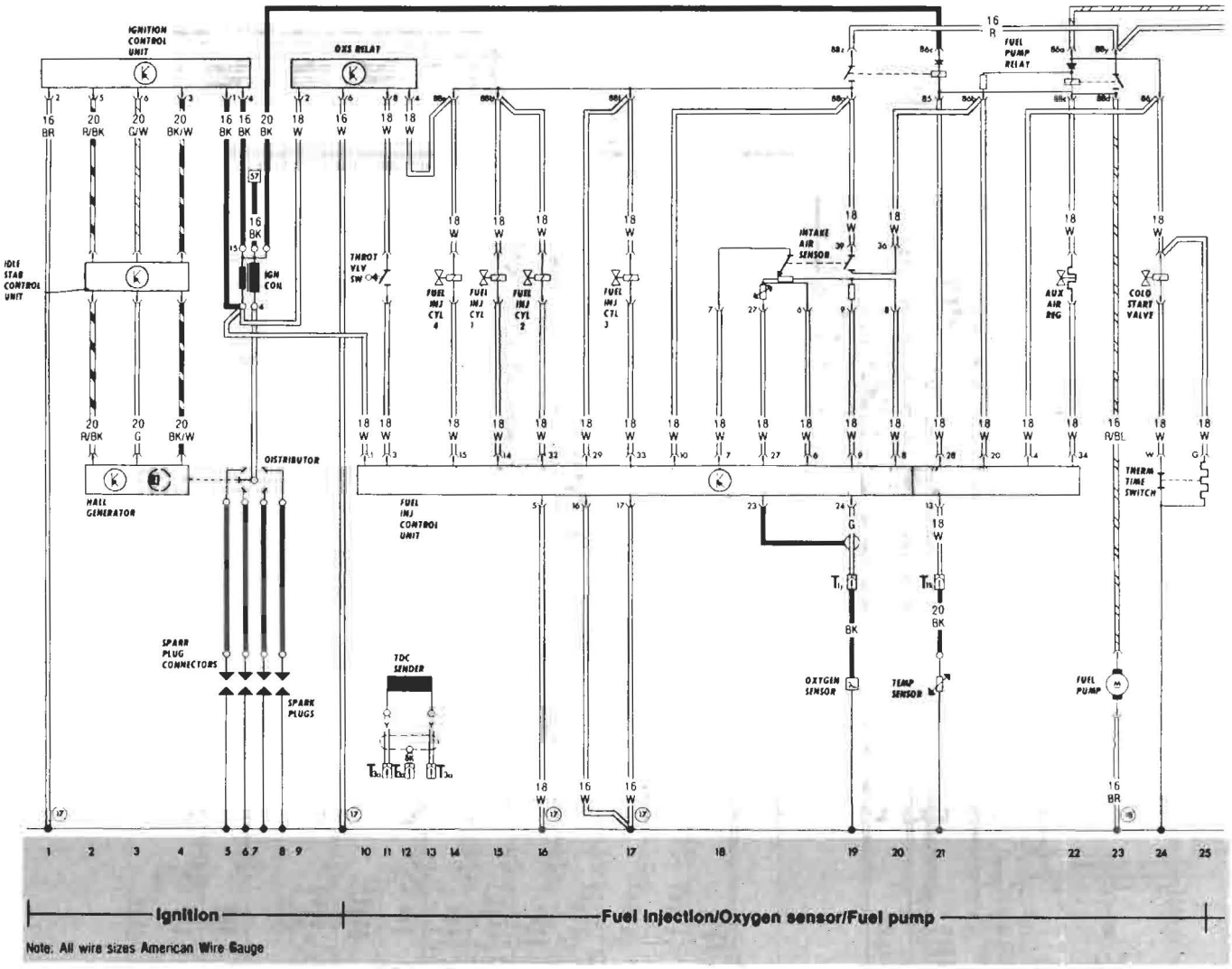

Note: All wire sizes American Wire Gauge

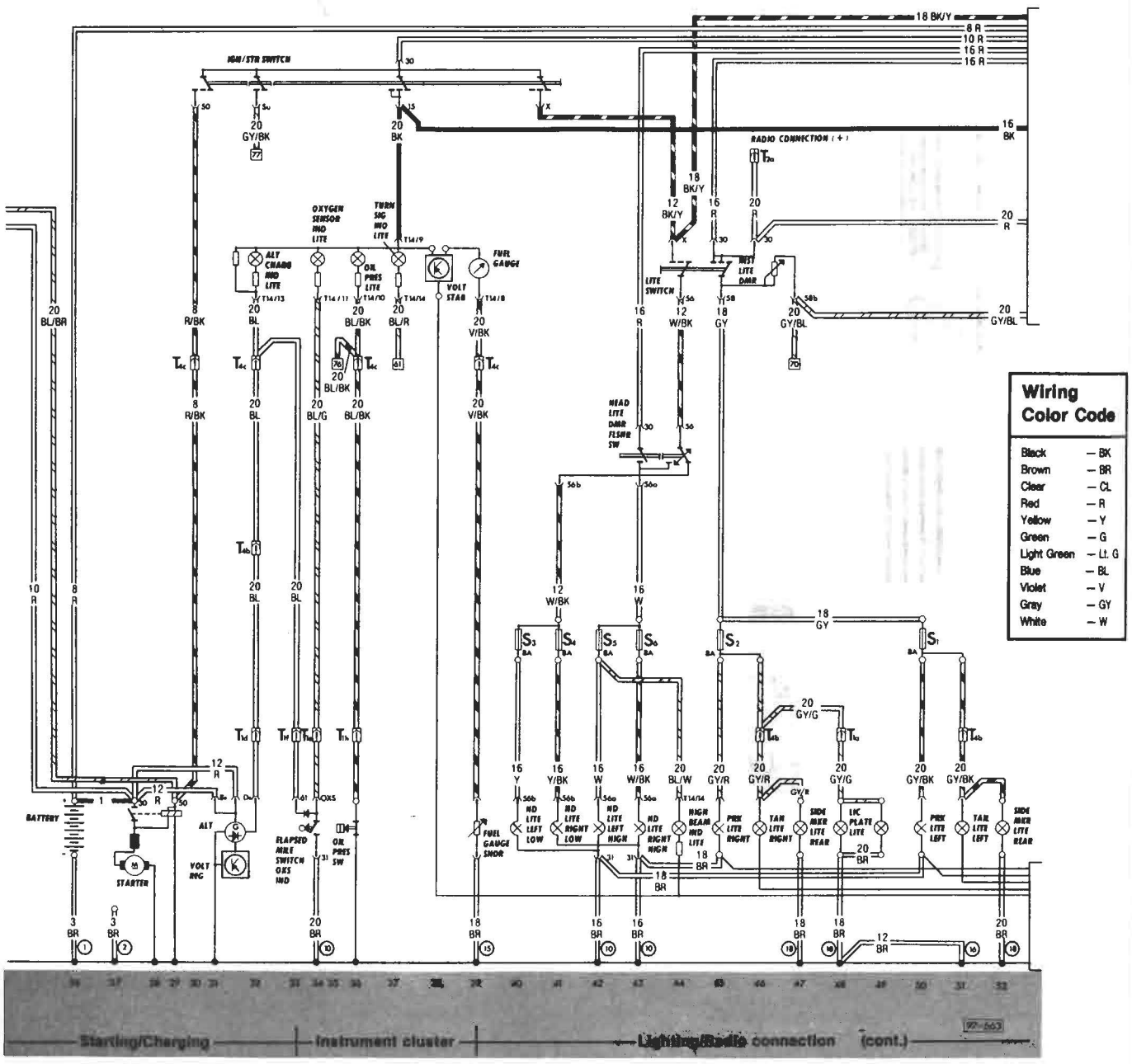
Wiring Color Code
Black — BK
Brown — BR
Clear — CL
Red — R
Yellow — Y
Green — G
Light Green — Lt. G
Blue — BL
Violet — V
Gray — GY
White — W
Starting/Charging
Instrument cluster
(cont.)

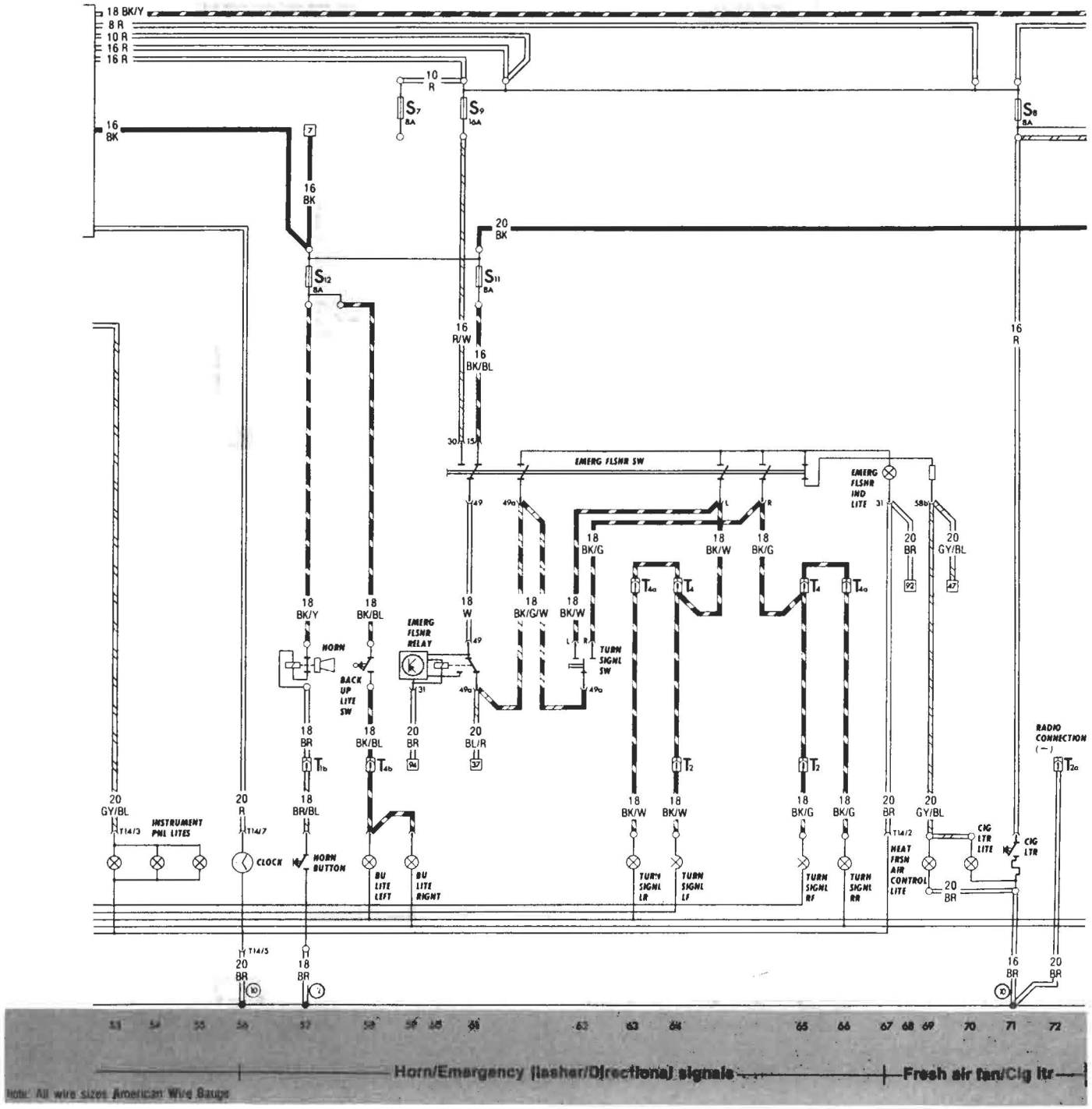
18 BK/Y
8 R
10 R
16 R
16 R
16 BK
16 BK
20 BK
16 R/W
16 BK/BL
16 R
EMERG FLSHR SW
EMERG FLSHR IND LITE
HORN
BACK UP LITE SW
EMERG FLSHR RELAY
TURN SIGNL SW
RADIO CONNECTION (−)
INSTRUMENT PNL LITES
CLOCK
HORN BUTTON
BU LITE LEFT
BU LITE RIGHT
TURN SIGNL LR
TURN SIGNL LF
TURN SIGNL RF
TURN SIGNL RR
HEAT FRSH AIR CONTROL LITE
CIG LTR LITE
CIG LTR
Horn/Emergency flasher/Directional signals
Fresh air fan/Cig ltr
Note: All wire sizes American Wire Gauge

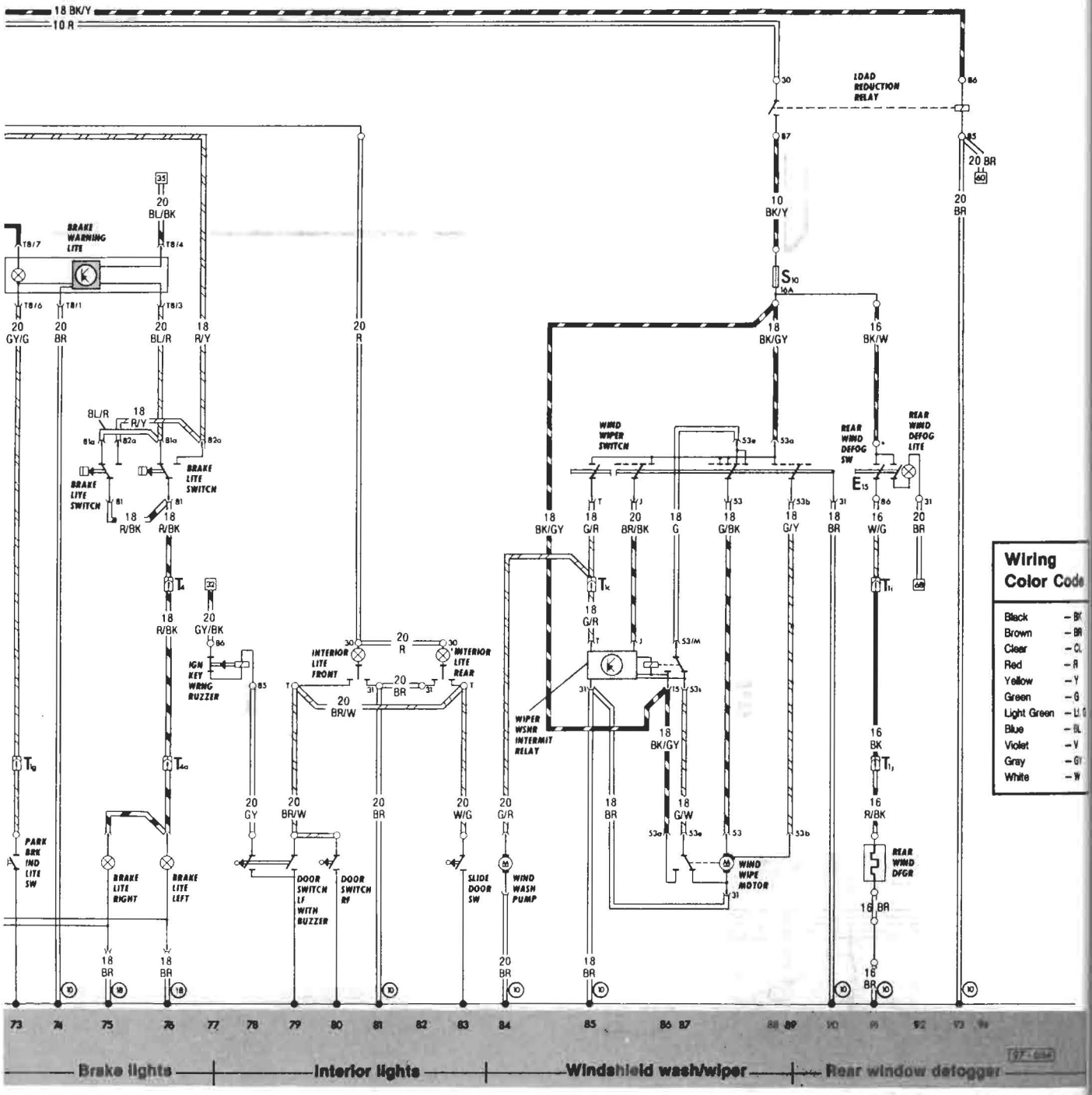

Wiring Color Code

Black	– BK
Brown	– BR
Clear	– CL
Red	– R
Yellow	– Y
Green	– G
Light Green	– LG
Blue	– BL
Violet	– V
Gray	– GY
White	– W

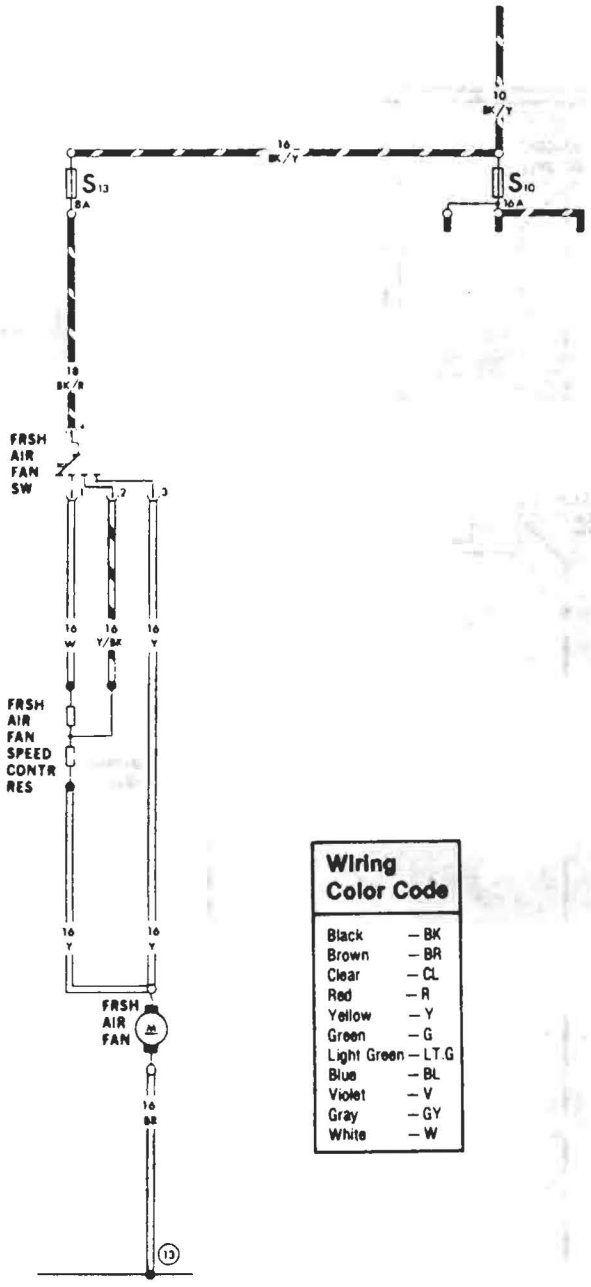

Wiring Color Code	
Black	– BK
Brown	– BR
Clear	– CL
Red	– R
Yellow	– Y
Green	– G
Light Green	– LT.G
Blue	– BL
Violet	– V
Gray	– GY
White	– W

Ground Connector
⑬ behind dash

NOTE: All wire sizes American Wire Gauge

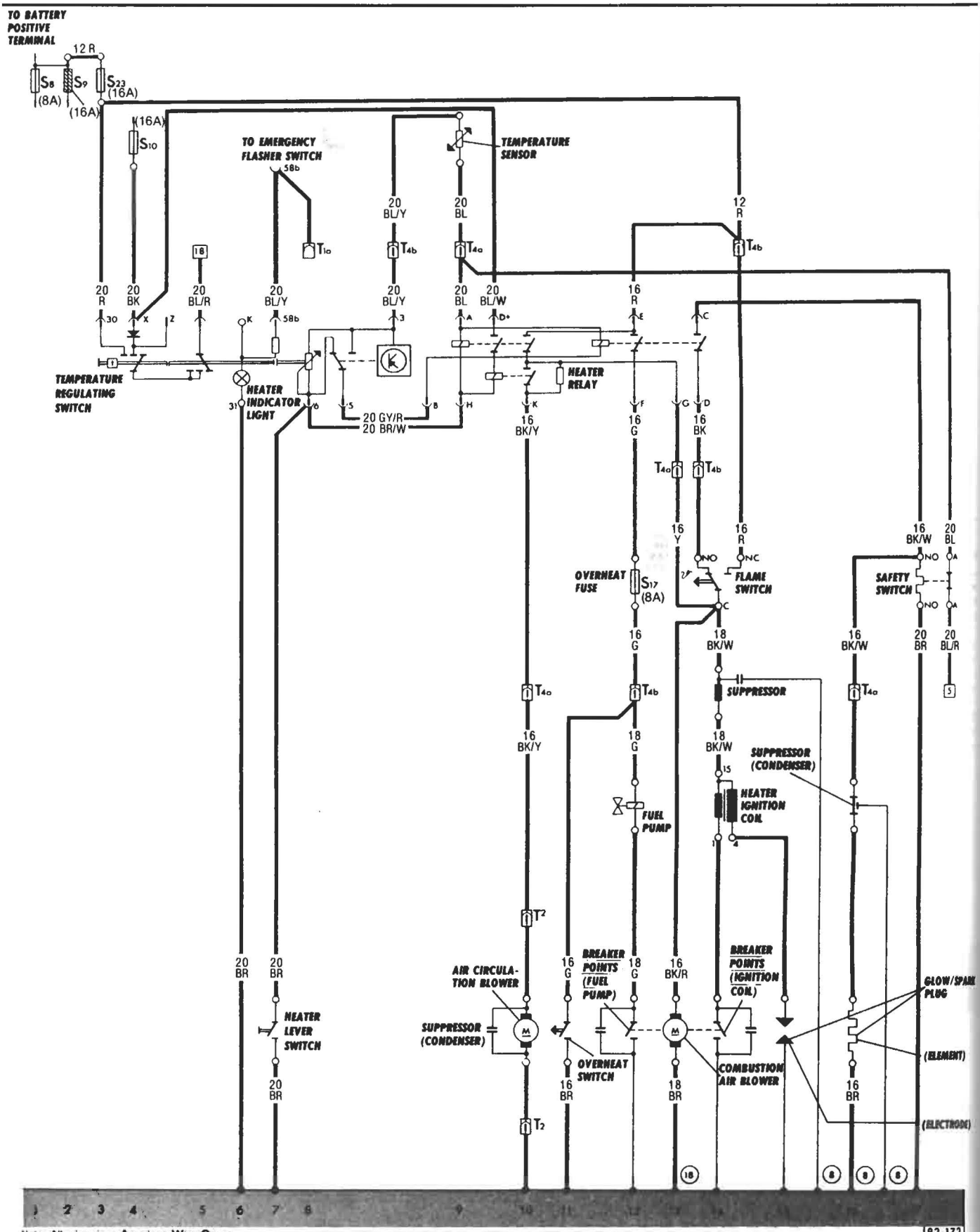

Note: All wire sizes American Wire Gauge

Description	Current Track
Air circulation blower	10
Breaker points for fuel pump	12
Breaker points for ignition coil	14
Combustion air blower	13
(to) Emergency flasher switch, term. 58b	7
Flame switch	14
Fuel pump	1, 3
Glow/spark plug—element	16
Glow/spark plug—electrode	15
Heater indicator light	6
Heater lever switch	7
Heater relay	9–14
Ignition coil	14
Ignition/starter switch	9
Main fuse S23	3
Overheat fuse S17	12
Overheat switch	11
Safety switch	17, 18
Suppressor for air circulation blower	10
Suppressor for glow/spark plug	16
Suppressor for ignition coil	14, 15
Temperature regulating switch	1–8
Temperature sensor	9
Wire connectors	
T1a—at fuse holder	7
T2 —at air circulation blower	10
T4a—at heater	9,10,13,16
T4b—at heater	8,12,13,14

(8)—ground connector, at heater

(18)—ground connector, at combustion air blower

Wiring Color Code	
Black	—BK
Brown	—BR
Clear	—CL
Red	—R
Yellow	—Y
Green	—G
Light Green	—LT.G
Blue	—BL
Violet	—V
Gray	—GY
White	—W

CAUTION

Before working on any part of electrical system, disconnect battery ground strap

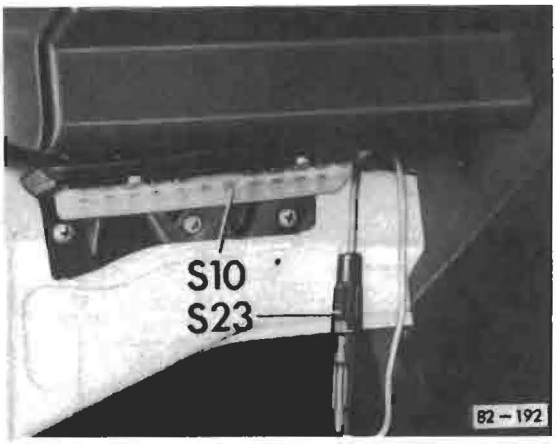

S10 = Fuse in fuse/relay panel (16A)
S23 = Main fuse, in-line (16A)

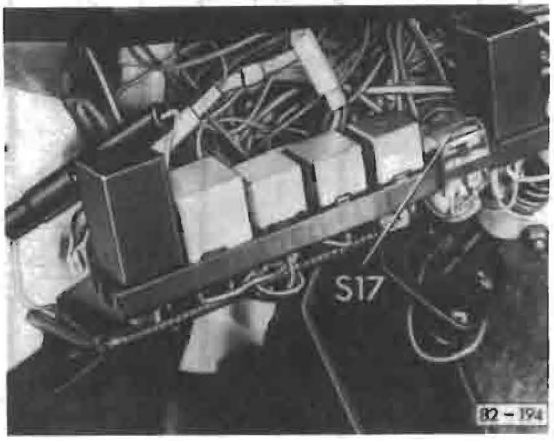

S17 = Overheat fuse (8A)

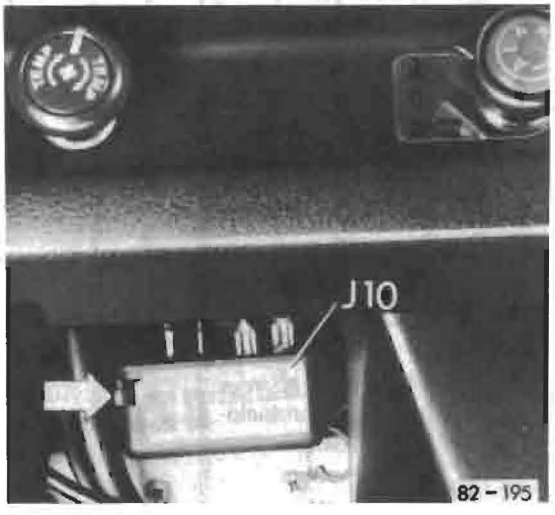

J10 = Safety switch

Note

To reset switch, wait three minutes and then press reset lever in direction of arrow

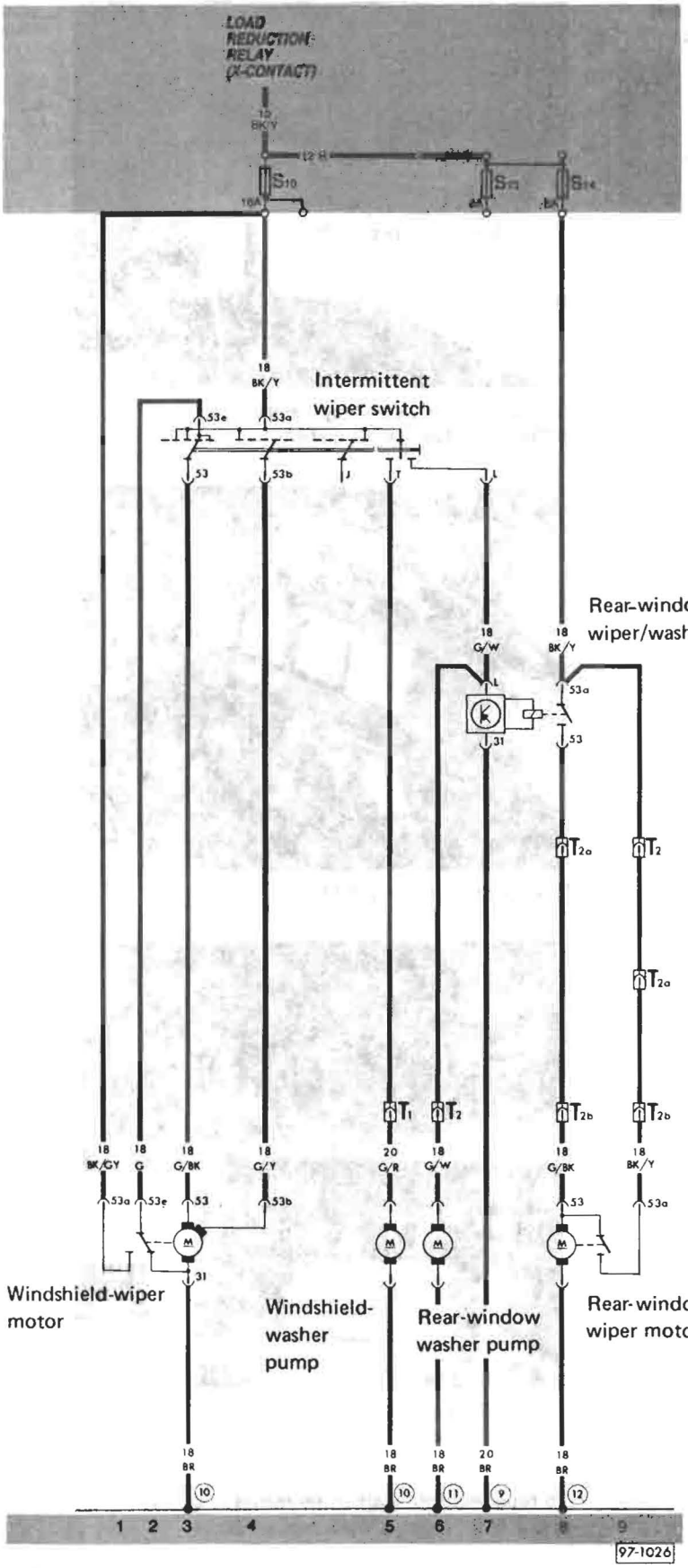

Wire Connectors

T1 — single, behind dash
T2 — double, behind dash, right
T2a — double, on roof, rear, right
T2b — double, on rear window-wiper motor

Ground Connectors

9 — behind dash, right
10 — near fuse panel
11 — near rear washer-fluid container, right
12 — on rear lid, near rear window-wiper motor

Wiring Color Code

Black	— BK
Brown	— BR
Clear	— CL
Red	— R
Yellow	— Y
Green	— G
Light Green	— Lt. G
Blue	— BL
Violet	— V
Gray	— GY
White	— W

Wire connectors		Current Track
T1c	single, behind dash	3
T2a	double, under driver's seat	4
T3	3-point, behind dash	4, 6
T4	4-point, behind dash	8
T4a	4-point, in engine compartment	8

Wiring Color Code	
Black	– BK
Brown	– BR
Clear	– CL
Red	– R
Yellow	– Y
Green	– G
Light Green	– LT.G
Blue	– BL
Violet	– V
Gray	– GY
White	– W

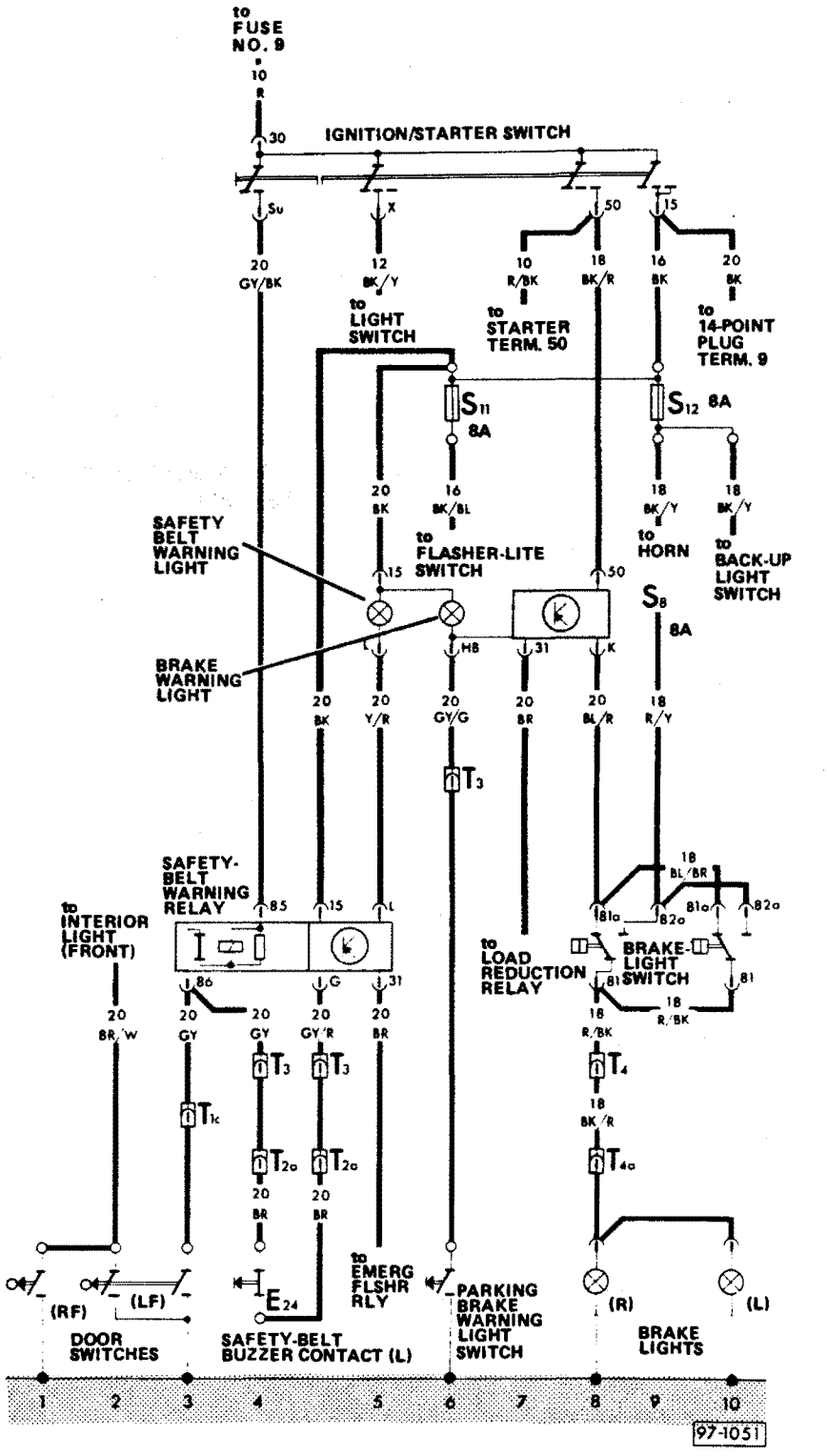

THIS PAGE INTENTIONALLY
LEFT BLANK

Electrical System—Wiring, Camper

Index

General
— Battery/Ground cables 97.9a, 97.9b
disconnecting/connecting 97.6
— Cautions and Warnings 97.2
— Dashboard wiring harness 97.7
— Engine/Body ground connections 97.6
— Fuse/Relay panel, removing (1980-1985) 97.10
(from 1986 m.y.) 97.10a
— How to read wiring diagrams 97.4
— Main wiring harness 97.8
— Starter cable routing 97.9
— Symbols used in wiring diagrams 97.5
— Troubleshooting 97.3
— Working on the electrical system 97.3

Camper
— Auxiliary battery
1986-1989 (man. trans.) 97.34
(also see 97.53)
— Battery level indicator lights 97.30
— Camper electrical equipment
1980-1985 97.32
from 1986 97.33
— Water pump 97.31
— Water tank level indicator lights 97.30

Air-cooled AFC
— Refer to 97.11

Diesel
— Refer to 97.35

Waterboxer/Syncro (Water-cooled Digifant, Digijet)
— Refer to 97.53

Battery level indicator lights, checking

Note

Ignore indicator lights which light but are not mentioned in test being performed

— check indicator light panel fuse located under driver's seat
— remove indicator light panel from sink cabinet and disconnect multi-point connector

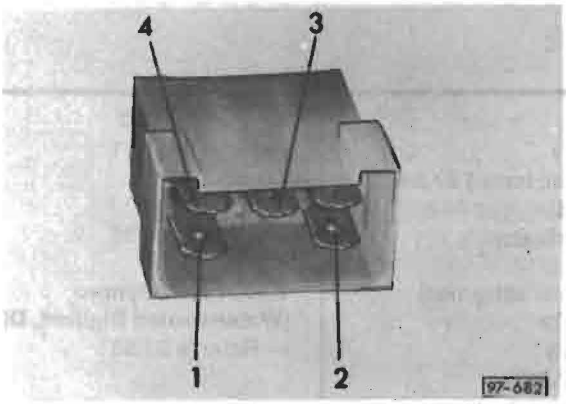

— connect indicator light panel to fully charged 12-volt battery as follows:
- terminal **1** to battery positive terminal
- terminal **2** to battery negative terminal

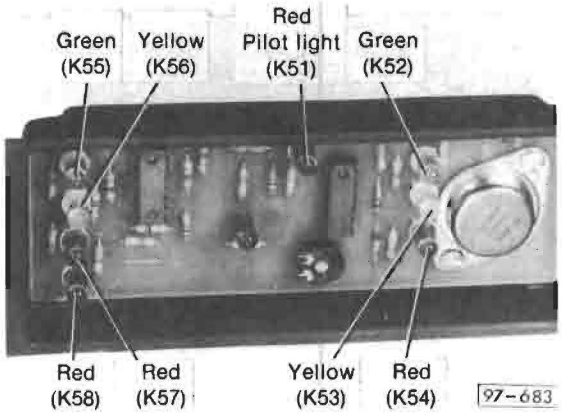

— red pilot light(K51) and green battery level indicator light(K52) will light—battery level above 12.5 volts
— using Sun VAT-40 or equivalent, load battery to maximum 110 A. Battery voltage will start to drop
— battery level indicator lights will light in the following sequence:
- green(K52)—battery level above 12.5 volts
- yellow(K53)—battery level below 12.5 volts
- red(K54)—battery level above 12 volts

— if any indicator light does not light during test, indicator light panel is defective
— replace complete indicator light panel if necessary
— if indicator light panel **OK**, check wiring

Water tank level indicator lights, checking

Note

Ignore indicator lights which light but are not mentioned in test being performed

— check indicator light panel fuse located under driver's seat
— remove indicator light panel from sink cabinet and disconnect multi-point connector

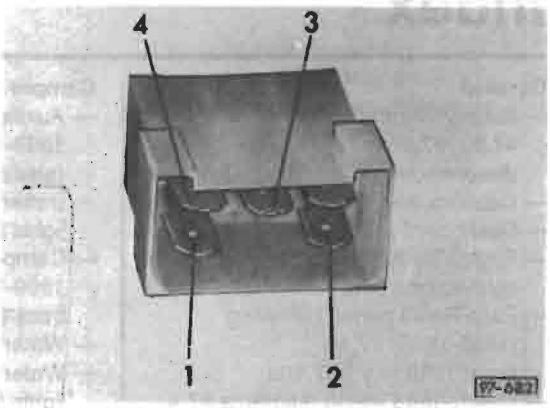

— connect indicator light panel to fully charged 12-volt battery as follows:
- terminal **1** to battery postive terminal
- terminal **2** to battery negative terminal

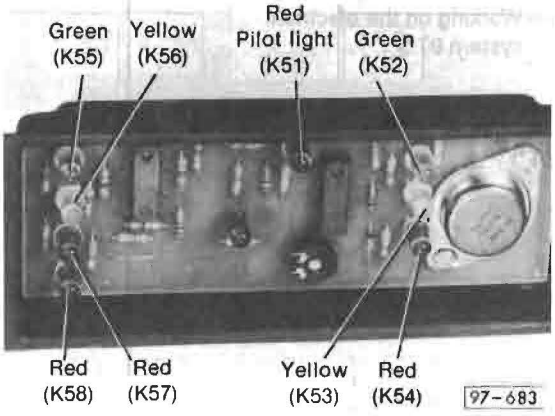

— red pilot light(K51) and red water level indicator light(K58) will light
— connect green wire from known good water tank sender unit to terminal **3** in multi-point connector
— connect one end of jumper wire to battery negative terminal

— connect other end of jumper wire to white, yellow, and green wire of sender unit one after another
- water tank level indicator lights red(K57), yellow(K56), and green(K55), will light—red water tank level light(K58) will go out

— go to next page

— if any indicator light does not light during test, indicator light panel is defective
— replace complete indicator light panel if necessary
— if indicator light panel **OK,** check wiring
— if wiring **OK,** replace water tank sender unit

Water pump, checking

— visually check level of water in water tank—must be minimum 1 US gal. (approximate)

Note

Water pump shuts off automatically if water level is below 0.5 US gal. (Basic model) or 0.8 US gal. (DeLuxe model) to prevent pump from running dry

— check fuse on water pump and fuse located under driver's seat
— remove indicator light panel from sink cabinet but do **not** disconnect multi-point connector

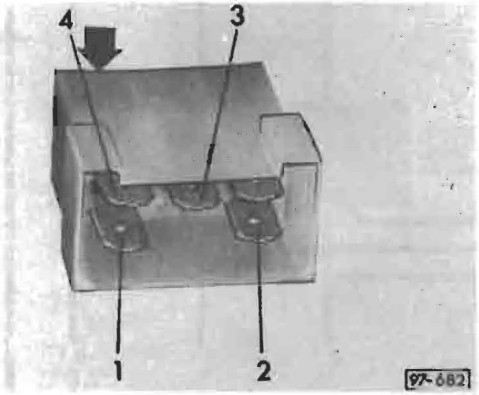

— connect test light to back-side of terminal **4** (arrow)

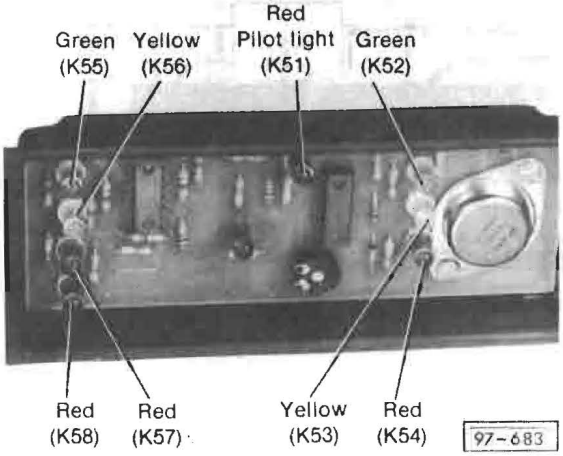

— if either green(K55), yellow(K56), or red(K57) water tank level indicator light is lit, test light must also light
— if test light does not light, indicator light panel is defective
— replace complete indicator light panel if necessary
— if test light lights, check wiring and water pump switch in faucet
— if wiring and switch **OK**, replace water pump

WARNING

Never remove/install external electrical outlet, inside electrical outlets, circuit breaker with switch, or refrigerator if vehicle is connected to 115 volts AC. Check for good ground connections on 115-volt system after installing electrical equipment or components.
Use suitable test equipment to check voltage on 115-volt system.

Description	Current track
Amber light diode, battery voltage below 12.5 volts	25
Amber light diode, water tank level full	24
Display unit	21-27
Display unit switch	23
Exterior socket (110 V)	2-7
Gas flame ON sensor	44
Gas flame ON warning light	24
Green light diode, battery voltage above 12.5 volts	25
Green light diode, water tank level full	24
Interior light, center	49-50
Interior socket (110 V)	3-12
Red light diode, battery voltage below 12.0 volts	25
Red light diode, water tank level part empty	24
Refrigerator	12-16, 41-46
Refrigerator 110 volt resistance	13
Refrigerator 12 Volt resistance	45
Refrigerator 12-Volt heater relay	24-26
Refrigerator condenser fan	42
Refrigerator fan thermoswitch	42
Refrigerator socket (110 V)	15
Refrigerator switch (110 V, 12 V)	14, 45
Refrigerator thermostat (110 V/gas system)	14
Thermo fuse (Camper)	3-8
Water pump	31
Water pump switch	31
Water tank low level sensor	34

Wire connectors

T1 — single, on refrigerator
T3a — three-point, on refrigerator
T4 — four-point, on water tank
T6 — six-point, on display unit

Ground connections

(48) — behind refrigerator, left side

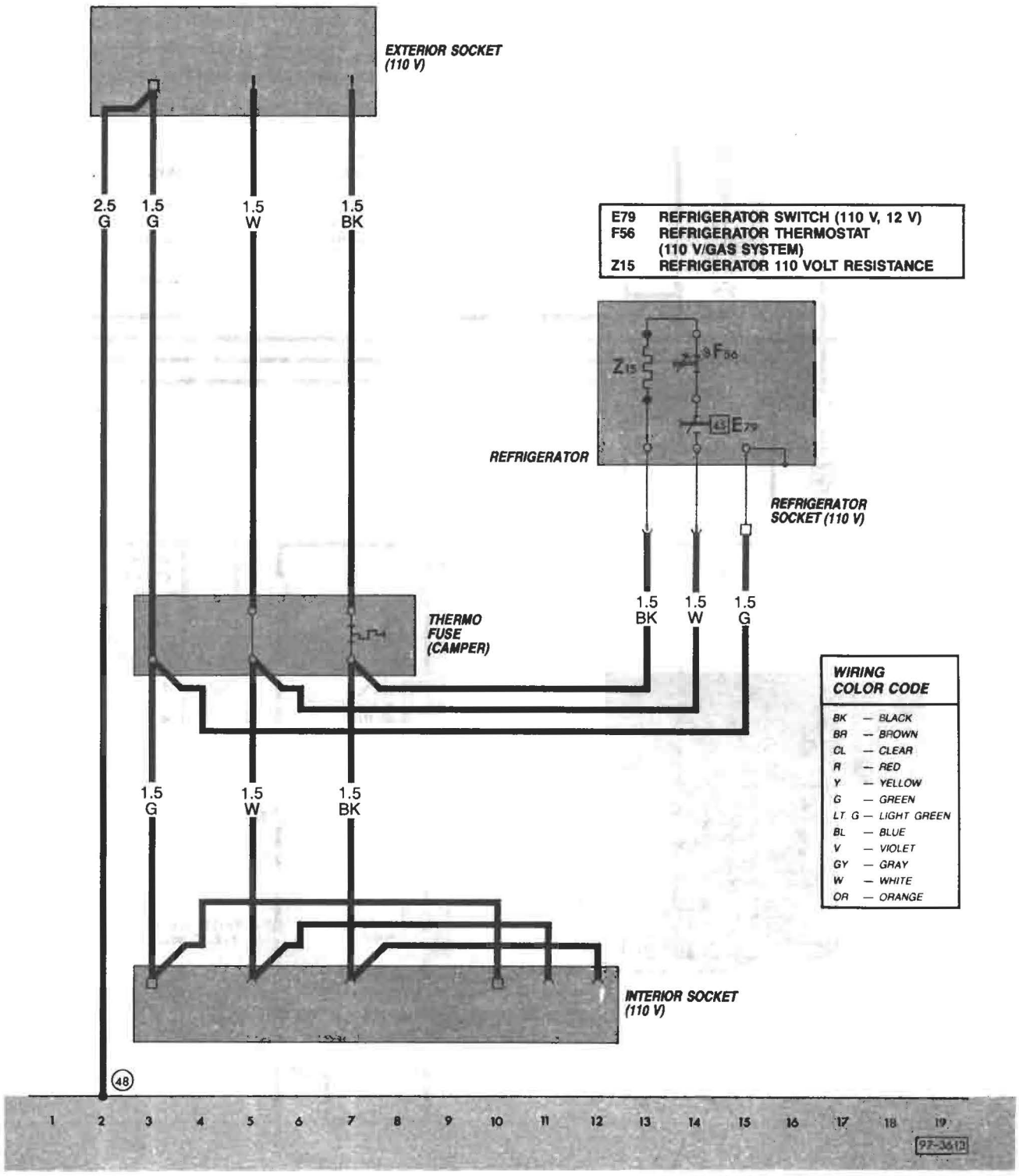
EXTERIOR SOCKET (110 V)
2.5 G
1.5 G
1.5 W
1.5 BK
E79 REFRIGERATOR SWITCH (110 V, 12 V)
F56 REFRIGERATOR THERMOSTAT (110 V/GAS SYSTEM)
Z15 REFRIGERATOR 110 VOLT RESISTANCE
REFRIGERATOR
REFRIGERATOR SOCKET (110 V)
1.5 BK
1.5 W
1.5 G
THERMO FUSE (CAMPER)
WIRING COLOR CODE
BK — BLACK
BR — BROWN
CL — CLEAR
R — RED
Y — YELLOW
G — GREEN
LT G — LIGHT GREEN
BL — BLUE
V — VIOLET
GY — GRAY
W — WHITE
OR — ORANGE
1.5 G
1.5 W
1.5 BK
INTERIOR SOCKET (110 V)
48
1 2 3 4 5 6 7 8 9 10 11 12 13 14 15 16 17 18 19
97-3612

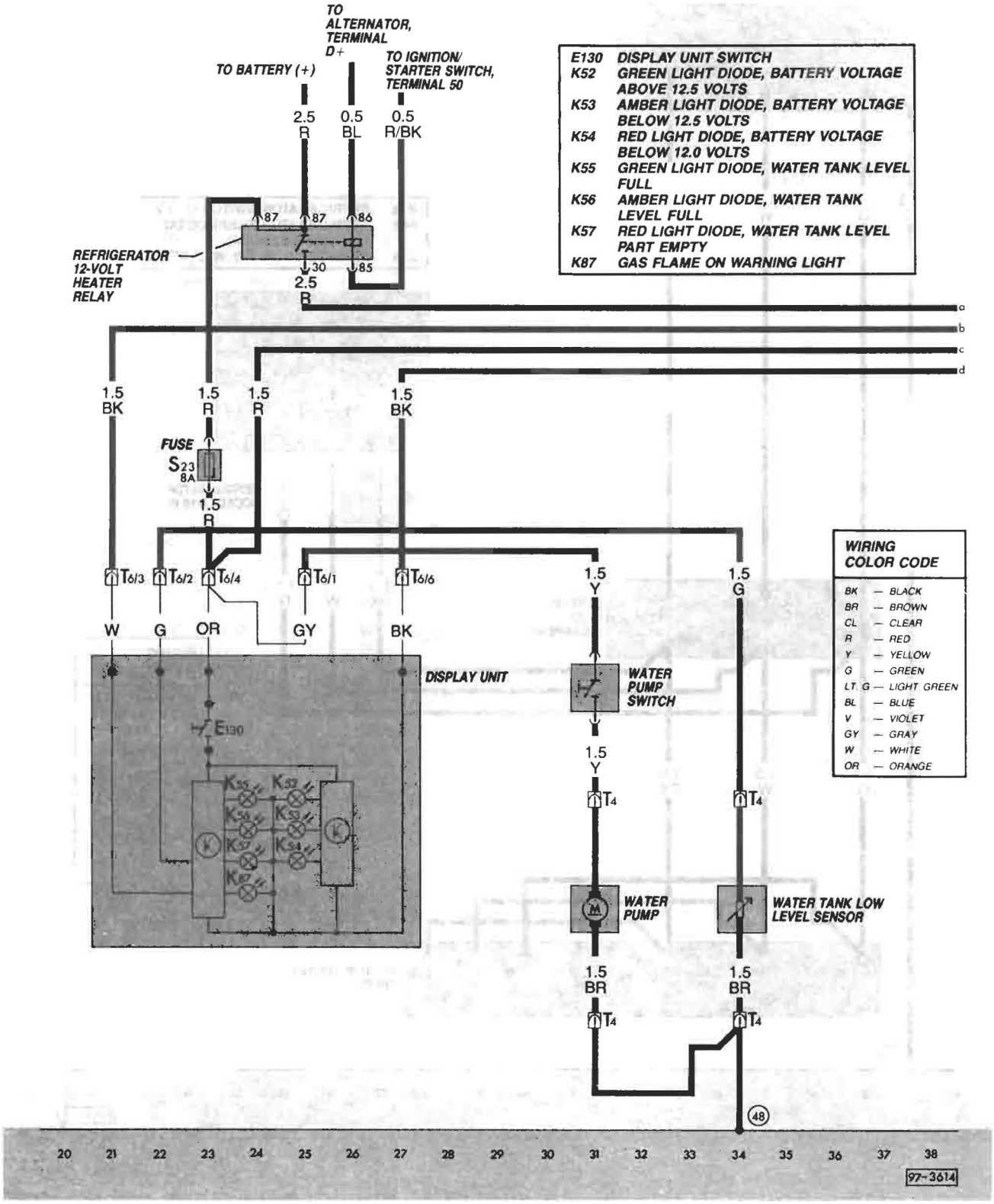
TO ALTERNATOR, TERMINAL D+
TO BATTERY (+)
TO IGNITION/ STARTER SWITCH, TERMINAL 50
2.5 R
0.5 BL
0.5 R/BK
87
87
86
30
85
REFRIGERATOR 12-VOLT HEATER RELAY
2.5 R
E130 DISPLAY UNIT SWITCH
K52 GREEN LIGHT DIODE, BATTERY VOLTAGE ABOVE 12.5 VOLTS
K53 AMBER LIGHT DIODE, BATTERY VOLTAGE BELOW 12.5 VOLTS
K54 RED LIGHT DIODE, BATTERY VOLTAGE BELOW 12.0 VOLTS
K55 GREEN LIGHT DIODE, WATER TANK LEVEL FULL
K56 AMBER LIGHT DIODE, WATER TANK LEVEL FULL
K57 RED LIGHT DIODE, WATER TANK LEVEL PART EMPTY
K87 GAS FLAME ON WARNING LIGHT
a
b
c
d
1.5 BK
1.5 R
1.5 R
1.5 BK
FUSE
S23 8A
1.5 R
T6/3
T6/2
T6/4
T6/1
T6/6
W
G
OR
GY
BK
DISPLAY UNIT
E130
K55
K52
K56
K53
K57
K54
K87
1.5 Y
1.5 G
WATER PUMP SWITCH
1.5 Y
T4
T4
WATER PUMP
WATER TANK LOW LEVEL SENSOR
1.5 BR
1.5 BR
T4
T4
48
WIRING COLOR CODE
BK — BLACK
BR — BROWN
CL — CLEAR
R — RED
Y — YELLOW
G — GREEN
LT. G — LIGHT GREEN
BL — BLUE
V — VIOLET
GY — GRAY
W — WHITE
OR — ORANGE
20 21 22 23 24 25 26 27 28 29 30 31 32 33 34 35 36 37 38
97-3614

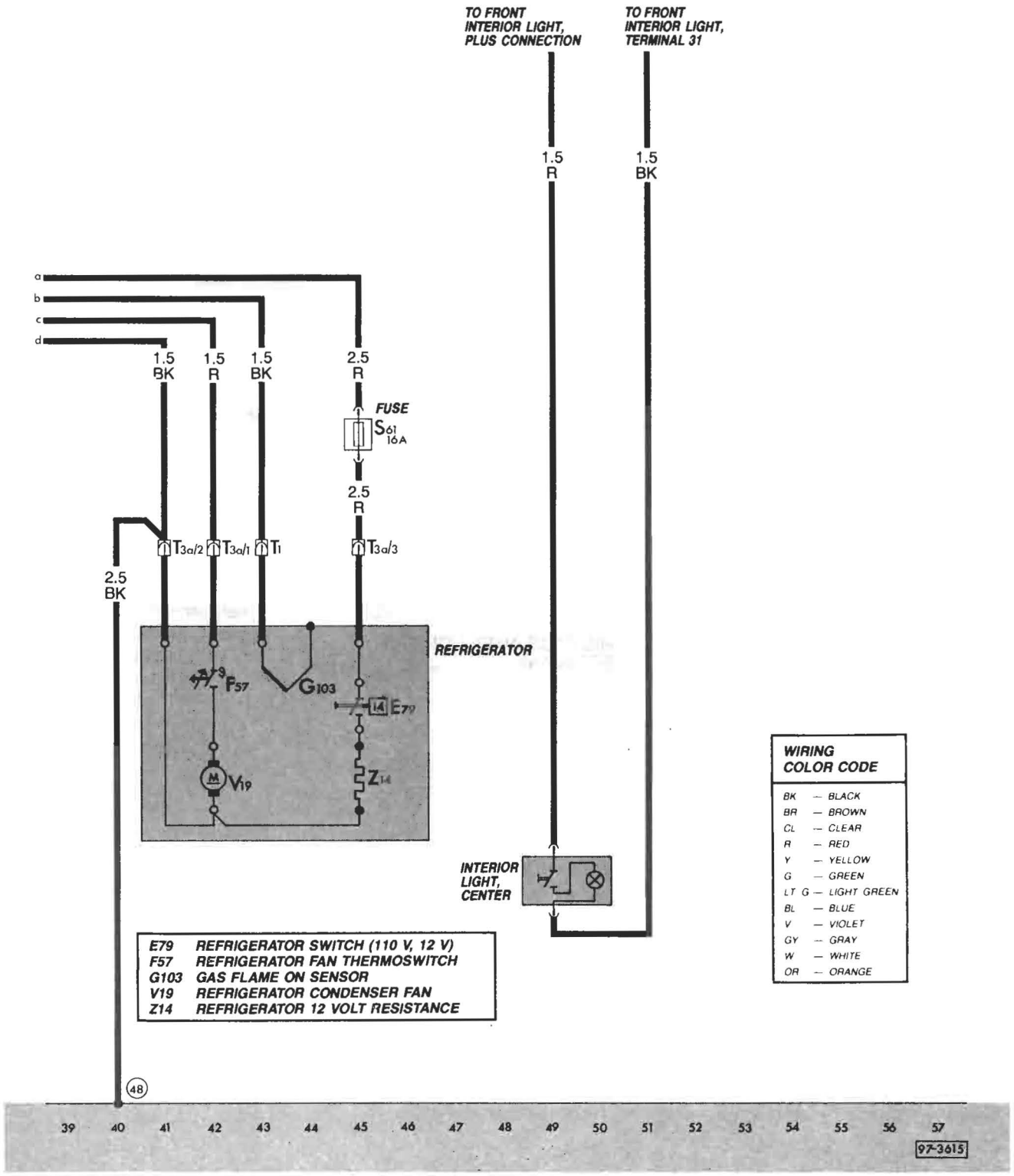
TO FRONT INTERIOR LIGHT, PLUS CONNECTION
TO FRONT INTERIOR LIGHT, TERMINAL 31
1.5 R
1.5 BK
a
b
c
d
1.5 BK
1.5 R
1.5 BK
2.5 R
FUSE
S61 16A
2.5 R
T3a/2
T3a/1
T1
T3a/3
2.5 BK
REFRIGERATOR
F57
G103
14
E79
M
V19
Z14
INTERIOR LIGHT, CENTER
E79 REFRIGERATOR SWITCH (110 V, 12 V)
F57 REFRIGERATOR FAN THERMOSWITCH
G103 GAS FLAME ON SENSOR
V19 REFRIGERATOR CONDENSER FAN
Z14 REFRIGERATOR 12 VOLT RESISTANCE
WIRING COLOR CODE
BK — BLACK
BR — BROWN
CL — CLEAR
R — RED
Y — YELLOW
G — GREEN
LT G — LIGHT GREEN
BL — BLUE
V — VIOLET
GY — GRAY
W — WHITE
OR — ORANGE
48
39 40 41 42 43 44 45 46 47 48 49 50 51 52 53 54 55 56 57
97-3615

Description	Current track
Amber light diode, battery voltage below 12.5 volts	20
Amber light diode, water tank level full	18
Display unit	15-22
Display unit switch	17
Exterior socket (110 V)	2-6
Gas flame ON sensor	33
Gas flame ON warning light	18
Green light diode, battery voltage above 12.5 volts	20
Green light diode, water tank level full	18
Interior light, center	39-40
Interior socket (110 V)	2-10
Red light diode, battery voltage below 12.0 volts	20
Red light diode, water tank level part empty	18
Refrigerator	11-14, 31-36
Refrigerator 110 volt resistance	11
Refrigerator 12 volt resistance	35
Refrigerator 12-volt heater relay	19-21
Refrigerator condenser fan	32
Refrigerator fan thermoswitch	32
Refrigerator socket (110 V)	11-13
Refrigerator switch (110 V, 12 V)	12, 35
Refrigerator thermostat (110 V/gas system)	12
Thermo fuse (Camper)	2-6
Water pump	25
Water pump switch	25
Water tank low level sensor	28

Wire connectors

T1 — single, on refrigerator
T2a — two-point, behind dashboard
T3a — three-point, on refrigerator
T4 — four-point, on water tank
T6 — six-point, on display unit

Ground connections

(48) — behind refrigerator, left side

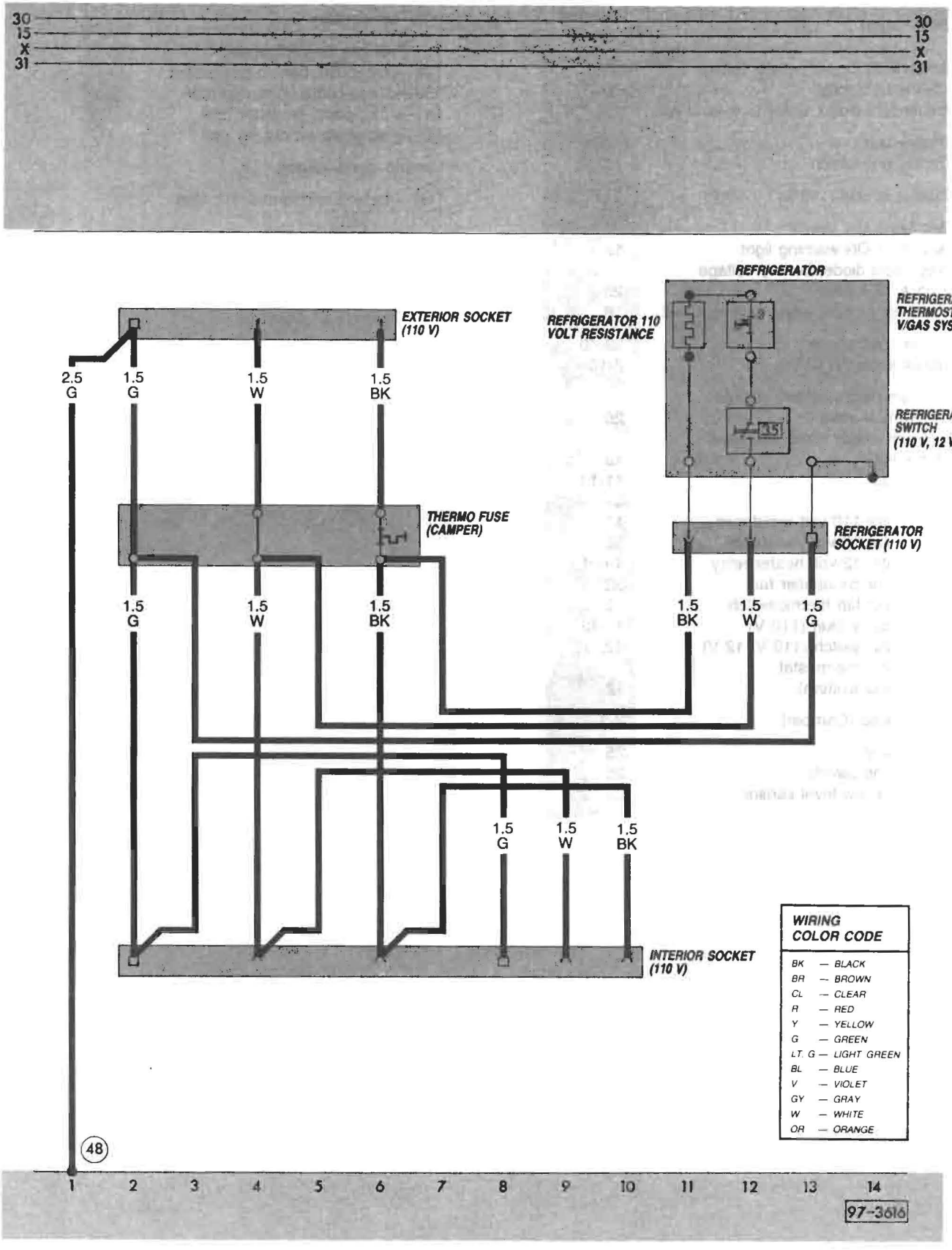
30
15
X
31
30
15
X
31
REFRIGERATOR
REFRIGERATOR THERMOSTAT (110 V/GAS SYSTEM)
REFRIGERATOR 110 VOLT RESISTANCE
REFRIGERATOR SWITCH (110 V, 12 V)
EXTERIOR SOCKET (110 V)
2.5 G
1.5 G
1.5 W
1.5 BK
THERMO FUSE (CAMPER)
REFRIGERATOR SOCKET (110 V)
1.5 G
1.5 W
1.5 BK
1.5 BK
1.5 W
1.5 G
1.5 G
1.5 W
1.5 BK
INTERIOR SOCKET (110 V)
WIRING COLOR CODE
BK — BLACK
BR — BROWN
CL — CLEAR
R — RED
Y — YELLOW
G — GREEN
LT. G — LIGHT GREEN
BL — BLUE
V — VIOLET
GY — GRAY
W — WHITE
OR — ORANGE
48
1 2 3 4 5 6 7 8 9 10 11 12 13 14
97-3616

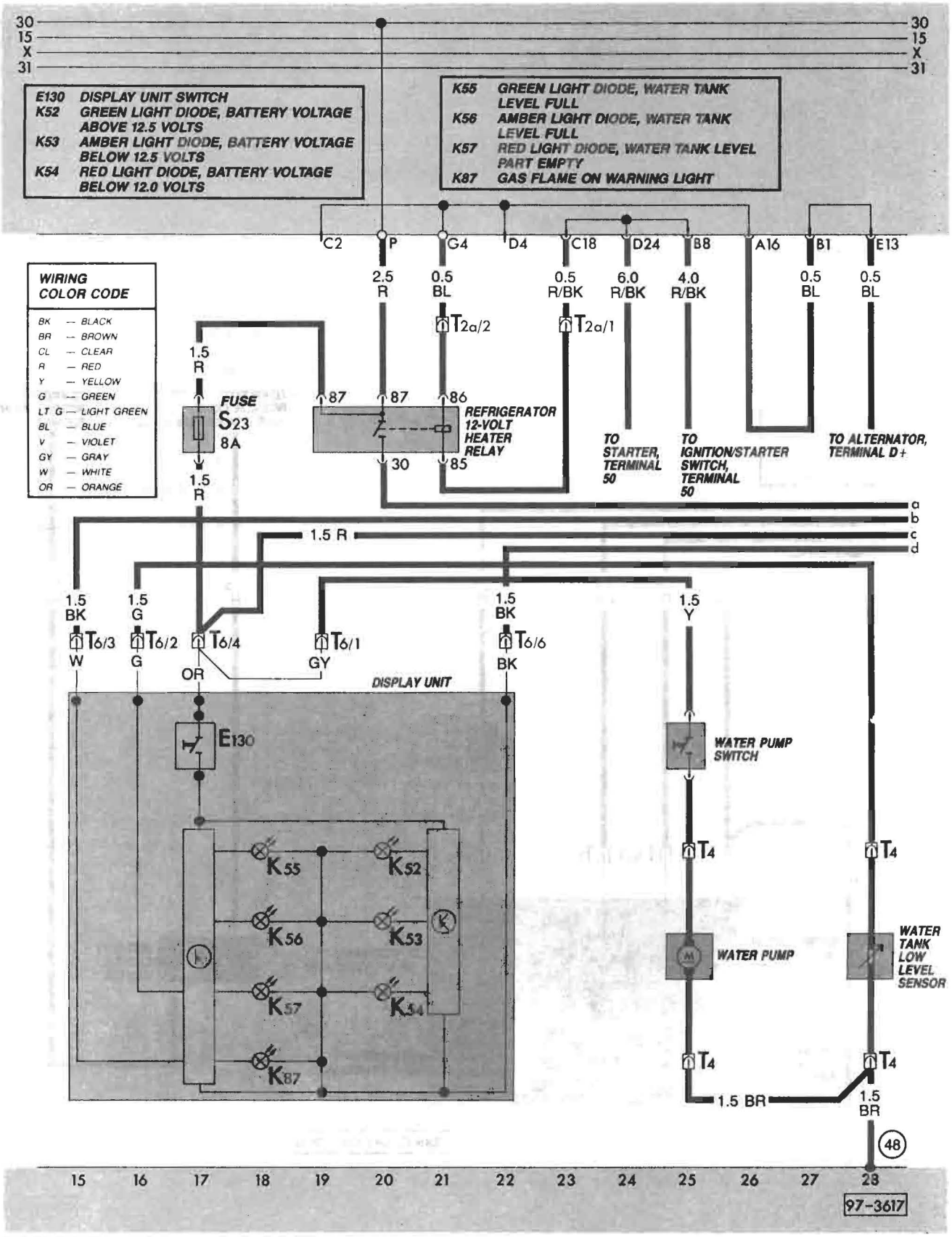
30
15
X
31
E130 DISPLAY UNIT SWITCH
K52 GREEN LIGHT DIODE, BATTERY VOLTAGE ABOVE 12.5 VOLTS
K53 AMBER LIGHT DIODE, BATTERY VOLTAGE BELOW 12.5 VOLTS
K54 RED LIGHT DIODE, BATTERY VOLTAGE BELOW 12.0 VOLTS
K55 GREEN LIGHT DIODE, WATER TANK LEVEL FULL
K56 AMBER LIGHT DIODE, WATER TANK LEVEL FULL
K57 RED LIGHT DIODE, WATER TANK LEVEL PART EMPTY
K87 GAS FLAME ON WARNING LIGHT
C2 P G4 D4 C18 D24 B8 A16 B1 E13
2.5 R
0.5 BL
0.5 R/BK
6.0 R/BK
4.0 R/BK
0.5 BL
0.5 BL
T2a/2
T2a/1
WIRING COLOR CODE
BK — BLACK
BR — BROWN
CL — CLEAR
R — RED
Y — YELLOW
G — GREEN
LT G — LIGHT GREEN
BL — BLUE
V — VIOLET
GY — GRAY
W — WHITE
OR — ORANGE
1.5 R
FUSE
S23
8A
1.5 R
87 87 86
30 85
REFRIGERATOR 12-VOLT HEATER RELAY
TO STARTER, TERMINAL 50
TO IGNITION/STARTER SWITCH, TERMINAL 50
TO ALTERNATOR, TERMINAL D+
a
b
c
d
1.5 R
1.5 BK
1.5 G
1.5 BK
1.5 Y
T6/3 W
T6/2 G
T6/4 OR
T6/1 GY
T6/6 BK
DISPLAY UNIT
E130
K55
K52
K56
K53
K57
K54
K87
WATER PUMP SWITCH
T4
T4
WATER PUMP
WATER TANK LOW LEVEL SENSOR
T4
T4
1.5 BR
1.5 BR
48
15 16 17 18 19 20 21 22 23 24 25 26 27 28
97-3617

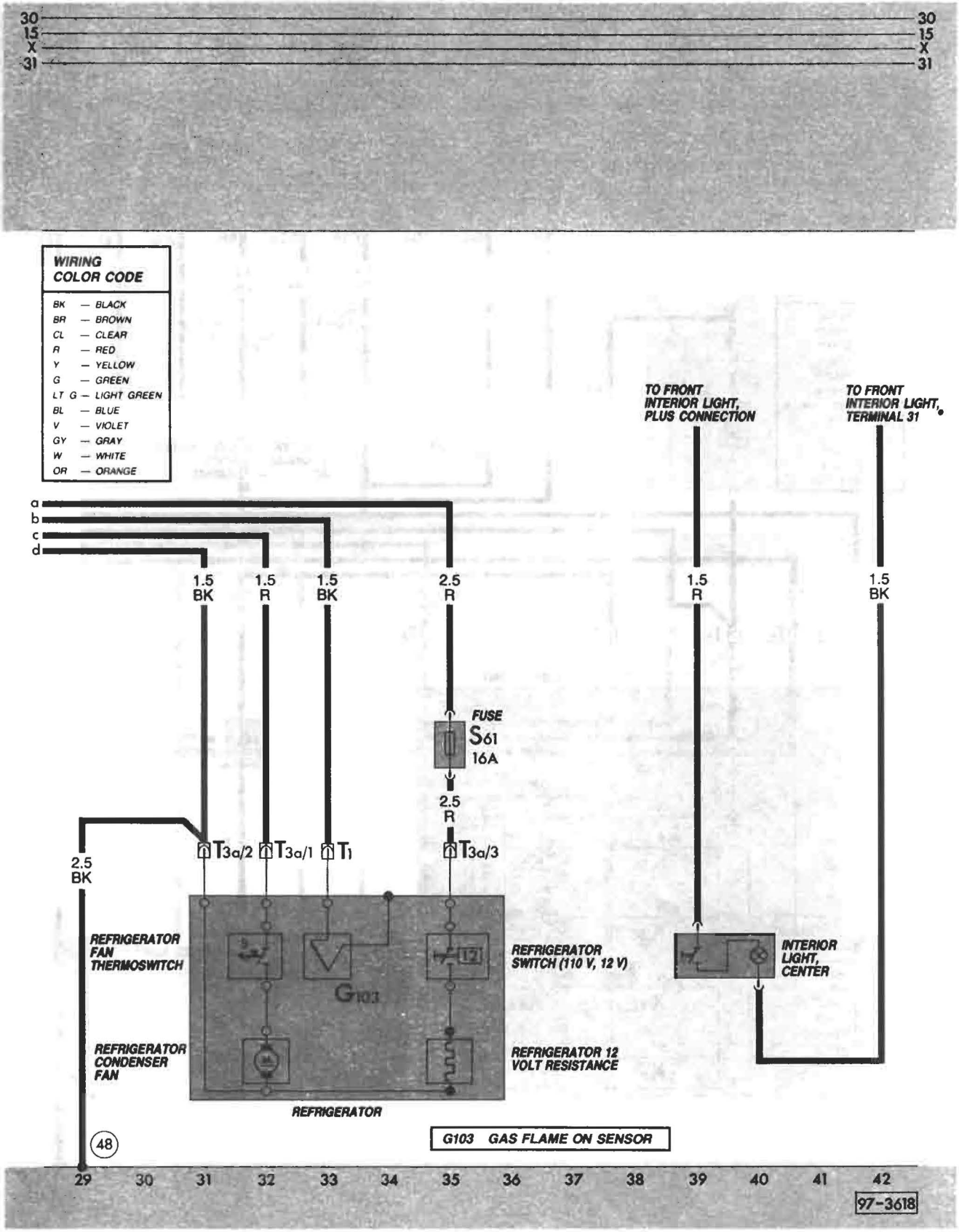
30
15
X
31
30
15
X
31
WIRING COLOR CODE
BK — BLACK
BR — BROWN
CL — CLEAR
R — RED
Y — YELLOW
G — GREEN
LT G — LIGHT GREEN
BL — BLUE
V — VIOLET
GY — GRAY
W — WHITE
OR — ORANGE
TO FRONT INTERIOR LIGHT, PLUS CONNECTION
TO FRONT INTERIOR LIGHT, TERMINAL 31
a
b
c
d
1.5 BK
1.5 R
1.5 BK
2.5 R
1.5 R
1.5 BK
FUSE
S61
16A
2.5 R
2.5 BK
T3a/2
T3a/1
T1
T3a/3
REFRIGERATOR FAN THERMOSWITCH
REFRIGERATOR SWITCH (110 V, 12 V)
G103
INTERIOR LIGHT, CENTER
REFRIGERATOR CONDENSER FAN
REFRIGERATOR 12 VOLT RESISTANCE
REFRIGERATOR
G103 GAS FLAME ON SENSOR
48
29 30 31 32 33 34 35 36 37 38 39 40 41 42
97-3618

Description	Current Track
Alternator	6
Auxiliary battery	2
Battery	3
Battery cut-out relay	1-2
Ignition/start switch	12-15
Starter	4-5
Voltage regulator	6-7

Wire connectors

T1d — single, wire distributor, LF eng. compart.
T2k — double, under fuse/relay panel
T2m— double, under fuse/relay panel
T7a/— seven point, wire distributor, LF eng. compart.
T14/— fourteen point, on inst. cluster

Ground Connections

(1) — ground from battery to body
(2) — ground from transmission to body
(3) — ground from aux. battery to body

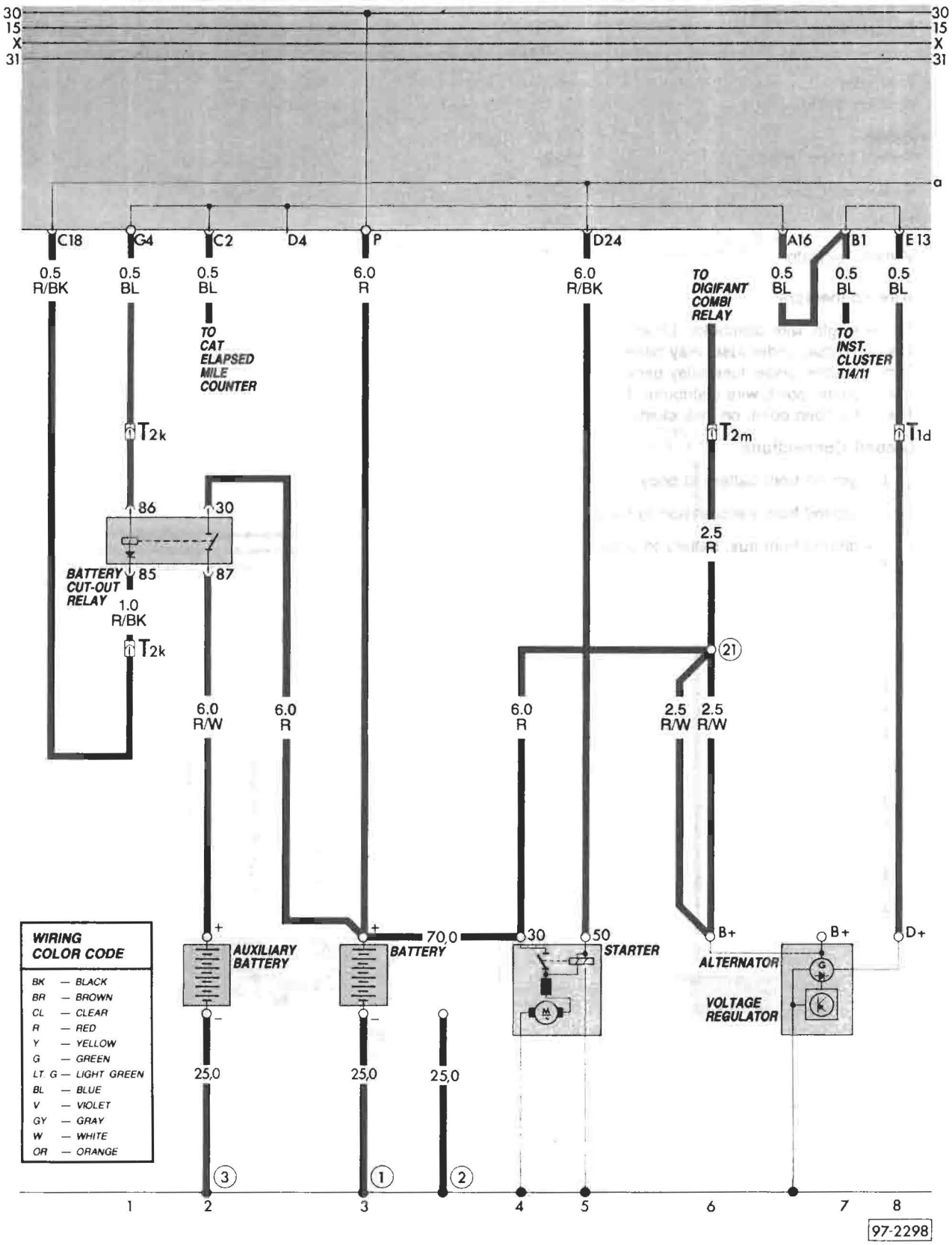
30
15
X
31
a
C18
G4
C2
D4
P
D24
A16
B1
E13
0.5 R/BK
0.5 BL
0.5 BL
6.0 R
6.0 R/BK
TO DIGIFANT COMBI RELAY
0.5 BL
0.5 BL
0.5 BL
TO CAT ELAPSED MILE COUNTER
TO INST. CLUSTER T14/11
T2k
T2m
T1d
86
30
BATTERY CUT-OUT RELAY
85
87
1.0 R/BK
T2k
2.5 R
21
6.0 R/W
6.0 R
6.0 R
2.5 R/W
2.5 R/W
WIRING COLOR CODE
BK — BLACK
BR — BROWN
CL — CLEAR
R — RED
Y — YELLOW
G — GREEN
LT. G — LIGHT GREEN
BL — BLUE
V — VIOLET
GY — GRAY
W — WHITE
OR — ORANGE
AUXILIARY BATTERY
BATTERY
70,0
30
50
STARTER
B+
B+
D+
ALTERNATOR
VOLTAGE REGULATOR
25,0
25,0
25,0
3
1
2
1
2
3
4
5
6
7
8
97-2298

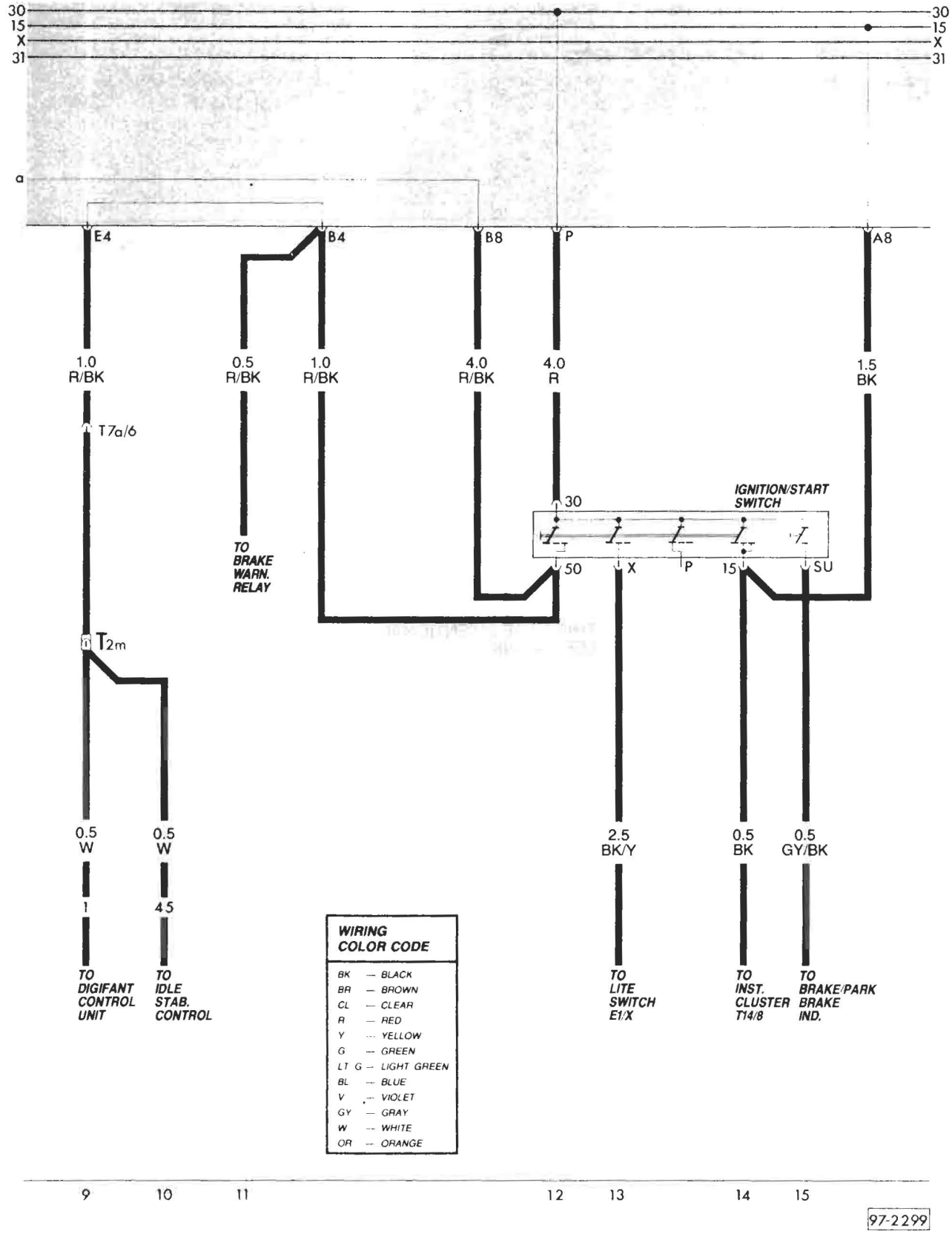
30
15
X
31
a
E4
B4
B8
P
A8
1.0 R/BK
0.5 R/BK
1.0 R/BK
4.0 R/BK
4.0 R
1.5 BK
T7a/6
T2m
TO BRAKE WARN. RELAY
IGNITION/START SWITCH
30
50
X
P
15
SU
0.5 W
0.5 W
2.5 BK/Y
0.5 BK
0.5 GY/BK
1
45
TO DIGIFANT CONTROL UNIT
TO IDLE STAB. CONTROL
TO LITE SWITCH E1/X
TO INST. CLUSTER T14/8
TO BRAKE/PARK BRAKE IND.
WIRING COLOR CODE
BK — BLACK
BR — BROWN
CL — CLEAR
R — RED
Y — YELLOW
G — GREEN
LT G — LIGHT GREEN
BL — BLUE
V — VIOLET
GY — GRAY
W — WHITE
OR — ORANGE
9
10
11
12
13
14
15
97-2299

Electrical System—Wiring, Diesel

Index

General
— Battery/Ground cables 97.9a, 97.9b disconnecting/connecting 97.6
— Cautions and Warnings 97.2
— Dashboard wiring harness 97.7
— Engine/Body ground connections 97.6
— Fuse/Relay panel, removing (1980-1985) 97.10 (from 1986 m.y.) 97.10a
— How to read wiring diagrams 97.4
— Main wiring harness 97.8
— Starter cable routing 97.9
— Symbols used in wiring diagrams 97.5
— Troubleshooting 97.3
— Working on the electrical system 97.3

1982 Diesel
— Auxiliary heater BA6 (Canada only) 97.47, 97.48
— Cautions and Warnings 97.2
— Fuse/Relay panel 97.10
— Heater booster 97.49-97.51
— Main wiring diagram 97.36-97.40 current track index 97.36
— Rear window wiper 97.26

1983 Diesel
— Auxiliary heater BA6 (Canada only) 97.47, 97.48
— Cautions and warnings 97.2
— Fuse/Relay panel 97.10
— Heater booster 97.49-97.51
— Main wiring diagram 97.41-97.46 current track index 97.41
— Rear window wiper 97.26

Air-cooled AFC
— Refer to 97.11

Camper
— Refer to 97.29

Waterboxer/Syncro (Water-cooled Digifant, Digijet)
— Refer to 97.53

1982 Vanagon
Diesel

Description	Current Track
Alternator	28, 29
Alternator warning light	29
Back-up light, left	14
Back-up light, right	15
Back-up light switch	14
Battery	22
Brake light, left	11
Brake light, right	8
Brake light switch	8-12
Brake warning/parking brake warning light, dual circuit	6-8
Cigarette lighter	84
Cigarette lighter light	83
Clock	56
Coolant over-temperature warning light	36
Coolant temperature gauge	34
Coolant temperature gauge sender	34
Door contact switch/buzzer, front left	3
Door contact switch, front right	
Electro-magnetic cut-off	16
Emergency flasher relay	69-71
Emergency flasher switch	70-79
Emergency flasher warning light	79
Engine oil pressure switch	31
Engine oil pressure warning light	31
Engine temperature sender (pre-glow system)	17
Fresh air controls light	82
Fresh air fan	58
Fresh air fan resistor	57
Fresh air fan switch	57, 58
Fuel gauge	33
Fuel gauge sender	33
Fuses, in fuse/relay panel (S-1 to S13)	
Fuse strip for glow plug, in engine compartment	20
Glow plugs	20, 21
Glow plugs relay	
Headlight dimmer and flasher switch	43-44
Headlight high-beam warning light	38
Horn	13
Horn button	13
Instrument panel light	53-55
Instrument panel light resistor	46
Interior light, front	86, 87
Interior light, rear	88-89
License plate light	48, 49
Light switch	44-47
Load reduction relay (X-contact)	65-68
Parking brake warning light switch	6
Parking light, left	50
Parking light, right	45
Pre-glow/starter switch	24-31
Pre-glow time indicator light	30
Radiator cooling fan	90
Radiator cooling fan relay for 2nd stage	91, 92
Radiator cooling fan thermoswitch (switch on at 95°C/203°F)	90
Radiator cooling fan thermoswitch (switched on at 110°C/230°F)	92
Radio connectors	46, 85
Rear-window defogger heating element	81
Rear-window defogger switch	81-83
Rear-window defogger switch light	82
Rear-window defogger warning light	81

Description	Current Track
Safety belt switch, left	4
Safety belt warning system warning light	5
Safety belt warning system relay	3-5
Sealed-beam unit, left	40-42
Sealed-beam unit, right	41, 43
Side-marker light, rear	47, 52
Side-marker lights, rear	88
Starter	24-26
Tail light, left	51
Tail light, right	46
Turn signal, front left	76
Turn signal, front right	77
Turn signal, rear left	75
Turn signal, rear right	78
Turn signal switch	73
Turn signal warning light	32
Voltage regulator	28
Voltage stabilizer	37
Windshield washer pump	59
Windshield wiper motor	64-66
Windsheild wiper switch	59-66
Windshield wiper/washer intermittent relay	60-63

Wire Connectors

T1b — single, behind dash
T1c — single, behind dash
T1d — single, in engine compartment next to alternator
T — single, behind dash
T1f — single, next to interior light rear, left
T1k — single, behind dash
T2 — double, behind dash
T3 — double, under driver's seat
T3b — three-point, in connector
T3c — three-point, behind dash
T4a — four-point, in connection
T4b — four-point, in connection
T4c — four-point, behind dash
T14/ — fourteen-point, on instrument cluster

Ground Connectors

(1) — Battery ground strap, to body
(2) — transmission/body
(9) — in connection box
(10) — behind dash, next to fuse/relay panel holder
(11) — on rear lid
(12) — on steering box
(13) — behind fuse box
(14) — in engine compartment, next to glowing-time relay
(15) — on crossmember, front left

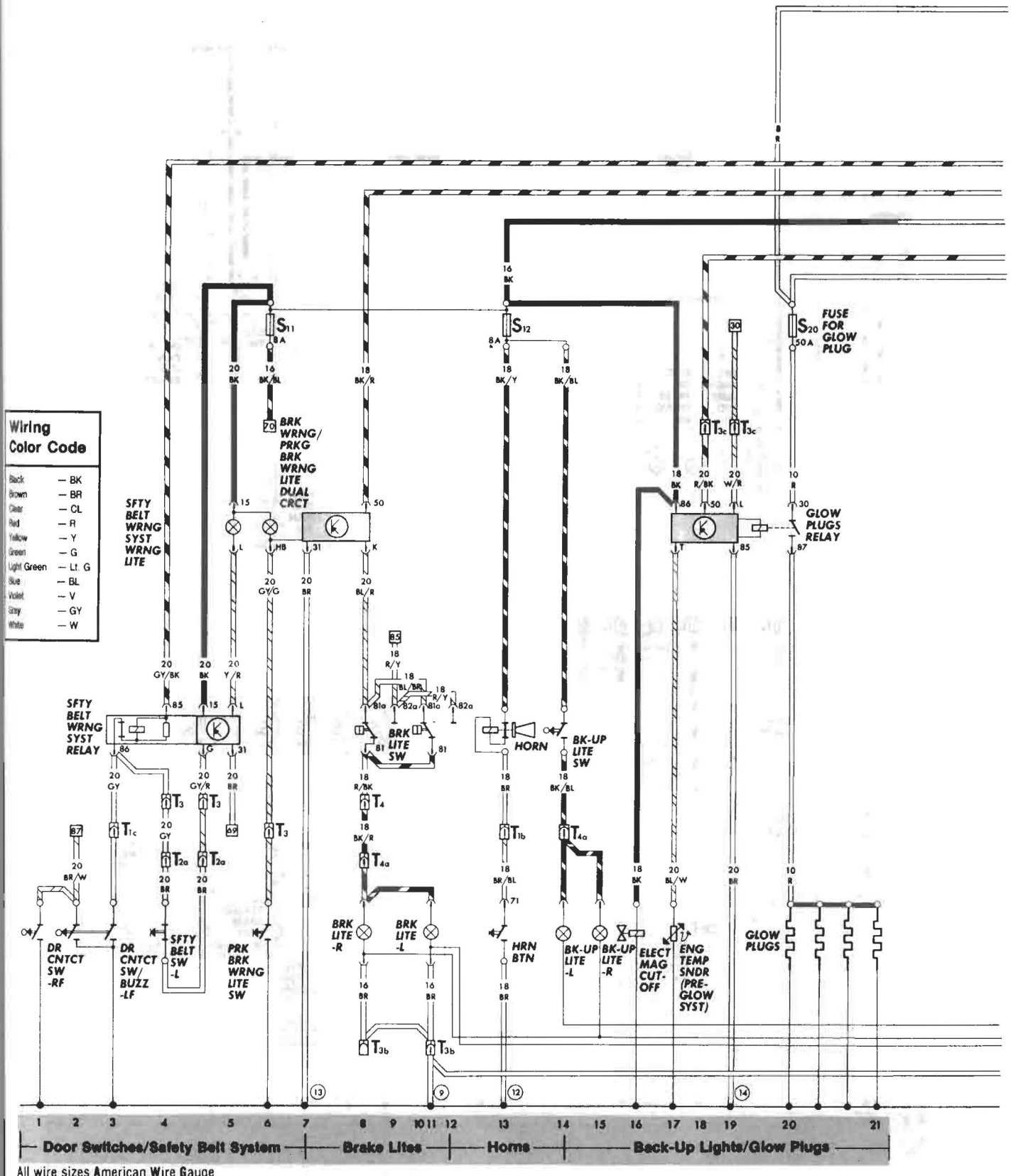

All wire sizes American Wire Gauge

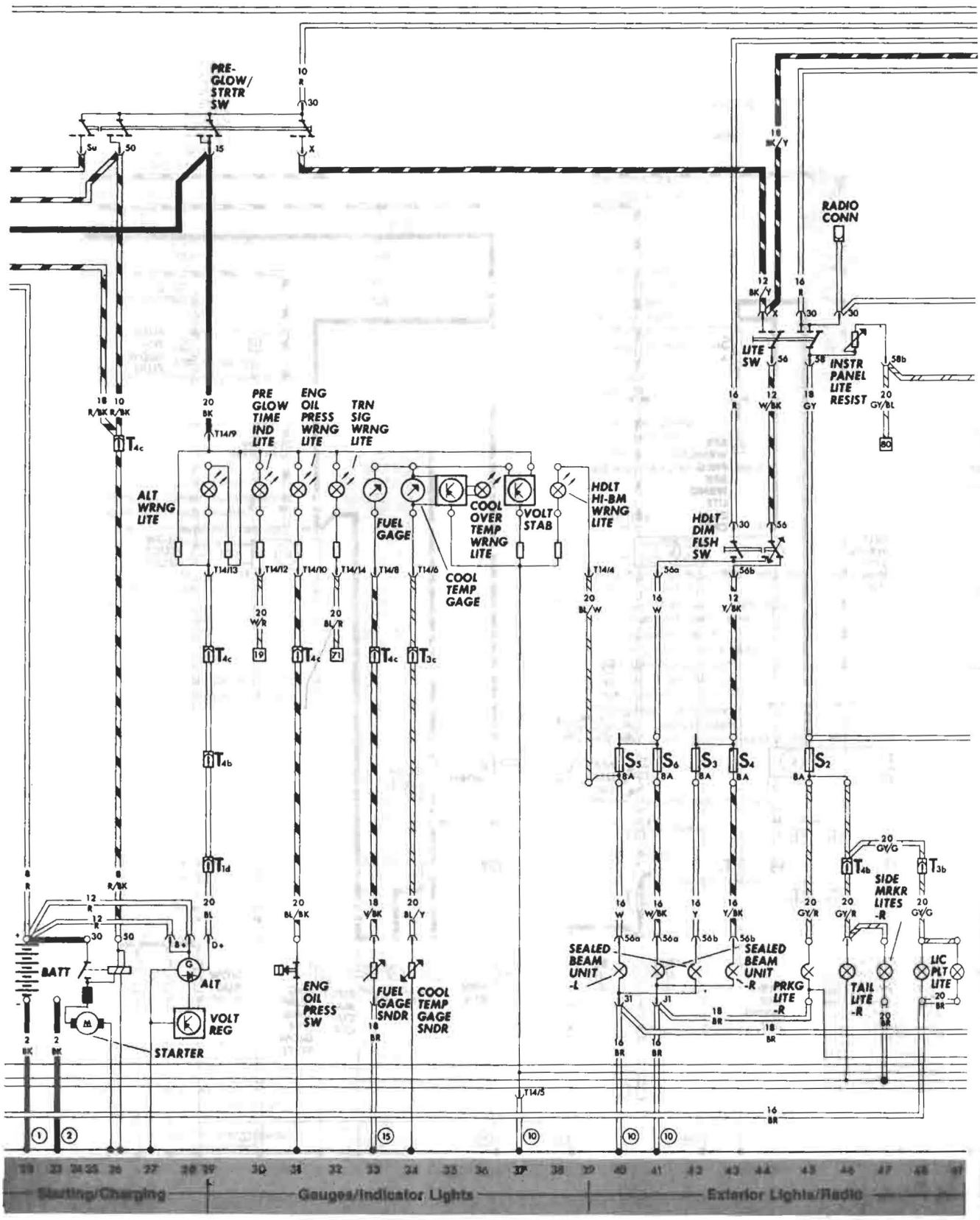
PRE-GLOW/ STRTR SW
RADIO CONN
LITE SW
INSTR PANEL LITE RESIST
PRE GLOW TIME IND LITE
ENG OIL PRESS WRNG LITE
TRN SIG WRNG LITE
ALT WRNG LITE
FUEL GAGE
COOL OVER TEMP WRNG LITE
VOLT STAB
HDLT HI-BM WRNG LITE
COOL TEMP GAGE
HDLT DIM FLSH SW
BATT
ALT
VOLT REG
STARTER
ENG OIL PRESS SW
FUEL GAGE SNDR
COOL TEMP GAGE SNDR
SEALED BEAM UNIT -L
SEALED BEAM UNIT -R
PRKG LITE -R
TAIL LITE -R
SIDE MRKR LITES -R
LIC PLT LITE
Starting/Charging
Gauges/Indicator Lights
Exterior Lights/Radio

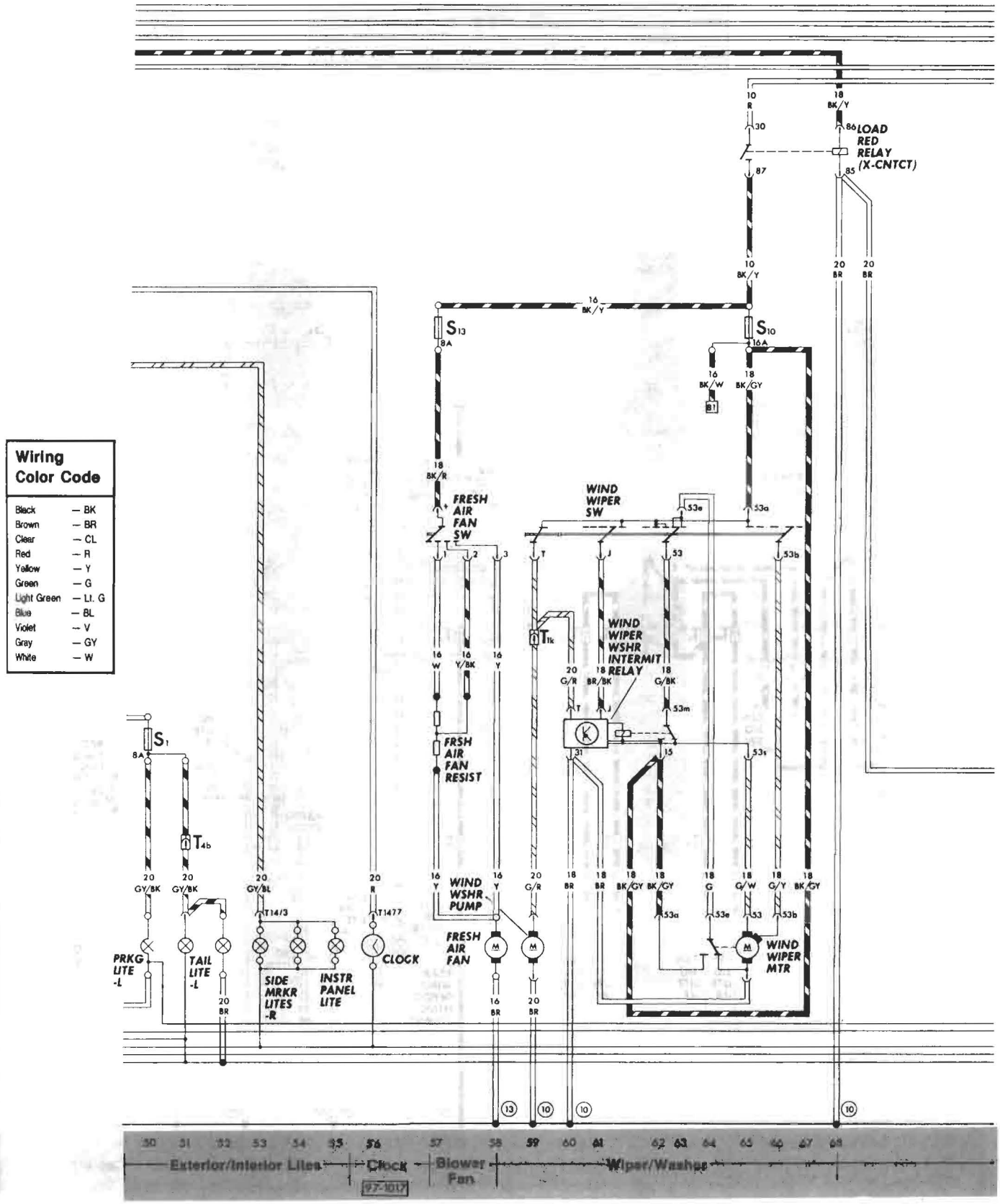
Wiring Color Code
Black — BK
Brown — BR
Clear — CL
Red — R
Yellow — Y
Green — G
Light Green — Lt. G
Blue — BL
Violet — V
Gray — GY
White — W
LOAD RED RELAY (X-CNTCT)
FRESH AIR FAN SW
WIND WIPER SW
WIND WIPER WSHR INTERMIT RELAY
FRSH AIR FAN RESIST
WIND WSHR PUMP
FRESH AIR FAN
WIND WIPER MTR
PRKG LITE -L
TAIL LITE -L
SIDE MRKR LITES -R
INSTR PANEL LITE
CLOCK
Exterior/Interior Lites
Clock
Blower Fan
Wiper/Washer
97-1017

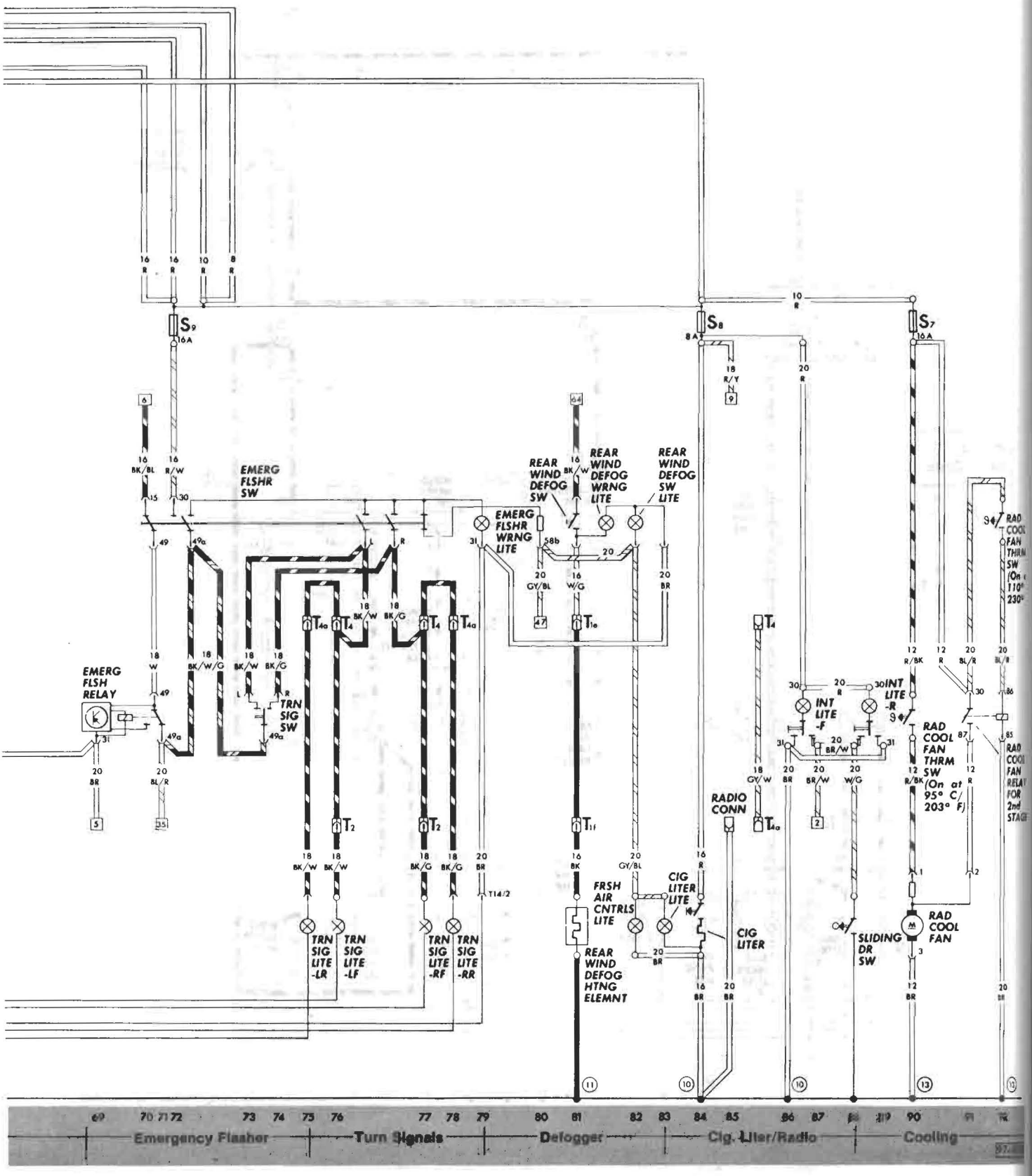
S9
16A
S8
8A
S7
16A
EMERG FLSHR SW
EMERG FLSHR WRNG LITE
REAR WIND DEFOG SW
REAR WIND DEFOG WRNG LITE
REAR WIND DEFOG SW LITE
EMERG FLSH RELAY
TRN SIG SW
TRN SIG LITE -LR
TRN SIG LITE -LF
TRN SIG LITE -RF
TRN SIG LITE -RR
REAR WIND DEFOG HTNG ELEMNT
FRSH AIR CNTRLS LITE
CIG LITER LITE
CIG LITER
RADIO CONN
INT LITE -F
INT LITE -R
SLIDING DR SW
RAD COOL FAN
RAD COOL FAN THRM SW (On at 95° C/ 203° F)
RAD COOL FAN RELAY FOR 2nd STAGE
RAD COOL FAN THRM SW (On at 110° 230°
Emergency Flasher
Turn Signals
Defogger
Cig. Liter/Radio
Cooling

1983 Vanagon
Diesel

Description	Current Track
Alternator	24-26
Alternator warning light	26
Battery	20
Back-up light, left	55
Back-up light, right	56
Back-up light switch	55
Blower fan	105
Blower-fan control-lever light	67
Blower-fan resistance	104
Blower switch	104, 105
Brake light, left	80
Brake light, right	79
Brake-light switch	79, 80
Brake warning light	66
Cigarette lighter	70
Cigarette lighter light	69
Clock	51
Coolant low-level-warning control unit	33, 34
Coolant low-level-warning switch	33
Coolant over-temperature warning light	34
Coolant-temperature gauge	32
Coolant-temperature sending unit	32
Defogger cut-out relay (X-contact)	91-97
Door contact/buzzer switch, left	72, 73
Door contact switch, front right	71
Door contact switch, right sliding door	84
Electromagnetic fuel cut-off	16
Emergency-flasher relay	56-58
Emergency-flasher switch	58-68
Emergency-flasher warning light	66
Engine temperature sender (pre-glow system)	17
Fuel gauge	31
Fuel-gauge sending unit	31
Fuse for glow plugs (S20)	20
Fuses (S1-S13) on fuse/relay panel	—
Glow plugs	20-21
Glow plugs relay	17-20
Headlight dimmer/flasher switch	38-40
Headlight-high-beam light	36
Headlight, left	37, 39
Headlight, right	38, 40
Horn	53
Horn button	53

Description	Current Track
Ignition/starter switch	22-27
Instrument panel light	49, 50
Instrument-panel light dimmer	42
Interior light, front	81-83
Interior light, rear	84-86
License plate light	42, 43
Light switch	40-42
Oil-pressure switch (1.8 bar)	29
Oil pressure warning light	29
Parking light, left	48
Parking light, right	41
Parking-brake warning light switch	76
Radiator fan	87
Radiator-fan relay	88-90
Radiator-fan thermoswitch I	87
Radiator-fan thermoswitch II	90
Radio connection	60, 94
Rear side-marker lights	45, 46
Rear-window defogger heater element	92
Rear-window defogger indicator light	93
Rear-window defogger switch	92
Rear-window defogger switch light	94
Seat-belt buzzer contact, left	74
Seat-belt warning light	75
Seat-belt warning relay	73, 75
Starter	22, 23
Tail light, left	47
Tail light, right	44
Temperature sensor II	6
Turn-signal indicator light	30
Turn-signal light, front-left	65
Turn-signal light, front-right	62
Turn-signal light, rear-left	64
Turn-signal light, rear-right	63
Turn-signal switch	61
Voltage regulator	24-26
Voltage stabilizer	35
Washer/wiper intermittent relay	98-100
Windshield-washer pump	96
Windshield-wiper intermittent switch	98-103
Windshield wiper motor	100-103

Wire Connectors

- T1 — single, in engine compart. left
- T1a — single, in connector housing
- T1b — single, in connector housing
- T1c — single, near alternator in engine compart.
- T1d — single, behind dash
- T1e — single, in connector housing
- T1f — single, behind dash
- T1g — single, behind dash
- T1h — behind dash
- T1i — at roof cross-beam, rear right
- T1k — single, behind dash
- T2 — double, on fuse/relay panel
- T2a — double, behind dash
- T2b — double, behind dash
- T2c — double, behind dash
- T2d — double, behind dash
- T2e — double, in connector housing
- T2f — double, behind dash
- T2g — double, in connector housing
- T2h — double, in connector housing
- T2i — double, in connector housing
- T2k — double, behind dash
- T2l — double, below driver's seat
- T3 — 3-point, near alternator in engine compart.
- T3a — 3-point, behind dash
- T4 — 4-point, behind dash
- T4a — 4-point, behind dash
- T7 — 7-point, in connector housing
- T8 — 8-point, behind dash, near brake warning lights
- T14 — 14-point on instrument cluster

Ground Connectors

- (1) — from battery to body
- (2) — from transmission to body
- (9) — behind dash near fuse/relay panel
- (10) — behind dash
- (12) — at steering-gear housing
- (13) — behind air vent
- (14) — at rear deck
- (15) — near fuel pump at floor board/crossmember
- (17) — near ignition distributor
- (18) — left at cylinder head
- (19) — near ignition coil in engine compart., left
- (21) — plus connection, in connector housing



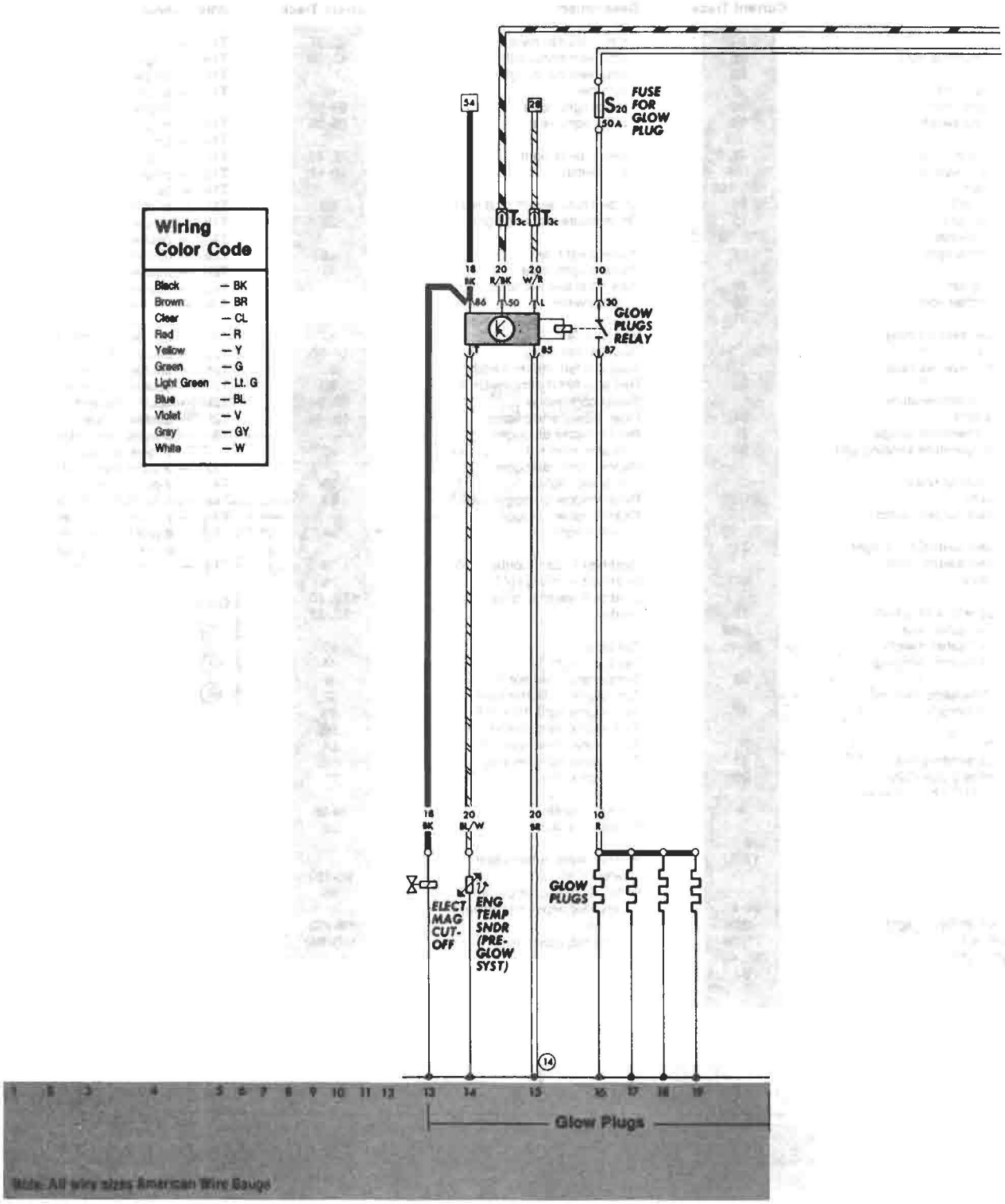
Wiring Color Code
Black — BK
Brown — BR
Clear — CL
Red — R
Yellow — Y
Green — G
Light Green — Lt. G
Blue — BL
Violet — V
Gray — GY
White — W
54
28
S20
50A
FUSE FOR GLOW PLUG
T3c
T3c
18 BK
20 R/BK
20 W/R
10 R
86
50
L
30
GLOW PLUGS RELAY
87
85
18 BK
20 BL/W
20 BR
10 R
ELECT MAG CUT-OFF
ENG TEMP SNDR (PRE-GLOW SYST)
GLOW PLUGS
14
1 2 3 4 5 6 7 8 9 10 11 12 13 14 15 16 17 18 19
Glow Plugs
Note: All wire sizes American Wire Gauge

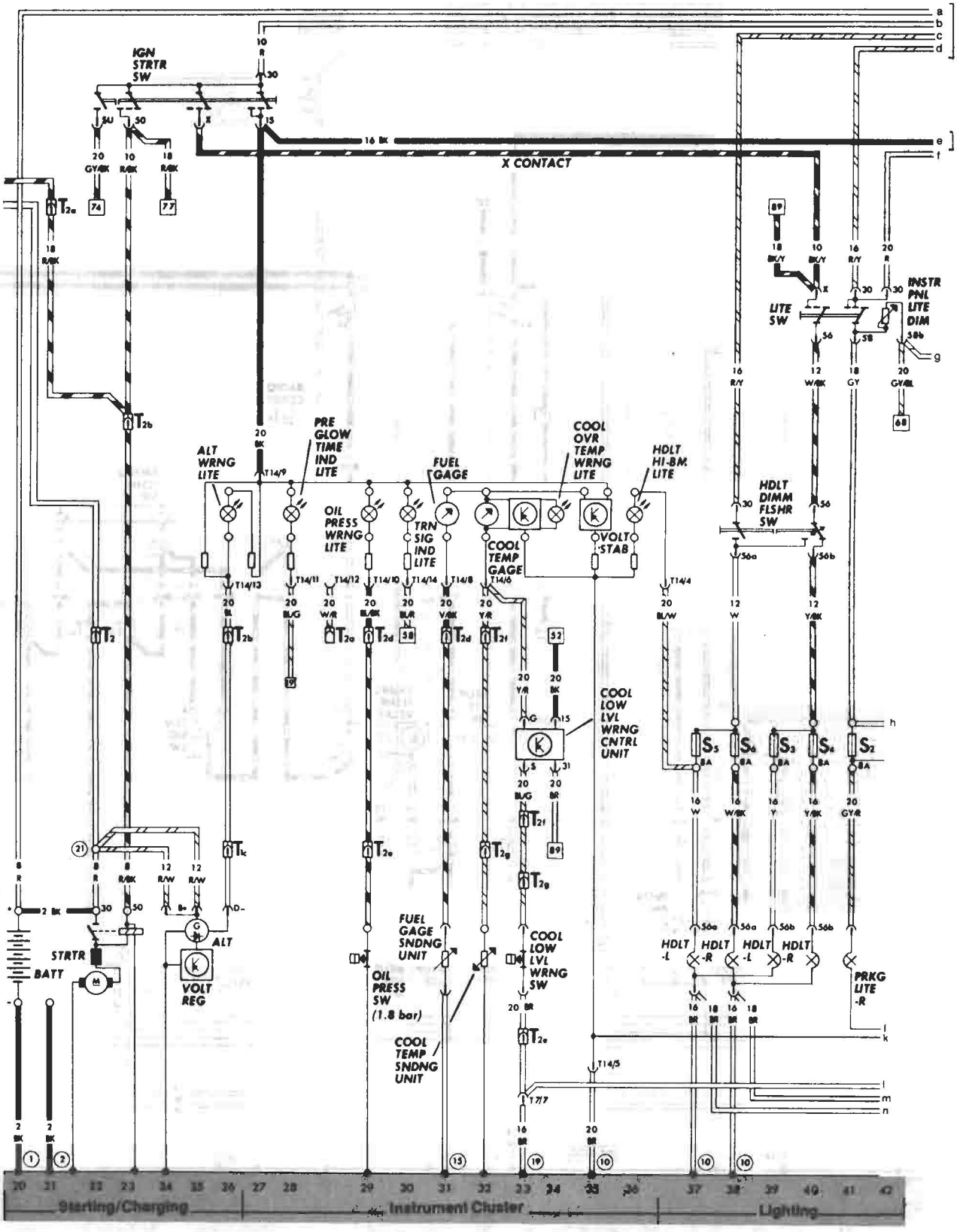
IGN STRTR SW
X CONTACT
LITE SW
INSTR PNL LITE DIM
ALT WRNG LITE
PRE GLOW TIME IND LITE
FUEL GAGE
COOL OVR TEMP WRNG LITE
HDLT HI-BM LITE
HDLT DIMM FLSHR SW
OIL PRESS WRNG LITE
TRN SIG IND LITE
COOL TEMP GAGE
VOLT STAB
COOL LOW LVL WRNG CNTRL UNIT
FUEL GAGE SNDNG UNIT
OIL PRESS SW (1.8 bar)
COOL LOW LVL WRNG SW
COOL TEMP SNDNG UNIT
STRTR
BATT
ALT
VOLT REG
HDLT -L
HDLT -R
PRKG LITE -R
Starting/Charging
Instrument Cluster
Lighting

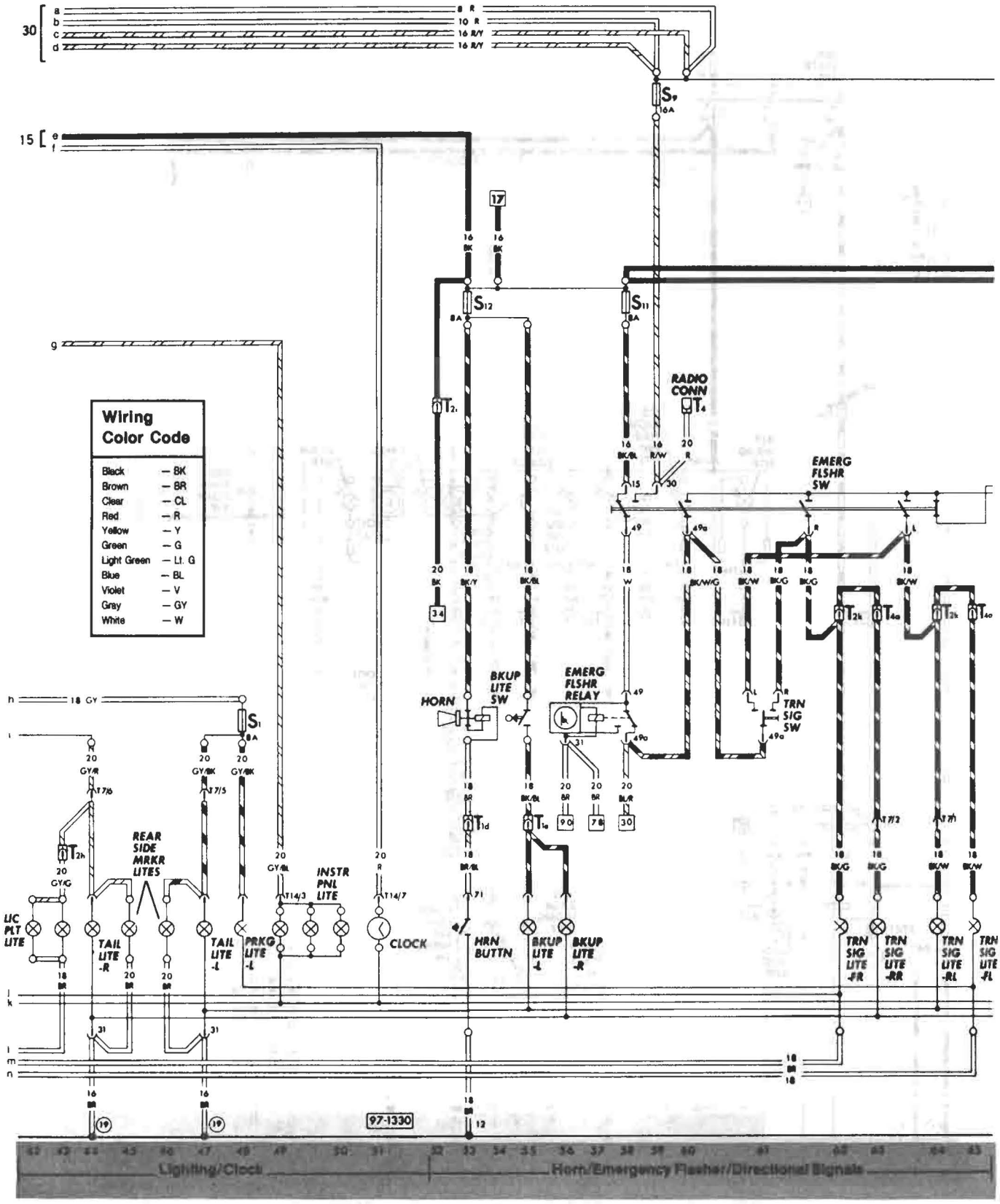

Note: All wire sizes American Wire Gauge

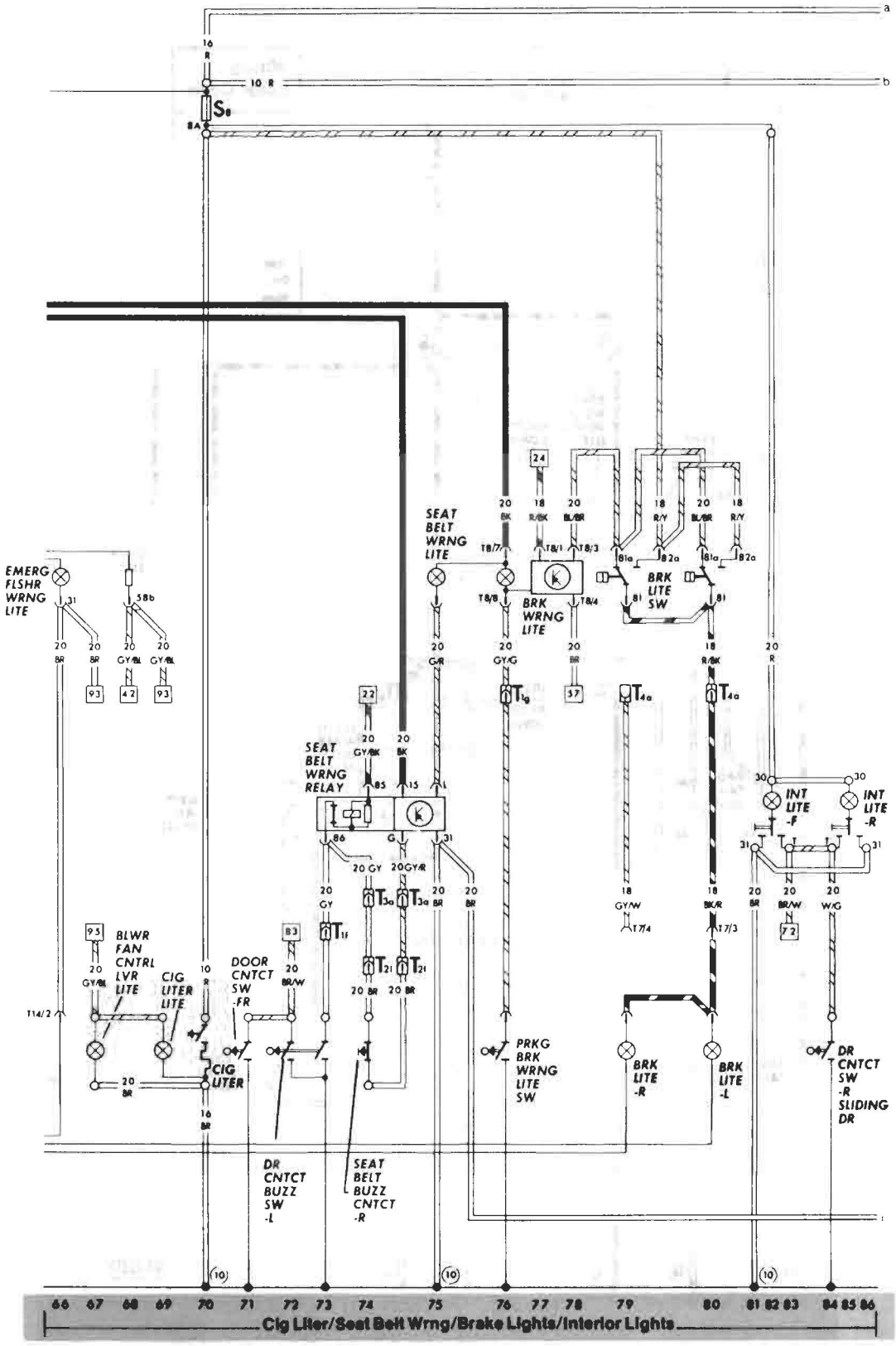
EMERG FLSHR WRNG LITE
SEAT BELT WRNG LITE
BRK WRNG LITE
BRK LITE SW
SEAT BELT WRNG RELAY
INT LITE -F
INT LITE -R
BLWR FAN CNTRL LVR LITE
CIG LITER LITE
CIG LITER
DOOR CNTCT SW -FR
PRKG BRK WRNG LITE SW
BRK LITE -R
BRK LITE -L
DR CNTCT SW -R SLIDING DR
DR CNTCT BUZZ SW -L
SEAT BELT BUZZ CNTCT -R
66 67 68 69 70 71 72 73 74 75 76 77 78 79 80 81 82 83 84 85 86
Cig Liter/Seat Belt Wrng/Brake Lights/Interior Lights

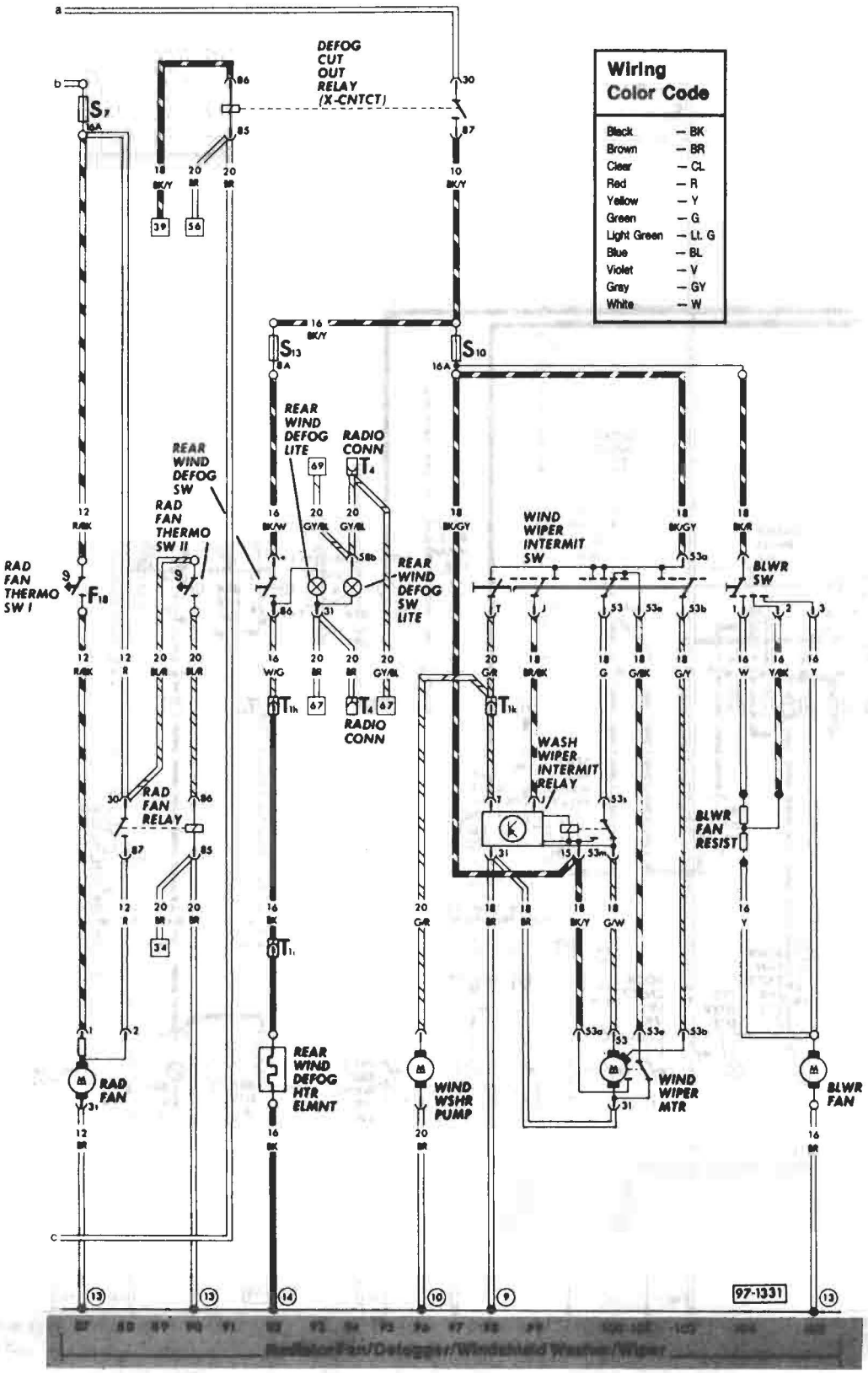
Wiring Color Code
Black — BK
Brown — BR
Clear — CL
Red — R
Yellow — Y
Green — G
Light Green — Lt. G
Blue — BL
Violet — V
Gray — GY
White — W
DEFOG CUT OUT RELAY (X-CNTCT)
REAR WIND DEFOG SW
RAD FAN THERMO SW II
RAD FAN THERMO SW I
REAR WIND DEFOG LITE
RADIO CONN
REAR WIND DEFOG SW LITE
WIND WIPER INTERMIT SW
BLWR SW
WASH WIPER INTERMIT RELAY
RAD FAN RELAY
BLWR FAN RESIST
RAD FAN
REAR WIND DEFOG HTR ELMNT
WIND WSHR PUMP
WIND WIPER MTR
BLWR FAN
97-1331

Description	Current Track
Air recirculation blower	8
Combustion air blower	11
Condensor	14
Flame switch	12
Fuel pump	10
Fuel pump contact breaker	10
Glow plug	13
Heater contact breaker	12
Heater element	14
Heater ignition coil	12
Heater indicator lite	6
Heater relay	7-12
Main suppressor	8
Overheat switch	9
Safety switch	15, 16
Suppressor	12, 13
Temp. regulating switch	1-6
Temp. sensor	8
To load reduction relay	6

Wire Connectors

T1a — single, under instrument panel
T2 — double, on air recirc. blower
T4a — four point, on heater control
T4b — four point, on heater control

Ground Connections

(8) — bolt on heater control

(18) — bolt on heater ignition coil

Go to next page

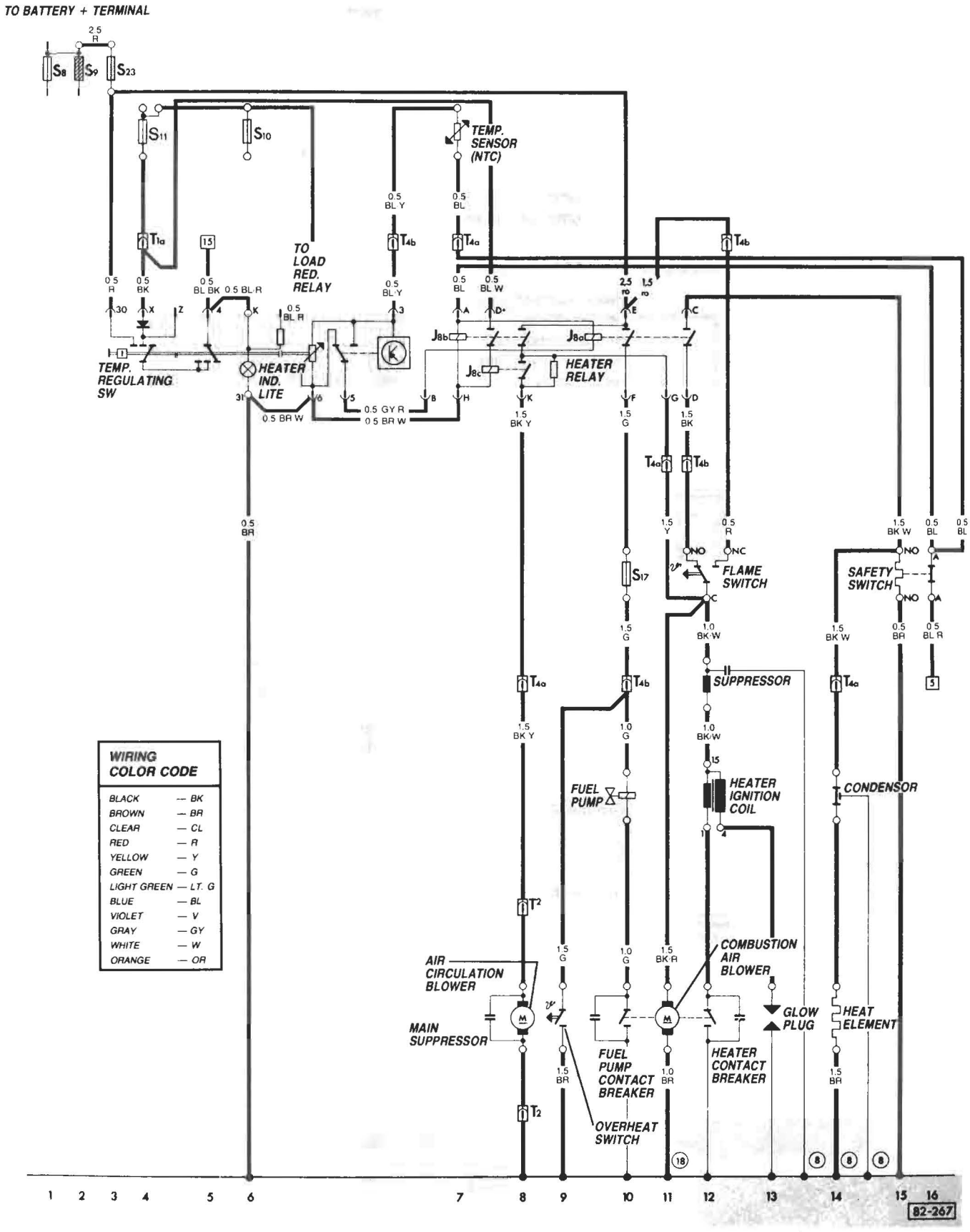
TO BATTERY + TERMINAL
2.5 R
S8
S9
S23
S11
S10
TEMP. SENSOR (NTC)
TO LOAD RED. RELAY
TEMP. REGULATING SW
HEATER IND. LITE
HEATER RELAY
J8b
J8a
J8c
0.5 BR W
0.5 GY R
0.5 BR W
S17
FLAME SWITCH
SAFETY SWITCH
SUPPRESSOR
FUEL PUMP
HEATER IGNITION COIL
CONDENSOR
AIR CIRCULATION BLOWER
MAIN SUPPRESSOR
COMBUSTION AIR BLOWER
GLOW PLUG
HEAT ELEMENT
FUEL PUMP CONTACT BREAKER
HEATER CONTACT BREAKER
OVERHEAT SWITCH
WIRING COLOR CODE
BLACK — BK
BROWN — BR
CLEAR — CL
RED — R
YELLOW — Y
GREEN — G
LIGHT GREEN — LT. G
BLUE — BL
VIOLET — V
GRAY — GY
WHITE — W
ORANGE — OR
82-267

Heater Booster
Diesel

Description	Current Track
Air circulation blower	10
Air circulation blower relay	5-16
Combustion air blower	6-22
Combustion air valve	20
Compulsary start relay	12-13
Contact breaker for fuel pumps (in combustion air blower)	22
Contact breaker for heater (in combustion air blower)	7
Control unit	4-24
Diode (behind dash next to relay)	12, 14
Flame switch	11
Flame switch relay	11-17
Fuel pump (large quantity)	22
Fuel pump (small quantity)	22
Fuel pump relays	18-22
Fuse main (16A)	3
Fuse, overheating (8A)	23
Fuses on fuse/relay panel	—
S7, 8, 9, 10	—
Glow plug	15
Glow/spark plug resistance wire	15
Glow/spark plug resistor relay	15-17
Heater control light	3
Ignition coil	7
Light switch	1
Load-reduction relay	4
Overheat switch	23
Spark plug	8
Suppressor for air circulation blower	10
Suppressor for glow/spark plug	15
Suppressor for ignition coil	7-8
Temperature regulator control	4-5
Temperature regulator switch	1-3
Temperature regulator unit	4-5
Temperature sensor	4

Wire Connectors

T1a — single, fuse relay panel
T1b — single, fuse relay panel
T2a — two-point, behind dash, left
T4a — four-point, behind dash, left
T4b — four-point, behind dash, left

Go to next page

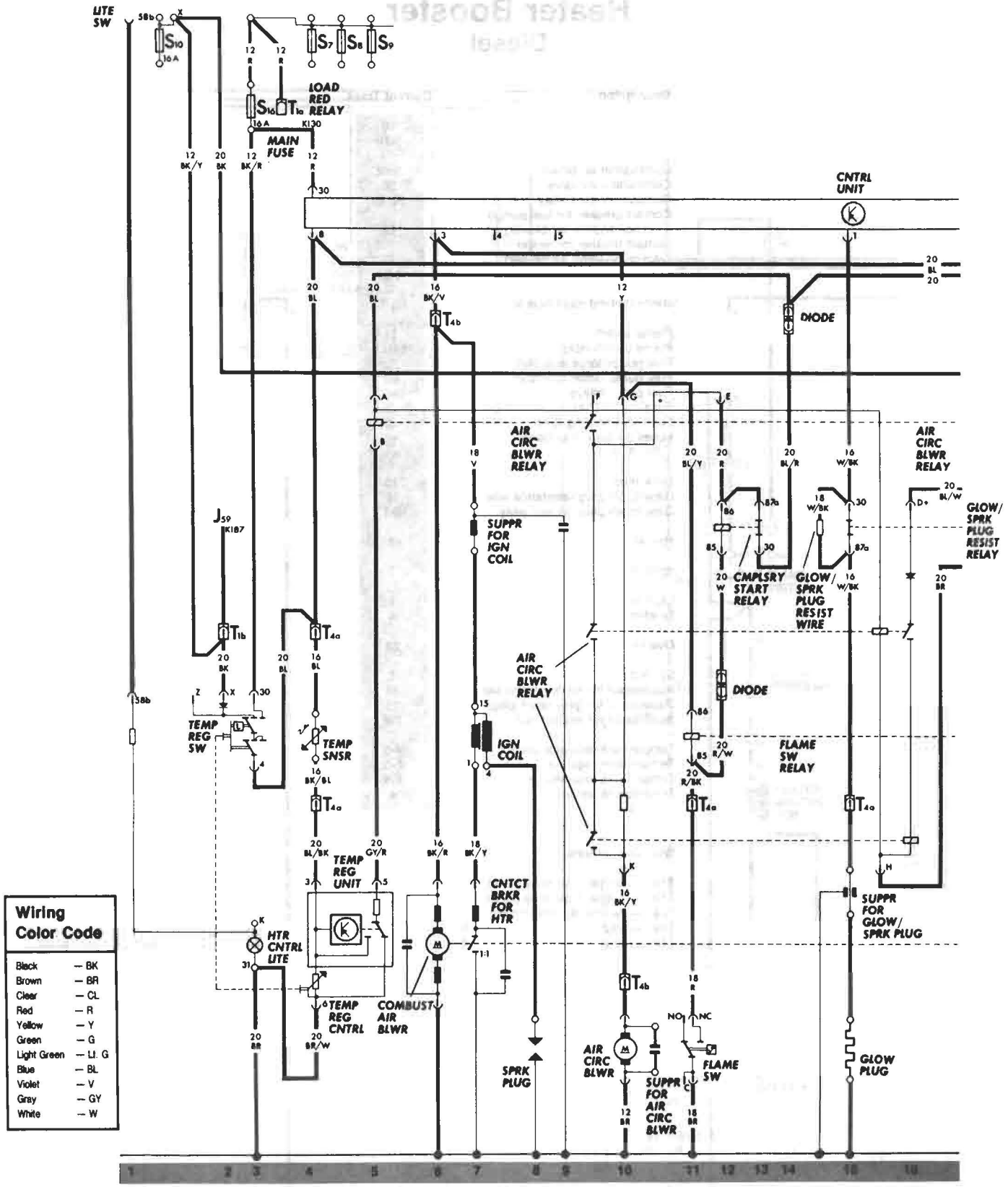

Wiring Color Code

Black	— BK
Brown	— BR
Clear	— CL
Red	— R
Yellow	— Y
Green	— G
Light Green	— Lt. G
Blue	— BL
Violet	— V
Gray	— GY
White	— W

Note: All wire sizes American Wire Gauge

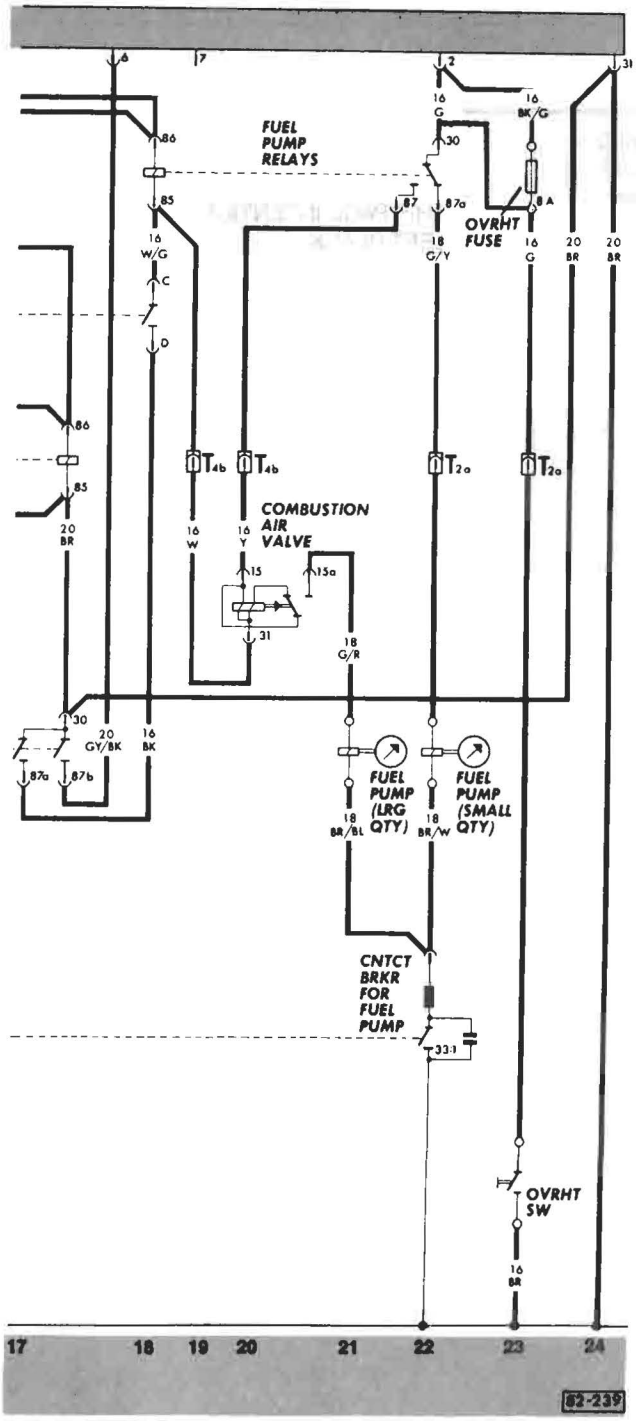
FUEL PUMP RELAYS
OVRHT FUSE
COMBUSTION AIR VALVE
FUEL PUMP (LRG QTY)
FUEL PUMP (SMALL QTY)
CNTCT BRKR FOR FUEL PUMP
OVRHT SW
17
18
19
20
21
22
23
24
82-239

THIS PAGE INTENTIONALLY
LEFT BLANK

Electrical System—Wiring, Waterboxer

Index

General
— Battery/Ground cables
97.9a, 97.9b
disconnecting/connecting 97.6
— Cautions and Warnings 97.2
— Dashboard wiring harness 97.7
— Engine/Body ground
connections 97.6
— Fuse/Relay panel, removing
(1980-1985) 97.10
(from 1986 m.y.) 97.10a
— How to read wiring diagrams 97.4
— Main wiring harness 97.8
— Starter cable routing 97.9
— Symbols used in
wiring diagrams 97.5
— Troubleshooting 97.3
Working on the electrical
system 97.3

Air-cooled AFC
— Refer to 97.11

Camper
— Refer to 97.29

Diesel
— Refer to 97.29

— Air conditioning
1984, 1985 97.137
1986-1988 97.139
from 1989 97.142
— Automatic transmission
1986-1989 97.146
from 1990 97.219
— Auxiliary battery
1986-1989 (Auto. trans.) 97.221
from 1990 97.224
See also 97.29
— Auxiliary heater BA6
from 1987 Canada only 97.148
— Auxiliary heater BBW46 (Syncro)
1986-1988 Canada 97.151
from 1989 Canada 97.155
— Central locking system
1986 97.159
1987-1989 97.162
from 1990 97.226
— Crankcase ventilation heat element
1985 97.165
1986 97.166
— Cruise control
auto. trans.
1986 97.168
1987-1989 97.176
from 1990 97.229
man. trans.
1986 97.174
1987-1989 97.171
from 1990 97.232
— Daytime running lights (Canada)
to Dec. 1989 97.234
from Dec. 1989 to May 1990
97.238
from May 1990 97.241

— Differential lock
1986-1989 Syncro 97.178
— Heated driver's seat
1986 97.179
1987-1989 Canada 97.181
from 1990 Canada 97.244
— Main wiring diagram
1983, 1984 97.54
1985 97.60
1986
up to VIN G 055 689 97.67
from VIN G 055 690 97.85
1987 97.102
1988, 1989 97.119
from 1990 97.201
— Power mirrors
1986 up to VIN G 105 000 97.183
1986 from VIN G 105 001 97.185
from 1987 97.185
— Power windows
1986 97.187
from 1987 97.189
— Radio
1986 97.191
— Rear footwell heater blower
1983-1985 97.194
— Stereo radio 1987-1989 97.195
— Stereo radio with amplified
speakers from 1988 97.197
— Stereo radio with 4 speakers
from 1990 97.246
— 450-Watt radiator cooling fan
1986-1989 97.200

1983-84 Vanagon
Waterboxer

Description	Current Track
Air flow sensor	8,9
Alternator	24-26
Alternator warning light	26
Auxiliary air regulator	13
Battery	20
Back-up light, left	55
Back-up light, right	56
Back-up light switch	55
Blower fan	105
Blower-fan control-lever light	67
Blower-fan resistance	104
Blower switch	104, 105
Brake light, left	80
Brake light, right	79
Brake-light switch	79, 80
Brake warning light	66
Cigarette lighter	70
Cigarette-lighter light	69
Clock	51
Coolant low-level-warning control unit	33, 34
Coolant low-level-warning switch	33
Coolant over-temperature warning light	34
Coolant-temperature gauge	32
Coolant-temperature sending unit	32
Defogger cut-out relay (X-contact)	91-97
Door contact/buzzer switch, left	72, 73
Door contact switch, front right	71
Door contact switch, right sliding door	84
Emergency flasher relay	56-58
Emergency-flasher switch	58-68
Emergency-flasher warning light	66
Fuel control unit	6-15
Fuel gauge	31
Fuel-gauge sending unit	31
Fuel pump	18
Fuel pump relay	18, 19
Full-throttle enrichment switch	11
Fuses (S1-S13) on fuse/relay panel	—
Hall generator	4, 5
Headlight dimmer/flasher switch	38-40
Headlight-high-beam light	36
Headlight, left	37, 39
Headlight, right	38, 40
Horn	53
Horn button	53
Idle stabilizer	4, 5
Idle switch	4, 5
Ignition coil	1-3

Description	Current Track
Ignition distributor	1-3
Ignition/starter switch	22-27
Injector cylinder 1	11
Injector cylinder 2	12
Injector cylinder 3	13
Injector cylinder 4	14
Instrument panel light	49, 50
Instrument-panel light dimmer	42
Interior light, front	81-83
Interior light, rear	84-86
License plate light	42, 43
Light switch	40-42
Oil-pressure switch (1.8 bar)	29
Oil pressure warning light	29
Oxygen sensor	7
Oxygen sensor elapsed-milage indicator light	28
Oxygen-sensor elapsed milage switch	28
Parking light, left	48
Parking light, right	41
Parking-brake warning light switch	76
Power supply relay	16, 17
Radiator fan	87
Radiator-fan relay	88-90
Radiator-fan thermoswitch I	87
Radiator-fan thermoswitch II	90
Radio connection	60, 94
Rear side-marker lights	45, 46
Rear-window defogger heater element	92
Rear-window defogger indicator light	93
Rear-window defogger switch	92
Rear-window defogger switch light	94
Seat-belt buzzer contact, left	74
Seat-belt warning light	75
Seat-belt warning relay	73, 75
Spark plugs	1-3
Spark plug connectors	1-3
Starter	22, 23
Tail light, left	47
Tail light, right	44
Temperature sensor II	6
Timing/RPM sensor	4, 5
Transistorized ignition control unit	3-6
Turn-signal indicator light	30
Turn-signal light, front-left	65
Turn-signal light, front-right	62
Turn-signal light, rear-left	64
Turn-signal light, rear-right	63
Turn-signal switch	61
Voltage regulator	24-26
Voltage stabilizer	35
Washer/wiper intermittent relay	98-100
Windshield-washer pump	96
Windshield-wiper intermittent switch	98-103
Winshield-wiper motor	100-103

Wire Connectors

- T1 — single, in engine compart, left
- T1a — single, in connector housing
- T1b — single, in connector housing
- T1c — single, near alternator in engine compart.
- T1d — single, behind dash
- T1e — single, in connector housing
- T1f — single, behind dash
- T1g — single, behind dash
- T1h — behind dash
- T1i — at roof cross-beam, rear right
- T1k — single, behind dash
- T2 — double, on fuse/relay panel
- T2a — double, behind dash
- T2b — double, behind dash
- T2c — double, behind dash
- T2d — double, behind dash
- T2e — double, in connector housing
- T2f — double, behind dash
- T2g — double, in connector housing
- T2h — double, in connector housing
- T2i — double, in connector housing
- T2k — double, behind dash
- T2l — double, below driver's seat
- T3 — 3-point, near alternator in engine compart.
- T3a — 3-point, behind dash
- T4 — 4-point, behind dash
- T4a — 4-point, behind dash
- T7 — 7-point, in connector housing
- T8 — 8-point, behind dash
- T14 — 14-point on instrument cluster

Ground Connectors

- (1) — from battery to body
- (2) — from transmission to body
- (9) — behind dash near fuse/relay panel
- (10) — behind dash
- (12) — at steering-gear housing
- (13) — behind air vent
- (14) — at rear deck
- (15) — near fuel pump at floor board/crossmember
- (17) — near ignition distributor
- (18) — left at cylinder head
- (19) — near ignition coil, in engine compart., left
- (21) — plus connection, in connector housing

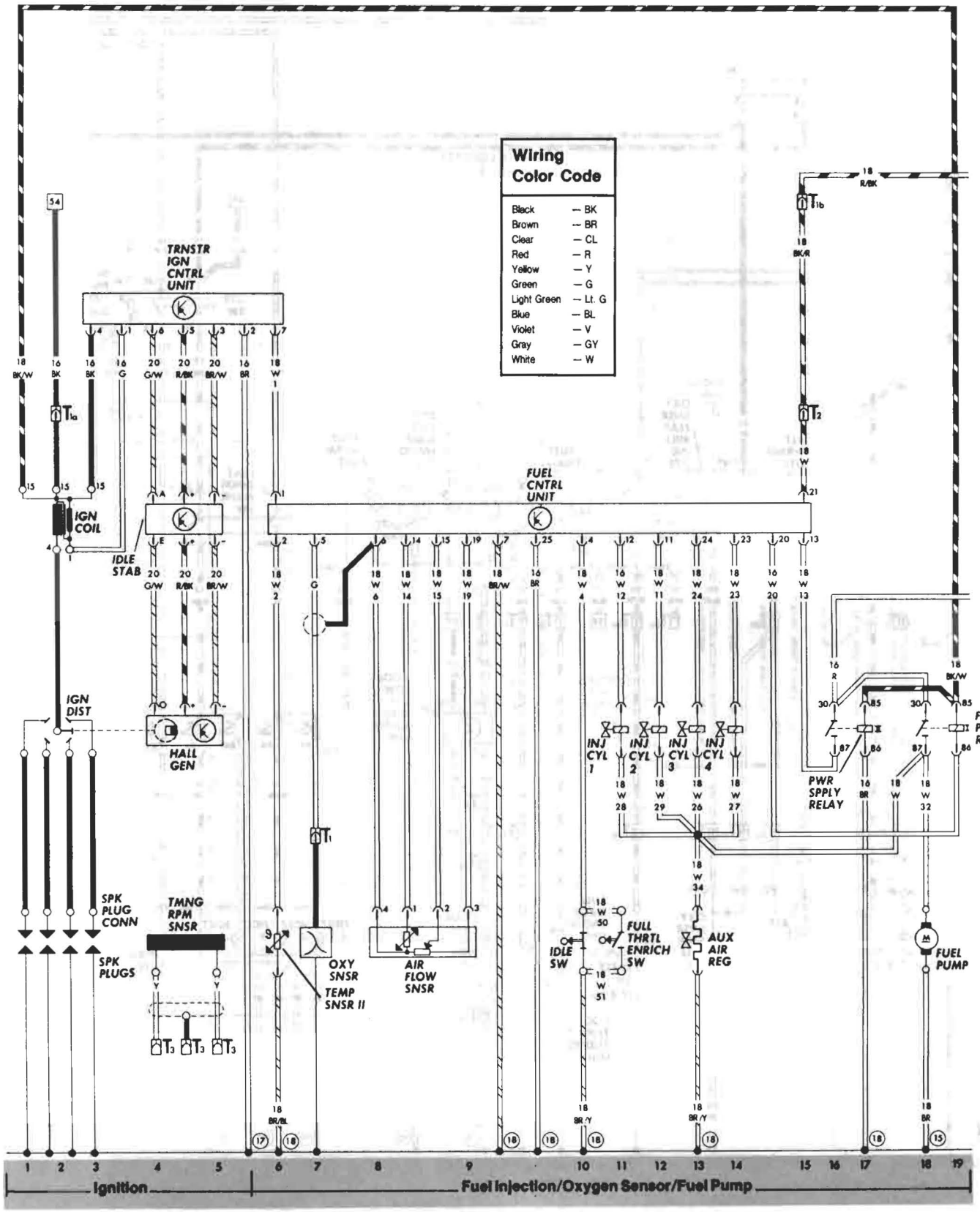

Note: All wire sizes American Wire Gauge

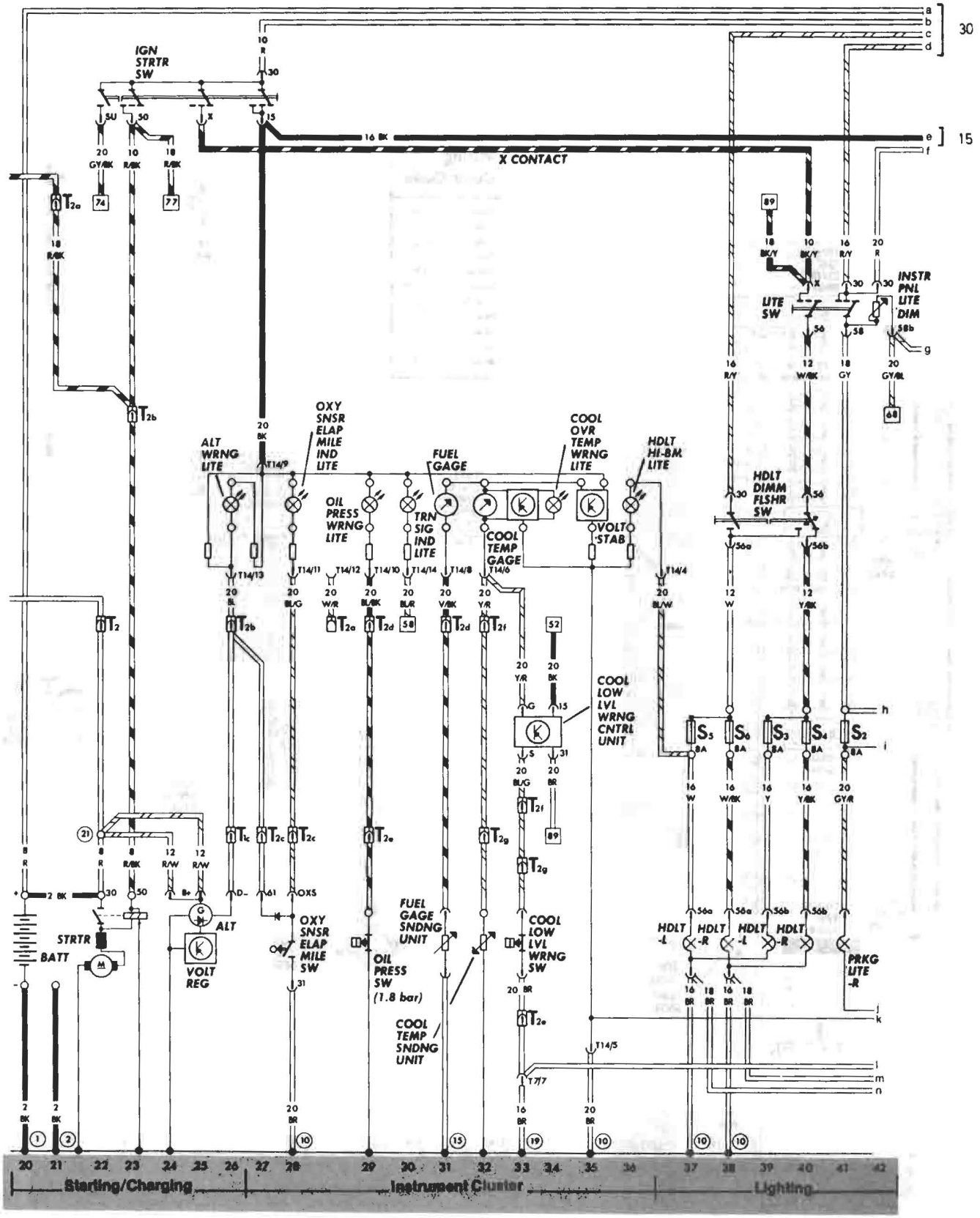
IGN STRTR SW
X CONTACT
ALT WRNG LITE
OXY SNSR ELAP MILE IND LITE
OIL PRESS WRNG LITE
TRN SIG IND LITE
FUEL GAGE
COOL TEMP GAGE
COOL OVR TEMP WRNG LITE
VOLT STAB
HDLT HI-BM LITE
HDLT DIMM FLSHR SW
LITE SW
INSTR PNL LITE DIM
COOL LOW LVL WRNG CNTRL UNIT
COOL LOW LVL WRNG SW
FUEL GAGE SNDNG UNIT
COOL TEMP SNDNG UNIT
OIL PRESS SW (1.8 bar)
OXY SNSR ELAP MILE SW
STRTR
BATT
ALT
VOLT REG
HDLT -L
HDLT -R
PRKG LITE -R
Starting/Charging
Instrument Cluster
Lighting

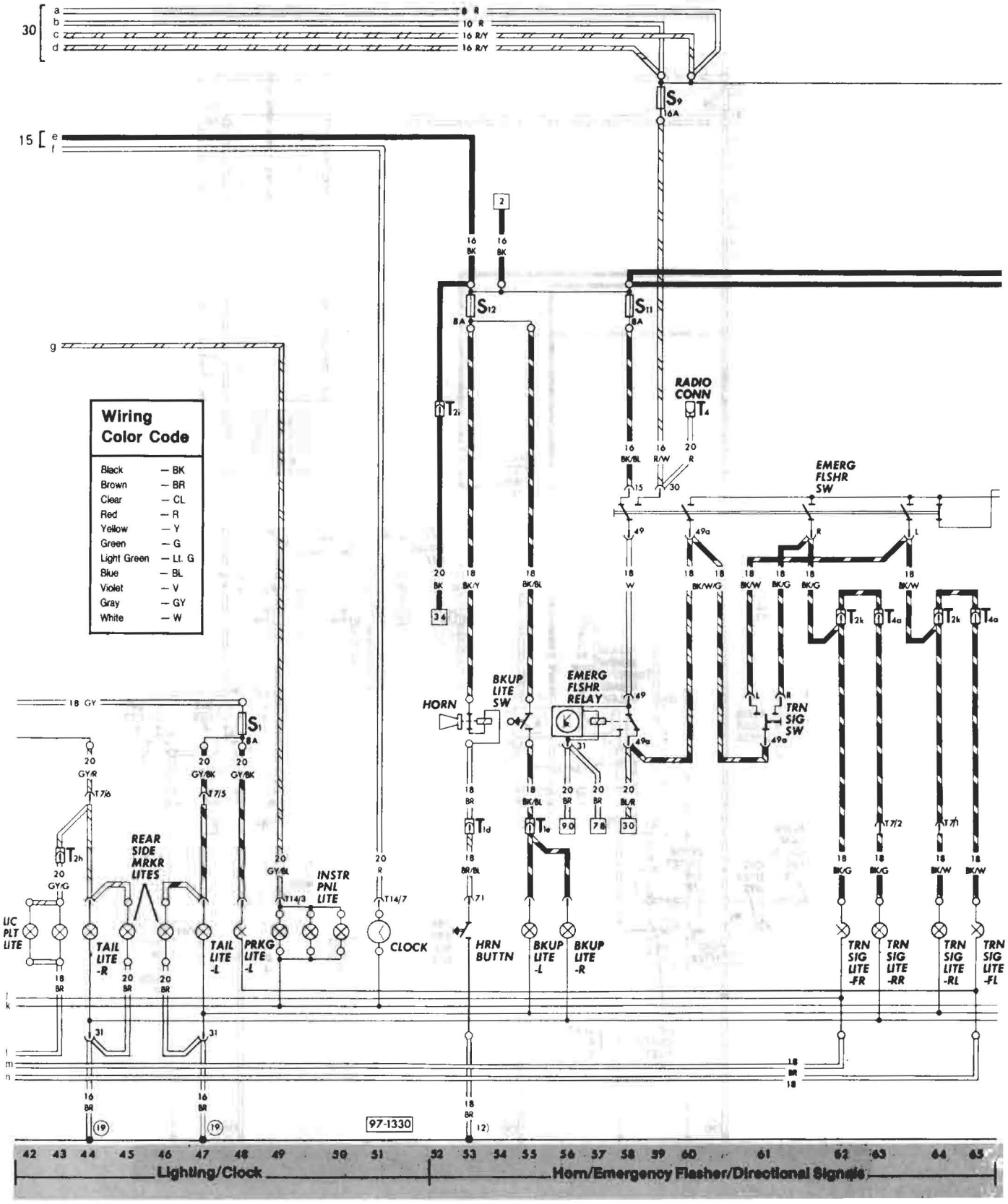

Note: All wire sizes American Wire Gauge

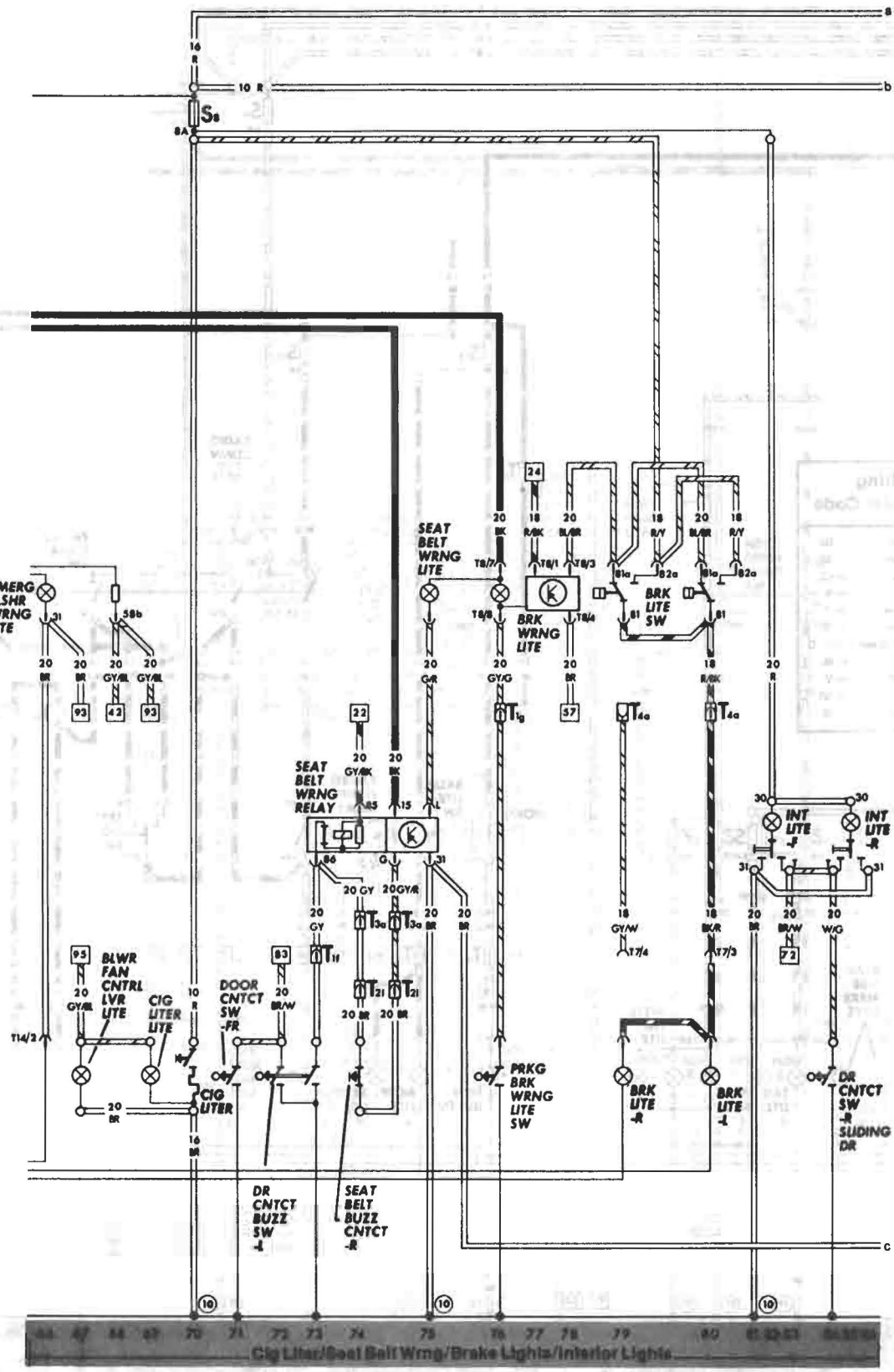
EMERG FLSHR WRNG LITE
SEAT BELT WRNG LITE
BRK WRNG LITE
BRK LITE SW
SEAT BELT WRNG RELAY
INT LITE -F
INT LITE -R
BLWR FAN CNTRL LVR LITE
CIG LITER LITE
CIG LITER
DOOR CNTCT SW -FR
DR CNTCT BUZZ SW -L
SEAT BELT BUZZ CNTCT -R
PRKG BRK WRNG LITE SW
BRK LITE -R
BRK LITE -L
DR CNTCT SW -R SLIDING DR
Cig Liter/Seat Belt Wrng/Brake Lights/Interior Lights

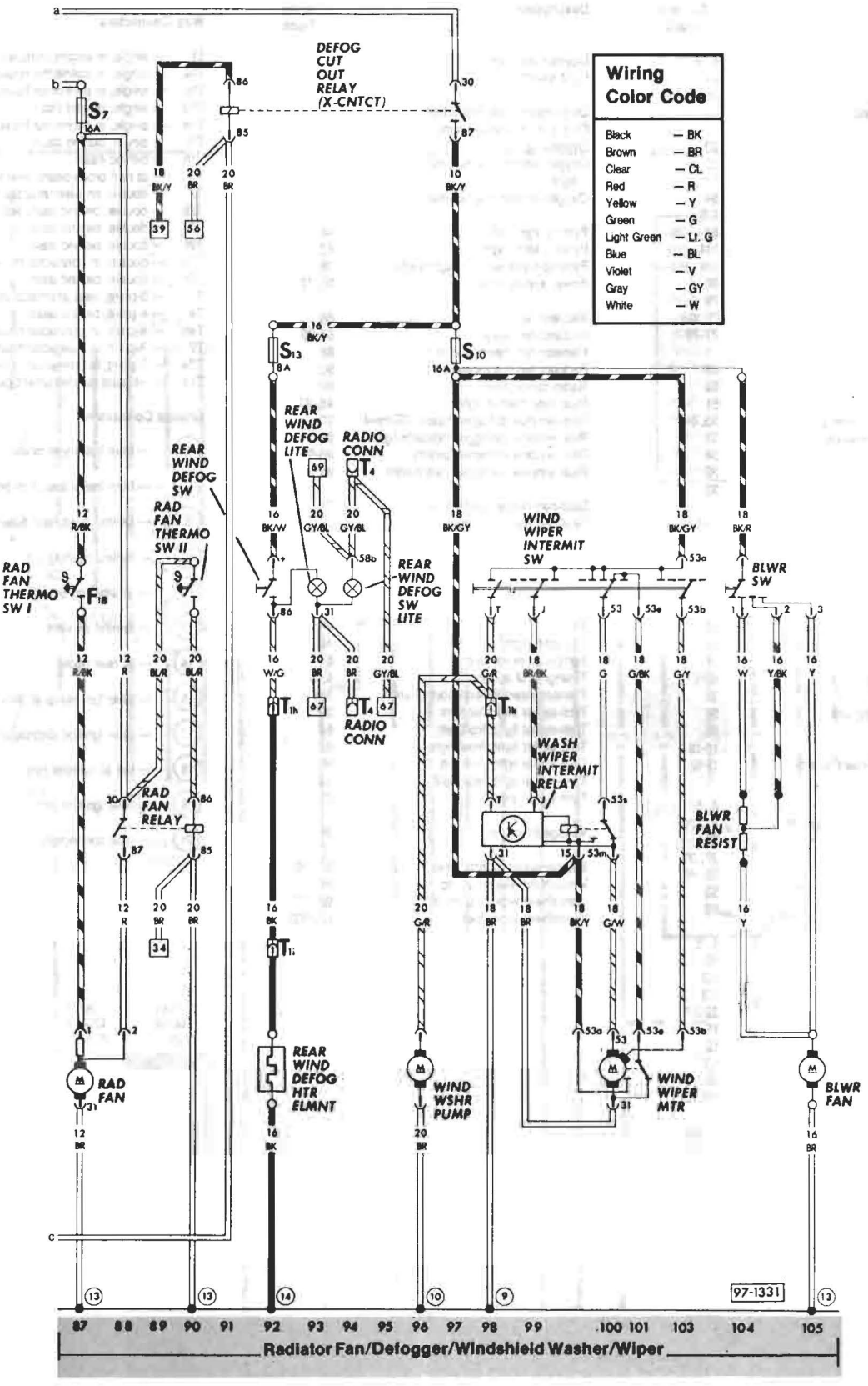

Note: All wire sizes American Wire Gauge

Description	Current Track
Air flow sensor	8, 9
Alternator	24
Alternator warning light	26
Auxiliary air regulator	13
Battery	20
Back-up light, left	55
Back-up light, right	54
Back-up light switch	54
Blower fan	105
Blower-fan control-lever light	67
Blower-fan resistance	104
Blower switch	104, 105
Brake light, left	80
Brake light, right	79
Brake light switch	79, 80
Brake warning light	77-79
Cigarette lighter	69
Cigarette-lighter light	68
Clock	51
Coolant low-level-warning control unit	33, 34
Coolant low-level-warning switch	33
Coolant over-temperature warning light	34
Coolant-temperature gauge	32
Coolant-temp. sending unit	32
Defogger cut-out relay (X-contact)	91-97
Door contact/buzzer switch, left	72, 73
Door contact switch, front right	71
Door contact switch, right sliding door	84
Emergency-flasher relay	55-57
Emergency-flasher switch	57-68
Emergency-flasher warning light	66
Fuel control unit	6-15
Fuel gauge	31
Fuel-gauge sending unit	31
Fuel pump	18
Fuel pump relay	16-19
Full-throttle enrichment switch	11-12
Hall generator	4, 5
Headlight dimmer/flasher switch	37, 39
Headlight-high-beam light	36
Headlight, left	37, 39
Headlight, right	38, 40
Horn	53
Horn button	53
Idler stabilizer	4, 5
Idle switch	10
Ignition coil	1-3
Ignition distributor	1-3
Ignition/starter switch	22-27
Injector cylinder 1	11
Injector cylinder 2	12
Injector cylinder 3	13
Injector cylinder 4	14
Instrument-panel light	49, 50
Instrument-panel light dimmer	43
Interior light, front	81-83
Interior light, rear	86, 87

Description	Current Track
License plate light	42, 43
Light switch	40-42
Oil-pressure switch (1.8 bar)	29
Oil-pressure warning light	29
Oxygen sensor	7
Oxygen-sensor elapsed-mileage indicator light	28
Oxygen-sensor elapsed-mileage switch	28
Parking light, left	48
Parking light, right	42
Parking-brake warning light switch	76
Power supply relay	16, 17
Radiator fan	88
Radiator-fan relay	88-90
Radiator-fan thermoswitch I	88
Radiator-fan thermoswitch II	90
Radio connection	60
Rear side-marker lights	46, 47
Rear-window defogger heater element	93
Rear-window defogger indicator light	94
Rear-window defogger switch	93-95
Rear-window defogger switch light	95
Seat-belt buzzer contact, left	73
Seat-belt warning light	75
Seat-belt warning relay	73, 75
Spark plugs	1-3
Spark plug connectors	1-3
Starter	20, 22
Tail light, left	48
Tail light, right	45
Temperature sensor	6
Timing/RPM sensor	4, 5
Transistorized ignition control unit	3-6
Turn-signal indicator light	30
Turn-signal light, front-left	64
Turn-signal light, front-right	62
Turn-signal light, rear-left	65
Turn-signal light, rear-right	63
Turn-signal switch	61
Voltage stabilizer	35
Washer/wiper interm. relay	98-100
Windshield-washer pump	96
Windshield-wiper interm. switch	98-103
Windshield-wiper motor	100-103

Wire Connectors

T1 — single, in engine compart., left
T1a — single, in connector housing
T1c — single, in connector housing
T1d — single, behind dash
T1e — single, in connector housing
T1f — single, behind dash
T1h — behind dash
T1i — at roof cross-beam, rear left
T2 — double, on fuse/relay panel
T2b — double, behind dash, left
T2c — double, behind dash
T2f — double, behind dash
T2h — double, in connector housing
T2i — double, behind dash
T3 — 3-point, near alternator in engine compart.
T4 — 4-point, behind dash
T4b — 4-point, in connector housing
T7 — 7-point, in connector housing
T7a — 7-point, in connector housing
T14 — 14-point on instrument cluster

Ground Connectors

(1) — from battery to body
(2) — from transmission to body
(9) — behind dash near fuse/relay panel
(10) — behind dash
(12) — at steering-gear housing
(13) — behind air vent
(14) — at rear deck
(15) — near fuel pump at floor board/crossmember
(17) — near ignition distributor
(18) — left at cylinder head
(19) — near ignition coil, in engine compart., left
(21) — plus connection, in connector housing

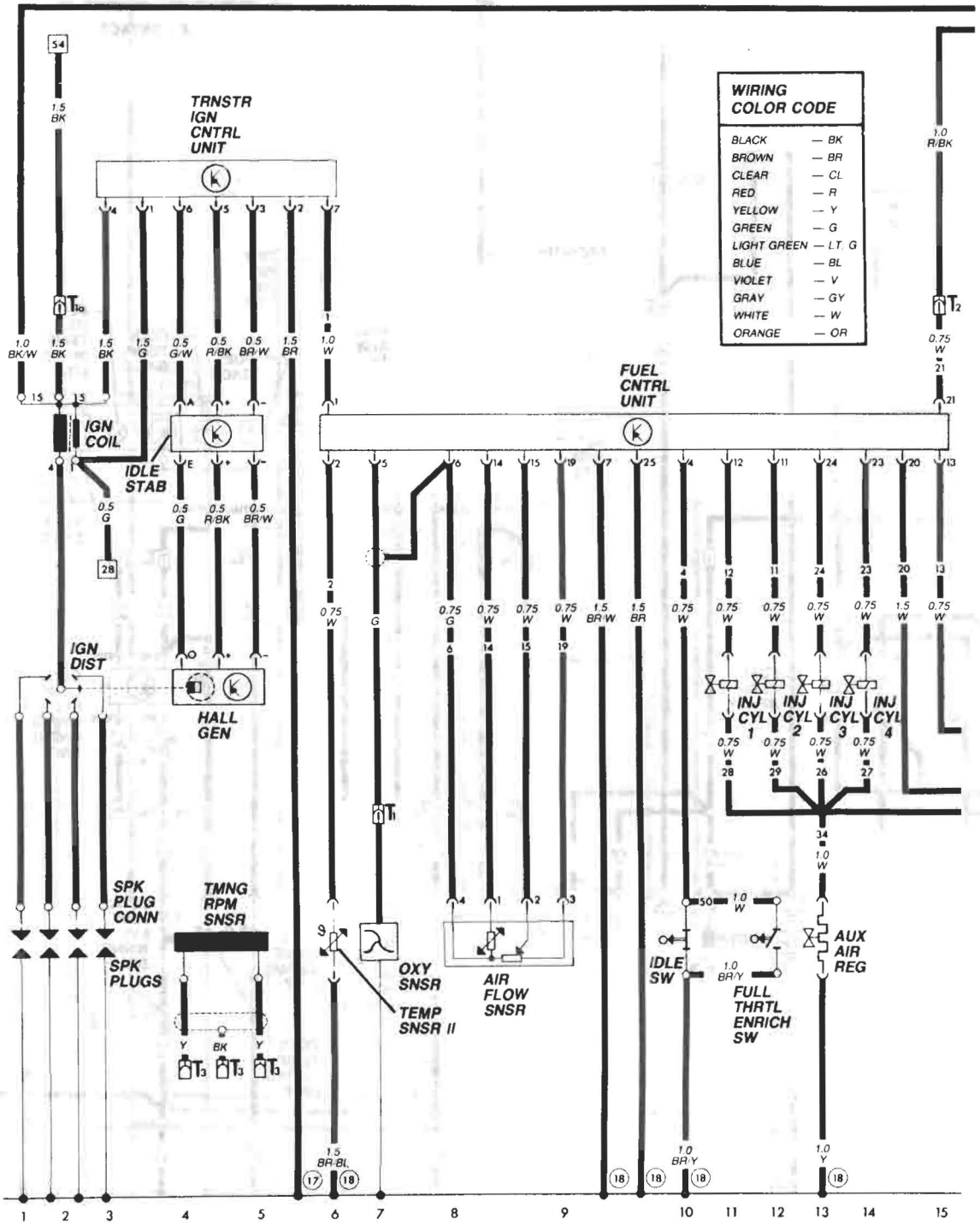

Water-cooled—Digijet 1985

Main wiring diagram **97.61**

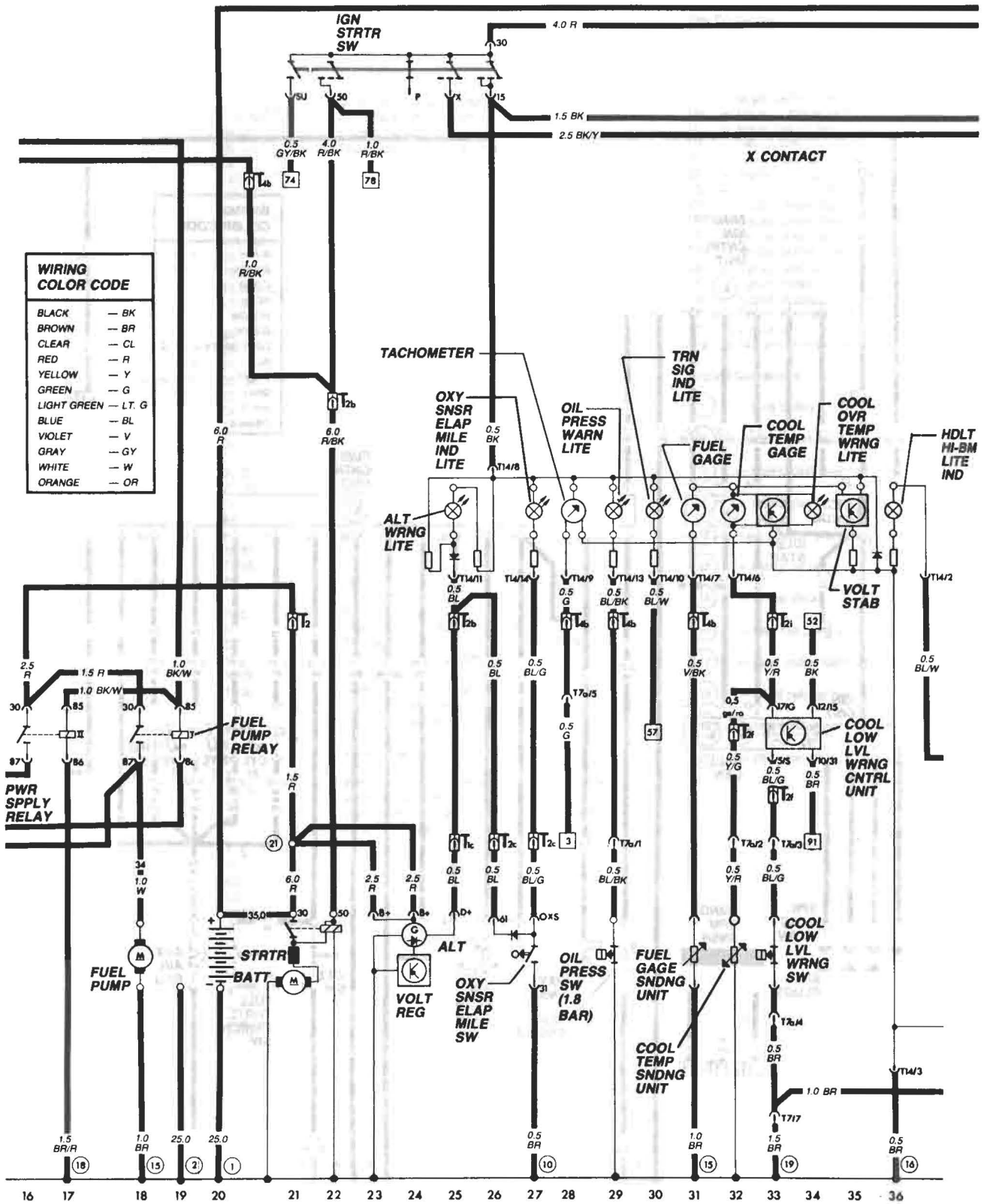
IGN STRTR SW
4.0 R
30
50
P
X
15
1.5 BK
2.5 BK/Y
X CONTACT
0.5 GY/BK
4.0 R/BK
1.0 R/BK
74
78
WIRING COLOR CODE
BLACK — BK
BROWN — BR
CLEAR — CL
RED — R
YELLOW — Y
GREEN — G
LIGHT GREEN — LT. G
BLUE — BL
VIOLET — V
GRAY — GY
WHITE — W
ORANGE — OR
TACHOMETER
OXY SNSR ELAP MILE IND LITE
OIL PRESS WARN LITE
TRN SIG IND LITE
FUEL GAGE
COOL TEMP GAGE
COOL OVR TEMP WRNG LITE
HDLT HI-BM LITE IND
ALT WRNG LITE
VOLT STAB
FUEL PUMP RELAY
PWR SPPLY RELAY
COOL LOW LVL WRNG CNTRL UNIT
FUEL PUMP
STRTR
BATT
ALT
VOLT REG
OXY SNSR ELAP MILE SW
OIL PRESS SW (1.8 BAR)
FUEL GAGE SNDNG UNIT
COOL TEMP SNDNG UNIT
COOL LOW LVL WRNG SW
16 17 18 19 20 21 22 23 24 25 26 27 28 29 30 31 32 33 34 35 36

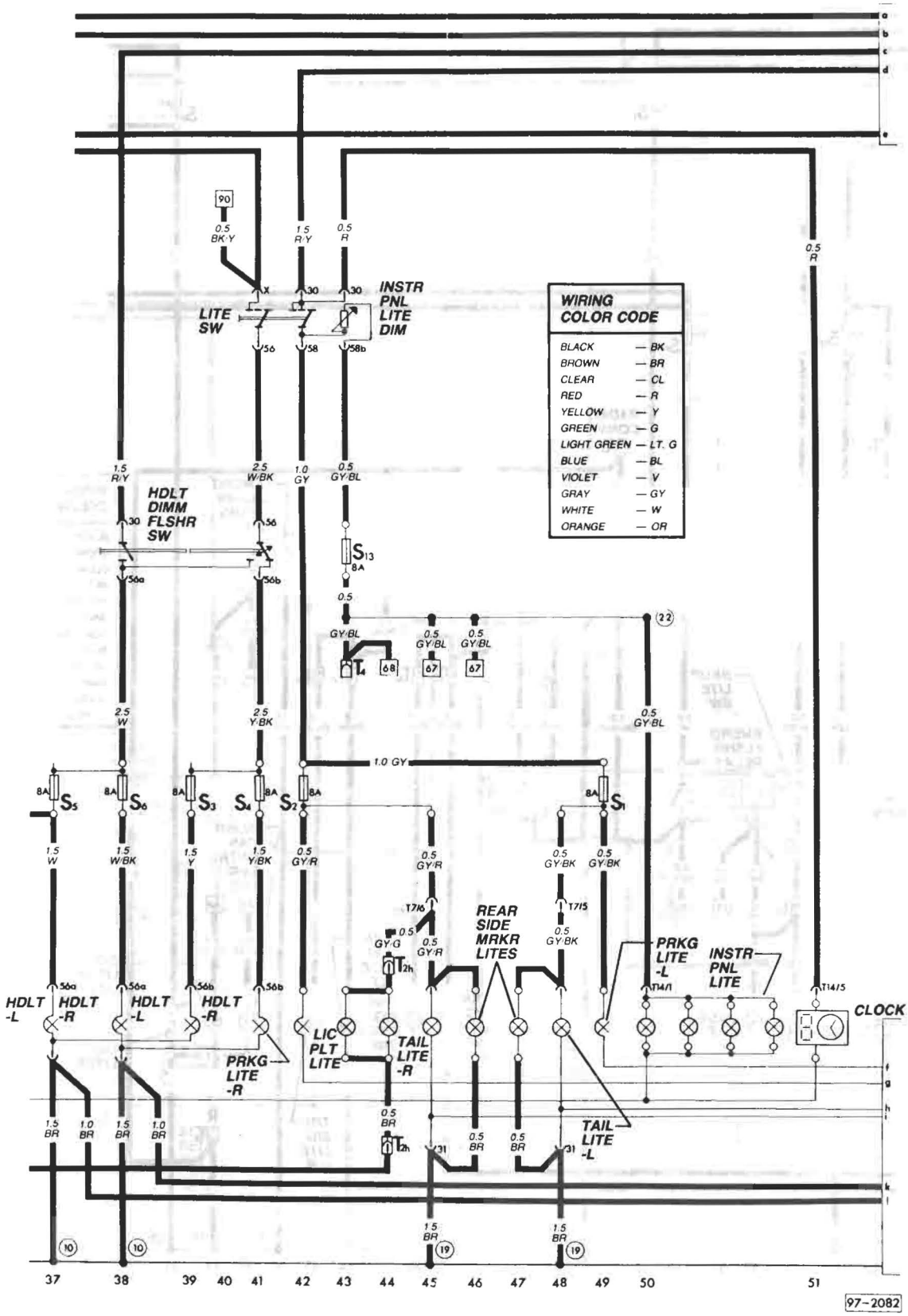
WIRING COLOR CODE
BLACK — BK
BROWN — BR
CLEAR — CL
RED — R
YELLOW — Y
GREEN — G
LIGHT GREEN — LT. G
BLUE — BL
VIOLET — V
GRAY — GY
WHITE — W
ORANGE — OR
INSTR PNL LITE DIM
LITE SW
HDLT DIMM FLSHR SW
REAR SIDE MRKR LITES
PRKG LITE -L
INSTR PNL LITE
CLOCK
HDLT -L
HDLT -R
PRKG LITE -R
LIC PLT LITE
TAIL LITE -R
TAIL LITE -L
97-2082

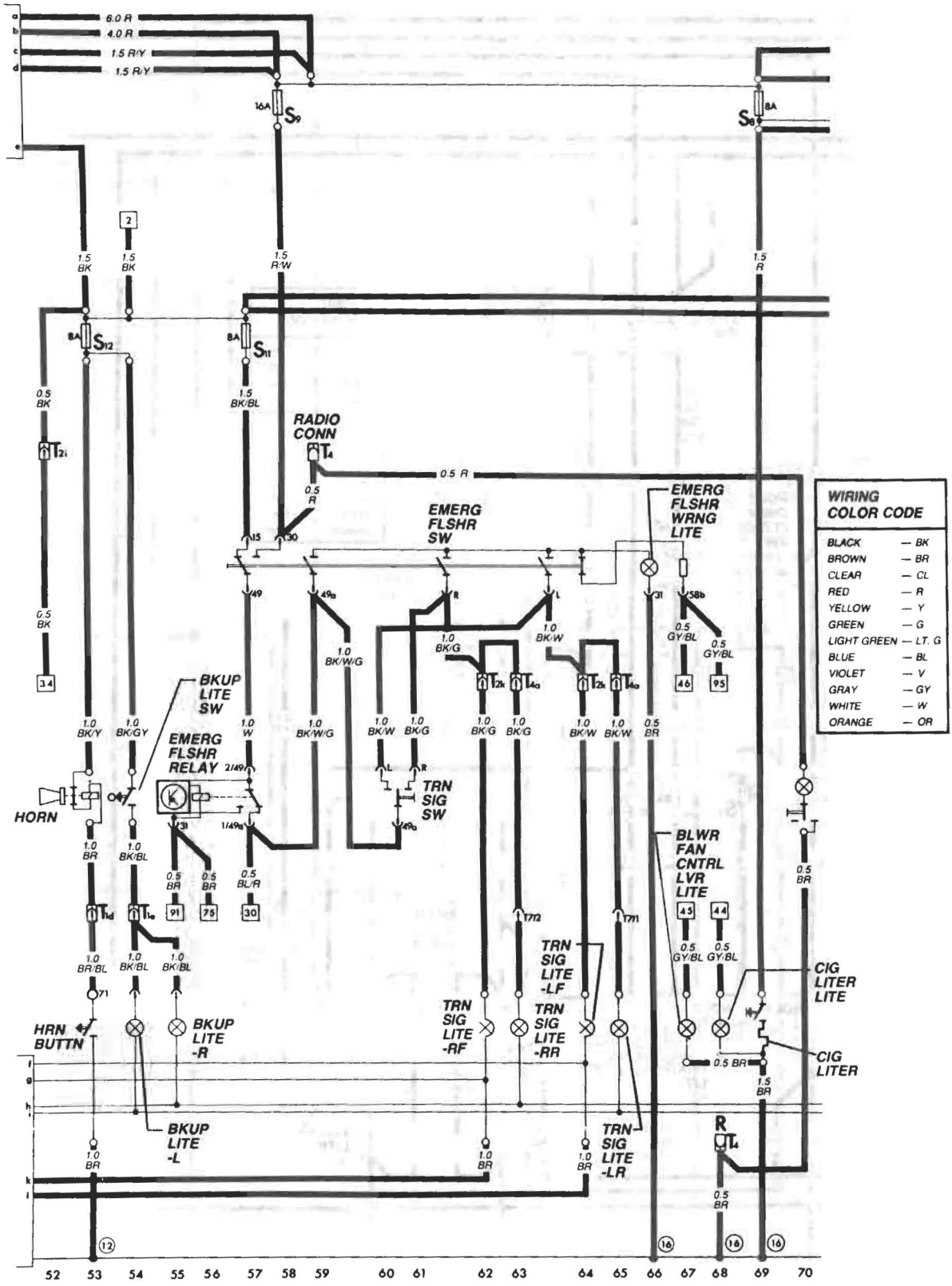
6.0 R
4.0 R
1.5 R/Y
1.5 R/Y
16A
S9
8A
S8
2
1.5 BK
1.5 BK
1.5 R/W
1.5 R
8A
S12
8A
S11
0.5 BK
1.5 BK/BL
RADIO CONN
T4
0.5 R
0.5 R
EMERG FLSHR SW
EMERG FLSHR WRNG LITE
0.5 BK
49
49a
1.0 BK/W/G
1.0 BK/G
1.0 BK/W
0.5 GY/BL
0.5 GY/BL
34
46
95
BKUP LITE SW
1.0 BK/Y
1.0 BK/GY
1.0 W
1.0 BK/W/G
1.0 BK/W
1.0 BK/G
1.0 BK/G
1.0 BK/W
1.0 BK/W
0.5 BR
EMERG FLSHR RELAY
2/49
HORN
TRN SIG SW
1/49a
49b
1.0 BR
1.0 BK/BL
0.5 BR
0.5 BR
0.5 BL/R
BLWR FAN CNTRL LVR LITE
91
75
30
43
44
T7/2
T7/1
1.0 BR/BL
1.0 BK/BL
1.0 BK/BL
0.5 GY/BL
0.5 GY/BL
71
TRN SIG LITE -LF
CIG LITER LITE
HRN BUTTN
BKUP LITE -R
TRN SIG LITE -RF
TRN SIG LITE -RR
0.5 BR
CIG LITER
1.5 BR
BKUP LITE -L
TRN SIG LITE -LR
R
1.0 BR
1.0 BR
1.0 BR
0.5 BR
12
16
16
16
52 53 54 55 56 57 58 59 60 61 62 63 64 65 66 67 68 69 70
WIRING COLOR CODE
BLACK — BK
BROWN — BR
CLEAR — CL
RED — R
YELLOW — Y
GREEN — G
LIGHT GREEN — LT. G
BLUE — BL
VIOLET — V
GRAY — GY
WHITE — W
ORANGE — OR

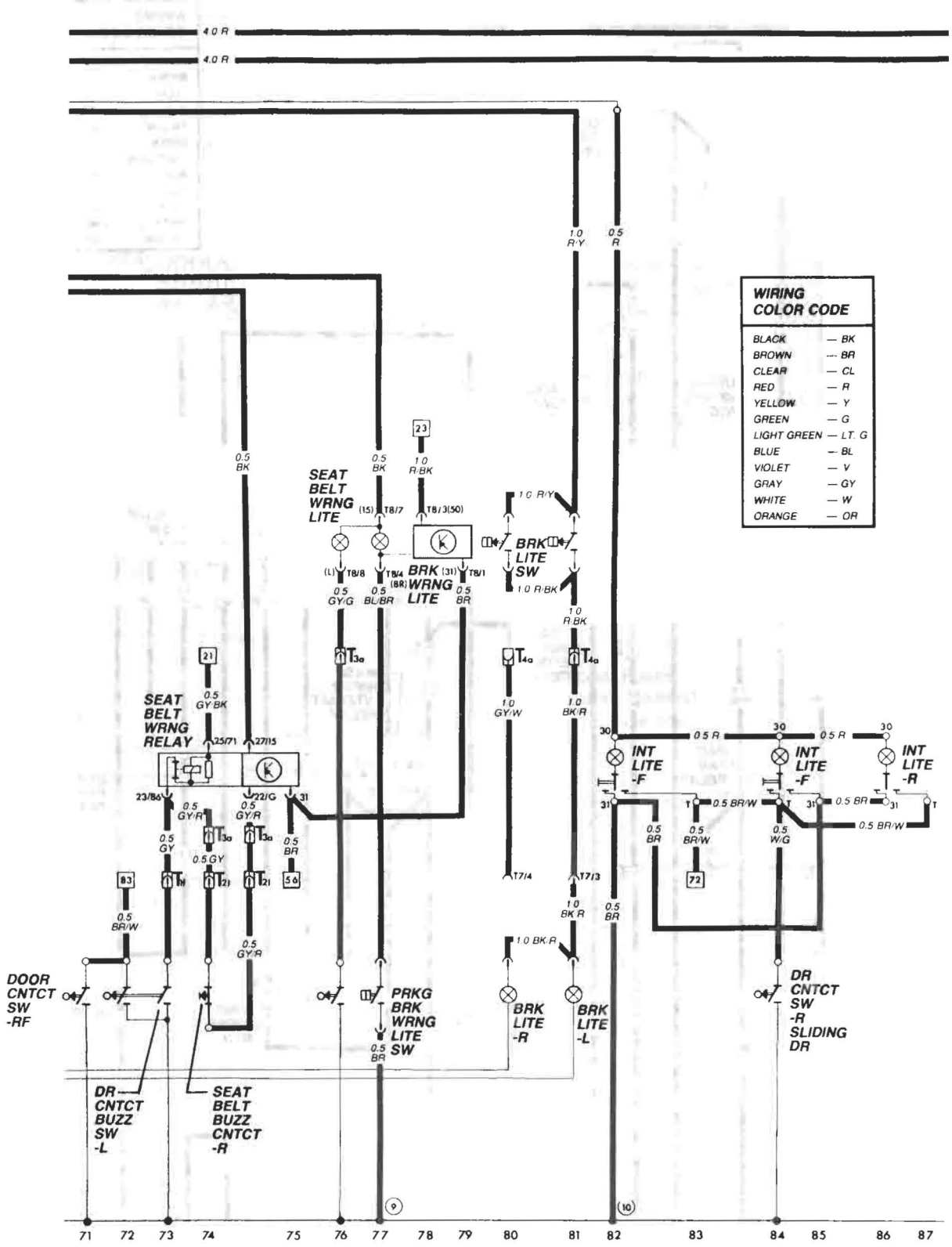
4.0 R
4.0 R
WIRING COLOR CODE
BLACK — BK
BROWN — BR
CLEAR — CL
RED — R
YELLOW — Y
GREEN — G
LIGHT GREEN — LT. G
BLUE — BL
VIOLET — V
GRAY — GY
WHITE — W
ORANGE — OR
SEAT BELT WRNG LITE
BRK WRNG LITE
BRK LITE SW
SEAT BELT WRNG RELAY
INT LITE -F
INT LITE -F
INT LITE -R
DOOR CNTCT SW -RF
DR CNTCT BUZZ SW -L
SEAT BELT BUZZ CNTCT -R
PRKG BRK WRNG LITE SW
BRK LITE -R
BRK LITE -L
DR CNTCT SW -R SLIDING DR
71 72 73 74 75 76 77 78 79 80 81 82 83 84 85 86 87

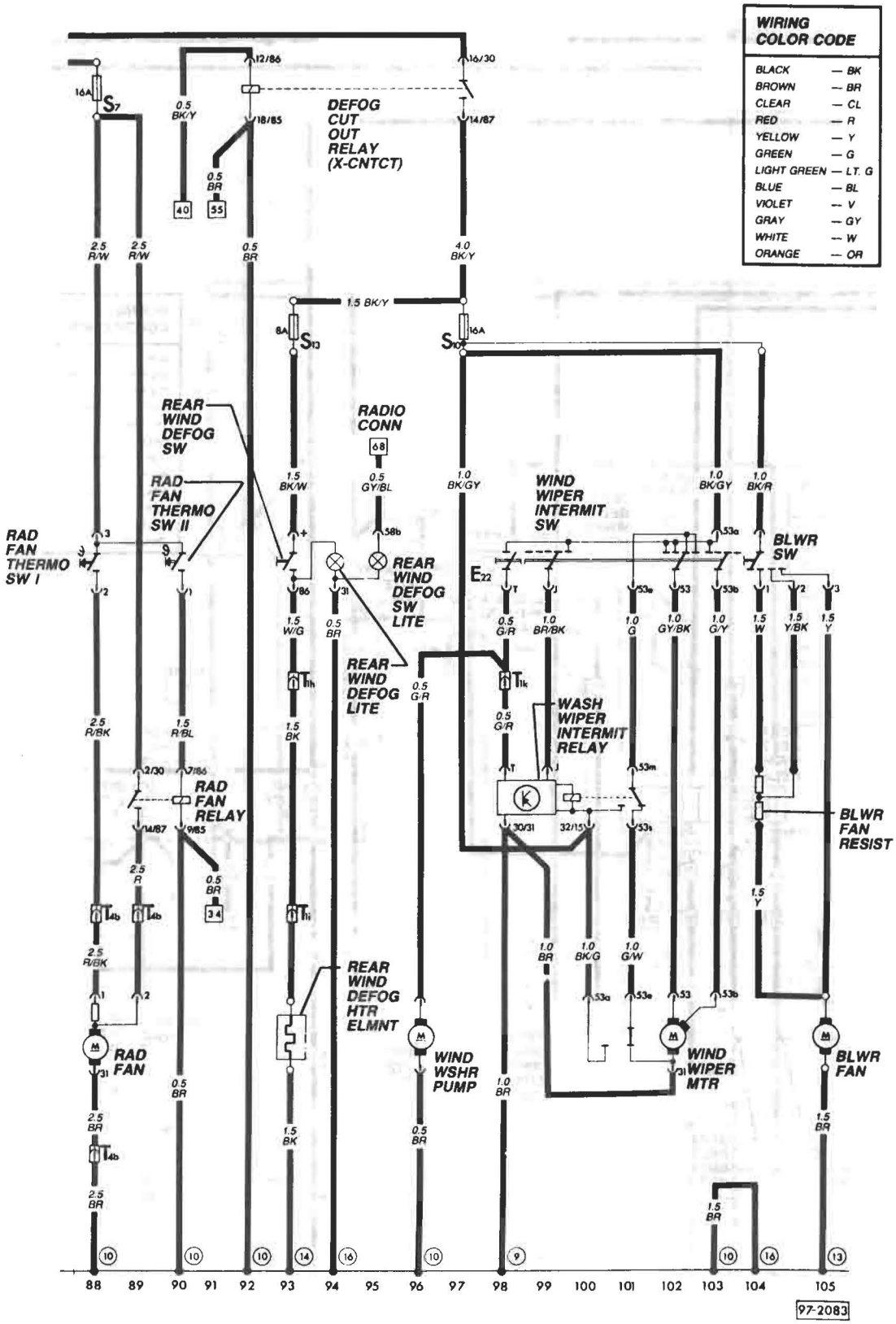
WIRING COLOR CODE
BLACK — BK
BROWN — BR
CLEAR — CL
RED — R
YELLOW — Y
GREEN — G
LIGHT GREEN — LT. G
BLUE — BL
VIOLET — V
GRAY — GY
WHITE — W
ORANGE — OR
DEFOG CUT OUT RELAY (X-CNTCT)
REAR WIND DEFOG SW
RAD FAN THERMO SW II
RAD FAN THERMO SW I
RADIO CONN
REAR WIND DEFOG SW LITE
REAR WIND DEFOG LITE
WIND WIPER INTERMIT SW
BLWR SW
WASH WIPER INTERMIT RELAY
RAD FAN RELAY
BLWR FAN RESIST
REAR WIND DEFOG HTR ELMNT
RAD FAN
WIND WSHR PUMP
WIND WIPER MTR
BLWR FAN
88 89 90 91 92 93 94 95 96 97 98 99 100 101 102 103 104 105
97-2083

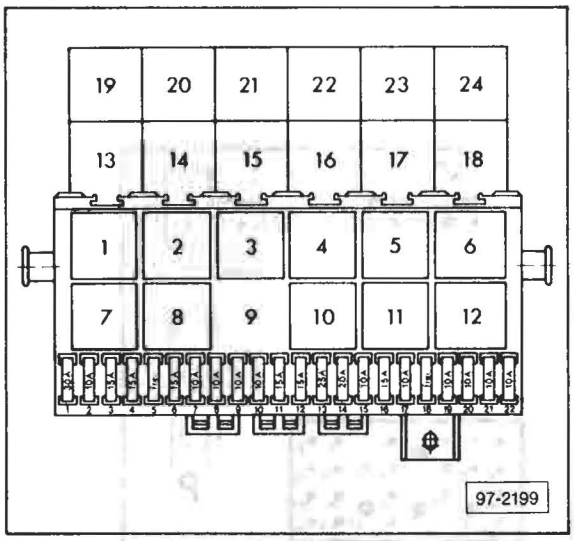

Fuse/Relay Panel

3 — coolant level control unit
5 — rad. cool. fan relay, 2nd stage
8 — load reduction relay
10 — intermitt. wash/wiper relay
11 — rear window wash/wiper relay
12 — emerg. flash/turn sig. relay

CAUTION

Relay locations are subject to change and may vary from vehicle to vehicle depending on options.

Use extreme care when troubleshooting the electrical system.

If you encounter problems identifying a particular relay, consult your Parts Department.

Fuse Arrangement

according to numbers on fuse panel as seen from left to right:

No.	Component	Amp.
1	Radiator fan	30
2	Brake lights	10
3	Interior lights, illuminated Make-up mirror, clock	15
4	Emergency flasher system	15
5	Vacant	
6	Vacant	
7	Tail and side light left	10
8	Tail and side light right	10
9	High beam right	10
10	High beam left	10
11	Windshield washer	15
12	Rear wiper, Cruise control system	15
13	Rear window heating, fresh air fan	25
14	Auxiliary heat exchanger, light for lighting switch	20
15	Back-up lights	10
16	Double tone horn	15
17	Windshield wiper	10
18	Brake warning light, heated driver's seat	10
19	Turn signals	10
20	Number plate light, headlight washer	10
21	Low beam right	10
22	Low beam left	10

Additional Fuses
(in separate holders)
above the fuse box:

Instrument lighting	10
Overheating fuse for auxiliary heater	10
Main fuse for auxiliary heater	20
Emergency horn system	15
Central locking	20
Automatic fuse for power windows	20

Fuse/relay panel, rear view

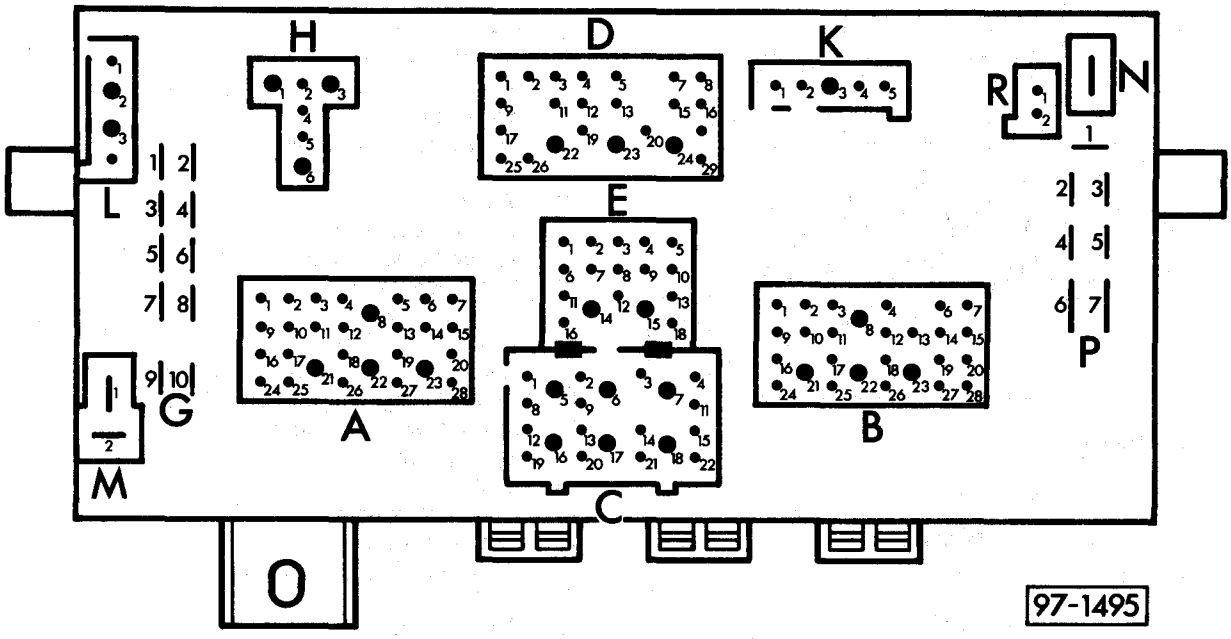

A — multi-point connector (blue) for instrument panel wiring harness
B — multi-point connector (red) for instrument panel wiring harness
C — multi-point connector (yellow) for front wiring harness
D — multi-point connector (white) for windshield wiper harness and main wiring harness
E — multi-point connector (black) for main wiring harness
F — single connector
H — multi-point connector (brown), relay connections for rad. cool. fan, 2nd stage
K — multi-point connector (colorless), connectors for low coolant warning control unit
L — multi-point connector (gray), horn connections
M — multi-point connector (black), open terminal (used for light switch terminal 56) and switch for hand operated brights and dimmers terminal 56b
N — single plug
P — single plug — terminal 30
R — open

CAUTION

Relay locations are subject to change and may vary from vehicle to vehicle depending on options.

Use extreme care when troubleshooting the electrical system.

If you encounter problems identifying a particular relay, consult your Parts Department.

Description	Current Track
Air flow sensor	21-22
Alternator	5-7
Alt. warn. lite	46
Back-up lite, L	118
Back-up lite, R	117
Back-up lite switch	118
Battery	1
Brake fluid level switch	130
Brake lite, L	116
Brake lite, R	115
Brake lite switch	113-114
Brake/park brake warn. lite	128-130
Cigar lighter	65
Cigar lighter lite	66
Clock	47
Clock lite	54
Coolant low-level control unit	61-62
Coolant low-level switch	61-62
Coolant temp. gauge	58
Coolant temp. sender	73
Coolant temp. warn. lite	59
Digifant control unit	16-26
Door contact sw., LF	123-124
Door contact sw., RF	122
Emerg. flasher relay	102-103
Emerg. flasher switch	100-107
Eng. oil press. control unit	49, 50
Eng. oil press. sw. (0.3 bar)	42
Eng. oil press. sw. (0.9 bar)	41
Fresh air control lvr. lite	134
Fresh air fan	135
Fresh air fan switch	135-136
Fuel enrich switch	19
Fuel inj. cyl. 1	26
Fuel inj. cyl. 2	27
Fuel inj. cyl. 3	28
Fuel inj. cyl. 4	29
Fuel gauge	57
Fuel gauge sender	64
Fuel pump	30
Hall generator	17-18
Headlite flash/dim sw.	92-93
Headlite, hi-beam ind.	56
Headlite, hi-beam, left	87
Headlite, hi-beam, right	99
Headlite, left	88-89
Headlite, right	97-98
Heater fan	142
Heater switch	142-143
Heater switch lite	141
Horn	121
Horn button	119
Idle stab. control unit	32-36
Idle stab. valve	34-35
Idle switch	18
Ign. coil	14-15
Ign. distributor	13-14

Description	Current Track
Ign./start sw.	9-12
Inst. panel lite dimmer	83-84
Inst. panel lites	52-53
Interior lite, front	69-70
Interior lite, rear	72
License plate lites	85-86
Lite switch	74-83
Load reduction relay	76-78
Make-up mirror lite	68
OXS/CAT elapsed mile counter	40
OXS ind. lite	46
OXS sensor with heater	24-25
Park brake lite sw.	128
Park lite, left	90
Park lite, right	96
Power steer. press. sw.	32
Rad. cool fan	137
Rad. cool fan relay 2nd stage	139-141
Rad. cool fan thermoswitch	137-138
Radio connections	67-68
Rear defogg. heat element	123
Rear defogg. ind. lite	132
Rear defogg. sw.	133
Rear defogg. sw. lite	131
Rear washer motor	151
Rear wiper motor	153-154
Rear wiper/washer relay	152-153
Seat belt switch, LF	125-126
Seat belt warn. lite	127
Seat belt warn. relay	124-128
Series resist. for fresh air fan	136
Series resist. for heater fan	143
Side marker lites, rear	94
Spark plug connectors	13-14
Spark plugs	13-14
Starter	3-4
Tachometer	48
Tail lite, left	91
Tail lite, right	95
TDC sensor	37-38
Temp. sensor II	20
Turn sig. ind.	55
Turn sig. lite, LF	110
Turn sig. lite, LR	109
Turn sig. lite, RF	112
Turn sig. lite, RR	111
Voltage regulator	5-7
Voltage stabilizer	57
Washer motor	150
Wash/wipe intermitt. relay	147-149
Wash/wiper intermitt. switch	146-149
Wiper motor	150

Wire connectors

T1 — single, in eng. compart., left
T1a — single, in eng. compart., left
T1b — single, in wire distributor box

Wire Connectors

T1c — single, in eng. compart., left
T1d — single, in wire distributor box
T1e — single, in eng. compart., middle
T1f — single, under instrument panel
T1k — single, in eng. compart., middle
T2 — double, under driver's seat
T2a — double, in eng. compart., left
T2b — double, in the relay panel
T2c — double, under instrument panel, left
T2d — double, in upper right "A" pillar
T2e — double, in rear deck lid
T2f — double, behind RR side trim panel
T2j — double, under instrument panel, left
T2i — double, in wire distributor box
T2m — double, in the relay panel
T3 — three point, in eng. compart. on alternator
T3a — three point, under instrument panel
T3b — three point, behind upper air intake flap (near radiator)
T3c — three point, behind instrument panel
T3d — three point, behind "C" pillar cover
T4 — four point, under instrument panel
T4a — four point, on series resistor for heater fan, under rear seat
T7/ — seven point, in wire distributor box
T7a/ — seven point, in wire distributor box
T8 — eight point, on brake warning indicator
T14/ — 14 point, on instrument cluster

Ground connections

(6) — under rear bench seat
(7) — on steering gear box
(8) — under instrument panel near relay panel
(9) — on rear deck lid
(10) — under instrument panel near relay panel
(11) — on rear deck lid
(12) — on left front crossmember
(13) — on rear washer fluid bracket
(15) — in eng. compart. under ign. coil
(18) — on sheet metal bracket near fuel pump
(19) — on left side of cylinder head
(20) — in instrument panel wiring harness
(25) — in Digifant wiring harness

Welded wiring points (+)

(22) — terminal 58b in inst. panel wiring harness
(21) — + connection bolted to wire distributor box

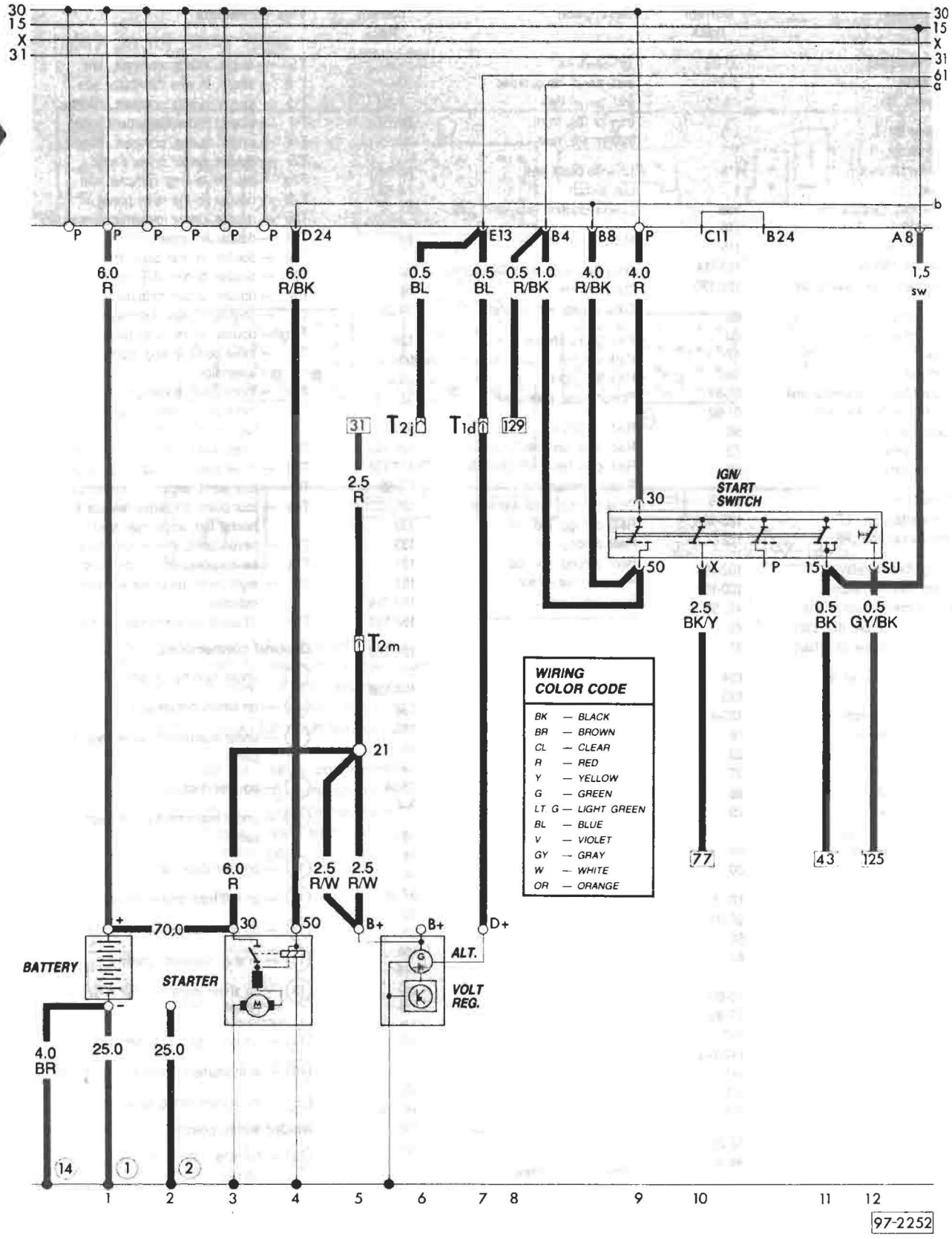
30
15
X
31
61
a
b
P
D24
E13
B4
B8
C11
B24
A8
6.0 R
6.0 R/BK
0.5 BL
0.5 BL
0.5 R/BK
1.0 R/BK
4.0 R/BK
4.0 R
1,5 sw
31
T2j
T1d
129
2.5 R
T2m
21
IGN/ START SWITCH
30
50
X
P
15
SU
2.5 BK/Y
0.5 BK
0.5 GY/BK
77
43
125
WIRING COLOR CODE
BK — BLACK
BR — BROWN
CL — CLEAR
R — RED
Y — YELLOW
G — GREEN
LT G — LIGHT GREEN
BL — BLUE
V — VIOLET
GY — GRAY
W — WHITE
OR — ORANGE
6.0 R
2.5 R/W
2.5 R/W
70,0
30
50
B+
B+
D+
BATTERY
STARTER
ALT.
VOLT REG.
4.0 BR
25.0
25.0
14
1
2
1
2
3
4
5
6
7
8
9
10
11
12
97-2252

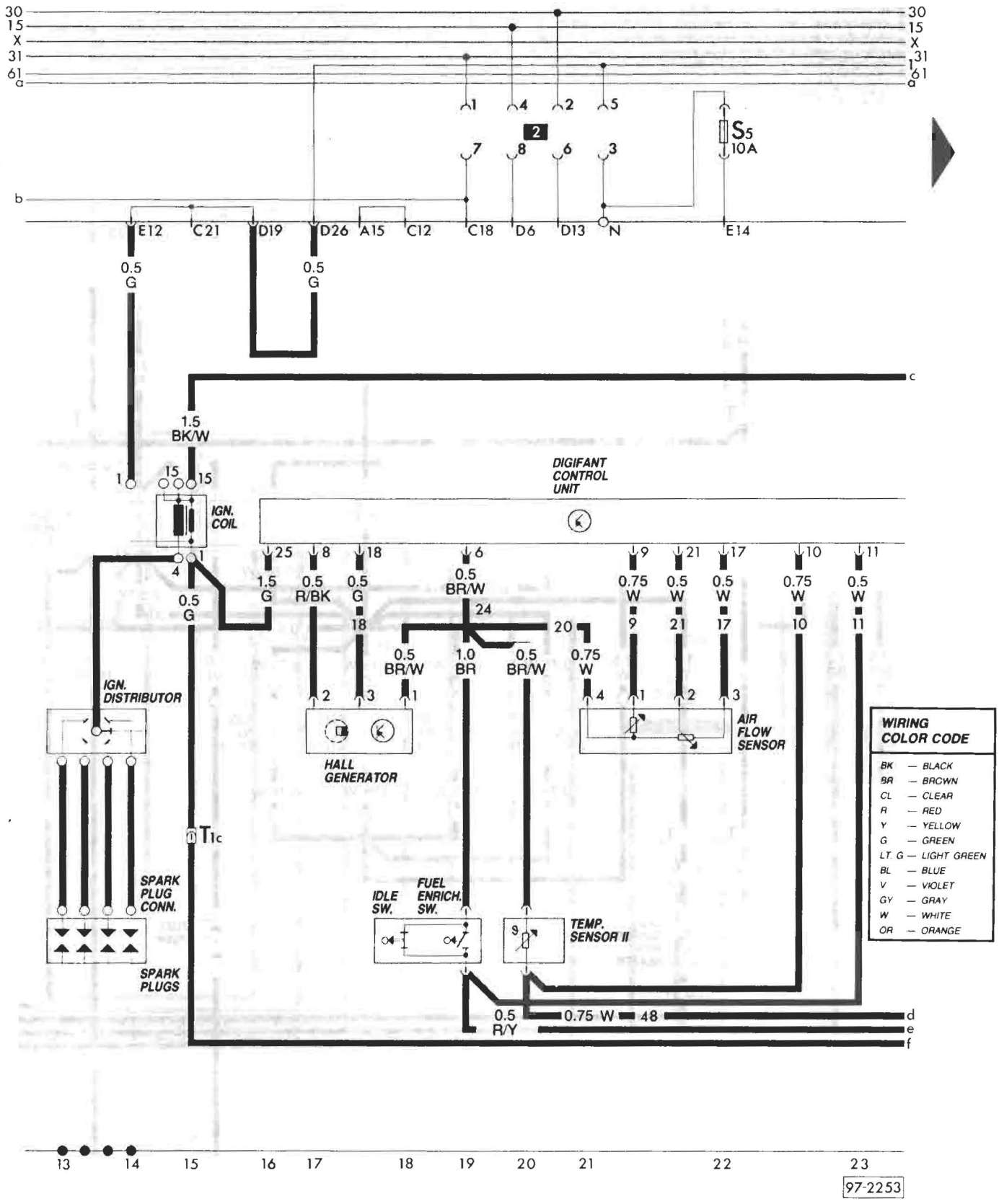
30
15
X
31
61
a
b
c
d
e
f
S5
10A
2
E12
C21
D19
D26
A15
C12
C18
D6
D13
N
E14
0.5 G
1.5 BK/W
IGN. COIL
DIGIFANT CONTROL UNIT
1.5 G
0.5 R/BK
0.5 G
0.5 BR/W
0.75 W
0.5 W
0.5 W
0.75 W
0.5 W
0.5 BR/W
1.0 BR
0.5 BR/W
0.75 W
IGN. DISTRIBUTOR
HALL GENERATOR
AIR FLOW SENSOR
T1c
SPARK PLUG CONN.
SPARK PLUGS
IDLE SW.
FUEL ENRICH. SW.
TEMP. SENSOR II
0.5 R/Y
0.75 W
48
WIRING COLOR CODE
BK — BLACK
BR — BROWN
CL — CLEAR
R — RED
Y — YELLOW
G — GREEN
LT. G — LIGHT GREEN
BL — BLUE
V — VIOLET
GY — GRAY
W — WHITE
OR — ORANGE
13
14
15
16
17
18
19
20
21
22
23
97-2253

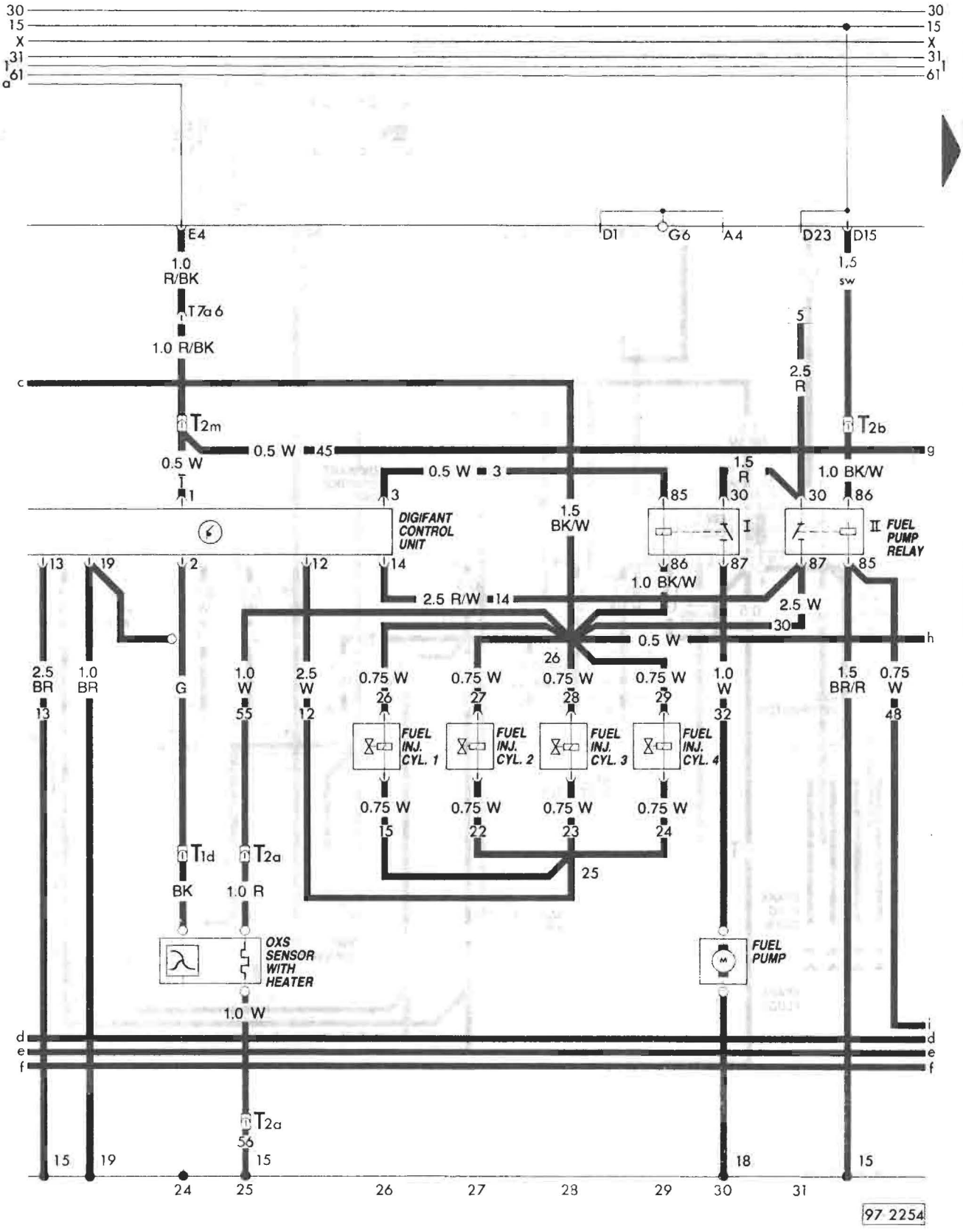
30
15
X
31
61
E4
1.0 R/BK
T7a 6
1.0 R/BK
D1
G6
A4
D23
D15
1.5 sw
5
2.5 R
T2m
T2b
0.5 W
45
0.5 W
3
1.5 R
1.0 BK/W
1
3
85
30
30
86
DIGIFANT CONTROL UNIT
1.5 BK/W
I
II FUEL PUMP RELAY
13
19
2
12
14
86
87
87
85
1.0 BK/W
2.5 R/W
14
2.5 W
30
0.5 W
26
2.5 BR
1.0 BR
G
1.0 W
2.5 W
0.75 W
0.75 W
0.75 W
0.75 W
1.0 W
1.5 BR/R
0.75 W
13
55
12
26
27
28
29
32
48
FUEL INJ. CYL. 1
FUEL INJ. CYL. 2
FUEL INJ. CYL. 3
FUEL INJ. CYL. 4
0.75 W
0.75 W
0.75 W
0.75 W
15
22
23
24
25
T1d
T2a
BK
1.0 R
OXS SENSOR WITH HEATER
FUEL PUMP
1.0 W
T2a
56
15
19
24
25
26
27
28
29
30
31
18
15
97 2254

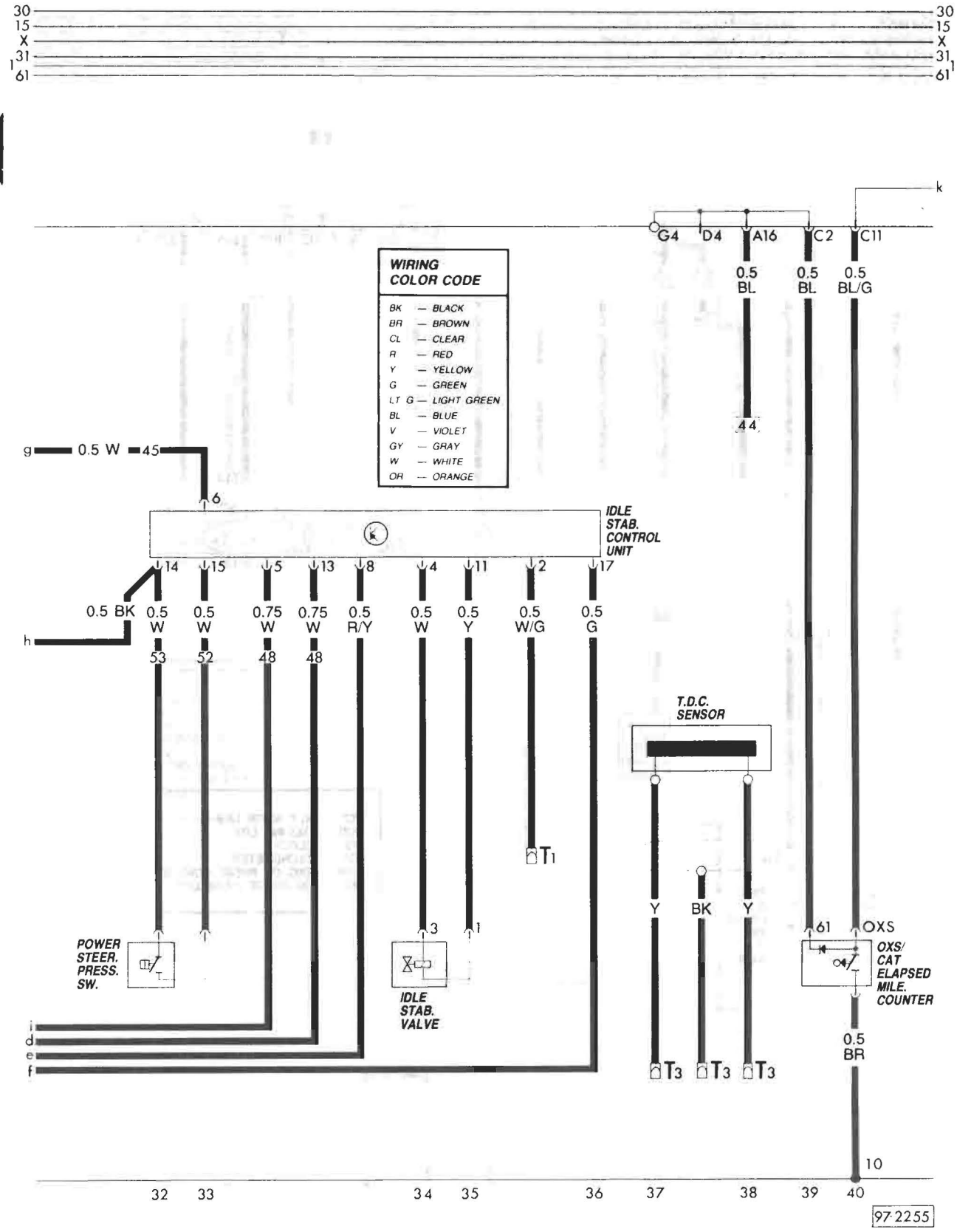

Water-cooled – Digifant 1986

Main wiring diagram
Idle stabilizer
up to VIN G 055 689

97.73

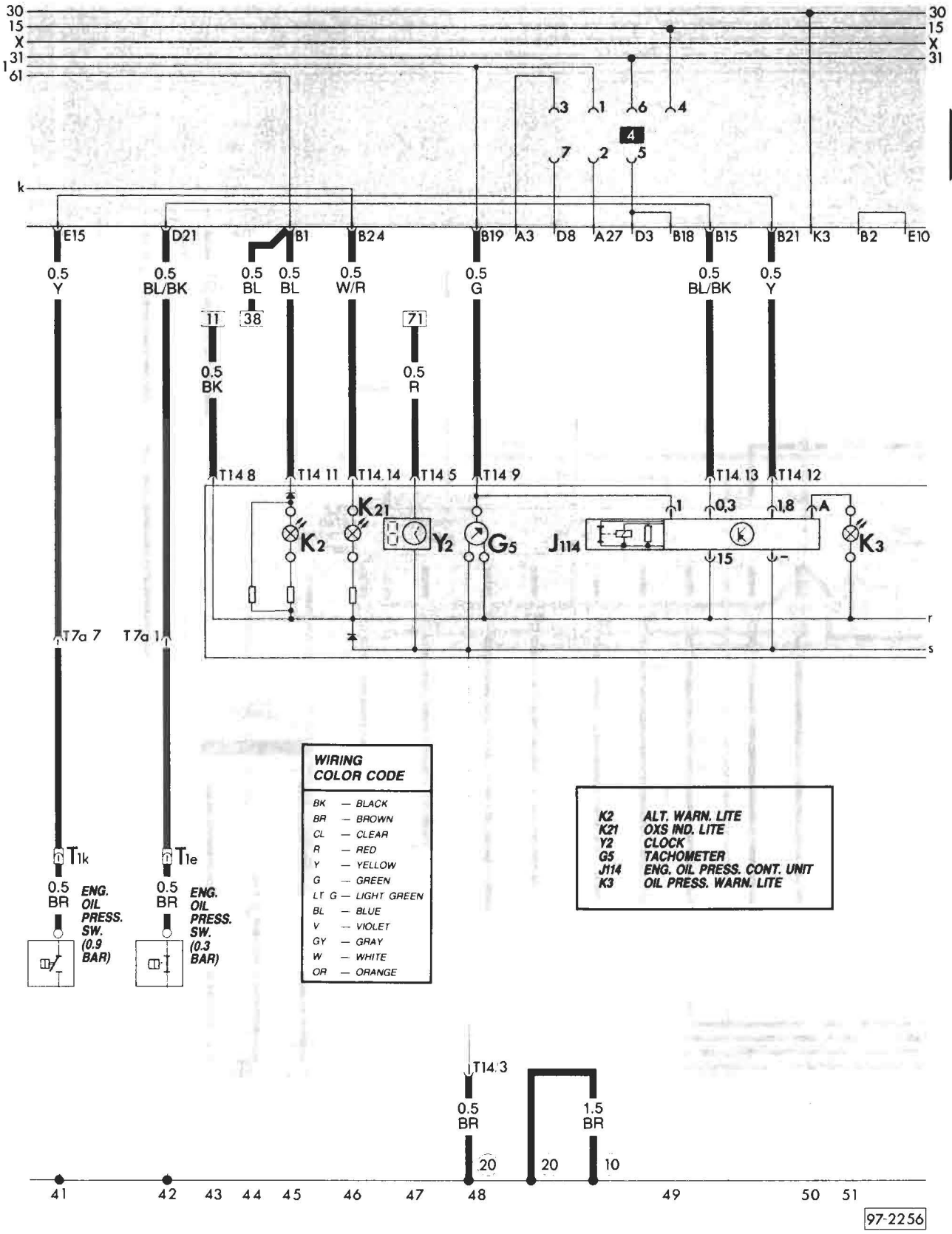

WIRING COLOR CODE

BK	— BLACK
BR	— BROWN
CL	— CLEAR
R	— RED
Y	— YELLOW
G	— GREEN
LT G	— LIGHT GREEN
BL	— BLUE
V	— VIOLET
GY	— GRAY
W	— WHITE
OR	— ORANGE

K2	ALT. WARN. LITE
K21	OXS IND. LITE
Y2	CLOCK
G5	TACHOMETER
J114	ENG. OIL PRESS. CONT. UNIT
K3	OIL PRESS. WARN. LITE

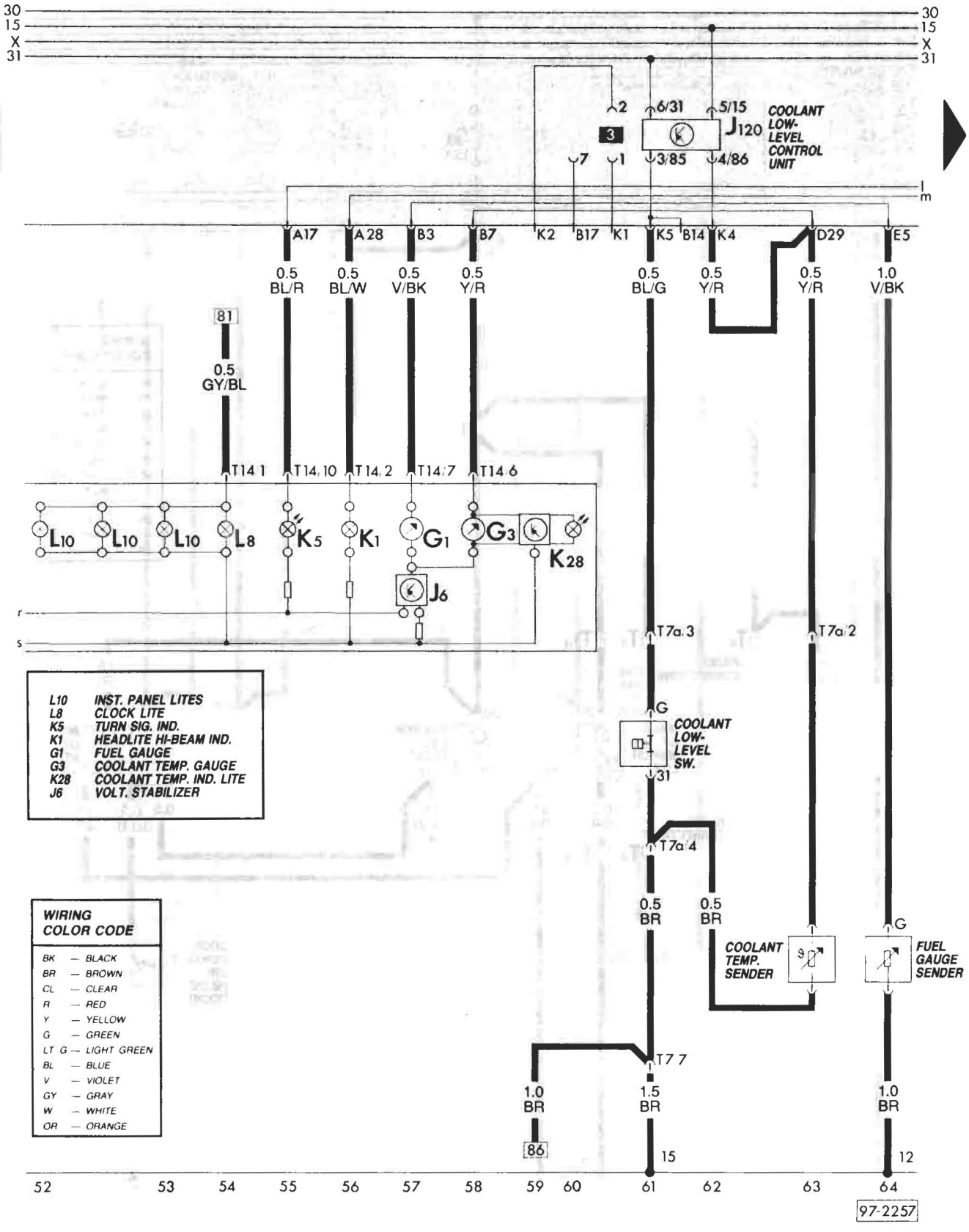

L10	INST. PANEL LITES
L8	CLOCK LITE
K5	TURN SIG. IND.
K1	HEADLITE HI-BEAM IND.
G1	FUEL GAUGE
G3	COOLANT TEMP. GAUGE
K28	COOLANT TEMP. IND. LITE
J6	VOLT. STABILIZER

WIRING COLOR CODE

BK	BLACK
BR	BROWN
CL	CLEAR
R	RED
Y	YELLOW
G	GREEN
LT G	LIGHT GREEN
BL	BLUE
V	VIOLET
GY	GRAY
W	WHITE
OR	ORANGE

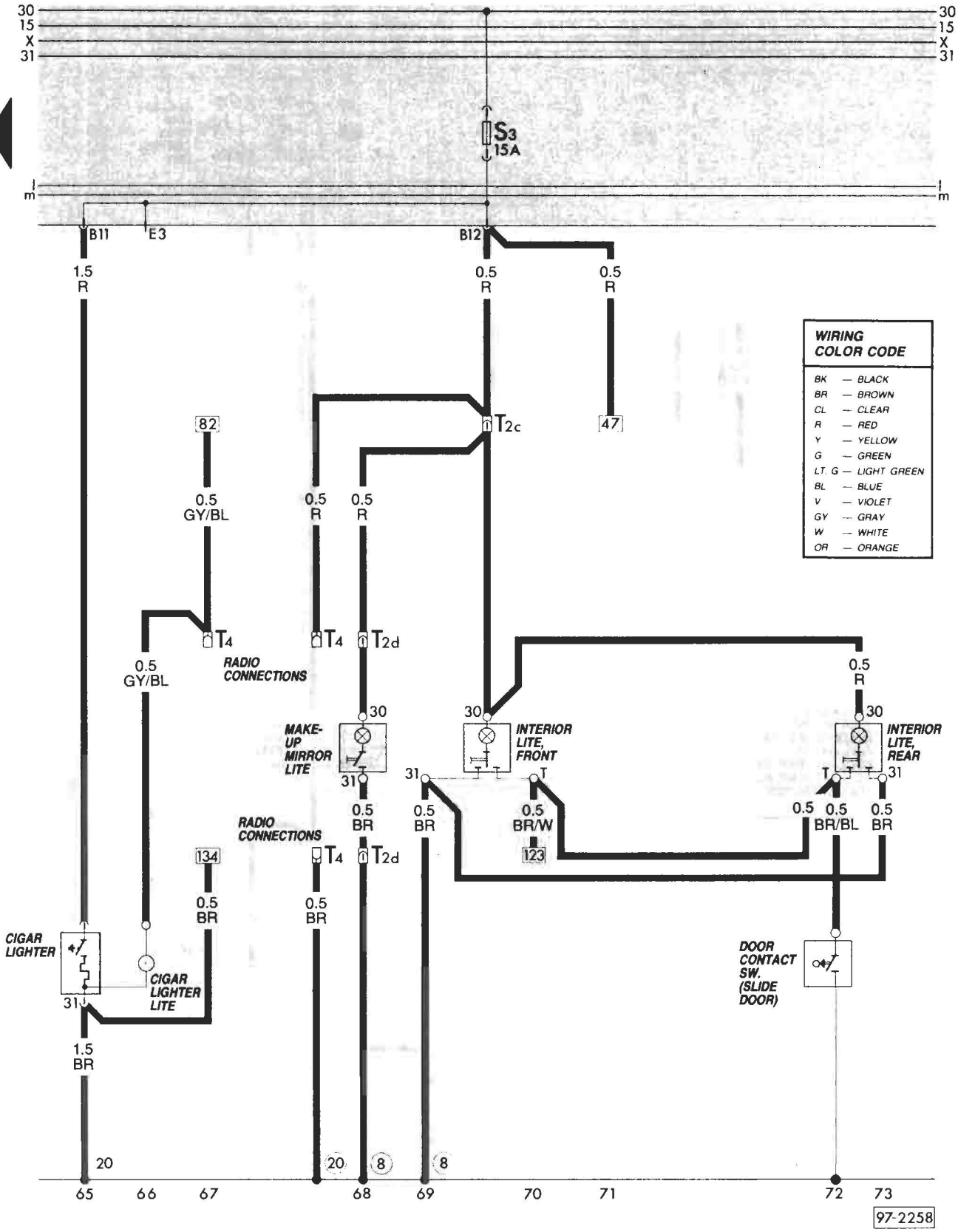
30
15
X
31
S3
15A
m
B11
E3
B12
1.5 R
0.5 R
0.5 R
WIRING COLOR CODE
BK — BLACK
BR — BROWN
CL — CLEAR
R — RED
Y — YELLOW
G — GREEN
LT. G — LIGHT GREEN
BL — BLUE
V — VIOLET
GY — GRAY
W — WHITE
OR — ORANGE
82
T2c
47
0.5 GY/BL
0.5 R
0.5 R
T4
T4
T2d
RADIO CONNECTIONS
0.5 GY/BL
MAKE-UP MIRROR LITE
INTERIOR LITE, FRONT
INTERIOR LITE, REAR
0.5 R
0.5 BR
0.5 BR
0.5 BR/W
0.5 BR/BL
0.5 BR
RADIO CONNECTIONS
T4
T2d
134
123
0.5 BR
0.5 BR
CIGAR LIGHTER
CIGAR LIGHTER LITE
DOOR CONTACT SW. (SLIDE DOOR)
1.5 BR
20
20
8
8
65
66
67
68
69
70
71
72
73
97-2258

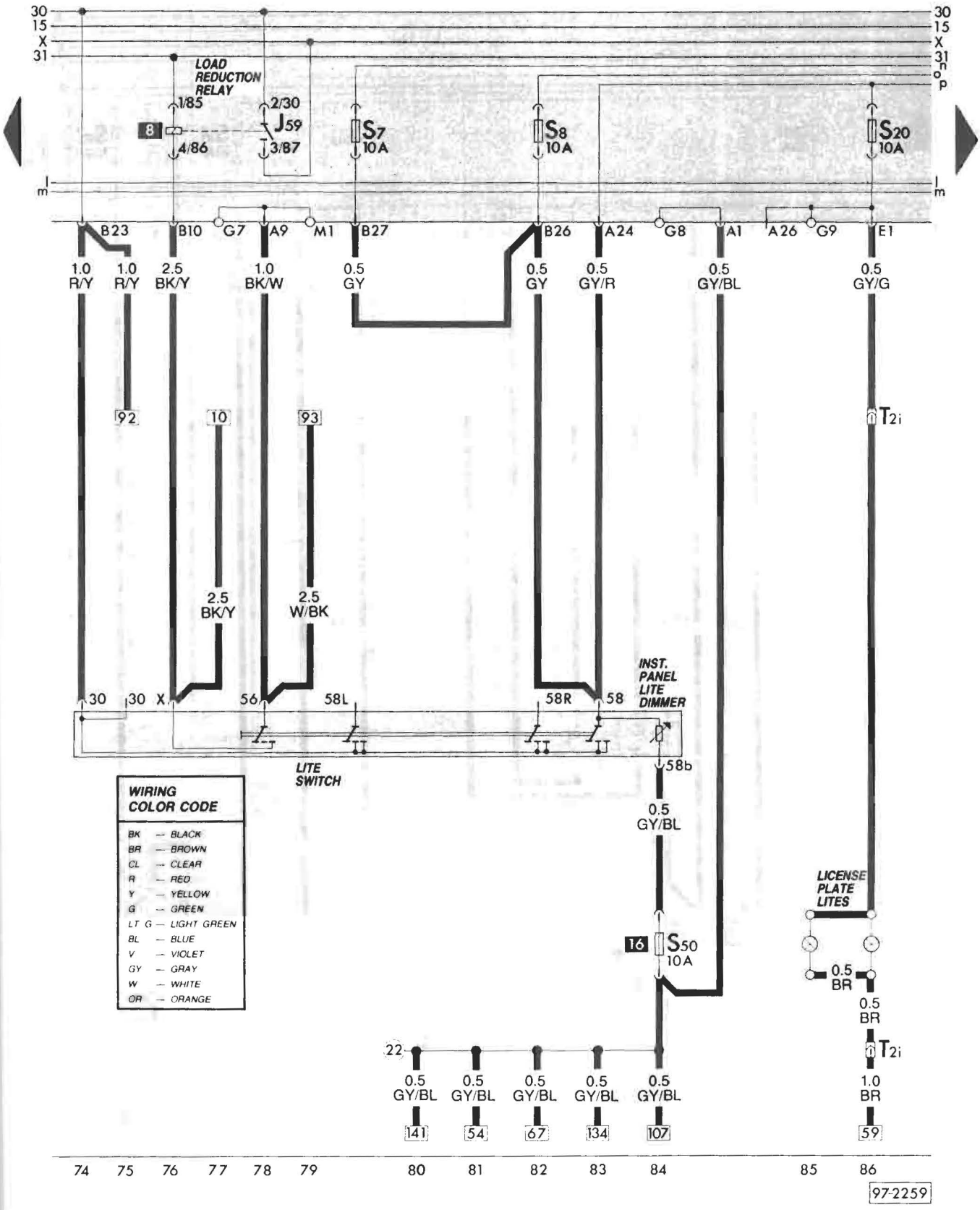
30
15
X
31
LOAD REDUCTION RELAY
1/85
2/30
J59
8
4/86
3/87
S7 10A
S8 10A
S20 10A
m
n
o
p
B23
B10
G7
A9
M1
B27
B26
A24
G8
A1
A26
G9
E1
1.0 R/Y
1.0 R/Y
2.5 BK/Y
1.0 BK/W
0.5 GY
0.5 GY
0.5 GY/R
0.5 GY/BL
0.5 GY/G
92
10
93
T2i
2.5 BK/Y
2.5 W/BK
INST. PANEL LITE DIMMER
30
30 X
56
58L
58R
58
LITE SWITCH
58b
0.5 GY/BL
WIRING COLOR CODE
BK — BLACK
BR — BROWN
CL — CLEAR
R — RED
Y — YELLOW
G — GREEN
LT G — LIGHT GREEN
BL — BLUE
V — VIOLET
GY — GRAY
W — WHITE
OR — ORANGE
LICENSE PLATE LITES
16
S50 10A
0.5 BR
0.5 BR
T2i
1.0 BR
22
0.5 GY/BL
0.5 GY/BL
0.5 GY/BL
0.5 GY/BL
0.5 GY/BL
141
54
67
134
107
59
74
75
76
77
78
79
80
81
82
83
84
85
86
97-2259

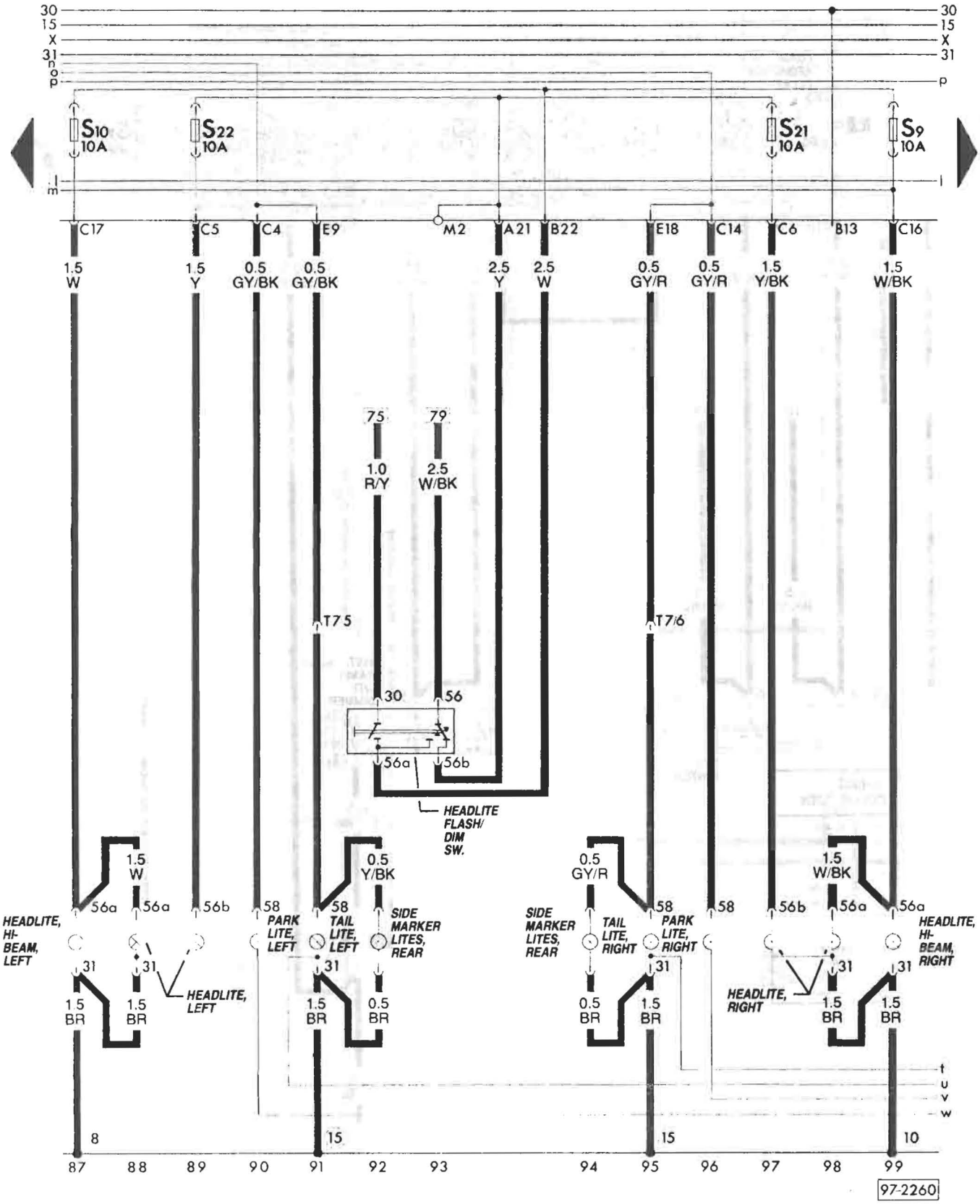

97.78 Main wiring diagram
Lights
up to VIN G 055 689

Water-cooled – Digifant 1986

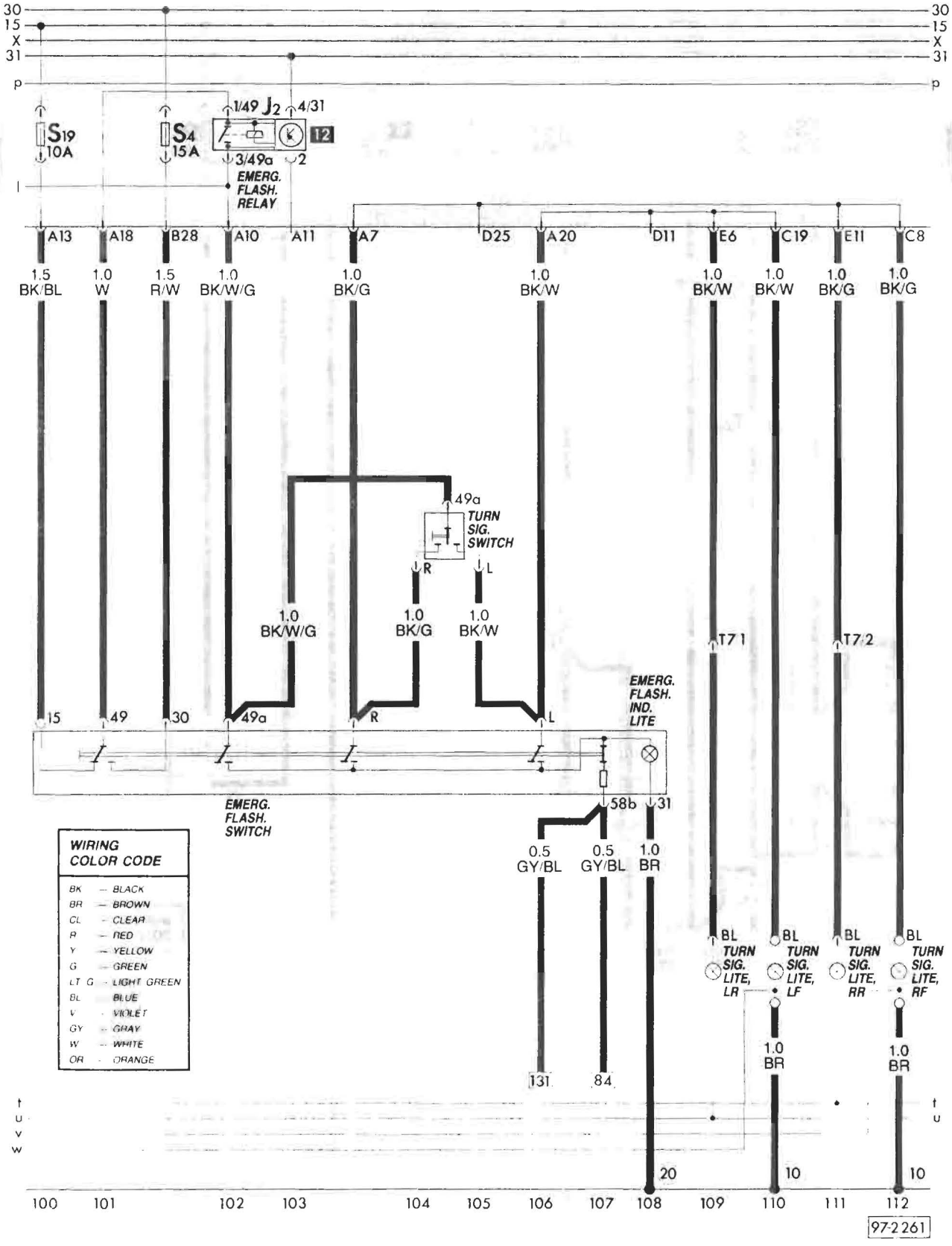

WIRING COLOR CODE

BK	BLACK
BR	BROWN
CL	CLEAR
R	RED
Y	YELLOW
G	GREEN
LT G	LIGHT GREEN
BL	BLUE
V	VIOLET
GY	GRAY
W	WHITE
OR	ORANGE

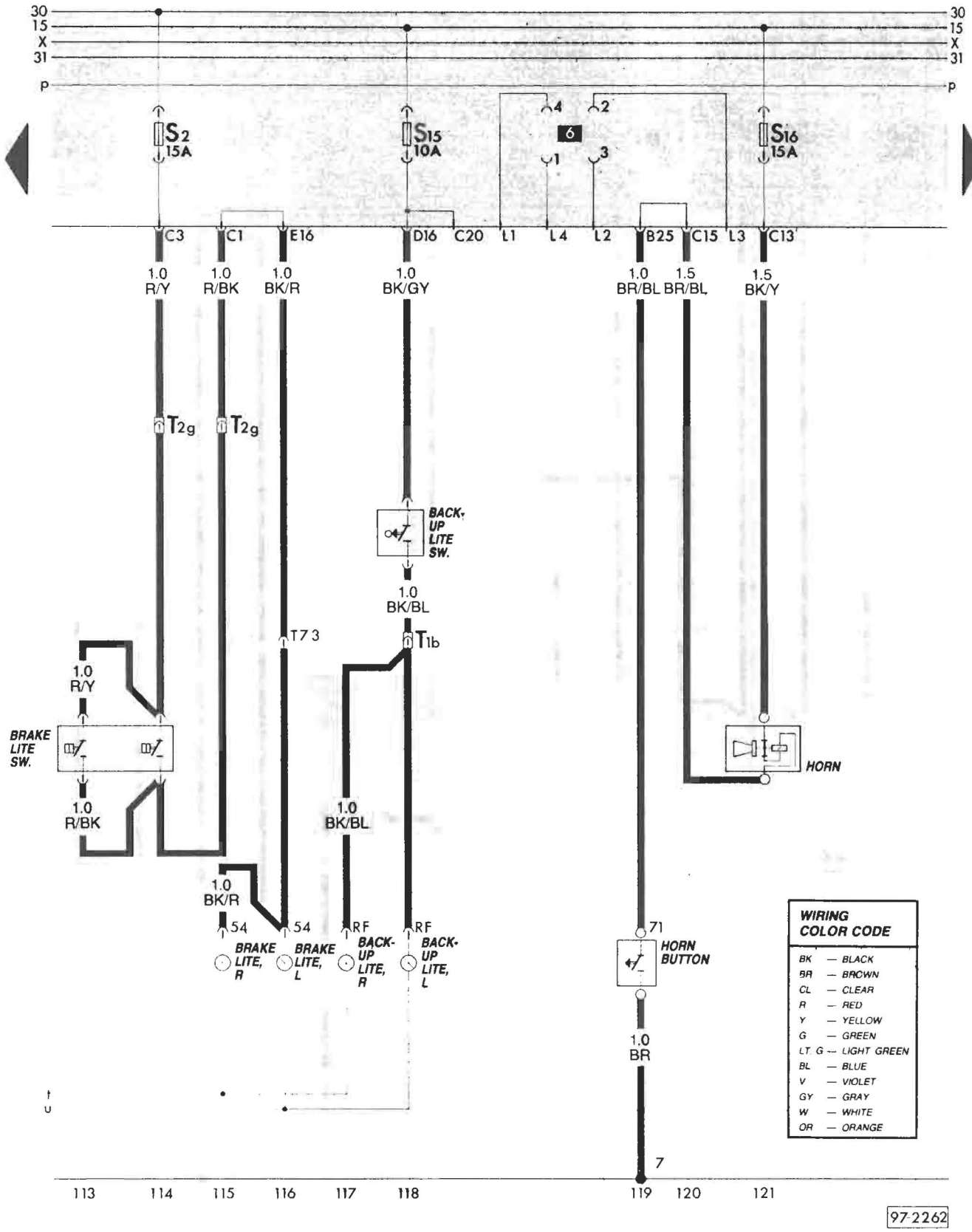
30
15
X
31
P
S2 15A
S15 10A
S16 15A
6
C3
C1
E16
D16
C20
L1
L4
L2
B25
C15
L3
C13
1.0 R/Y
1.0 R/BK
1.0 BK/R
1.0 BK/GY
1.0 BR/BL
1.5 BR/BL
1.5 BK/Y
T2g
T2g
BACK-UP LITE SW.
1.0 BK/BL
T7 3
T1b
BRAKE LITE SW.
HORN
1.0 BK/R
54
BRAKE LITE, R
BRAKE LITE, L
RF
BACK-UP LITE, R
BACK-UP LITE, L
71
HORN BUTTON
1.0 BR
7
113
114
115
116
117
118
119
120
121
WIRING COLOR CODE
BK — BLACK
BR — BROWN
CL — CLEAR
R — RED
Y — YELLOW
G — GREEN
LT. G — LIGHT GREEN
BL — BLUE
V — VIOLET
GY — GRAY
W — WHITE
OR — ORANGE
97-2262

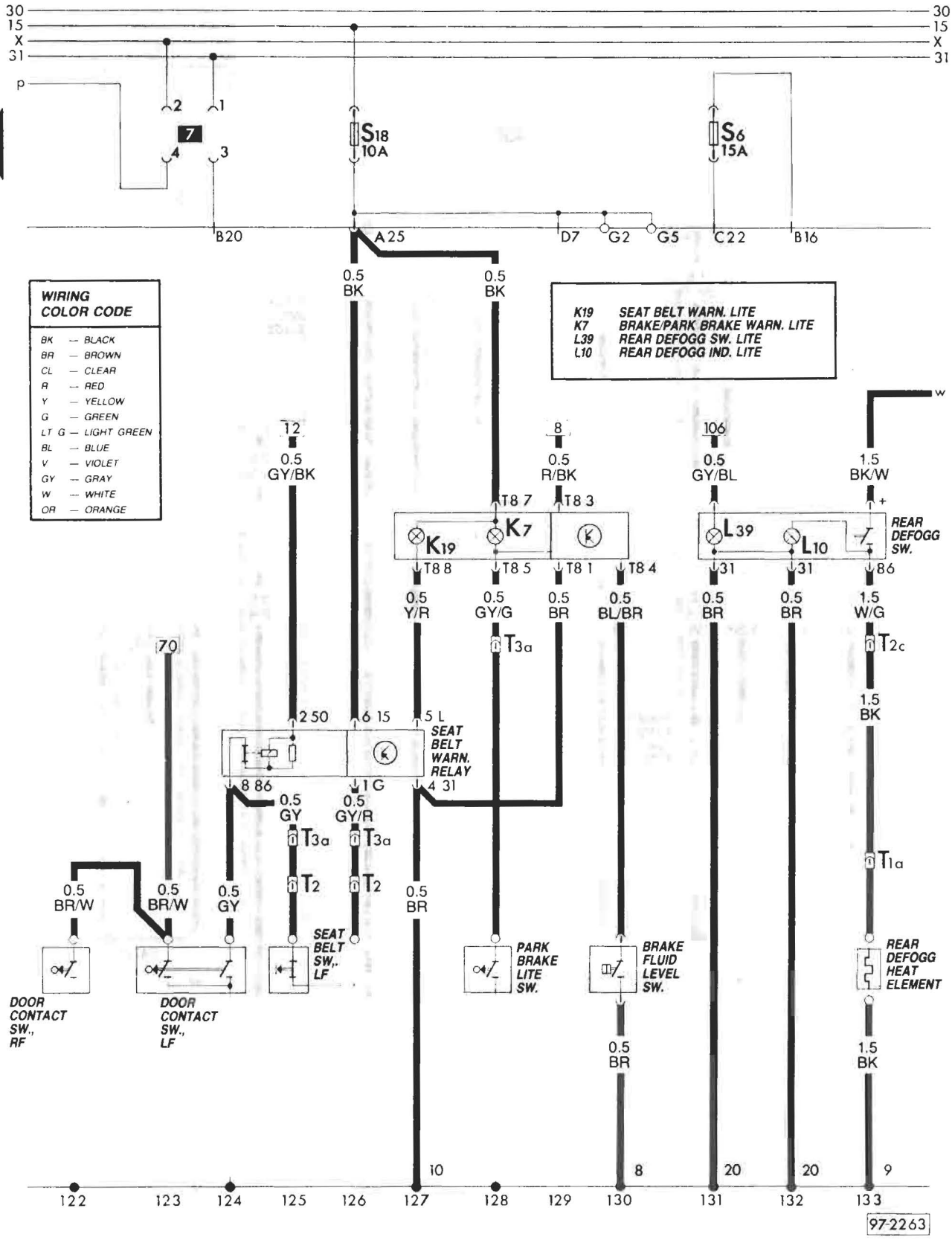
30
15
X
31
P
2
1
7
4
3
S18
10A
S6
15A
B20
A25
D7
G2
G5
C22
B16
0.5
BK
0.5
BK
WIRING
COLOR CODE
BK — BLACK
BR — BROWN
CL — CLEAR
R — RED
Y — YELLOW
G — GREEN
LT G — LIGHT GREEN
BL — BLUE
V — VIOLET
GY — GRAY
W — WHITE
OR — ORANGE
K19 SEAT BELT WARN. LITE
K7 BRAKE/PARK BRAKE WARN. LITE
L39 REAR DEFOGG SW. LITE
L10 REAR DEFOGG IND. LITE
12
0.5
GY/BK
8
0.5
R/BK
106
0.5
GY/BL
1.5
BK/W
W
T8 7
T8 3
K19
K7
L39
L10
REAR
DEFOGG
SW.
T8 8
T8 5
T8 1
T8 4
31
31
86
0.5
Y/R
0.5
GY/G
0.5
BR
0.5
BL/BR
0.5
BR
0.5
BR
1.5
W/G
70
T3a
T2c
2 50
6 15
5 L
SEAT
BELT
WARN.
RELAY
8 86
1 G
4 31
1.5
BK
0.5
GY
0.5
GY/R
T3a
T3a
T1a
T2
T2
0.5
BR/W
0.5
BR/W
0.5
GY
0.5
BR
SEAT
BELT
SW.,
LF
PARK
BRAKE
LITE
SW.
BRAKE
FLUID
LEVEL
SW.
REAR
DEFOGG
HEAT
ELEMENT
DOOR
CONTACT
SW.,
RF
DOOR
CONTACT
SW.,
LF
0.5
BR
1.5
BK
10
8
20
20
9
122
123
124
125
126
127
128
129
130
131
132
133
97-2263

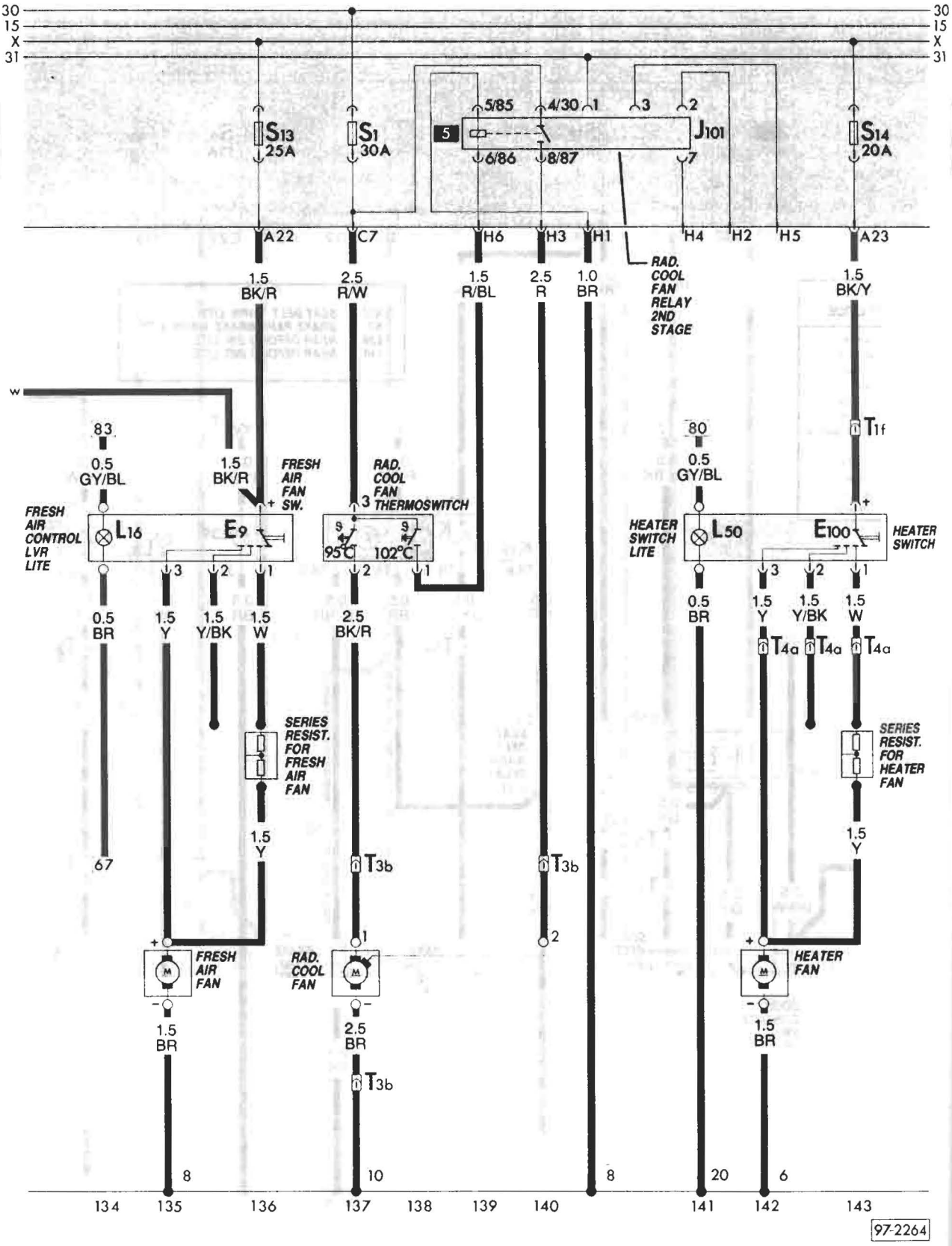
30
15
X
31
S13 25A
S1 30A
5
5/85
4/30
1
3
2
J101
6/86
8/87
7
S14 20A
A22
C7
H6
H3
H1
H4
H2
H5
A23
1.5 BK/R
2.5 R/W
1.5 R/BL
2.5 R
1.0 BR
RAD. COOL FAN RELAY 2ND STAGE
1.5 BK/Y
w
83
0.5 GY/BL
1.5 BK/R
FRESH AIR FAN SW.
FRESH AIR CONTROL LVR LITE
L16
E9
RAD. COOL FAN THERMOSWITCH
95°C
102°C
80
0.5 GY/BL
T1f
HEATER SWITCH LITE
L50
E100
HEATER SWITCH
0.5 BR
1.5 Y
1.5 Y/BK
1.5 W
2.5 BK/R
0.5 BR
1.5 Y
1.5 Y/BK
1.5 W
T4a
T4a
T4a
SERIES RESIST. FOR FRESH AIR FAN
SERIES RESIST. FOR HEATER FAN
67
1.5 Y
T3b
T3b
1.5 Y
FRESH AIR FAN
RAD. COOL FAN
HEATER FAN
1.5 BR
2.5 BR
1.5 BR
T3b
8
10
8
20
6
134
135
136
137
138
139
140
141
142
143
97-2264

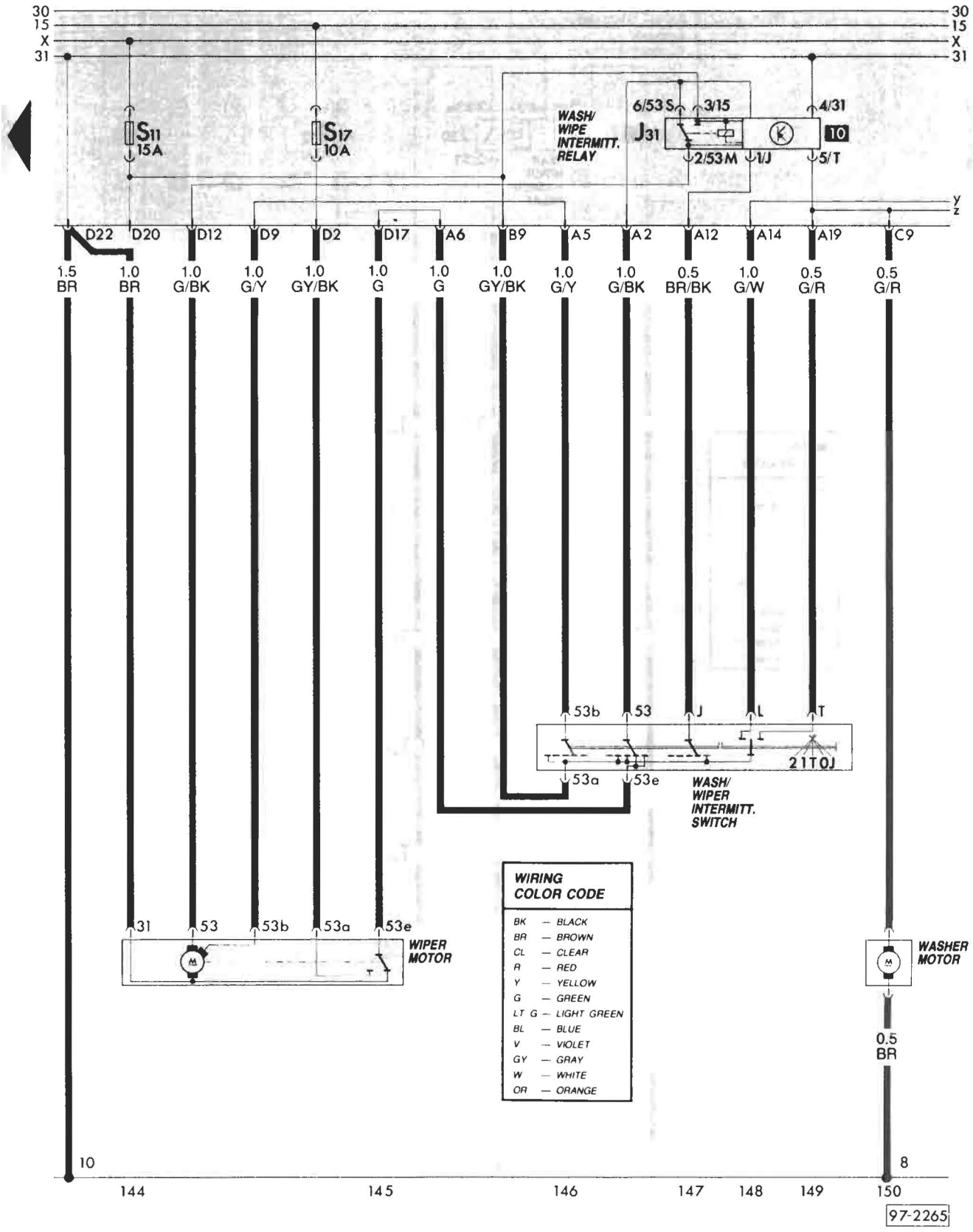

Water-cooled – Digifant 1986

Main wiring diagram
Wiper/Washer
up to VIN G 055 689

97.83

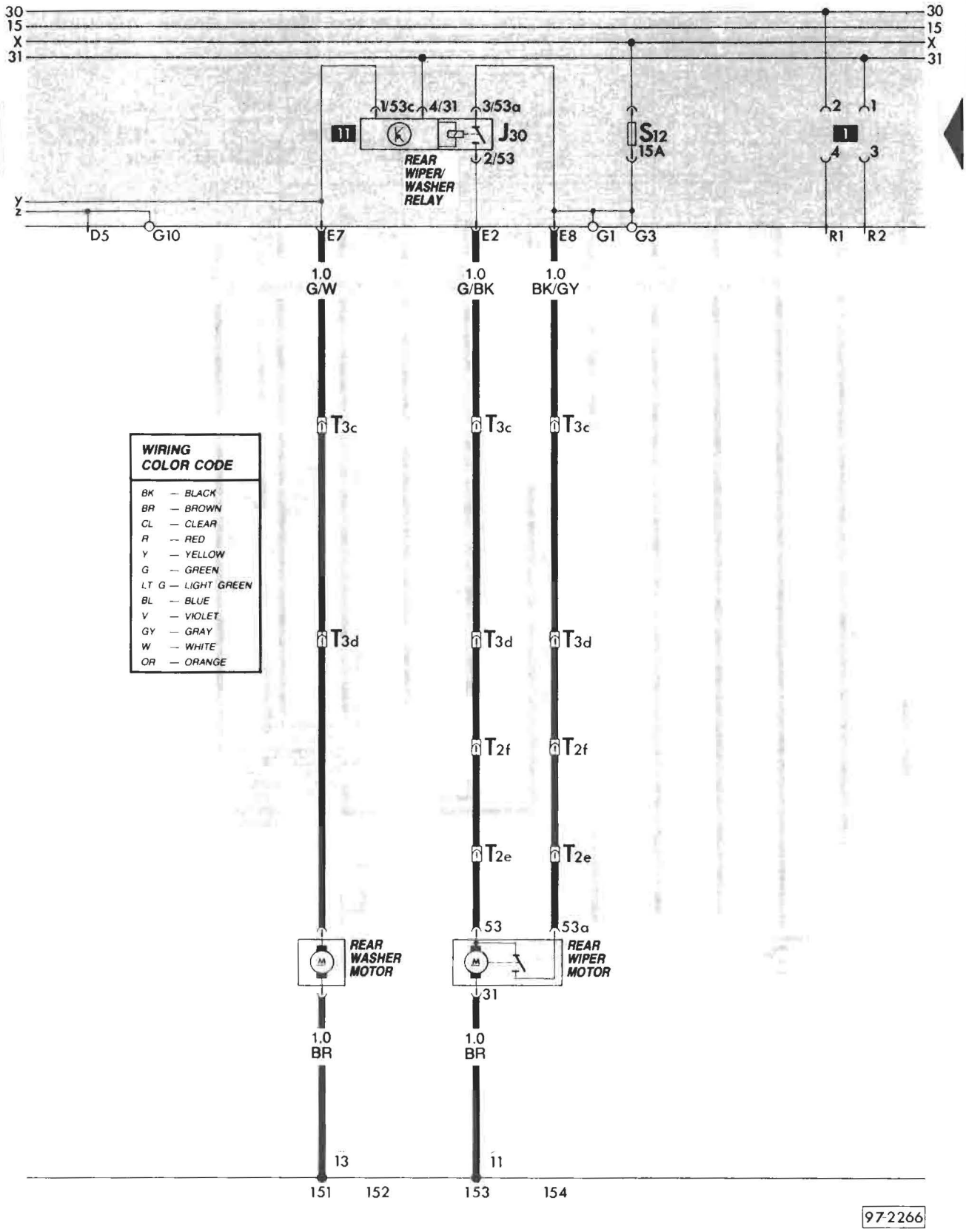
30
15
X
31
y
z
1/53c
4/31
3/53a
J30
REAR WIPER/ WASHER RELAY
2/53
S12
15A
2
1
4
3
D5
G10
E7
E2
E8
G1
G3
R1
R2
1.0 G/W
1.0 G/BK
1.0 BK/GY
T3c
T3d
T2f
T2e
WIRING COLOR CODE
BK — BLACK
BR — BROWN
CL — CLEAR
R — RED
Y — YELLOW
G — GREEN
LT G — LIGHT GREEN
BL — BLUE
V — VIOLET
GY — GRAY
W — WHITE
OR — ORANGE
53
53a
REAR WASHER MOTOR
REAR WIPER MOTOR
31
1.0 BR
1.0 BR
13
11
151
152
153
154
97-2266

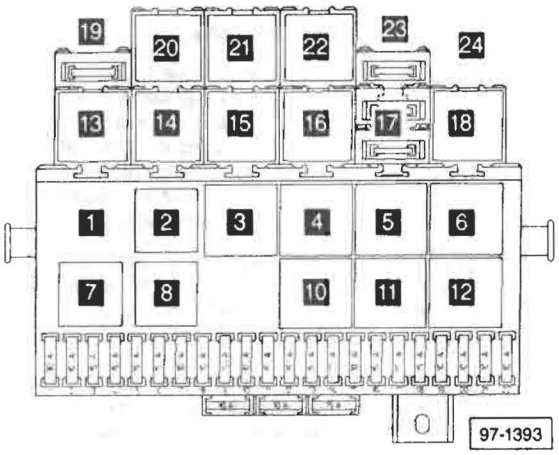

Fuse arrangement

according to numbers on fuse panel as seen from left to right:

		Amp.
1	Radiator fan	30
2	Stop lights	10
3	Cigarette lighter, radio, clock, interior lights, central locking system	10
4	Emergency flasher system	15
5	Electric fuel pump	15
6	Vacant	
7	Tail, parking and side marker lights, left	10
8	Tail, parking and side marker lights, right	10
9	High beam right, high beam indicator light	10
10	High beam left	10
11	Wind. wipers and washer	15
12	Heated seats, outside rear view mirror adjustment	15
13	Rear window defogger, heated rear view mirror	15
14	Fresh air fan, glove compartment light	20
15	Back-up lights, shift console light (Auto. Transmission)	10
16	Horn (single tone)	15
17	Vacant	
18	Dual horn, coolant level and temp. warning light	10
19	Turn signals, brake warning light	10
20	License plate lights	10
21	Low beam left	10
22	Low beam right	10

CAUTION

Relay locations are subject to change and may vary from vehicle to vehicle depending on options.

Use extreme care when troubleshooting the electrical system.

If you encounter problems identifying a particular relay, consult your Parts Department.

Separate fuses above fuse panel

Power windows	30
A/C	30

Fuse/Relay Panel

3 — coolant level control unit

5 — rad. cool. fan relay, 2nd stage

8 — load reduction relay

10 — intermitt. wash/wiper relay

11 — rear window wash/wiper relay

12 — emerg. flash/turn sig. relay

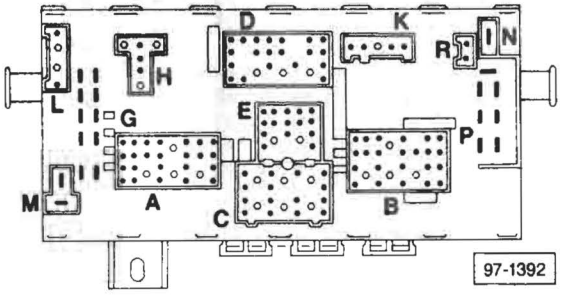

Connections and plugs on fuse/relay panel

A — multi-point connector (blue) for instrument panel wiring harness

B — multi-point connector (red) for instrument panel wiring harness

C — multi-point connector (yellow) for front wiring harness

D — multi-point connector (white) for windshield wiper and main wiring harness

E — multi-point connector (black) for main wiring harness

G — single connector

H — multi-point connector (brown) to connector for rad. cool fan relay, 2nd stage

K — multi-point connector (colorless) to radiator coolant low-level control unit

L — multi-point connector (gray) for horns

M — open position

N — single connector

P — single connector (terminal 30)

R — open position

Description	Current track
Air flow sensor potentiometer	22-24
Alternator	5,6
Alternator warning lite	51
Back-up lite switch	127
Back-up lite, left	127
Back-up lite, right	126
Battery	1
Brake and parking brake indicator lite	134
Brake fluid level warning contact	136
Brake lite switch	122,123
Brake lite, left	125
Brake lite, right	124
CAT elapsed mileage counter	45,46
Cigarette lighter	72
Cigarette lighter lite	73
Clock lite	61
Coolant low level control unit	68,69
Coolant low level warning switch	68
Coolant overheat warning lite	67
Coolant temperature gauge	65
Coolant temperature sending unit	70
Digifant control unit	16-27
Digijet control unit relay	32,34
Digital clock	53
Door contact switch, left front	77,78
Door contact switch, right front	81
Emergency flasher relay	111
Emergency flasher switch	110,117
Emergency flasher warning lite	117
Engine oil pressure control unit	55,56
Engine oil pressure switch (0.3 bar)	48
Engine oil pressure switch (1.8 bar)	47
Engine oil pressure warning lite	57
Fresh air blower series resistance	142
Fresh air control lever lite	140
Fresh air fan	141
Fresh air fan switch	141,142
Fuel gauge	64
Fuel gauge sending unit	71
Fuel pump	31
Fuel pump relay	30,31
Hall generator	17-19
Headlite dimmer/flasher switch	102,103
Headlite high beam warning lite	63
Headlite, left	97,99
Headlite, right	107,108
Heater blower series resistance	149
Heater fan switch illumination lite	147
Heating element (crankcase ventilation)	12
High-beam headlite, left	98
High-beam headlite, right	109
Horn button	128
Horns	129
Idle speed stabilizer valve	40,41
Idle stabilizer control unit	36,42
Ignition coil	14
Ignition distributor	13-15
Ignition/starter switch	8-11
Injector, cyl. 1	27
Injector, cyl 2	28
Injector, cyl. 3	29
Injector, cyl. 4	30
Instrument panel lite	58-60
Instrument panel lite dimmer switch	94
Interior lite, front	77,78
Interior lite, rear	82,83
Interior lite, right	80,81
License plate lite	95,96
Lite switch	85,94
Load reduction relay	86-88
Make-up mirror lite	76
Map/reading lite, right front	75
OXS elapsed mileage indicator	52
Oxygen sensor	25,26
Parking brake warning lite switch	134
Parking lite, left	100
Parking lite, right	106
Power steering pressure switch	36,37
Radiator cooling fan	143
Radiator cooling fan relay (2nd stage)	147
Radiator cooling fan thermoswitch	143,144
Rear window defogger indicator lite	38
Rear window defogger switch	139
Rear window defogger switch lite	137
Rear window washer pump	157
Rear window wiper motor	159,160
Rear window wiper/washer relay	158,159
Safety belt switch, right	131,132
Seat belt warning lite	133
Seat belt warning relay	130-133
Side marker lites, rear	102,104
Spark plug connectors	13-15
Spark plugs	13-15
Starter	3,4
T.D.C. sensor	43,44
Tachometer	54
Tail lite, left	101
Tail lite, right	105
Temperature sensor II	21
Throttle valve switch (enrichment)	20
Turn signal indicator lite	62
Turn signal lite, left front	119
Turn signal lite, left rear	118
Turn signal lite, right front	121
Turn signal lite, right rear	120
Turn signal switch	113,114
Voltage regulator	5,6
Voltage stabilizer	64
Warm air blower	148
Warm air blower switch	148,149
Washer/wiper intermittent relay	153-155
Windshield washer pump	156
Windshield wiper motor	150,151
Windshield-wiper intermittent switch	152-155

Wire Connectors

T1a — single, under instrument panel
T1c — single, eng. compart., left
T1d — single, in wire distributor box
T1e — single, eng. compart., left
T1f — single, under instrument panel
T1g — single, under instrument panel
T1h — single, eng. compart., left

T2a — double, eng. compart., left
T2b — double, eng. compart., left
T2c — double, under inst. panel, left
T2d — double, behind sunvisor attaching screws, right
T2e — double, in rear decklid
T2f — double, behind right 'c' pillar cover
T2g — double, under instrument panel
T2m — double, near fuse/relay panel
T2x — double, eng. compart., middle

T3 — three-point, on alternator
T3a — three-point, under instrument panel
T3b — three-point, behind front air duct
T3c — three-point, under instrument panel
T3d — three-point, under right 'c' pillar cover

T4 — four-point, under instrument panel
T4a — four point, under rear seat bench

T7/ — seven-point, in wire distributor box
T7a/ — seven-point, in wire distributor box
T14/ — fourteen-point, on instrument cluster

Ground Connections

(1) — battery to body
(2) — from body to transmission
(7) — on steering rack
(10) — near fuse/relay panel
(11) — in rear decklid
(12) — on left front crossmember
(13) — near rear washer fluid bottle
(14) — under rear seat bench
(15) — under ignition coil
(17) — under rear seat bench
(18) — near fuel pump
(19) — on cylinder head
(20) — in instrument panel wiring harness
(24) — near digifant wiring harness

Plus Connections

(21) — terminal 30, in wire distributor box
(22) — terminal 58b, in instrument panel wiring harness
(26) — in digifant wiring harness

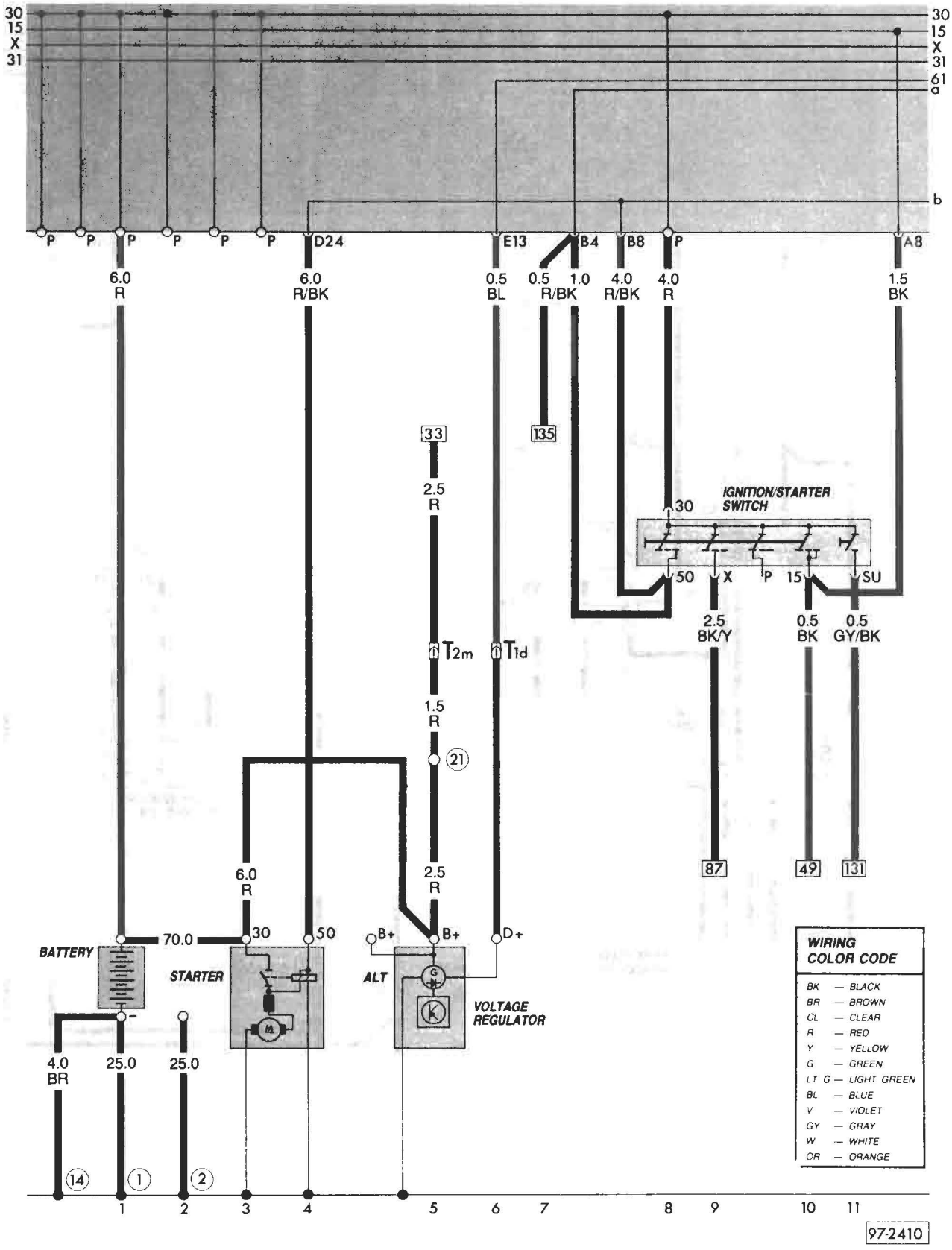

Water-cooled – Digifant 1986

Main wiring diagram
Alternator/Starter
from VIN G 055 690

97.87

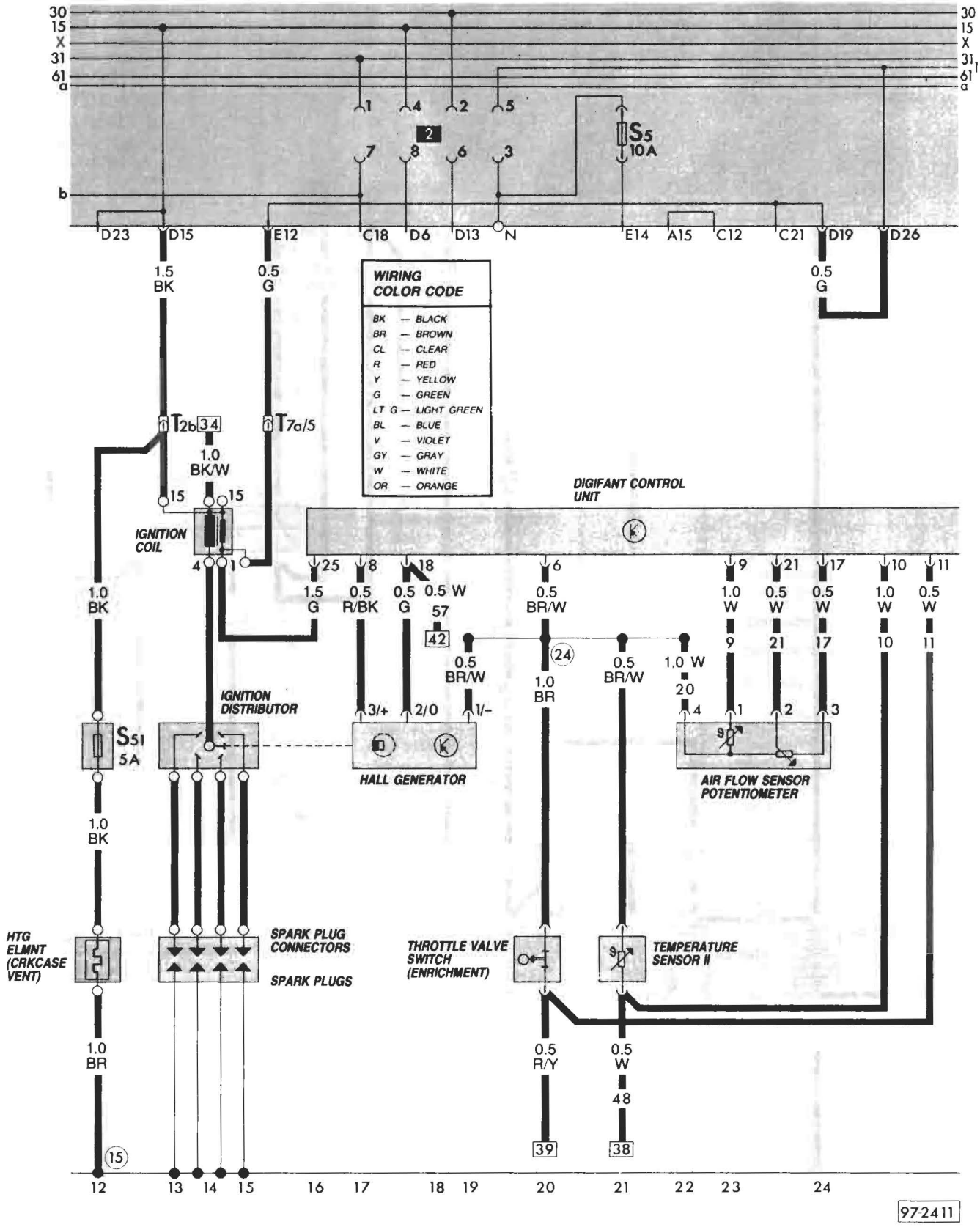

97.88 Main wiring diagram Digifant system from VIN G 055 690

Water-cooled – Digifant 1986

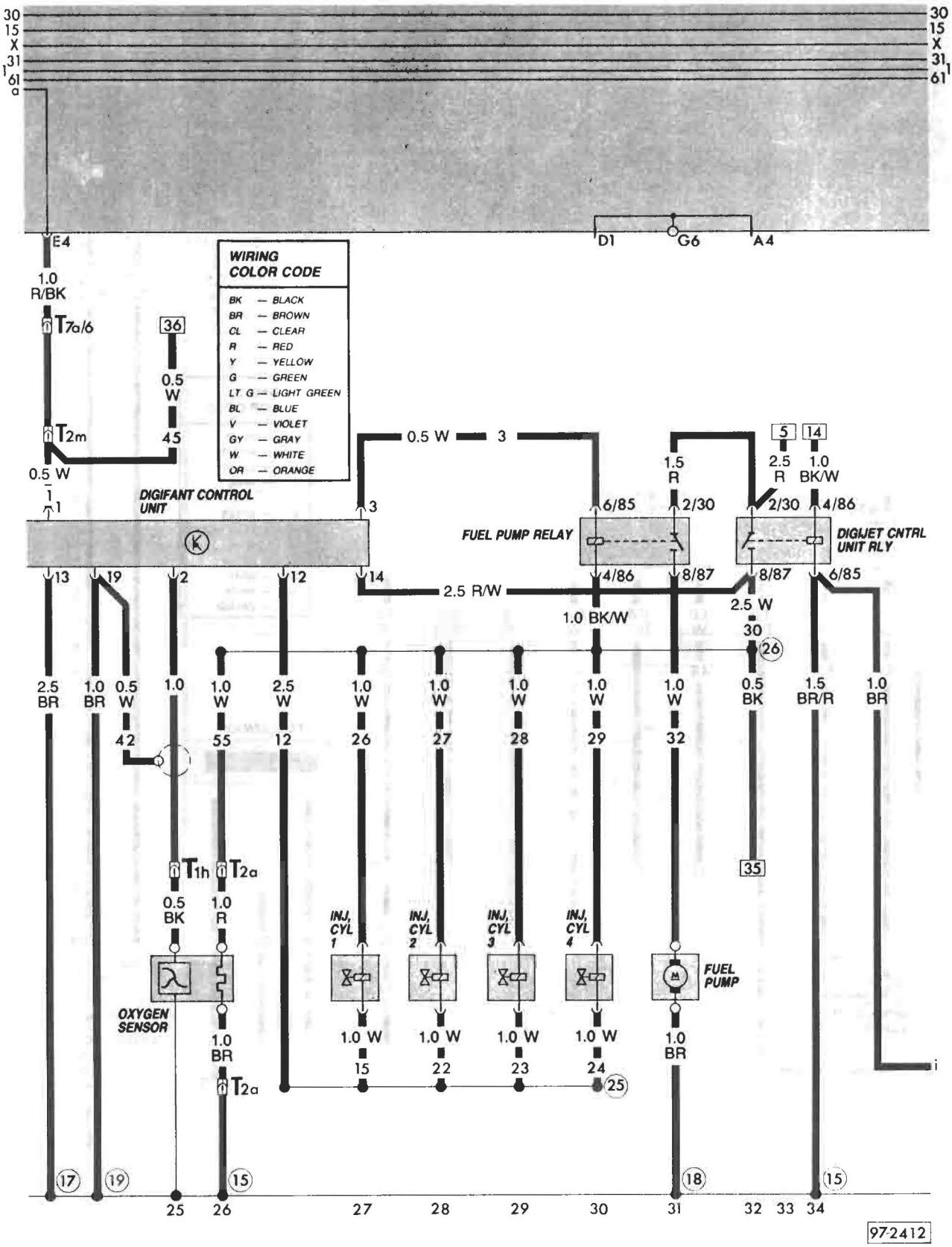

Water-cooled – Digifant 1986

Main wiring diagram
Digifant system
from VIN G 055 690

97.89

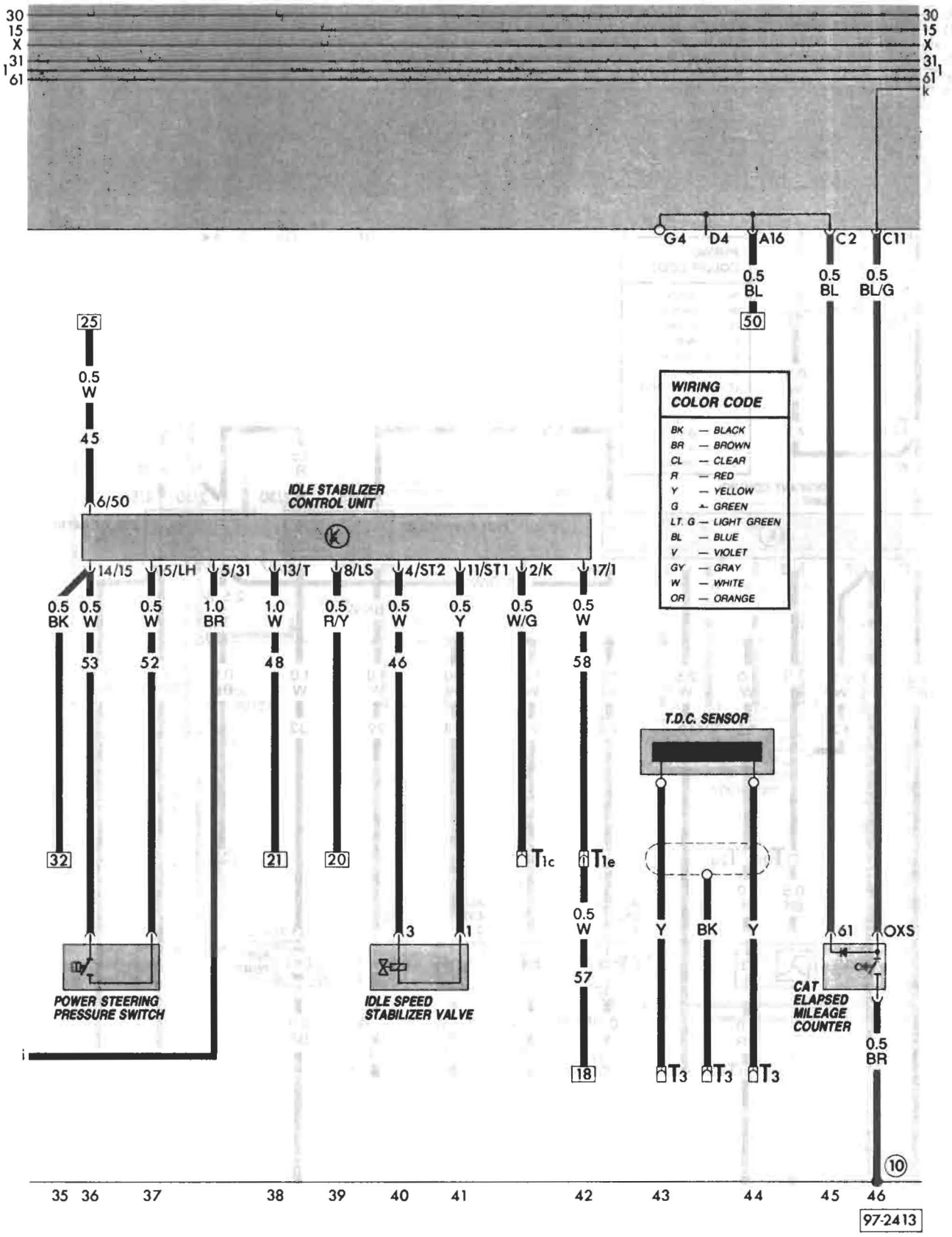

97.90 Main wiring diagram Idle stabilizer control from VIN G 055 690

Water-cooled—Digifant 1986

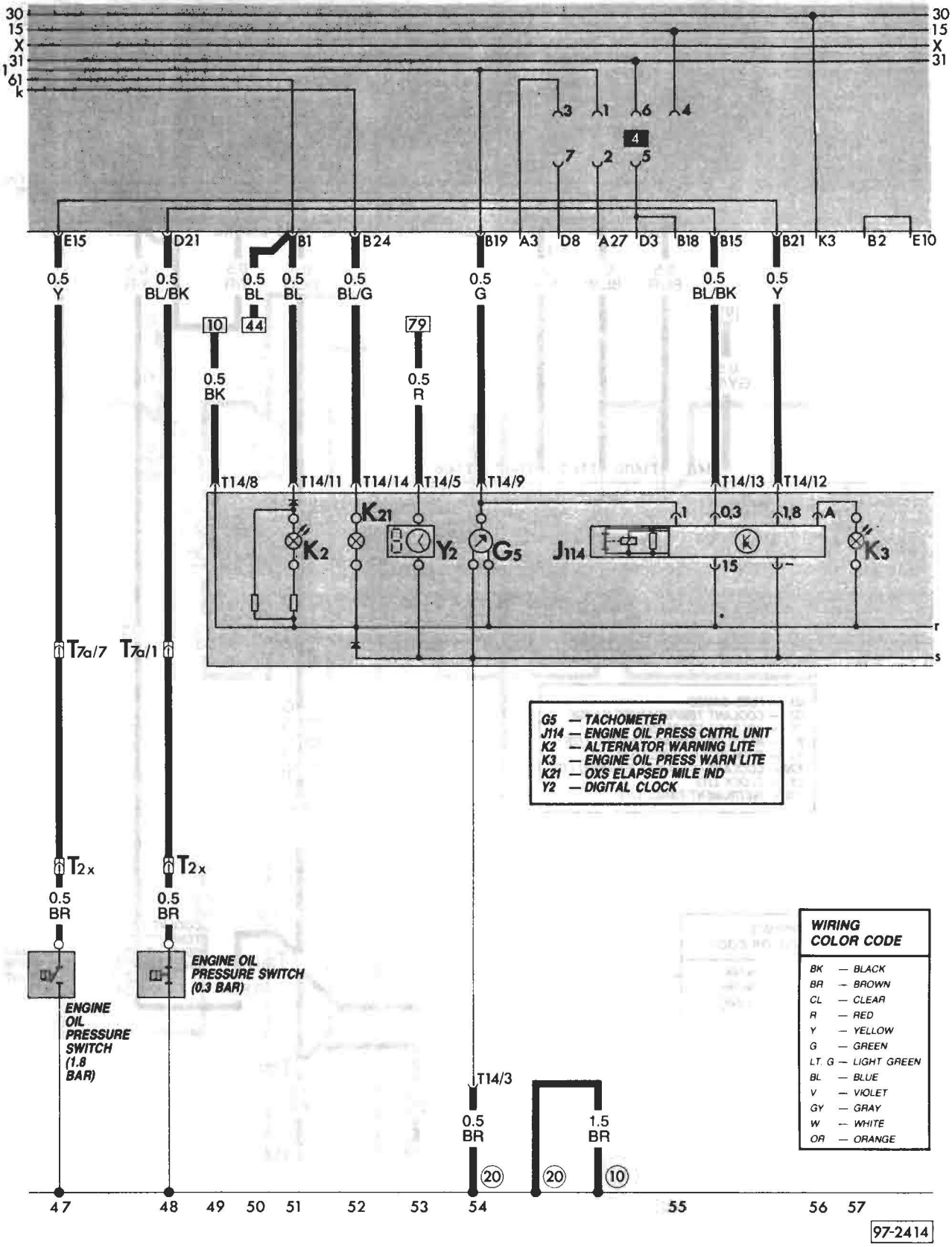

Water-cooled – Digifant 1986

Main wiring diagram
Instrument cluster
from VIN G 055 690

97.91

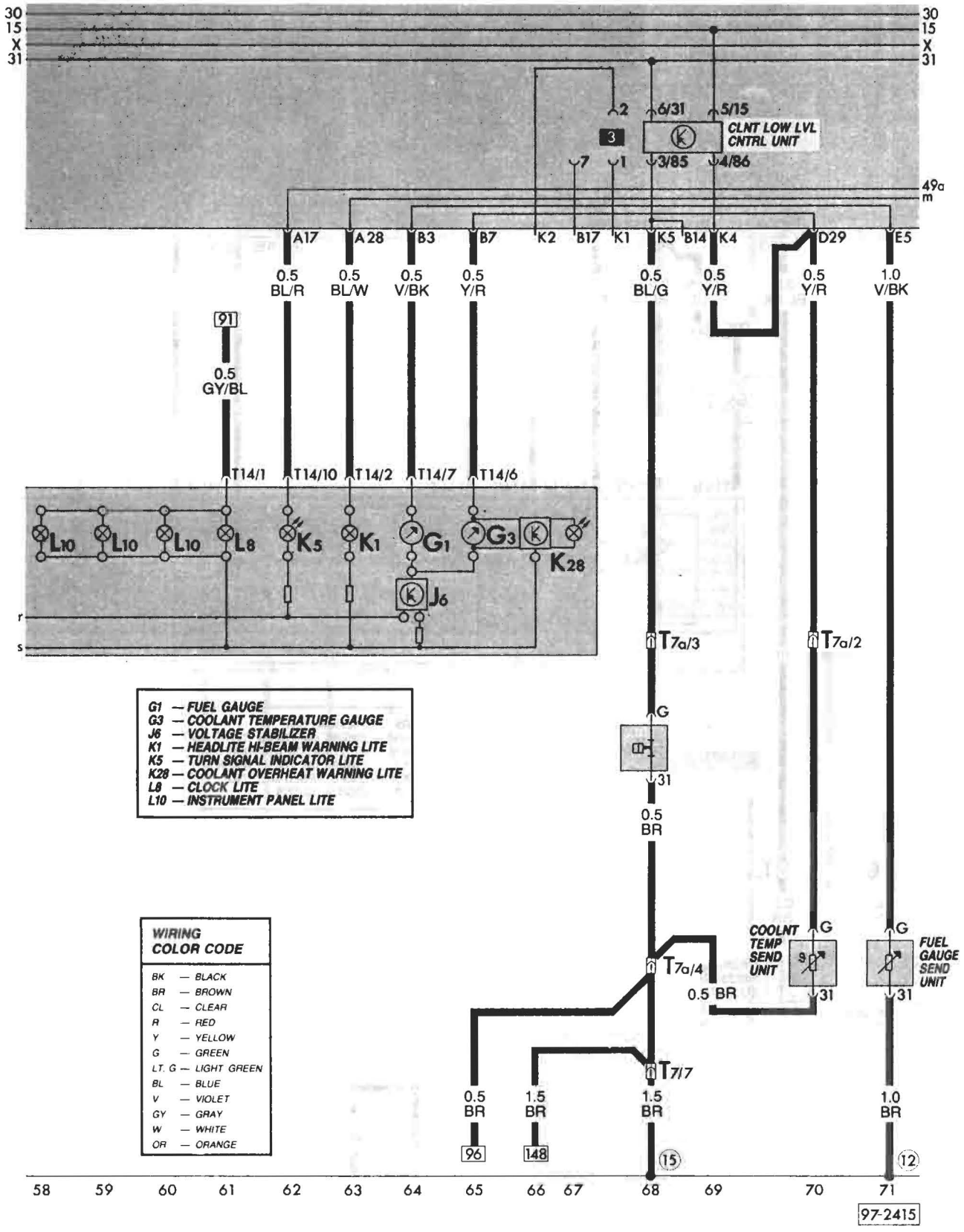

G1 — FUEL GAUGE
G3 — COOLANT TEMPERATURE GAUGE
J6 — VOLTAGE STABILIZER
K1 — HEADLITE HI-BEAM WARNING LITE
K5 — TURN SIGNAL INDICATOR LITE
K28 — COOLANT OVERHEAT WARNING LITE
L8 — CLOCK LITE
L10 — INSTRUMENT PANEL LITE

WIRING COLOR CODE

BK	BLACK
BR	BROWN
CL	CLEAR
R	RED
Y	YELLOW
G	GREEN
LT. G	LIGHT GREEN
BL	BLUE
V	VIOLET
GY	GRAY
W	WHITE
OR	ORANGE

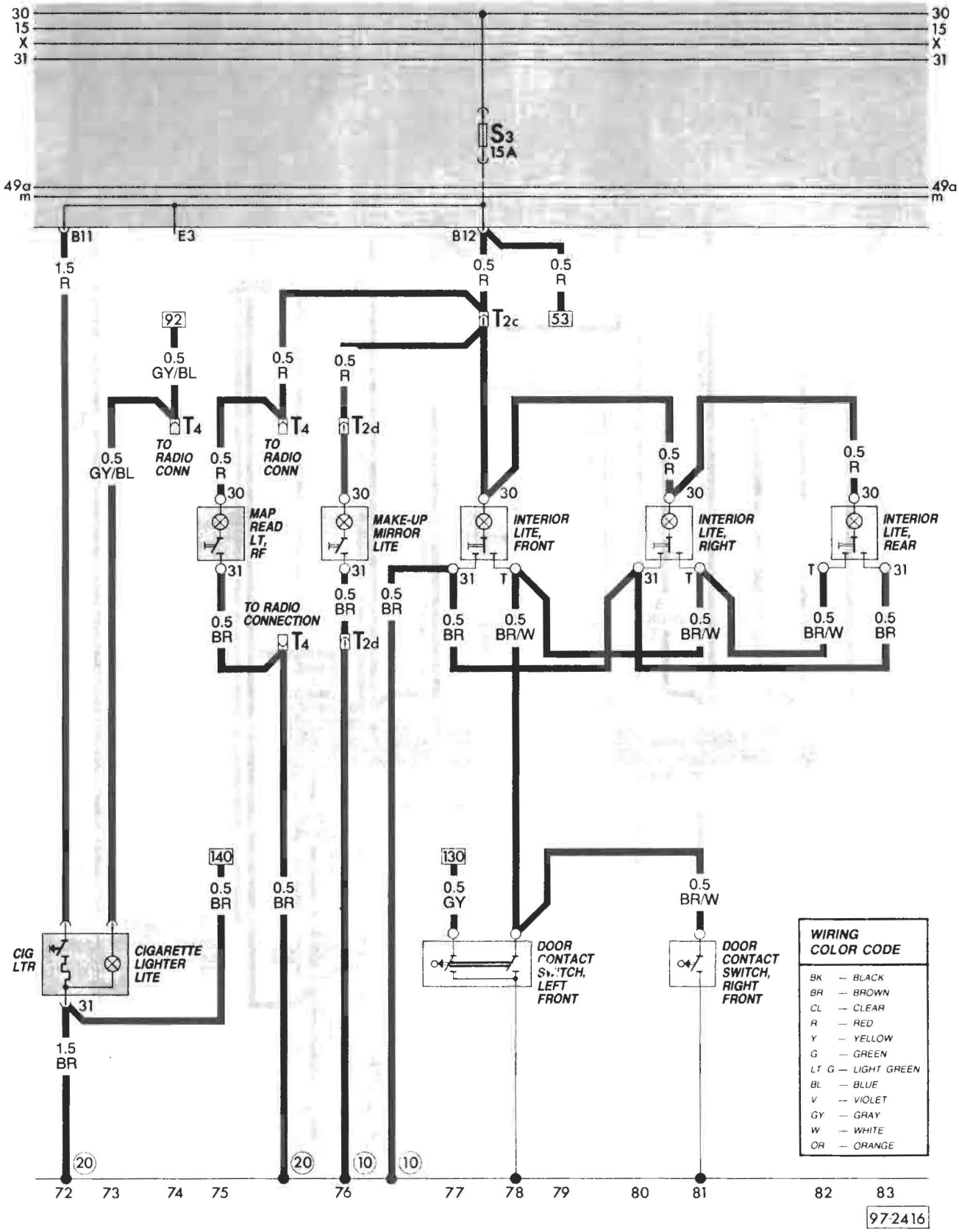

Water-cooled – Digifant 1986

Main wiring diagram
Interior lights
from VIN G 055 690

97.93

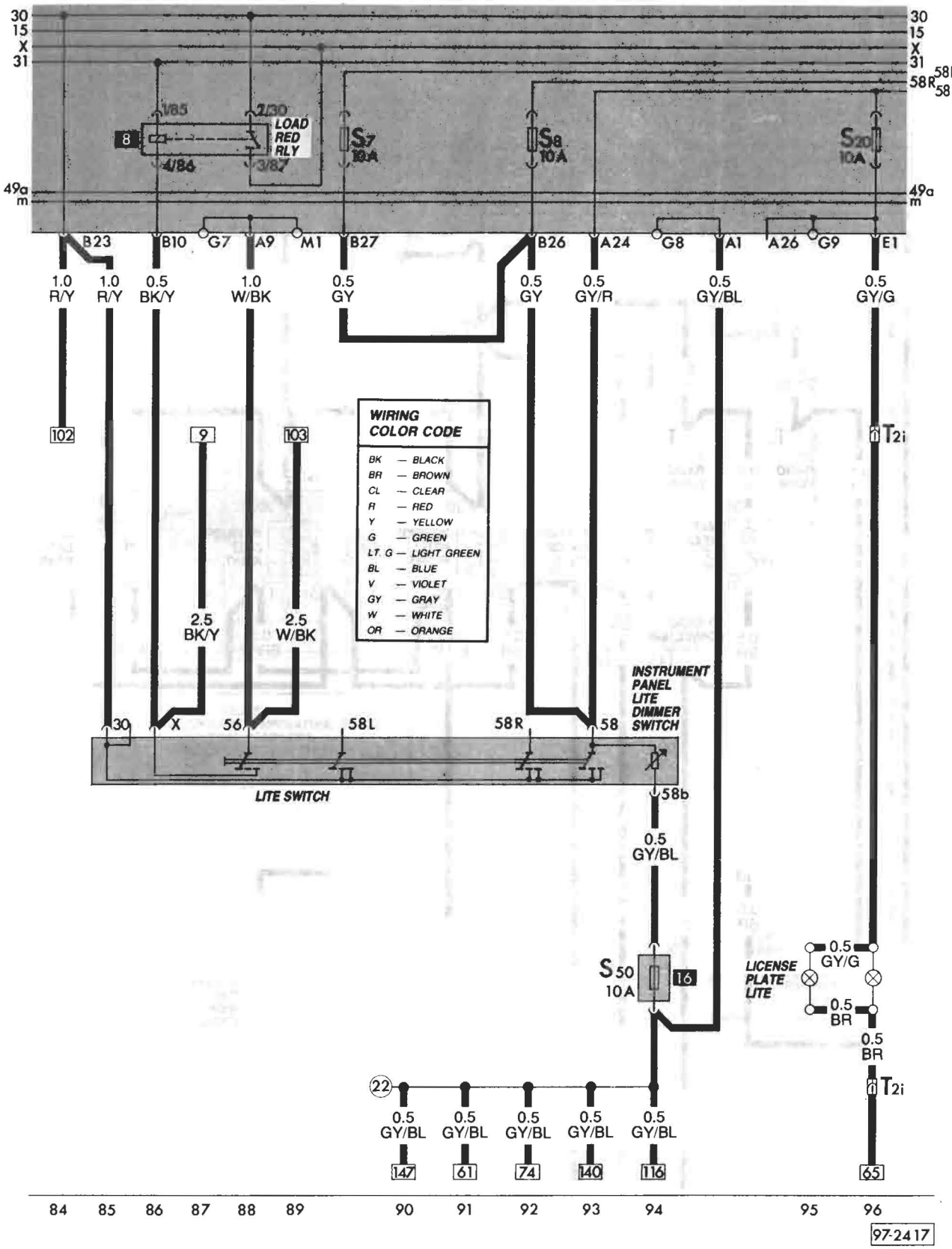

97.94 Main wiring diagram
Light switch
from VIN G 055 690

Water-cooled—Digifant 1986

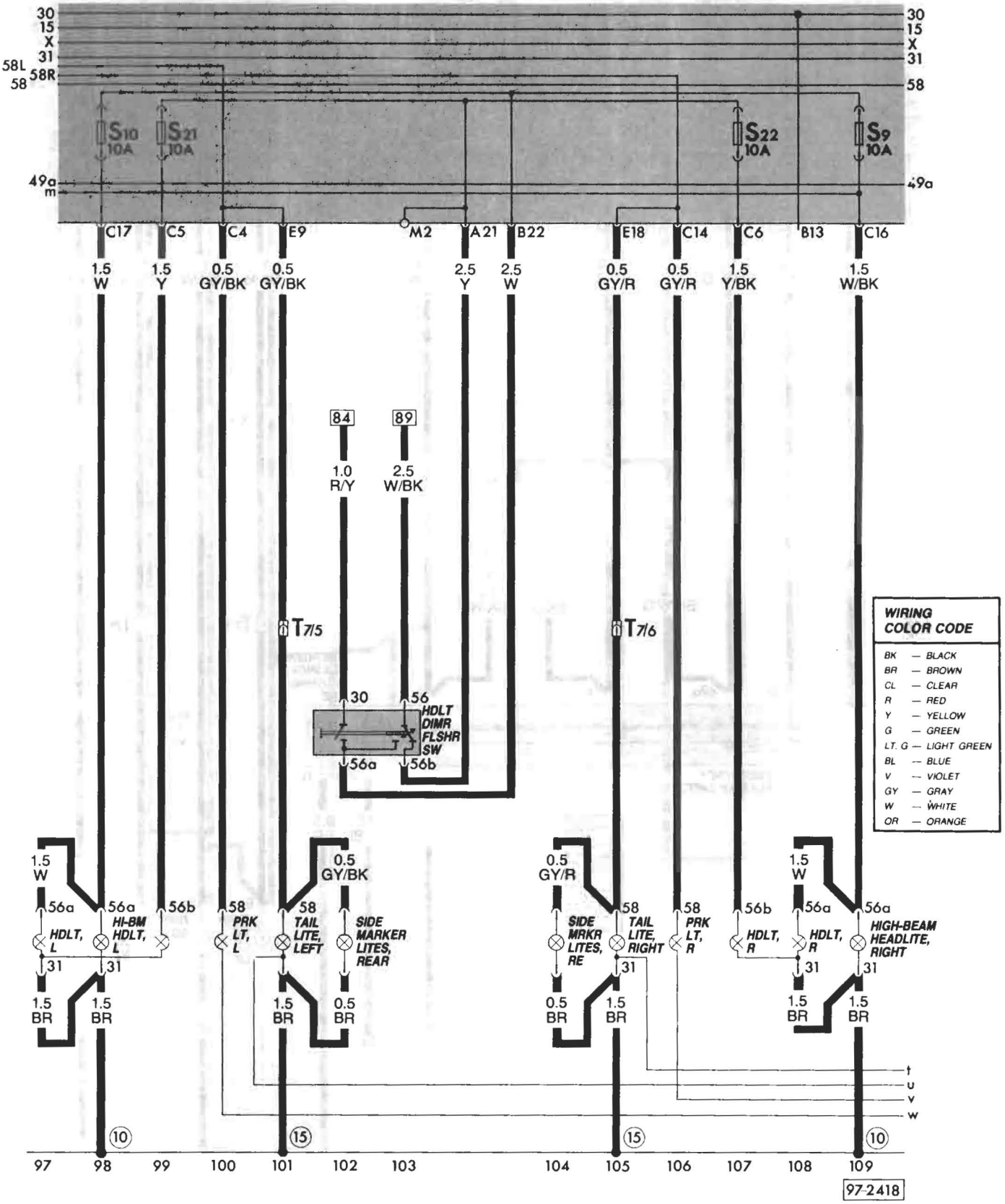

Water-cooled – Digifant 1986

Main wiring diagram
Exterior lights
from VIN G 055 690

97.95

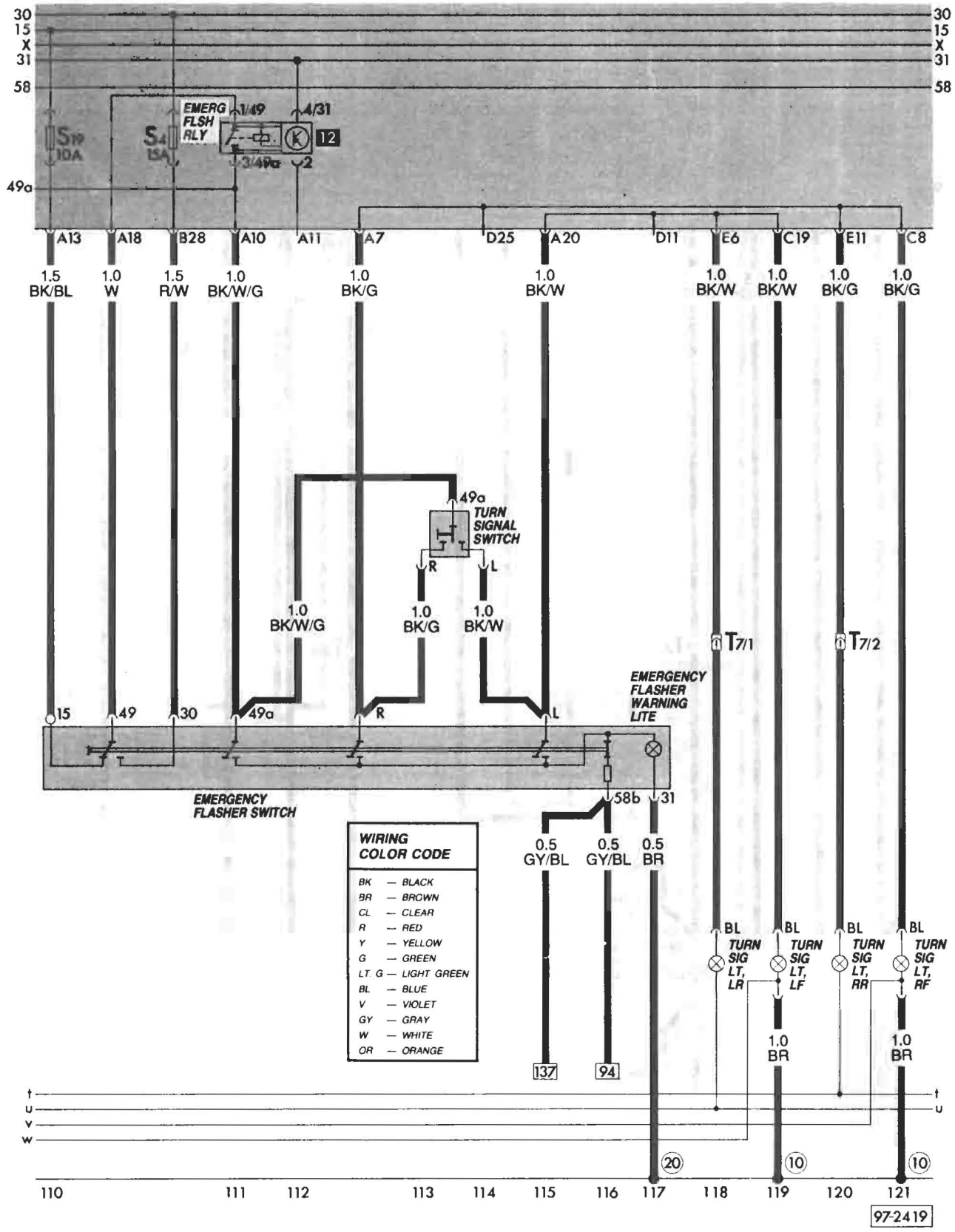

97.96 Main wiring diagram
Turn signals
from VIN G 055 690

Water-cooled – Digifant 1986

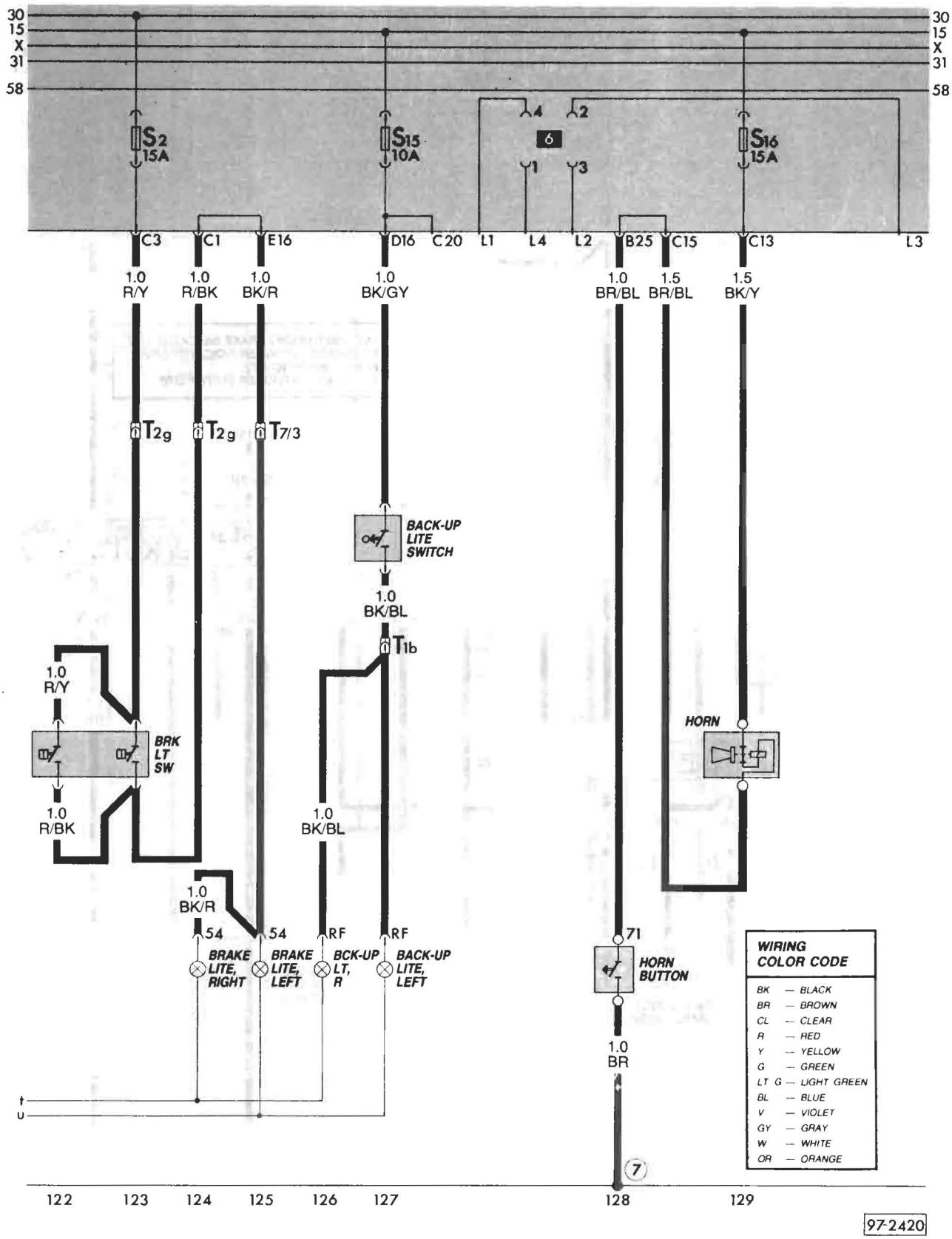

Water-cooled – Digifant 1986

Main wiring diagram
Brake lights/Horns
from VIN G 055 690

97.97

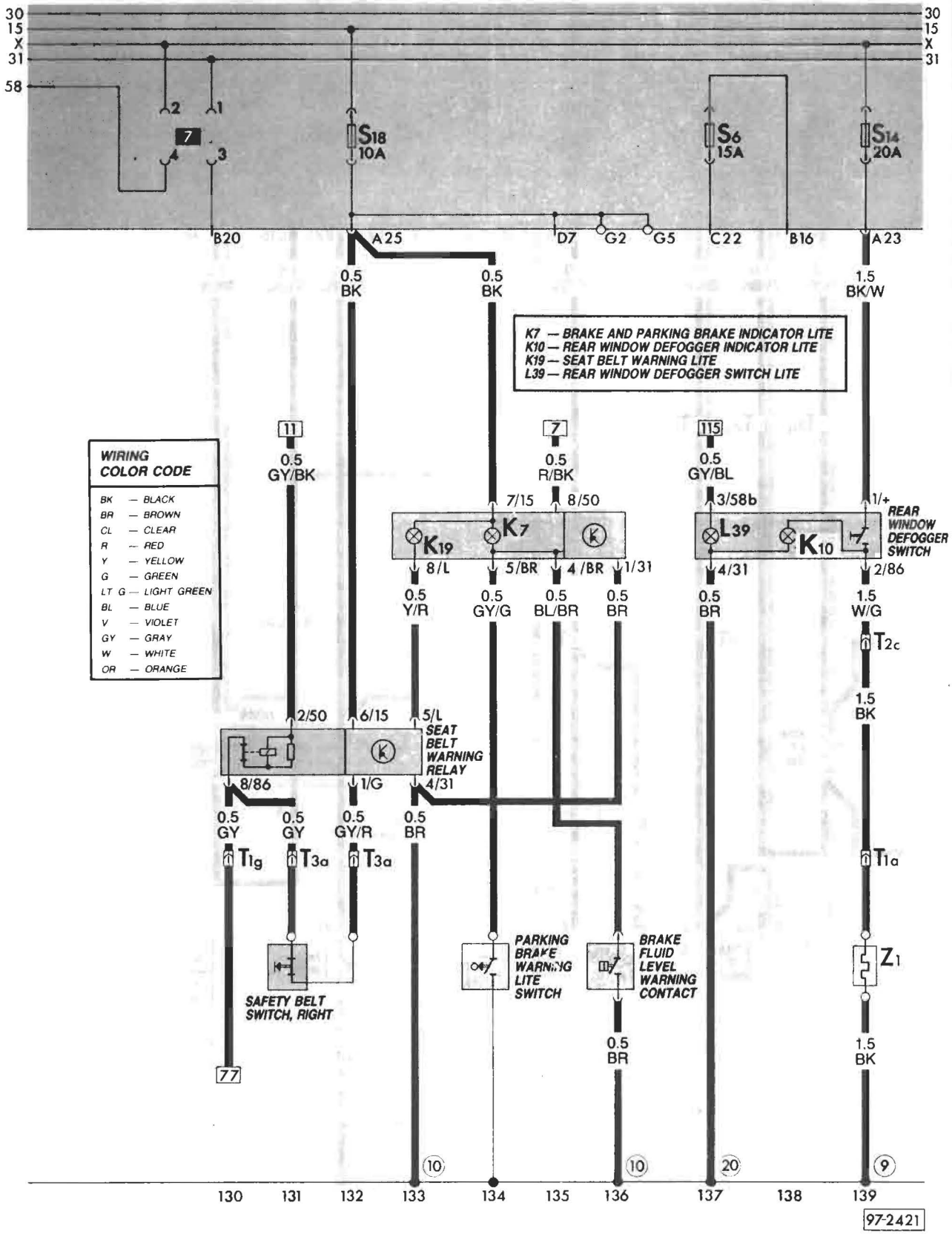
30
15
X
31
58
7
S18 10A
S6 15A
S14 20A
B20
A25
D7
G2
G5
C22
B16
A23
0.5 BK
0.5 BK
1.5 BK/W
K7 — BRAKE AND PARKING BRAKE INDICATOR LITE
K10 — REAR WINDOW DEFOGGER INDICATOR LITE
K19 — SEAT BELT WARNING LITE
L39 — REAR WINDOW DEFOGGER SWITCH LITE
WIRING COLOR CODE
BK — BLACK
BR — BROWN
CL — CLEAR
R — RED
Y — YELLOW
G — GREEN
LT G — LIGHT GREEN
BL — BLUE
V — VIOLET
GY — GRAY
W — WHITE
OR — ORANGE
11
0.5 GY/BK
7
0.5 R/BK
115
0.5 GY/BL
7/15
8/50
3/58b
1/+
REAR WINDOW DEFOGGER SWITCH
K19
K7
L39
K10
8/L
5/BR
4/BR
1/31
4/31
2/86
0.5 Y/R
0.5 GY/G
0.5 BL/BR
0.5 BR
0.5 BR
1.5 W/G
T2c
1.5 BK
2/50
6/15
5/L
SEAT BELT WARNING RELAY
8/86
1/G
4/31
0.5 GY
0.5 GY
0.5 GY/R
0.5 BR
T1g
T3a
T3a
T1a
SAFETY BELT SWITCH, RIGHT
PARKING BRAKE WARNING LITE SWITCH
BRAKE FLUID LEVEL WARNING CONTACT
Z1
0.5 BR
1.5 BK
77
10
10
20
9
130
131
132
133
134
135
136
137
138
139
97-2421

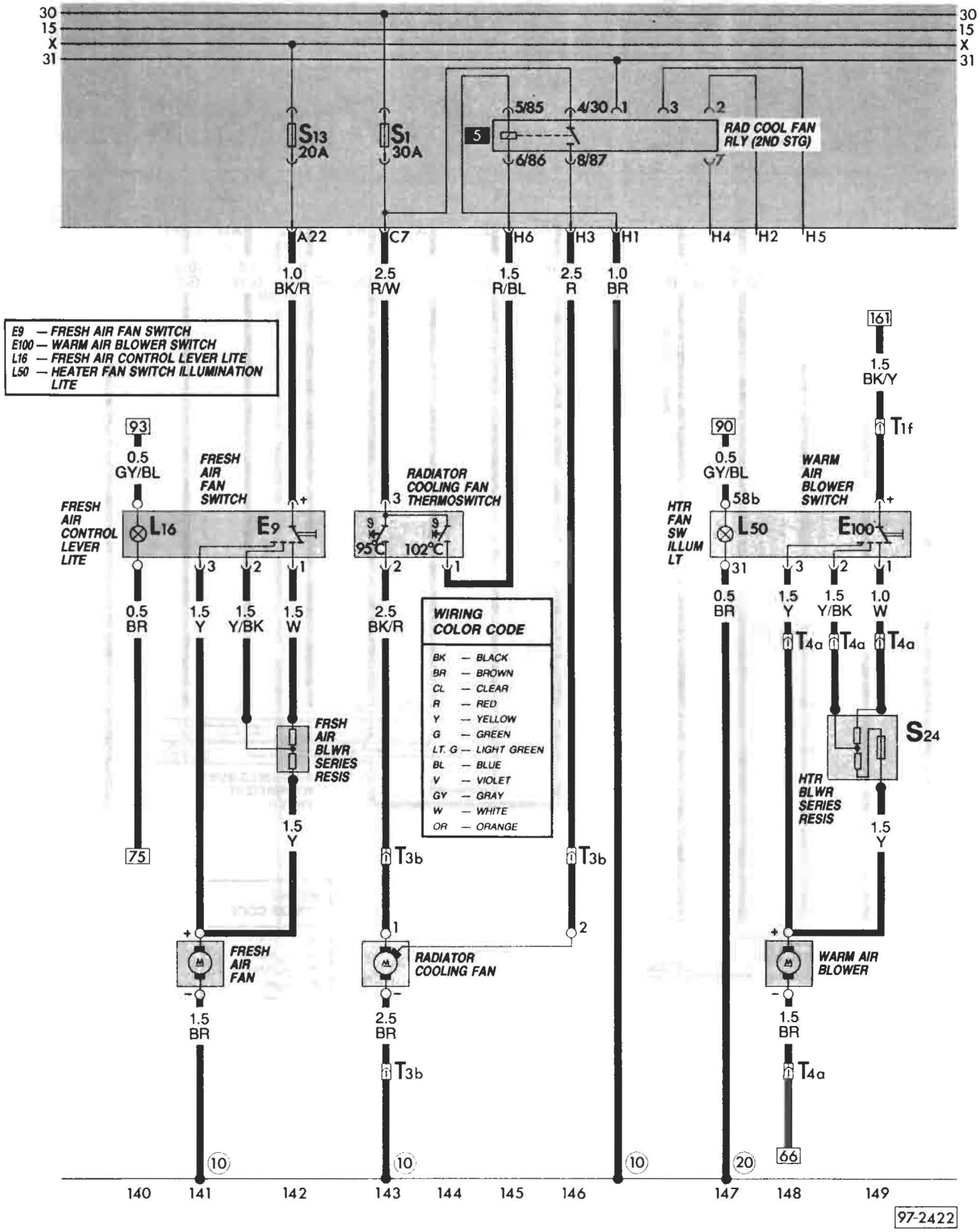
30
15
X
31
S13 20A
S1 30A
5
5/85
4/30
1
3
2
RAD COOL FAN RLY (2ND STG)
6/86
8/87
7
A22
C7
H6
H3
H1
H4
H2
H5
1.0 BK/R
2.5 R/W
1.5 R/BL
2.5 R
1.0 BR
E9 — FRESH AIR FAN SWITCH
E100 — WARM AIR BLOWER SWITCH
L16 — FRESH AIR CONTROL LEVER LITE
L50 — HEATER FAN SWITCH ILLUMINATION LITE
93
0.5 GY/BL
FRESH AIR FAN SWITCH
FRESH AIR CONTROL LEVER LITE
L16
E9
RADIATOR COOLING FAN THERMOSWITCH
95°C
102°C
161
1.5 BK/Y
T1f
90
0.5 GY/BL
WARM AIR BLOWER SWITCH
HTR FAN SW ILLUM LT
L50
E100
58b
31
0.5 BR
1.5 Y
1.5 Y/BK
1.0 W
2.5 BK/R
1.5 Y
T4a
T4a
T4a
WIRING COLOR CODE
BK — BLACK
BR — BROWN
CL — CLEAR
R — RED
Y — YELLOW
G — GREEN
LT. G — LIGHT GREEN
BL — BLUE
V — VIOLET
GY — GRAY
W — WHITE
OR — ORANGE
FRSH AIR BLWR SERIES RESIS
S24
HTR BLWR SERIES RESIS
75
T3b
T3b
FRESH AIR FAN
RADIATOR COOLING FAN
WARM AIR BLOWER
1.5 BR
2.5 BR
1.5 BR
T3b
T4a
10
10
10
20
66
140
141
142
143
144
145
146
147
148
149
97-2422

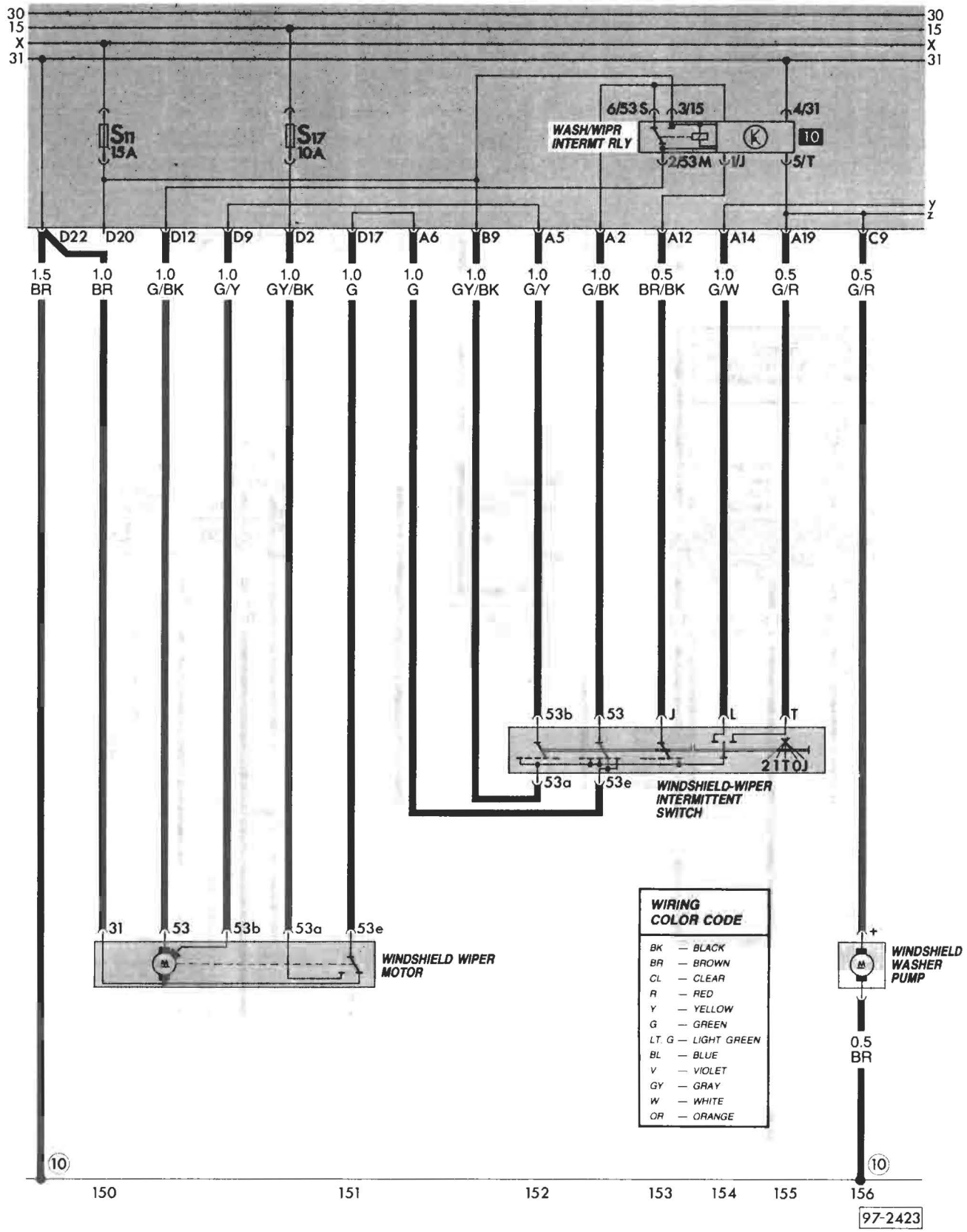

Main wiring diagram
Windshield wipers
from VIN G 055 690

Water-cooled – Digifant 1986

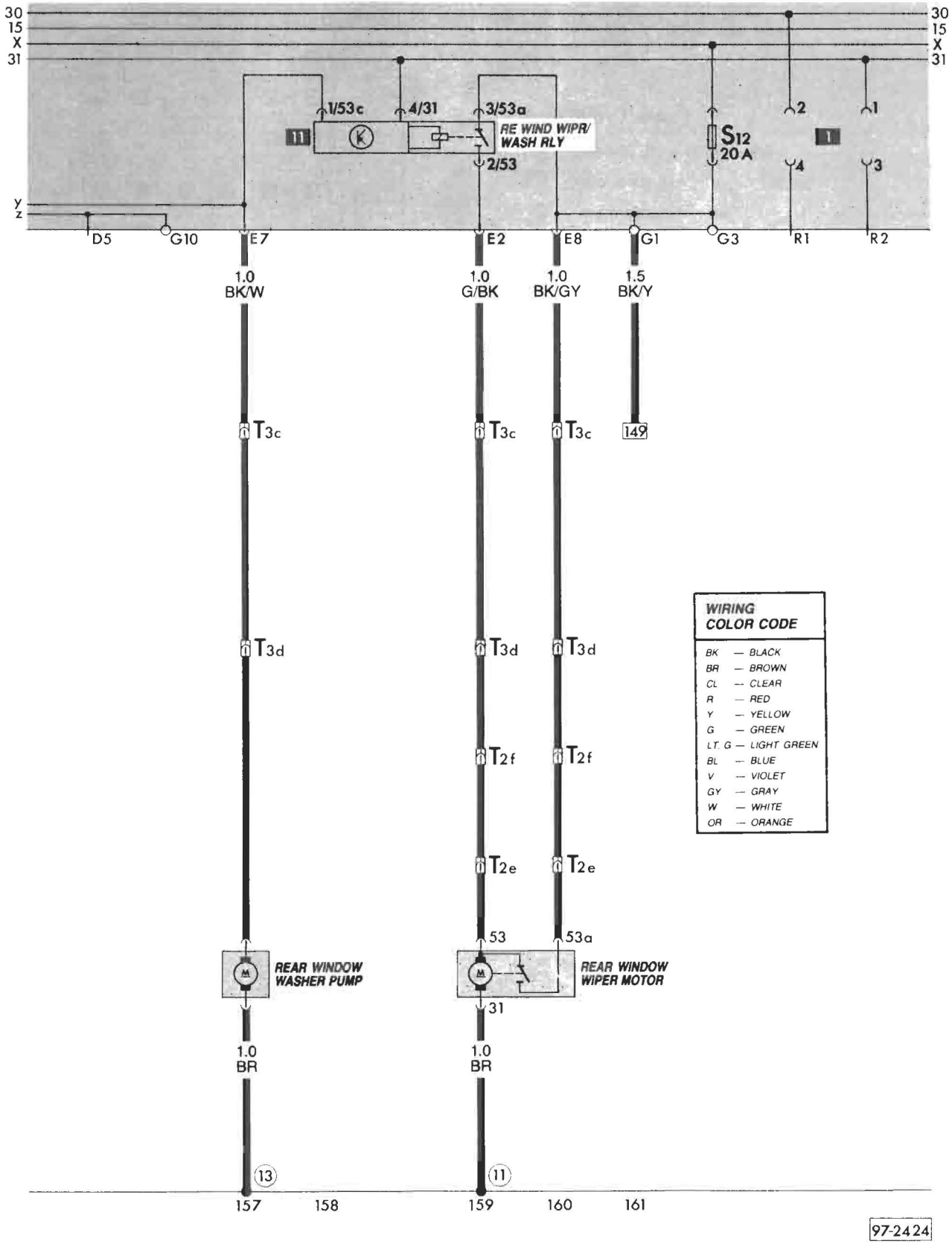

Water-cooled – Digifant 1986

Main wiring diagram
Reat window wiper
from VIN G 055 690

97.101

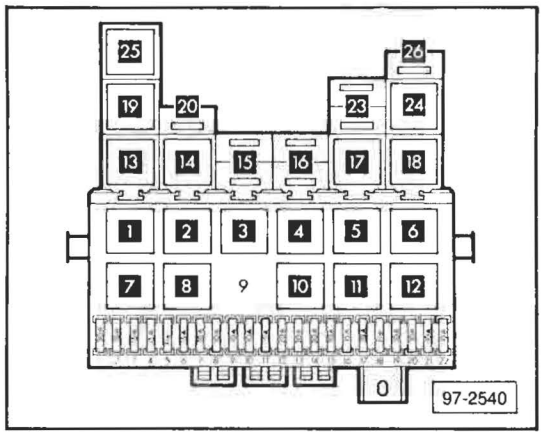

Fuse arrangement

according to numbers on fuse panel as seen from left to right:

		Amp.
1	Radiator fan	30
2	Stop lights	10
3	Cigarette lighter, radio, clock, interior lights, central locking system	10
4	Emergency flasher system	15
5	not connected	
6	Vacant	
7	Tail, parking and side marker lights, left	10
8	Tail, parking and side marker lights, right	10
9	High beam right, high beam indicator light	10
10	High beam left	10
11	Wind. wipers and washer	15
12	Heater fan, rear wiper, cruise control, A/C, outside rear view mirror adjustment	20
13	Fresh air fan	15
14	Rear window defogger	20
15	Back-up lights, shift console light (Auto. Transmission)	10
16	Horn (single tone)	15
17	Windshield wiper motor	10
18	Dual horn, coolant level and temp. warning light	10
19	Turn signals, brake warning light	10
20	License plate lights	10
21	Low beam left	10
22	Low beam right	10

Separate fuses above fuse panel

Power windows	30
A/C	30

Fuse/Relay Panel

- 3 — coolant level control unit
- 5 — rad. cool. fan relay, 2nd stage
- 8 — load reduction relay
- 10 — intermitt. wash/wiper relay
- 11 — rear window wash/wiper realy
- 12 — emerg. flash/turn sig. relay
- 13 — not used
- 16 — fuse, terminal 58b

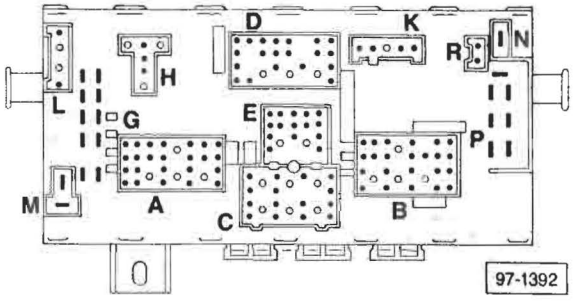

Connections and plugs on fuse/relay panel

- A — multi-point connector (blue) for instrument panel wiring harness
- B — multi-point connector (red) for instrument panel wiring harness
- C — multi-point connector (yellow) for front wiring harness
- D — multi-point connector (white) for windshield wiper and main wiring harness
- E — multi-point connector (black) for main wiring harness
- G — single connector
- H — multi-point connector (brown) to connector for rad. cool. fan relay, 2nd stage
- K — multi-point connector (colorless) to radiator coolant low-level control unit
- L — multi-point connector (gray) for horns
- M — open position
- N — single connector
- P — single connector (terminal 30)
- R — open position

Description	Current track
A/C compressor overheat fuse	151
Air flow sensor potentiometer	22-24
Alternator	5
Alternator warning lite	51
Back-up lite switch	128
Back-up lite, left	128
Back-up lite, right	129
Battery	1
Brake and parking brake indicator lite	137
Brake fluid level warning contact	138
Brake lite switch	125,126
Brake lite, left	127
Brake lite, right	126
CAT elapsed mileage counter	45,46
Cigarette lighter	72
Cigarette lighter lite	73
Clock lite	61
Coolant low level control unit	68,69
Coolant low level warning switch	68
Coolant overheat warning lite	66
Coolant temperature gauge	65
Coolant temperature sending unit	70
Digifant control unit	16-27
Digijet control unit relay	32-34
Digital clock	53
Door contact switch, left front	77,78
Door contact switch, right front	81
Emergency flasher relay	114,115
Emergency flasher switch	111-120
Emergency flasher warning lite	120
Engine oil pressure control unit	55,56
Engine oil pressure switch (0.3 bar)	48
Engine oil pressure switch (0.9 bar)	47
Engine oil pressure warning lite	57
Fresh air blower series resistance	144
Fresh air control lever lite	142
Fresh air fan	143,144
Fresh air fan switch	142-144
Fuel gauge	64
Fuel gauge sending unit	71
Fuel pump	31
Fuel pump relay	30,31
Fuse	12
Hall generator	17-19
Headlite dimmer/flasher switch	103,104
Headlite high beam warning lite	63
Headlite, left	98,100
Headlite, right	108,110
Heater blower series resistance	151,152
Heater fan switch illumination lite	149
Heating element (crankcase ventilation)	12
High-beam headlite, left	99
High-beam headlite, right	109
Horn button	130
Horns	132
Idle speed stabilizer valve	40,41
Idle stabilizer control unit	36-42
Ignition coil	14
Ignition distributor	13-15
Ignition/starter switch	8-11
Injector, cyl. 1	27
Injector, cyl. 2	28
Injector, cyl. 3	29
Injector, cyl. 4	30
Instrument panel lite	58-60

Description	Current track
Instrument panel lite dimmer switch	95
Interior lite, front	77,78
License plate lite	96,97
Lite switch	85-95
Load reduction relay	86-88
Make-up mirror lite	76
Map/reading lite, right front	75
OXS elapsed mileage indicator	52
Oxygen sensor	25,26
Parking brake warning lite switch	137
Parking lite, left	101
Parking lite, right	107
Power steering pressure switch	36,37
Radiator cooling fan	145
Radiator cooling fan relay (2nd stage)	147-150
Radiator cooling fan thermoswitch	145, 146
Reading lite, behind driver's seat	80,81
Reading lite, left rear	82,83
Rear window defogger indicator lite	140
Rear window defogger switch	139-141
Rear window defogger switch lite	139
Rear window heater element	141
Rear window washer pump	160
Rear window wiper motor	162,163
Rear window wiper/washer relay	161,162
Safety belt switch, left	134
Seat belt warning lite	136
Seat belt warning relay	133-136
Side marker lites, rear	104,105
Spark plug connectors	13-15
Spark plugs	13-15
Starter	3,4
T.D.C. sensor	43,44
Tachometer	54
Tail lite, left	102
Tail lite, right	106
Temperature sensor II	21
Terminal 58b fuse	95
Throttle valve switch (enrichment)	20
Turn signal indicator lite	62
Turn signal lite, left front	122
Turn signal lite, left rear	121
Turn signal lite, right front	124
Turn signal lite, right rear	123
Turn signal switch	116,117
Voltage regulator	5
Voltage stabilizer	64
Warm air blower	150-152
Warm air blower switch	149-152
Washer/wiper intermittent relay	156-158
Windshield washer pump	159
Windshield wiper motor	153,154
Windshield-wiper intermittent switch	155-158

Wire connectors

T1a — single, near left rear roof bow
T1b — single, in wire distrib., eng. compart.
T1d — single, in wire distrib., eng. compart.
T1e — single, under inst. panel, left
T1f — single, under inst. panel
T1g — single, in wire distrib., eng. compart.
T1h — single, in eng. compart., left
T1i — single, under inst. panel
T1k — single, in eng. compart., left

Wire connectors

T2c — double, under inst. panel, left
T2d — double, under upper right 'A' pillar
T2e — double, in decklid near washer motor
T2f — double, under upper right 'C' pillar cover
T2g — double, under inst. panel
T2i — double, in wire distrib., eng compart.
T2k — double, eng. compart., left
T2m — double, in relay plate, eng. compart.
T2o — double, near seat belt switch
T2p — double, near horn
T2x — double, eng. compart., middle

T3 — three-point, near alternator
T3a — three-point, under inst. panel, right
T3b — three-point, under inst. panel, left
T3d — three-point, behind upper front grille
T3x — three point, under inst. panel

T7/ — seven point, in wire distrib., eng. compart.
T7a/ — seven point, in wire distrib., eng. compart.

T14/ — fourteen point, on inst. cluster

Ground connections

(1) — battery to body
(2) — transmission to body
(12) — in eng. compart., left
(18) — on engine block
(23) — ground cable, above steering box
(29) — near Digifant control unit
(30) — under relay panel
(52) — in rear decklid, left
(53) — in rear decklid, right
(56) — near rear washer bottle bracket
(58) — near rear wiper motor
(79) — near left rear decklid hinge
(81) — in inst. panel wiring harness
(94) — in Digifant wiring harness

Plus (+) connections

(P1) — (term. 30) in wire distrib., eng. compart.
(G1) — in Digifant wiring harness
(G2) — in Digifant wiring harness
(A4) — (term. 586) in inst. panel wiring harness

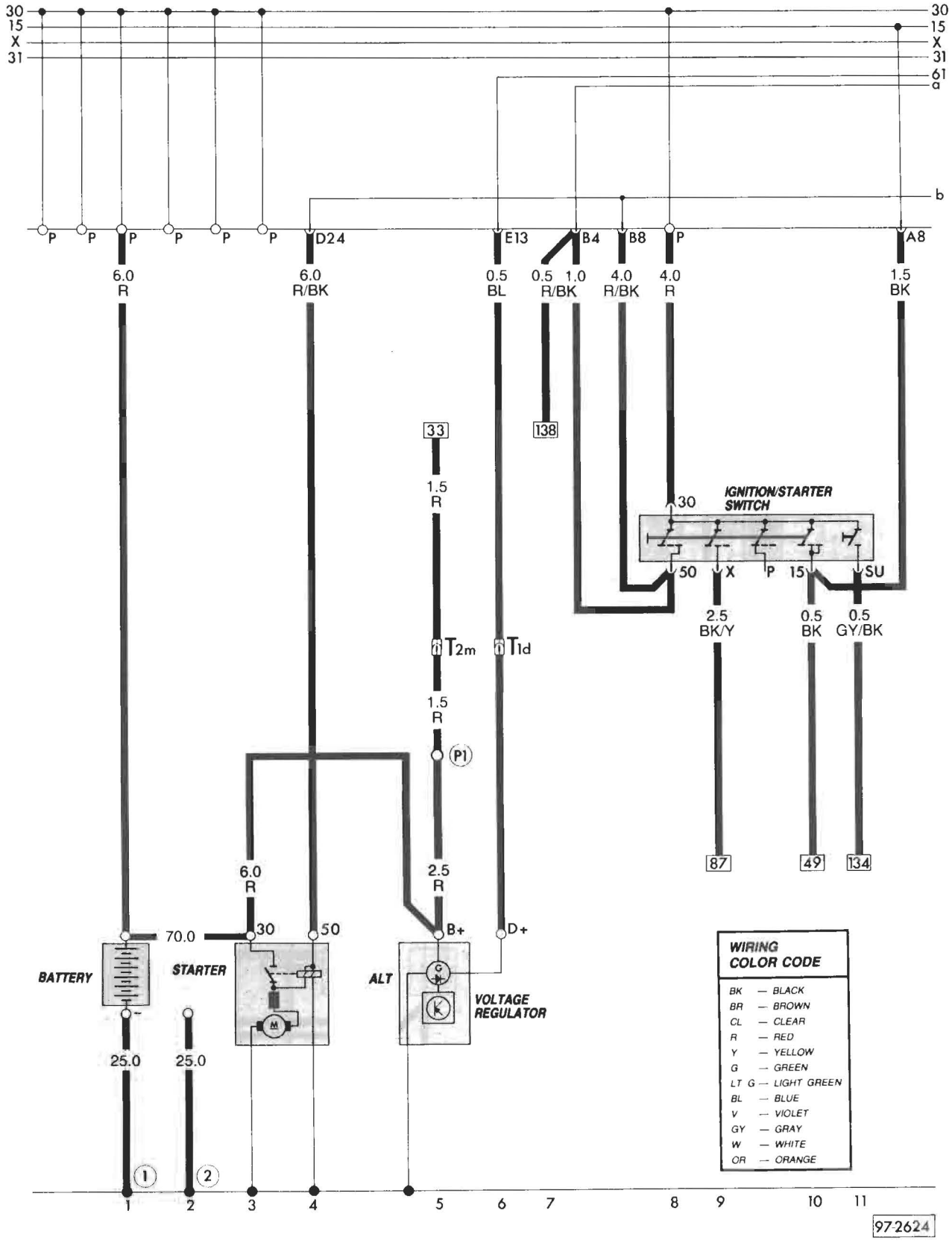

Water-cooled—Digifant 1987

Main wiring diagram
Alternator/Starter/
Ignition switch

97.104

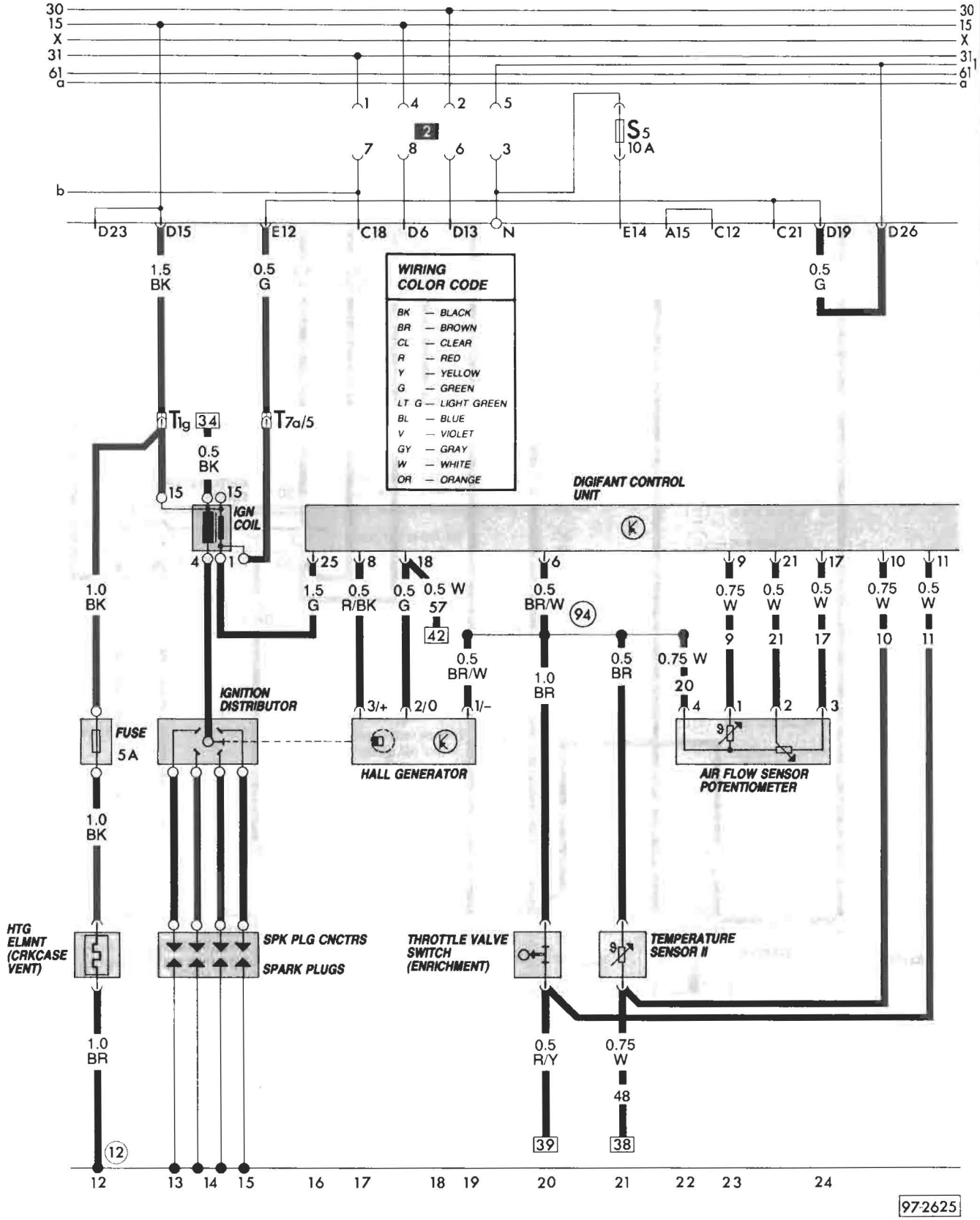
30
15
X
31
61a
S5
10 A
D23
D15
E12
C18
D6
D13
N
E14
A15
C12
C21
D19
D26
WIRING COLOR CODE
BK — BLACK
BR — BROWN
CL — CLEAR
R — RED
Y — YELLOW
G — GREEN
LT G — LIGHT GREEN
BL — BLUE
V — VIOLET
GY — GRAY
W — WHITE
OR — ORANGE
DIGIFANT CONTROL UNIT
IGN COIL
IGNITION DISTRIBUTOR
FUSE
5A
HALL GENERATOR
AIR FLOW SENSOR POTENTIOMETER
HTG ELMNT (CRKCASE VENT)
SPK PLG CNCTRS
SPARK PLUGS
THROTTLE VALVE SWITCH (ENRICHMENT)
TEMPERATURE SENSOR II
97-2625

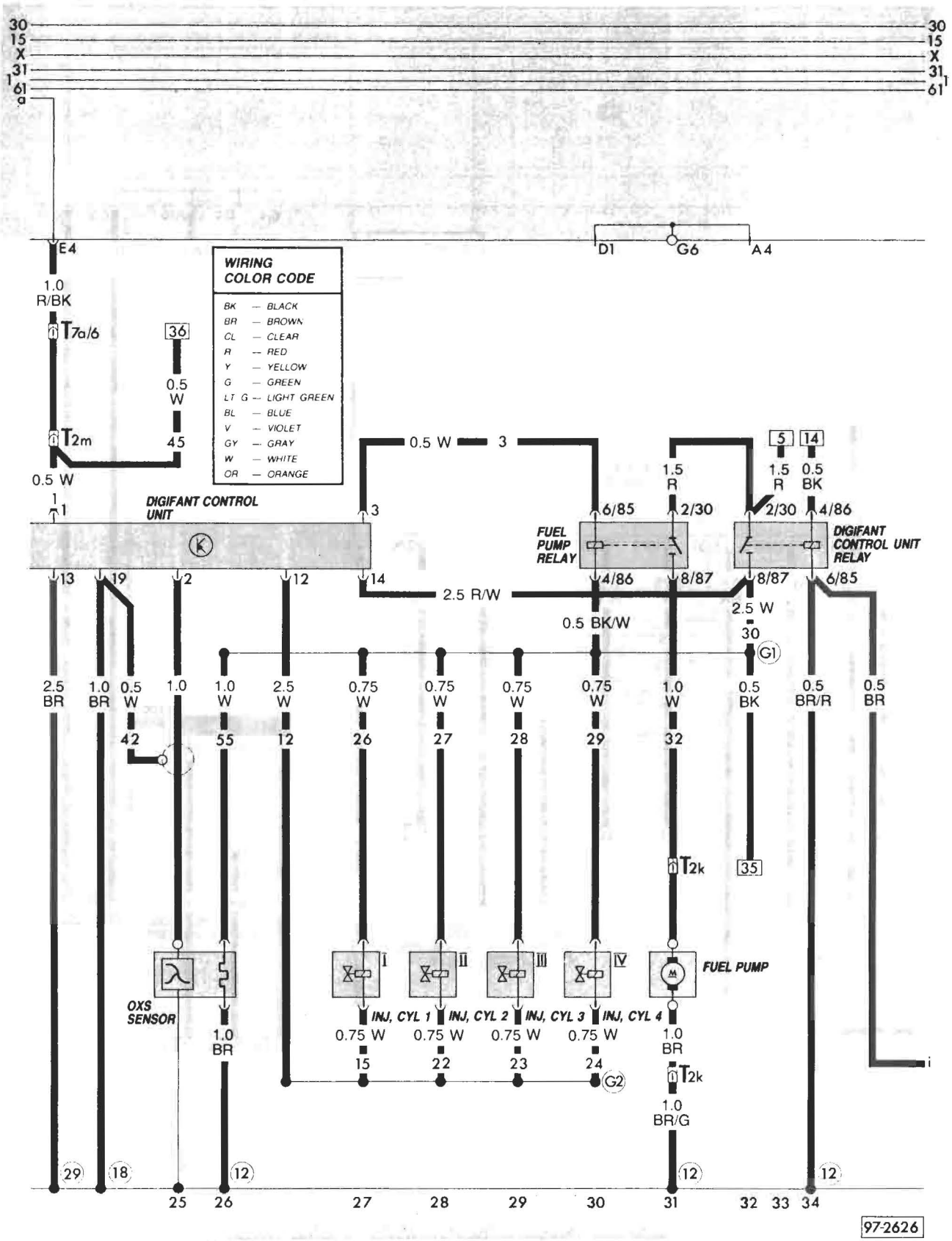

Water-cooled – Digifant 1987

Main wiring diagram
Digifant injection system

97.106

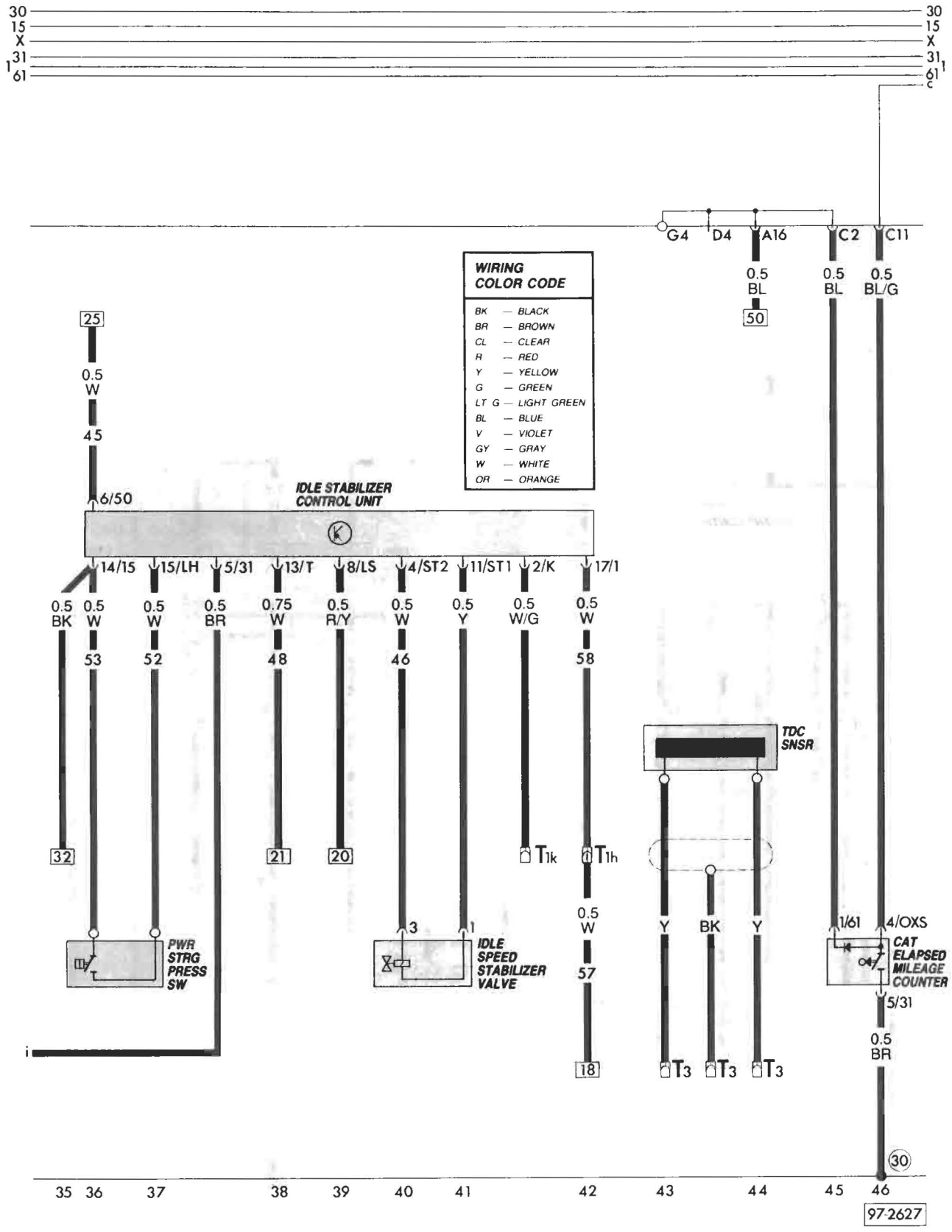
30
15
X
31
61
WIRING COLOR CODE
BK — BLACK
BR — BROWN
CL — CLEAR
R — RED
Y — YELLOW
G — GREEN
LT G — LIGHT GREEN
BL — BLUE
V — VIOLET
GY — GRAY
W — WHITE
OR — ORANGE
G4
D4
A16
C2
C11
0.5 BL
50
0.5 BL
0.5 BL/G
25
0.5 W
45
6/50
IDLE STABILIZER CONTROL UNIT
14/15
15/LH
5/31
13/T
8/LS
4/ST2
11/ST1
2/K
17/1
0.5 BK
0.5 W
0.5 W
0.5 BR
0.75 W
0.5 R/Y
0.5 W
0.5 Y
0.5 W/G
0.5 W
53
52
48
46
58
32
21
20
T1k
T1h
TDC SNSR
PWR STRG PRESS SW
3
1
IDLE SPEED STABILIZER VALVE
0.5 W
57
18
Y
BK
Y
T3
T3
T3
1/61
4/OXS
CAT ELAPSED MILEAGE COUNTER
5/31
0.5 BR
30
35
36
37
38
39
40
41
42
43
44
45
46
97-2627

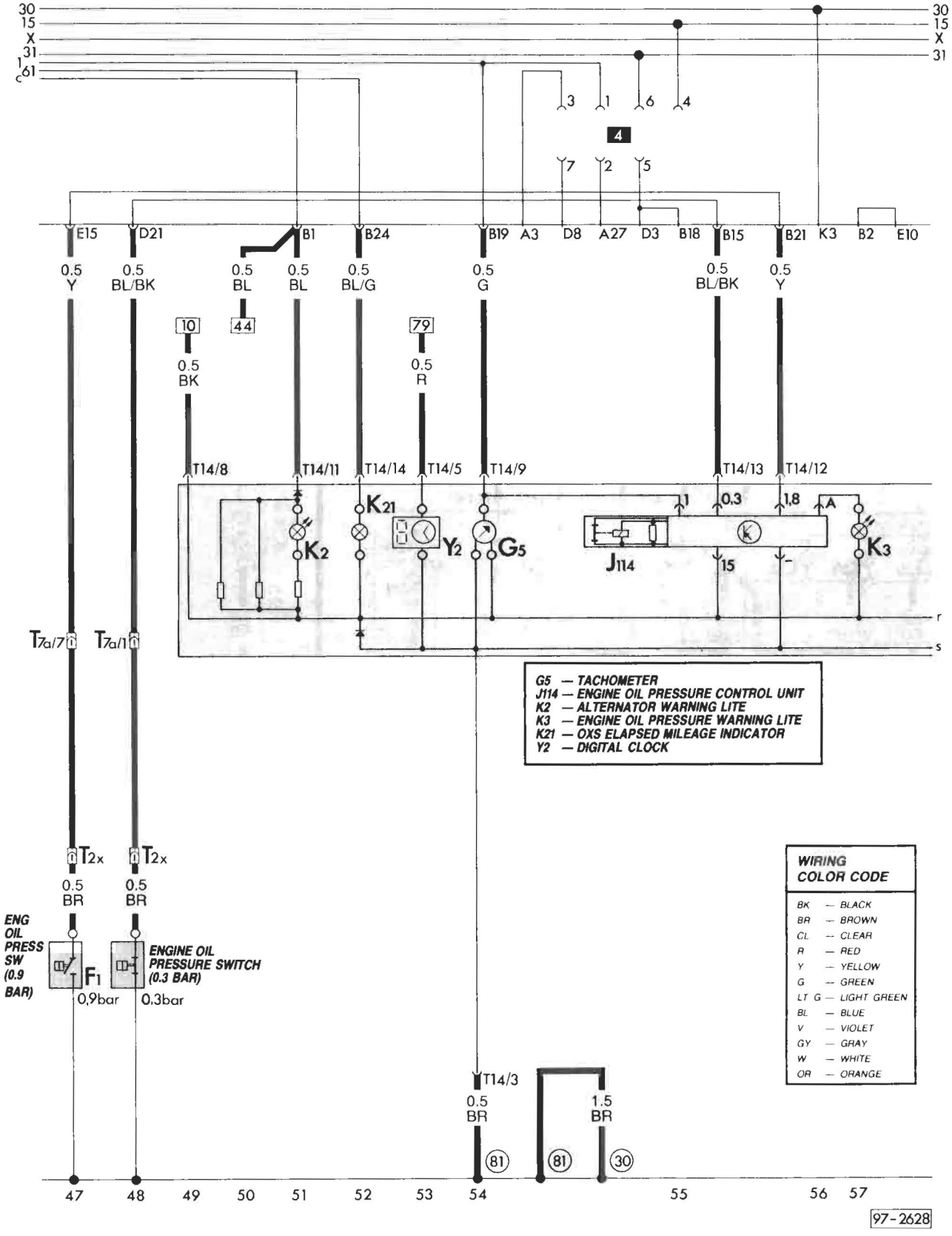
30
15
X
31
1
61
E15
D21
B1
B24
B19
A3
D8
A27
D3
B18
B15
B21
K3
B2
E10
0.5 Y
0.5 BL/BK
0.5 BL
0.5 BL
0.5 BL/G
0.5 G
0.5 BL/BK
0.5 Y
10
44
79
0.5 BK
0.5 R
T14/8
T14/11
T14/14
T14/5
T14/9
T14/13
T14/12
K2
K21
Y2
G5
J114
K3
T7a/7
T7a/1
T2x
0.5 BR
ENG OIL PRESS SW (0.9 BAR)
F1
0,9bar
ENGINE OIL PRESSURE SWITCH (0.3 BAR)
0.3bar
T14/3
0.5 BR
1.5 BR
81
30
47
48
49
50
51
52
53
54
55
56
57
G5 — TACHOMETER
J114 — ENGINE OIL PRESSURE CONTROL UNIT
K2 — ALTERNATOR WARNING LITE
K3 — ENGINE OIL PRESSURE WARNING LITE
K21 — OXS ELAPSED MILEAGE INDICATOR
Y2 — DIGITAL CLOCK
WIRING COLOR CODE
BK — BLACK
BR — BROWN
CL — CLEAR
R — RED
Y — YELLOW
G — GREEN
LT G — LIGHT GREEN
BL — BLUE
V — VIOLET
GY — GRAY
W — WHITE
OR — ORANGE
97-2628

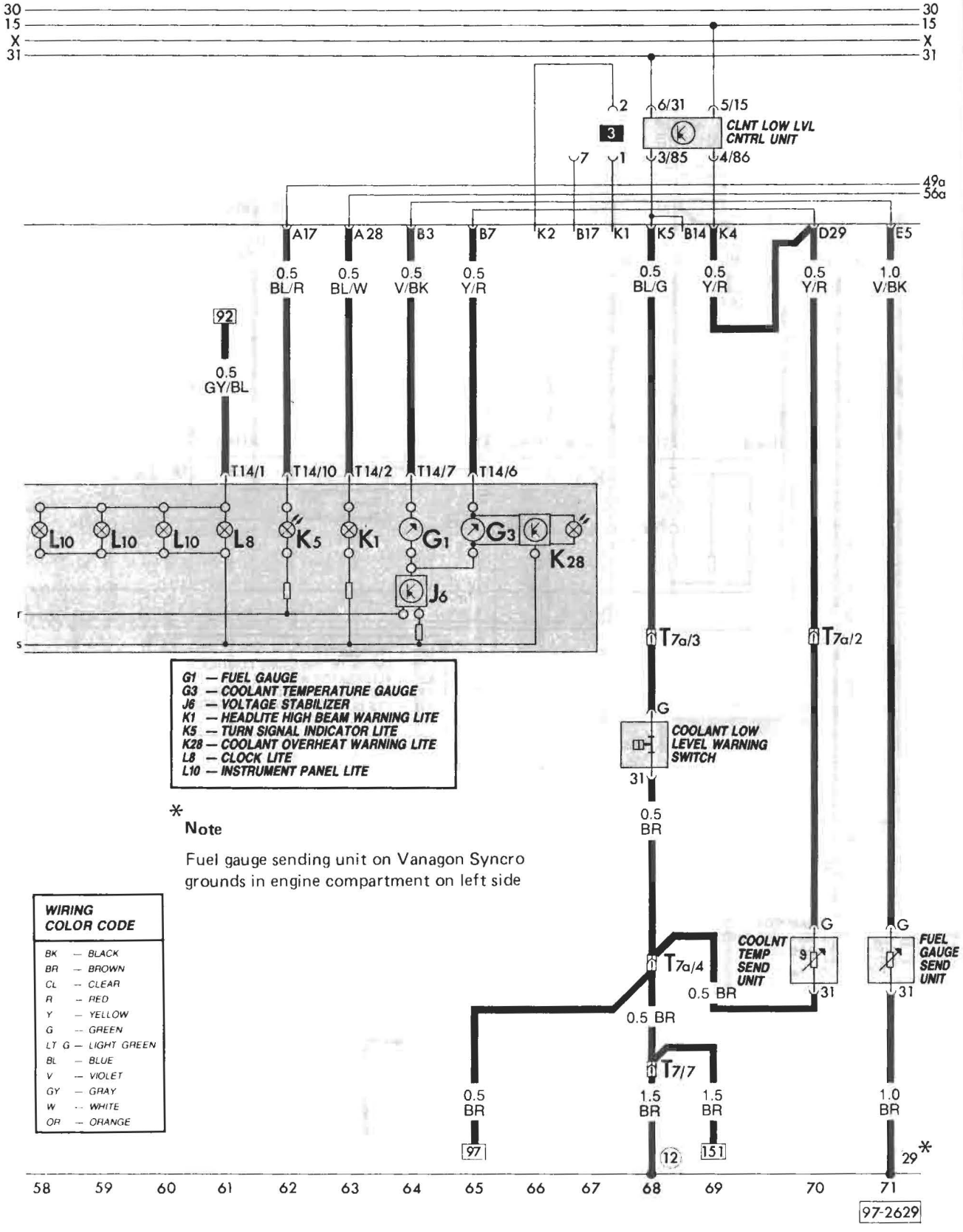

* **Note**

Fuel gauge sending unit on Vanagon Syncro grounds in engine compartment on left side

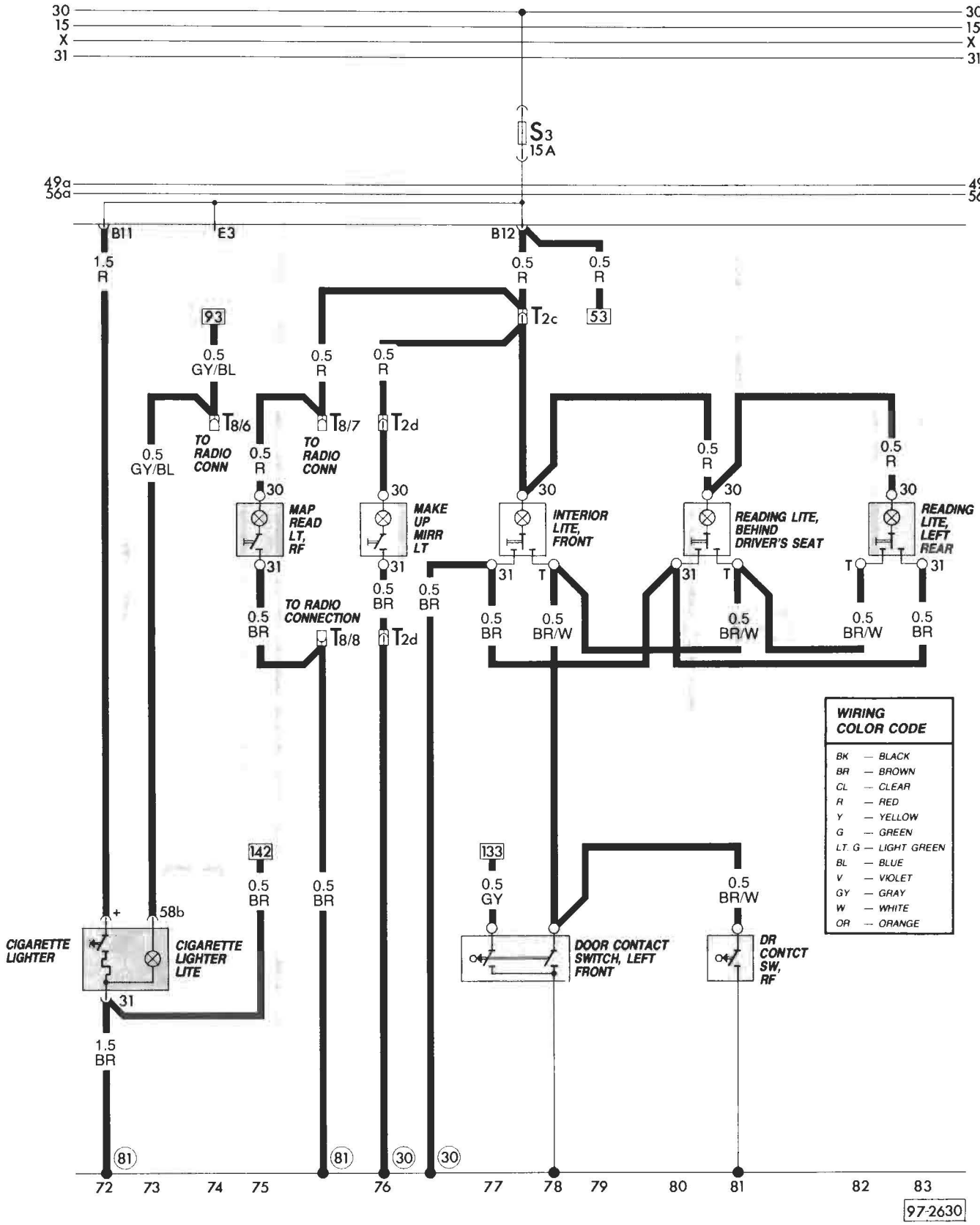
30
15
X
31
S3
15A
49a
56a
B11
E3
B12
1.5 R
0.5 R
0.5 R
93
53
T2c
0.5 GY/BL
T8/6
T8/7
T2d
TO RADIO CONN
MAP READ LT, RF
MAKE UP MIRR LT
INTERIOR LITE, FRONT
READING LITE, BEHIND DRIVER'S SEAT
READING LITE, LEFT REAR
TO RADIO CONNECTION
T8/8
0.5 BR
0.5 BR/W
142
133
0.5 GY
CIGARETTE LIGHTER
CIGARETTE LIGHTER LITE
58b
1.5 BR
DOOR CONTACT SWITCH, LEFT FRONT
DR CONTCT SW, RF
81
30
72 73 74 75 76 77 78 79 80 81 82 83
97-2630
WIRING COLOR CODE
BK — BLACK
BR — BROWN
CL — CLEAR
R — RED
Y — YELLOW
G — GREEN
LT. G — LIGHT GREEN
BL — BLUE
V — VIOLET
GY — GRAY
W — WHITE
OR — ORANGE

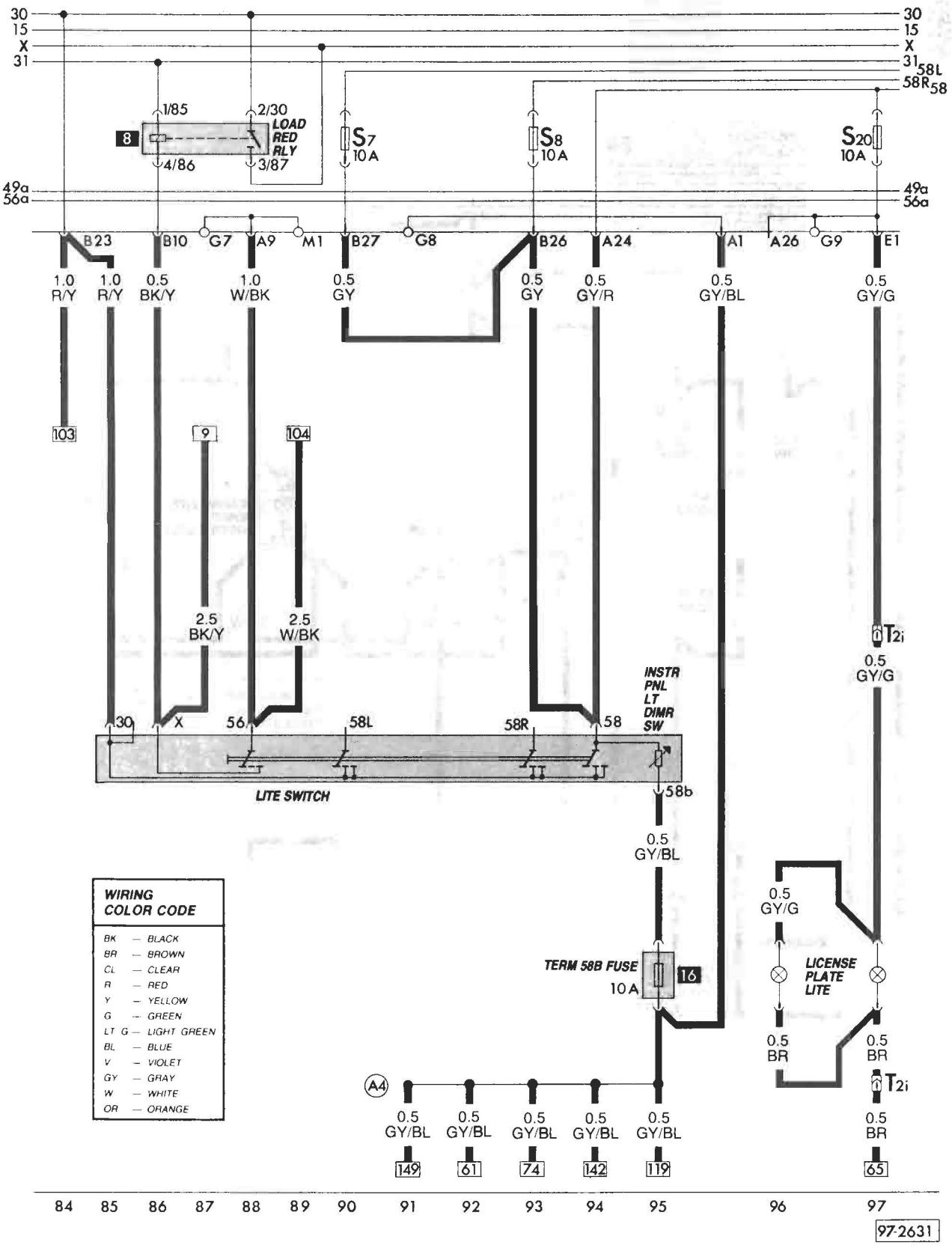

97.111 Main wiring diagram
Load reduction relay,
Light switch

Water-cooled – Digifant 1987

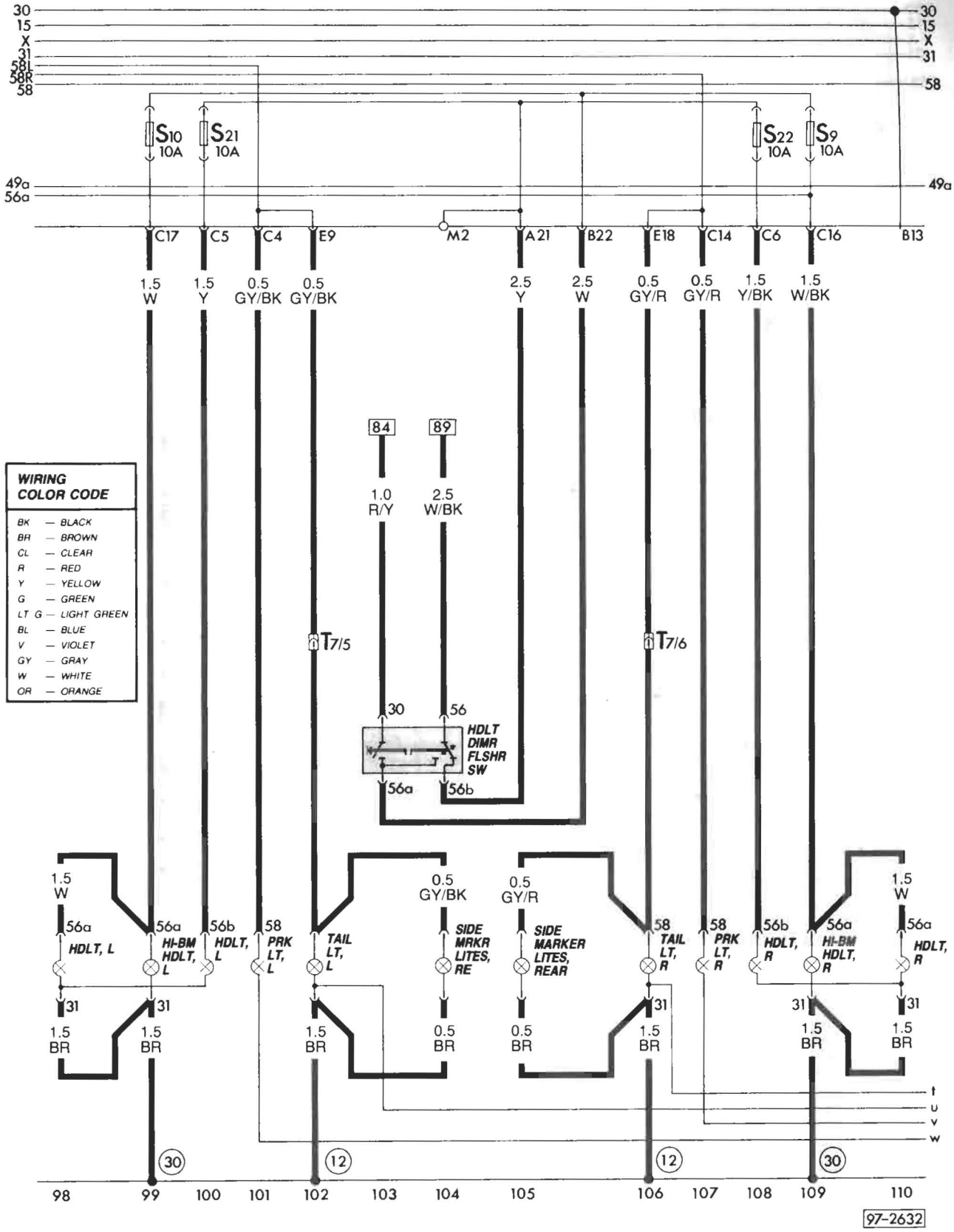
30
15
X
31
58L
58R
58
49a
56a
S10 10A
S21 10A
S22 10A
S9 10A
C17
C5
C4
E9
M2
A21
B22
E18
C14
C6
C16
B13
1.5 W
1.5 Y
0.5 GY/BK
0.5 GY/BK
2.5 Y
2.5 W
0.5 GY/R
0.5 GY/R
1.5 Y/BK
1.5 W/BK
84
89
1.0 R/Y
2.5 W/BK
T7/5
T7/6
30
56
HDLT DIMR FLSHR SW
56a
56b
WIRING COLOR CODE
BK — BLACK
BR — BROWN
CL — CLEAR
R — RED
Y — YELLOW
G — GREEN
LT G — LIGHT GREEN
BL — BLUE
V — VIOLET
GY — GRAY
W — WHITE
OR — ORANGE
HDLT, L
HI-BM HDLT, L
HDLT, L
PRK LT, L
TAIL LT, L
SIDE MRKR LITES, RE
SIDE MARKER LITES, REAR
TAIL LT, R
PRK LT, R
HDLT, R
HI-BM HDLT, R
HDLT, R
31
1.5 BR
0.5 BR
t
u
v
w
30
12
98
99
100
101
102
103
104
105
106
107
108
109
110
97-2632

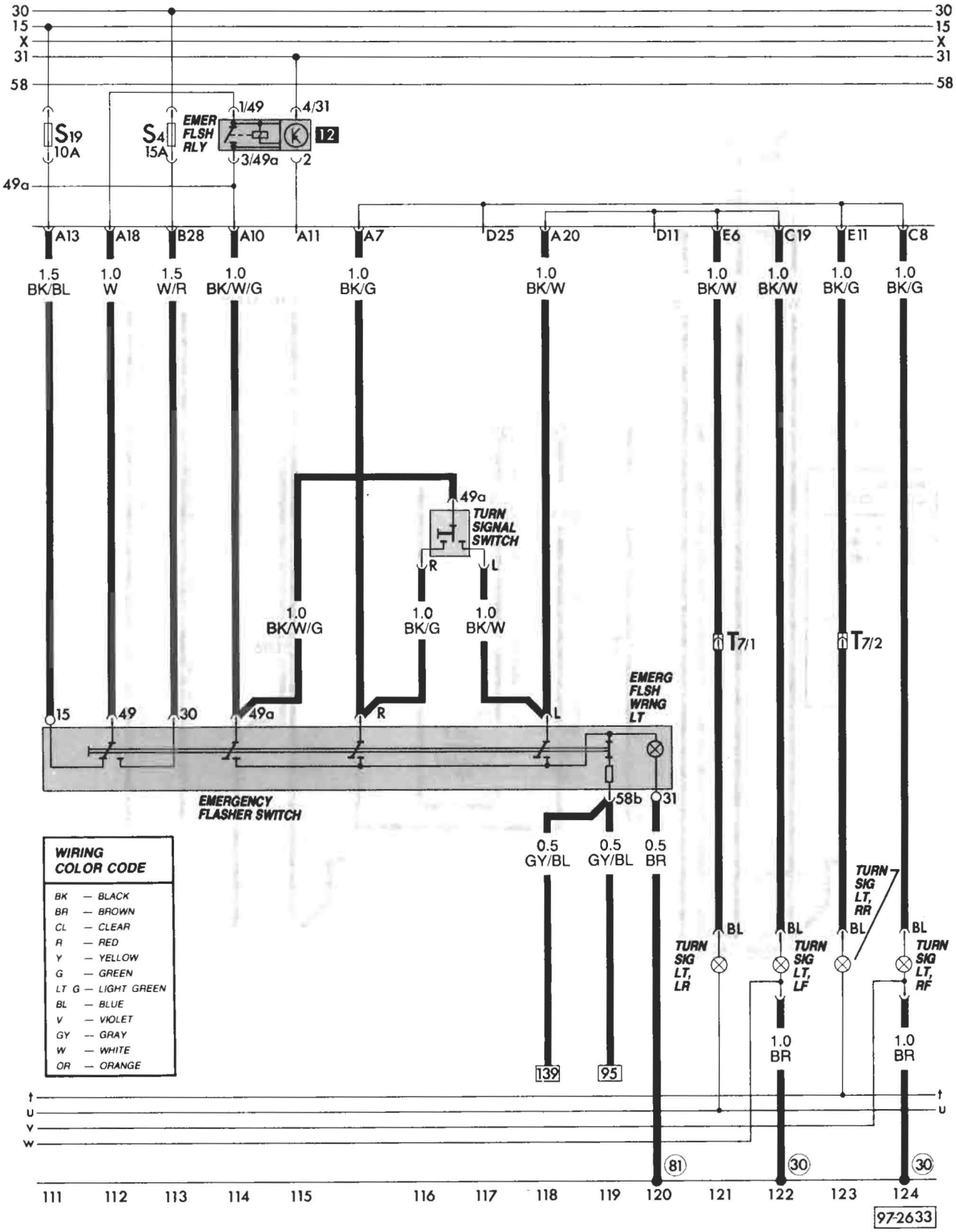

97.113

Main wiring diagram
Emergency flashers
Turn signals

Water-cooled – Digifant 1987

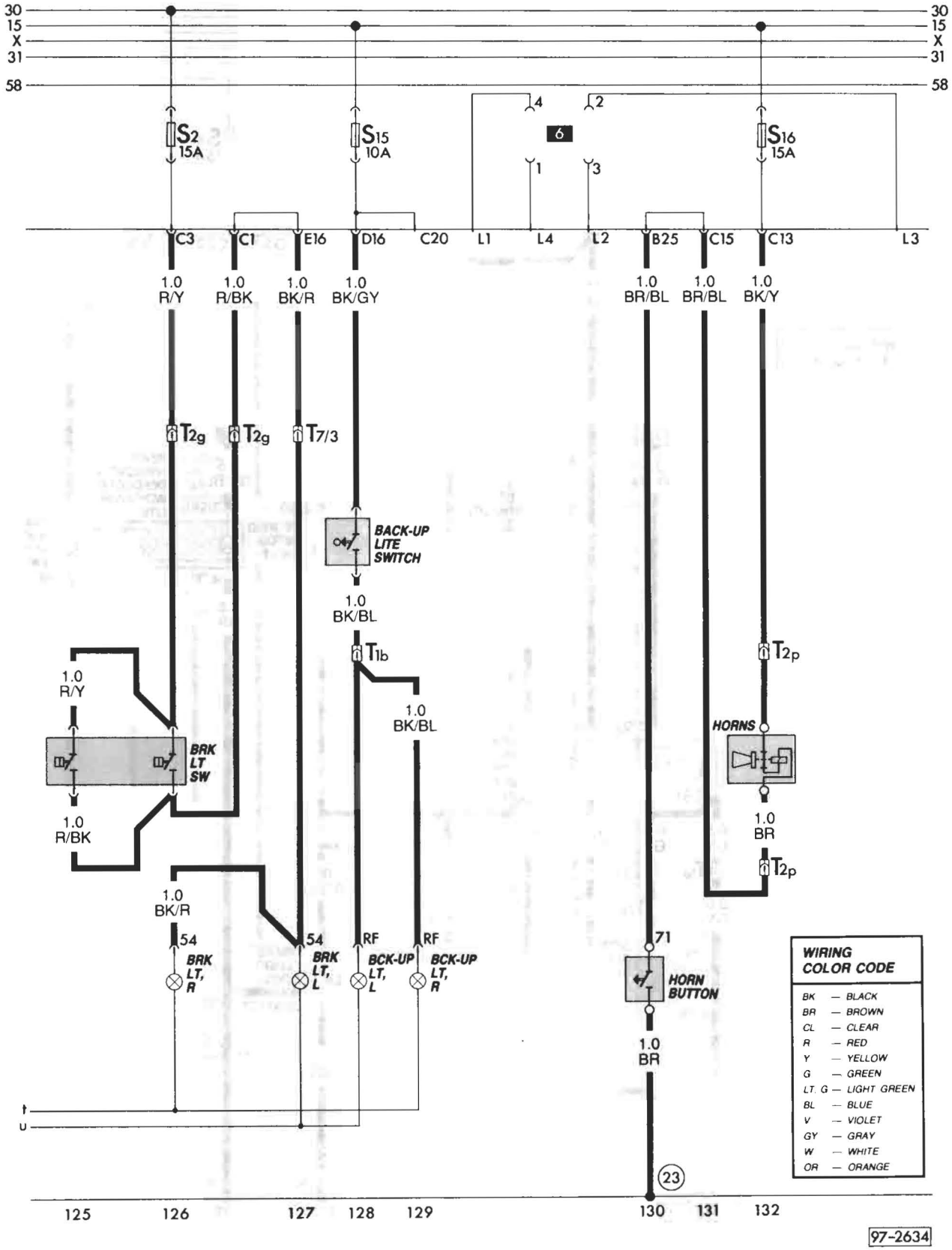

Water-cooled – Digifant 1987

Main wiring diagram
Brake lights
Horns

97.114

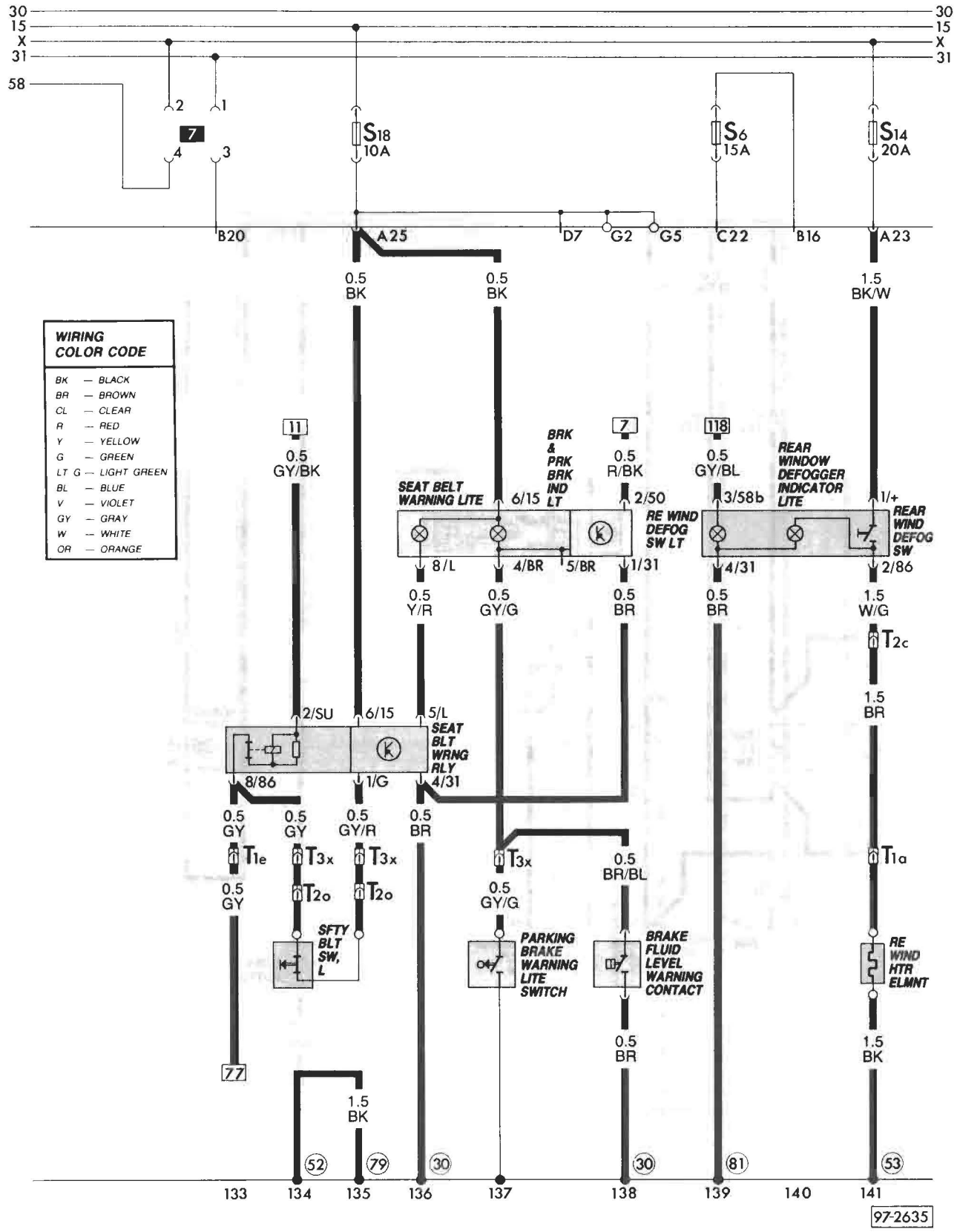
30
15
X
31
58
2
1
7
4
3
S18
10A
S6
15A
S14
20A
B20
A25
D7
G2
G5
C22
B16
A23
0.5
BK
0.5
BK
1.5
BK/W
WIRING
COLOR CODE
BK — BLACK
BR — BROWN
CL — CLEAR
R — RED
Y — YELLOW
G — GREEN
LT G — LIGHT GREEN
BL — BLUE
V — VIOLET
GY — GRAY
W — WHITE
OR — ORANGE
11
0.5
GY/BK
SEAT BELT
WARNING LITE
6/15
BRK
&
PRK
BRK
IND
LT
7
0.5
R/BK
2/50
RE WIND
DEFOG
SW LT
118
0.5
GY/BL
3/58b
REAR
WINDOW
DEFOGGER
INDICATOR
LITE
1/+
REAR
WIND
DEFOG
SW
8/L
4/BR
5/BR
1/31
4/31
2/86
0.5
Y/R
0.5
GY/G
0.5
BR
0.5
BR
1.5
W/G
T2c
1.5
BR
2/SU
6/15
5/L
SEAT
BLT
WRNG
RLY
8/86
1/G
4/31
0.5
GY
0.5
GY
0.5
GY/R
0.5
BR
T1e
T3x
T3x
T3x
T1a
0.5
GY
T2o
T2o
0.5
GY/G
0.5
BR/BL
SFTY
BLT
SW,
L
PARKING
BRAKE
WARNING
LITE
SWITCH
BRAKE
FLUID
LEVEL
WARNING
CONTACT
RE
WIND
HTR
ELMNT
77
0.5
BR
1.5
BK
1.5
BK
52
79
30
30
81
53
133
134
135
136
137
138
139
140
141
97-2635

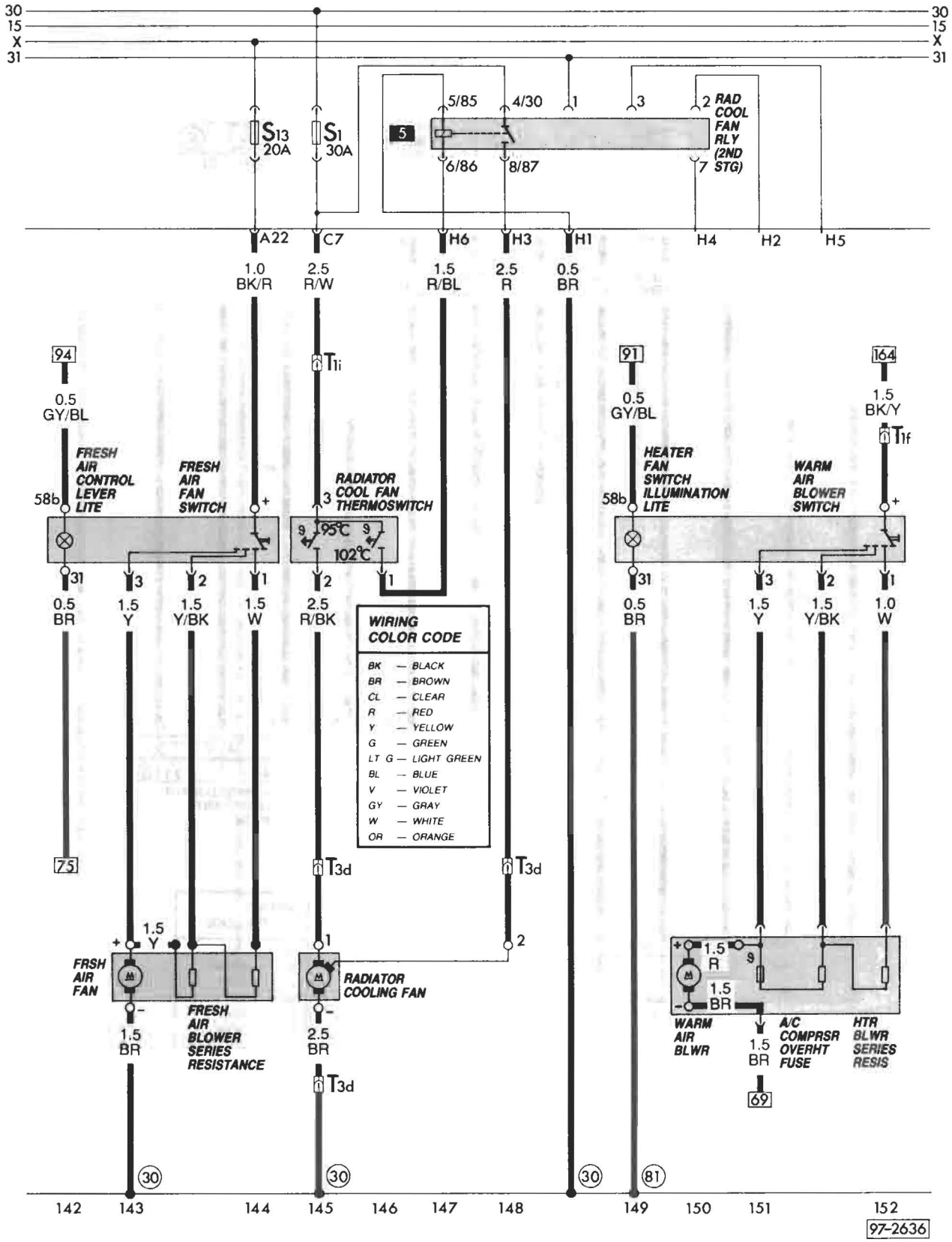

Water-cooled – Digifant 1987

Main wiring diagram
Radiator cooling fan
Fresh air fan

97.116

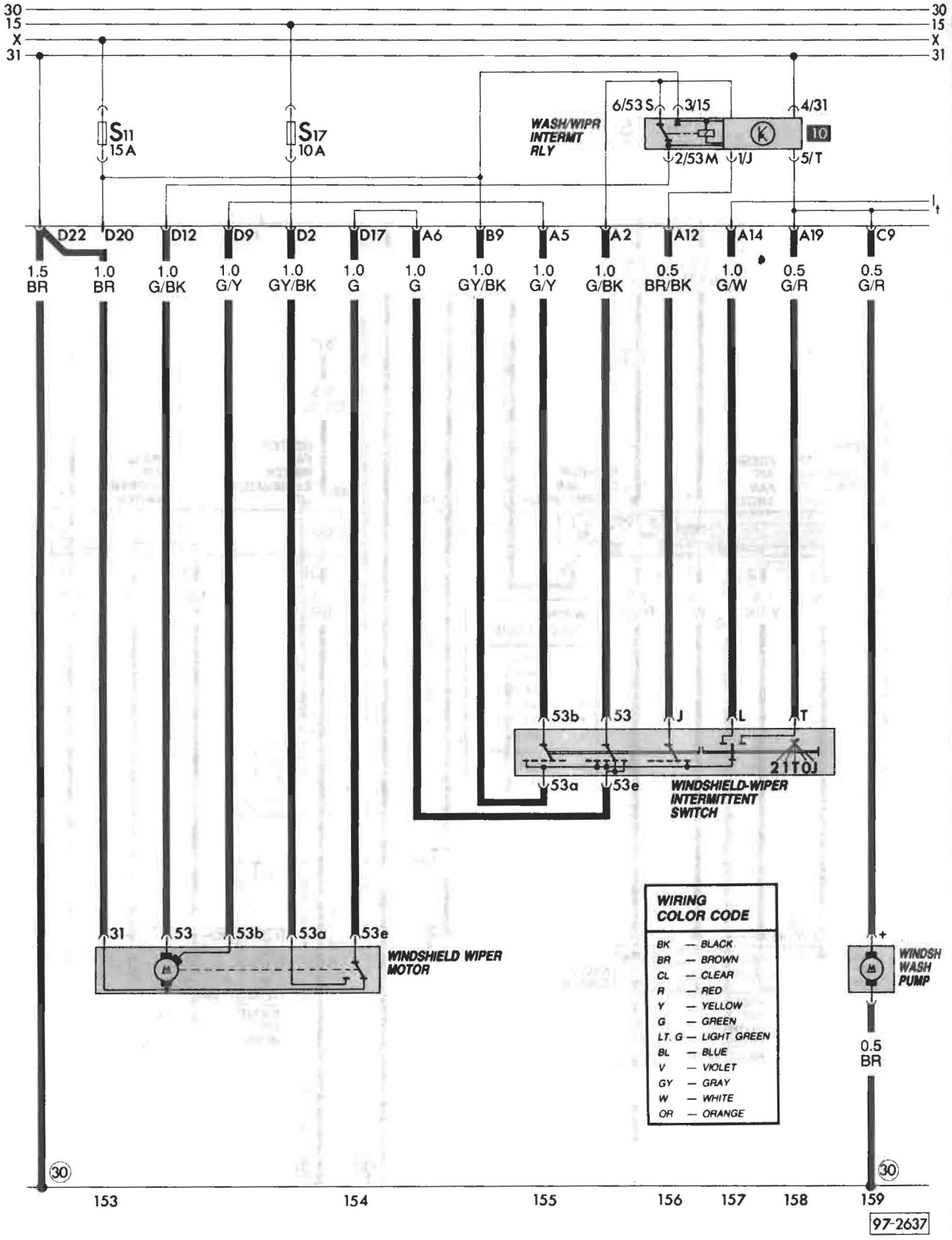
30
15
X
31
S11
15 A
S17
10 A
WASH/WIPR
INTERMT
RLY
6/53 S
3/15
4/31
2/53 M
1/J
5/T
10
D22
D20
D12
D9
D2
D17
A6
B9
A5
A2
A12
A14
A19
C9
1.5 BR
1.0 BR
1.0 G/BK
1.0 G/Y
1.0 GY/BK
1.0 G
1.0 G
1.0 GY/BK
1.0 G/Y
1.0 G/BK
0.5 BR/BK
1.0 G/W
0.5 G/R
0.5 G/R
53b
53
J
L
T
53a
53e
WINDSHIELD-WIPER
INTERMITTENT
SWITCH
31
53
53b
53a
53e
WINDSHIELD WIPER
MOTOR
WIRING
COLOR CODE
BK — BLACK
BR — BROWN
CL — CLEAR
R — RED
Y — YELLOW
G — GREEN
LT. G — LIGHT GREEN
BL — BLUE
V — VIOLET
GY — GRAY
W — WHITE
OR — ORANGE
WINDSH
WASH
PUMP
0.5
BR
30
153
154
155
156
157
158
159
97-2637

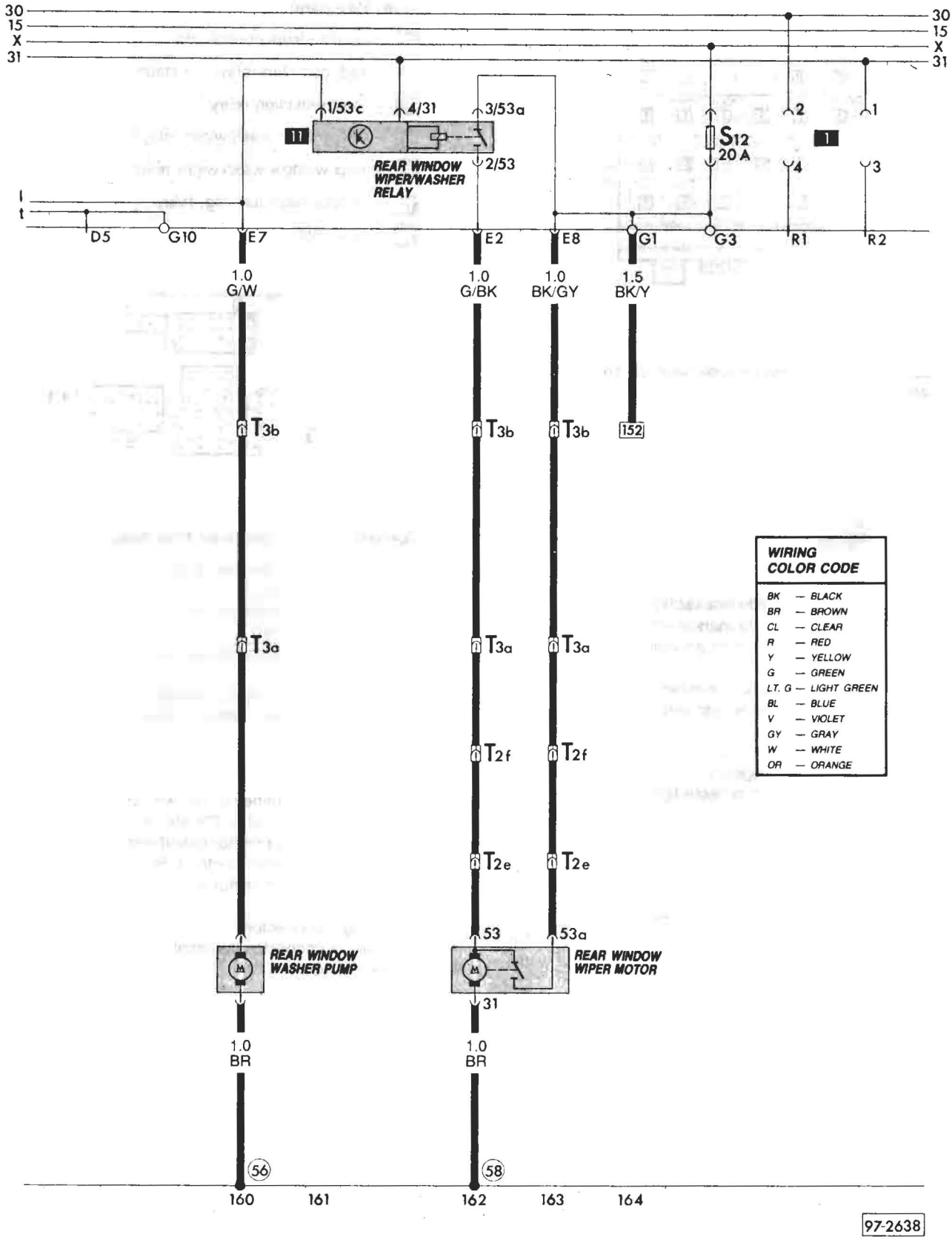
30
15
X
31
1/53c
4/31
3/53a
11
REAR WINDOW WIPER/WASHER RELAY
2/53
S12
20 A
2
1
4
3
D5
G10
E7
E2
E8
G1
G3
R1
R2
1.0 G/W
1.0 G/BK
1.0 BK/GY
1.5 BK/Y
T3b
T3a
T2f
T2e
152
53
53a
REAR WINDOW WASHER PUMP
REAR WINDOW WIPER MOTOR
31
1.0 BR
1.0 BR
56
58
160
161
162
163
164
WIRING COLOR CODE
BK — BLACK
BR — BROWN
CL — CLEAR
R — RED
Y — YELLOW
G — GREEN
LT. G — LIGHT GREEN
BL — BLUE
V — VIOLET
GY — GRAY
W — WHITE
OR — ORANGE
97-2638

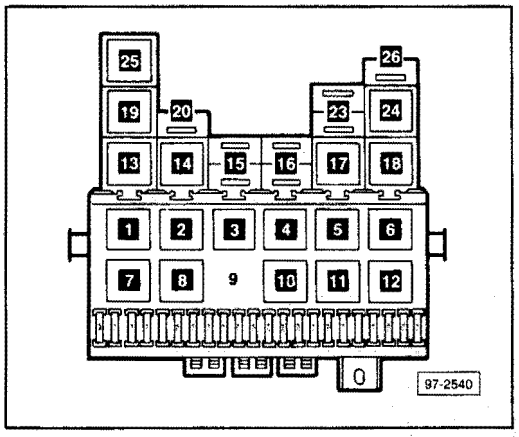

Fuse arrangement

according to numbers on fuse panel as seen from left to right:

		Amp.
1	Radiator fan	30
2	Stop lights	15
3	Cigarette lighter, radio, clock, interior lights, central locking system	10
4	Emergency flasher system	15
5	Not used	
6	Not used	
7	Tail, parking and side marker lights, left	10
8	Tail, parking and side marker lights, right	10
9	High beam right, high beam indicator light	10
10	High beam left	10
11	Windshield, wipers and washer	15
12	Heated seats, outside rear view mirror adjustment	15
13	Fresh air fan	20
14	Rear window defogger	20
15	Back-up lights, shift console light (auto. transmission)	10
16	Horn (single tone)	15
17	Windshield wipers	10
18	Seat belt warning relay, brake and park brake indicator	10
19	Turn signals, brake warning light	10
20	License plate lights	10
21	Low beam left	10
22	Low beam right	10

Fuse/relay panel

3 — coolant level control unit
5 — rad. cool. fan relay, 2nd stage
8 — load reduction relay
10 — intermittent wash/wiper relay
11 — rear window wash/wiper relay
12 — emerg. flash/turn sig. relay
16 — fuse S50

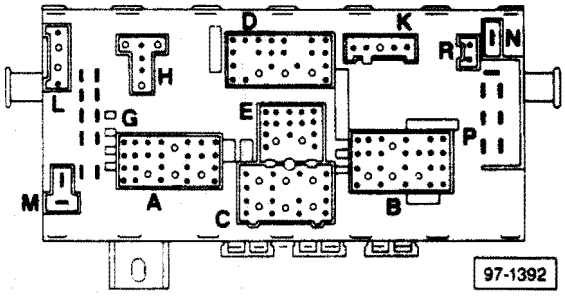

Connections and plugs on fuse/relay panel

A — multi-point connector (blue) for instrument panel wiring harness
B — multi-point connector (red) for instrument panel wiring harness
C — multi-point connector (yellow) for front wiring harness
D — mutli-point connector (white) for windshield wiper and main wiring harness
E — multi-point connector (black) for main wiring harness
G — single connector
H — multi-point connector (brown) to connector for rad. cool. fan relay, 2nd stage
K — multi-point connector (colorless) to radiator coolant low-level control unit
L — multi-point connector (gray) for horns
M — open position
N — single connector
P — single connector (terminal 30)
R — open position

Description	Current track
Air flow sensor potentiometer	22,24
Alternator	5
Alternator warning light	54
Back-up light switch	128
Back-up light, left	128
Back-up light, right	129
Battery	1
Brake and parking brake indicator light	136,137
Brake fluid level warning contact	137
Brake light switch	125,126
Brake light, left	127
Brake light, right	126
Cigarette lighter	74
Cigarette lighter light	75
Clock light	64
Coolant low level control unit	70,71
Coolant low level warning switch	70
Coolant overheat warning light	69
Coolant temperature gauge	68
Coolant temperature sending unit	72
Digifant control unit	16,29
Digifant control unit	16,29
Digifant control unit relay	34-37
Digital clock	56
Door contact switch, left front	81,82
Door contact switch, right front	84
ECS-Malfunction indicator light and switch	20
Emergency flasher relay	114,115
Emergency flasher switch	112,120
Emergency flasher warning light	120
Engine oil pressure control unit	58,59
Engine oil pressure switch (0.3 bar)	52
Engine oil pressure switch (1.8 bar)	50
Engine oil pressure warning light	60
Fresh air blower series resistance	142,143
Fresh air control lever light	141
Fresh air fan	142,143
Fresh air fan switch	141-143
Fuel gauge	67
Fuel gauge sending unit	73
Fuel pump	33
Fuel pump relay	32,33
Hall generator	17,18
Headlight dimmer/flasher switch	104,105
Headlight high beam warning light	66
Headlight, left	99,101
Headlight, right	109,111
Heater blower	149
Heater blower switch	148-152
Heater blower series resistance	150-152
Heater fan switch illumination light	148
Heating element (crankcase ventilation)	12
High-beam headlight, left	100
High-beam headlight, right	110
Horn button	130
Horns	131
Idle speed stabilizer valve	43,44
Idle stabilizer control unit	39-45
Ignition coil	13,15
Ignition distributor	13,15
Ignition/starter switch	8-11
Injector, cyl. 1	29
Injector, cyl. 2	30
Injector, cyl. 3	31
Injector, cyl. 4	32
Instrument panel light	61-63
Instrument panel light dimmer switch	96
Interior light, front	81,82
License plate light	97-98
Light switch	88-96
Load reduction relay	89-91
Make-up mirror light	80
Map/reading light, right front	78
OXS Elapsed mileage counter	48,49
OXS elapsed mileage indicator	55
Oxygen sensor	27,28
Parking brake warning light switch	136
Parking light, left	102
Parking light, right	108
Power steering pressure switch	39,40
Radiator cooling fan	144
Radiator cooling fan relay (2nd stage)	146-149
Radiator cooling fan thermoswitch	144,145
Radio connection	76-79
Reading light, driver's seat	83
Reading light, left rear	85,86
Rear window defogger indicator light	139
Rear window defogger switch	140
Rear window defogger switch light	138
Rear window heater element	140
Rear window washer pump	160
Rear window wiper motor	162,163
Rear window wiper/washer relay	161,162
Safety belt switch, left	133
Seat belt warning light	135
Seat belt warning relay	132-135
Side marker lights, rear	105,106
Spark plug connectors	13,15
Spark plugs	13,15
Starter	3,4
T.D.C. sensor	46,47
Tachometer	57
Tail light, left	103
Tail light, right	107
Temperature sensor II	21
Throttle valve switch (enrichment)	20
Turn signal indicator light	65
Turn signal light, left front	122
Turn signal light, left rear	121
Turn signal light, right front	124
Turn signal light, right rear	123
Turn signal switch	116,117
Voltage regulator	5
Voltage stabilizer	67
Washer/wiper intermittent relay	156-158
Windshield washer pump	159
Windshield wiper motor	153,154
Windshield-wiper intermittent switch	155-158

Wire connectors

T1 — single, under instrument panel, left side
T1a — single, above left rear window
T1d — single, in wire distributor box, engine compartment
T1e — single, under instrument panel, left side
T1g — single, in wire distributor box, engine compartment
T1h — single, engine compartment, left side
T1i — single, under instrument panel
T1k — single, engine compartment, left
T1m — single, near relay panel, engine compartment
T1n — single, near relay panel, engine compartment
T1o — single, under instrument panel, left side
T2c — double, under instrument panel, left side
T2d — double, upper right 'A' pillar
T2e — double, in rear deck lid
T2f — double, behind left 'C' pillar cover
T2g — double, under instrument panel
T2i — double, in wire distributor box, engine compartment
T2k — double, in engine compartment, left
T2m — double, near relay panel, engine compartment
T2o — double, under driver's seat
T2x — double, in engine compartment, middle
T3 — three-point, near alternator
T3a — three-point, behind instrument panel, right side
T3b — three-point, behind instrument panel, left side
T3c — three-point, near instrument cluster
T3d — three-point, behind front grille
T3x — three-point, under instrument panel
T7 — seven-point, in wire distributor box, engine compartment
T7a — seven-point, in wire distributor box, engine compartment
T8 — eight-point, under instrument panel, middle
T14 — fourteen-point, on instrument cluster

Ground connections

(1) — battery to body
(2) — transmission to body
(12) — in engine compartment, left
(18) — on engine block
(23) — ground wire, above steering gear
(29) — near Digifant control unit
(30) — near relay panel
(45) — under instrument panel, middle
(52) — in rear decklid, left
(53) — in rear decklid, right
(56) — near rear washer bottle holder
(58) — near rear window wiper motor

Welded wiring connections

(81) — ground connection, instrument panel wiring harness
(94) — ground connection, in Digifant wiring harness
(A4) — plus (+), terminal 58, instrument panel wiring harness
(G1) — plus (+), in Digifant wiring harness
(G2) — in Digifant wiring harness
(P1) — plus (+) 30 terminal, in wire distributor box, engine compartment

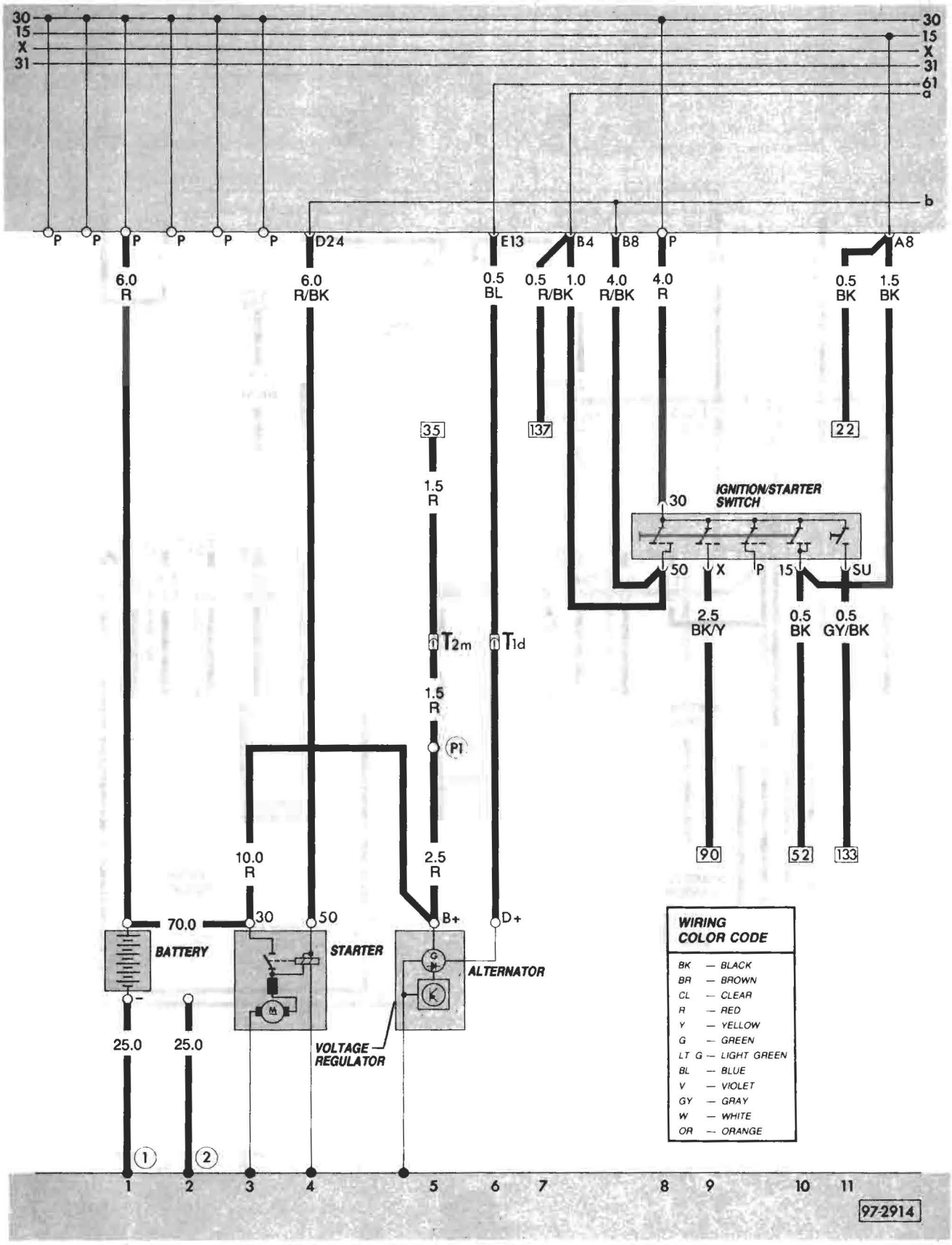

WIRING COLOR CODE

BK	— BLACK
BR	— BROWN
CL	— CLEAR
R	— RED
Y	— YELLOW
G	— GREEN
LT G	— LIGHT GREEN
BL	— BLUE
V	— VIOLET
GY	— GRAY
W	— WHITE
OR	— ORANGE

Water-cooled – Digifant 1988, 1989

Main wiring diagram
Alternator/Starter/
Ignition Switch

97.122

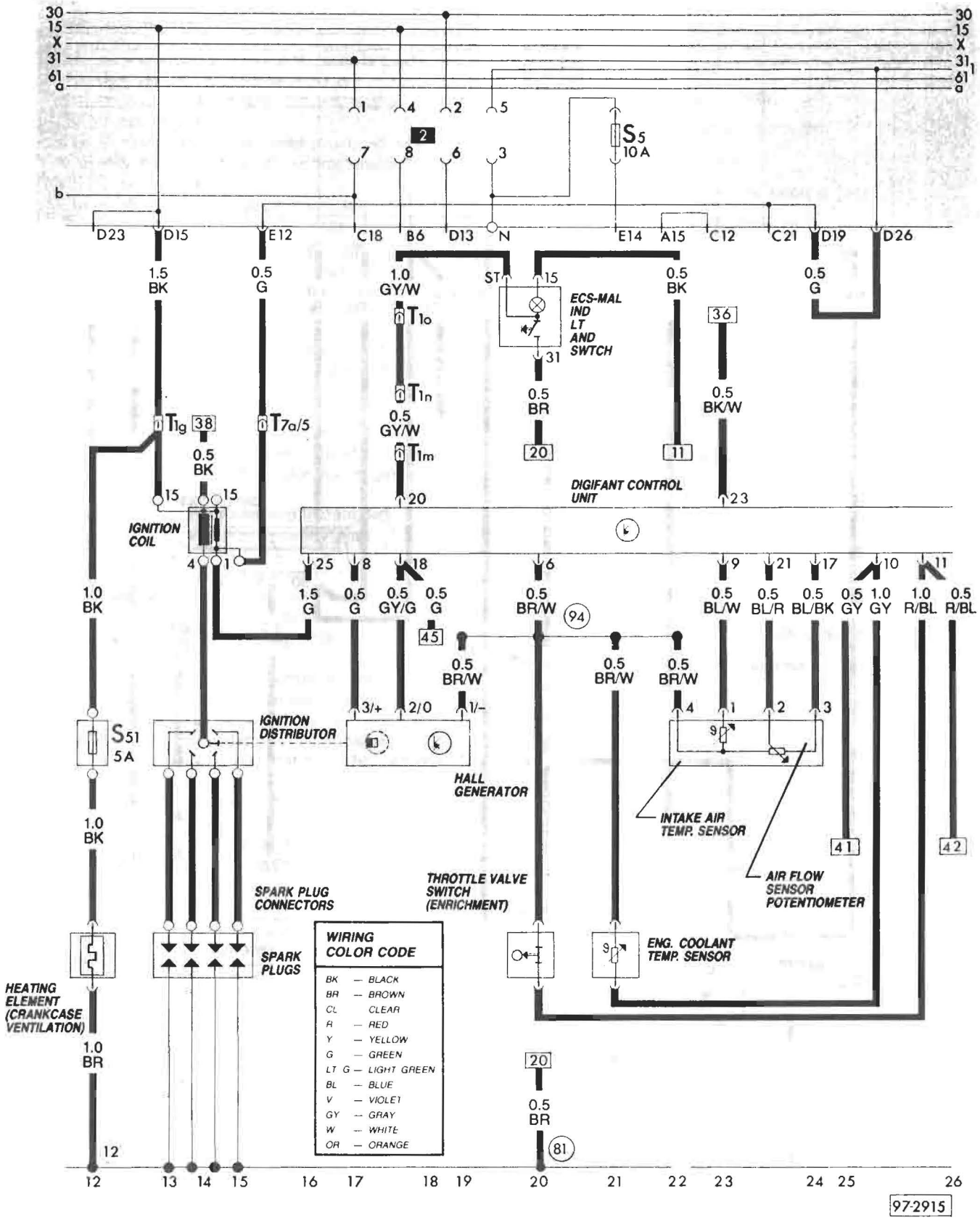

97.123 Main wiring diagram
Ignition system
Digifant system

Water-cooled—Digifant 1988, 1989

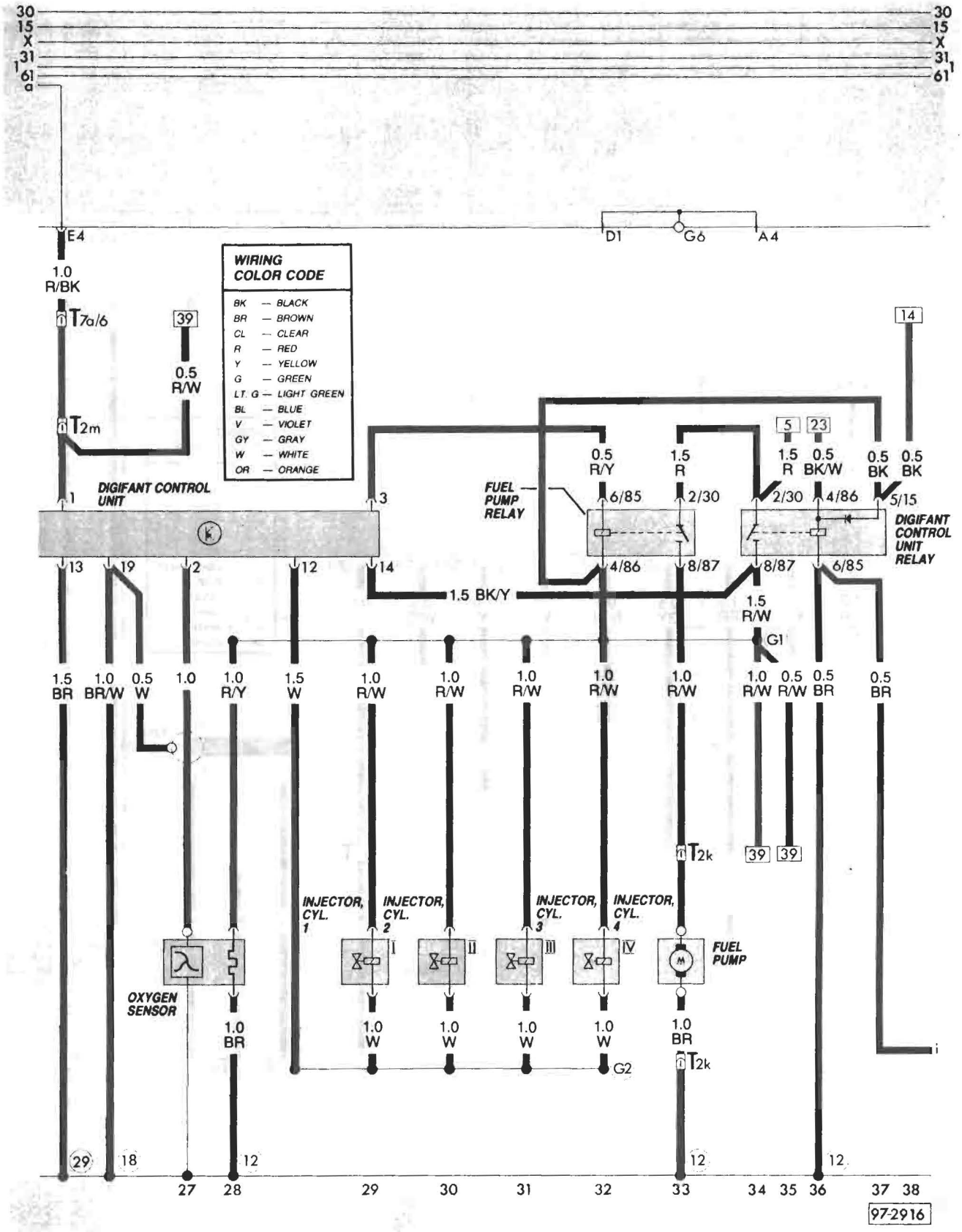

Water-cooled – Digifant 1988, 1989

Main wiring diagram Digifant power supply, fuel injectors

97.124

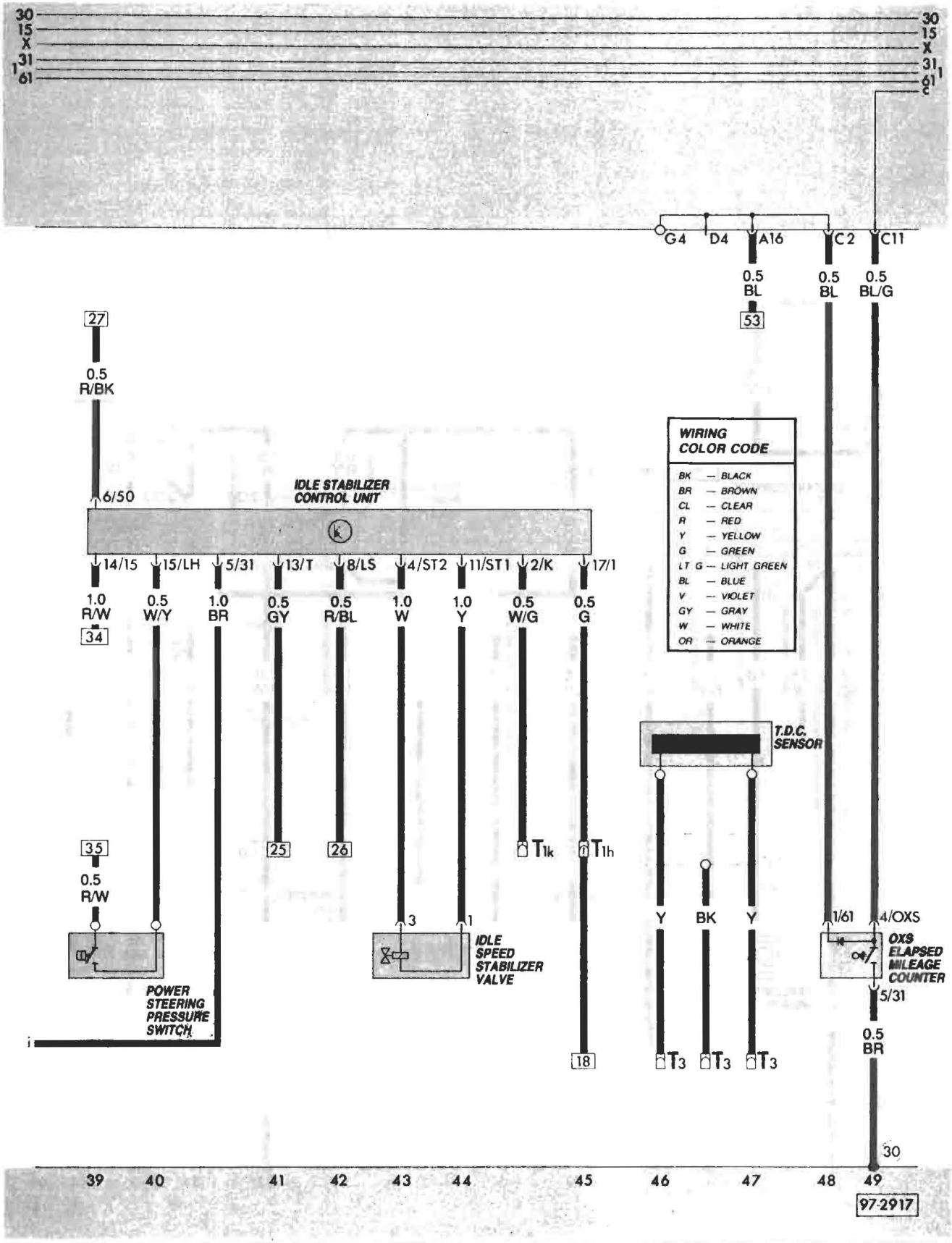

97.125 Main wiring diagram Idle stabilizer control

Water-cooled – Digifant 1988, 1989

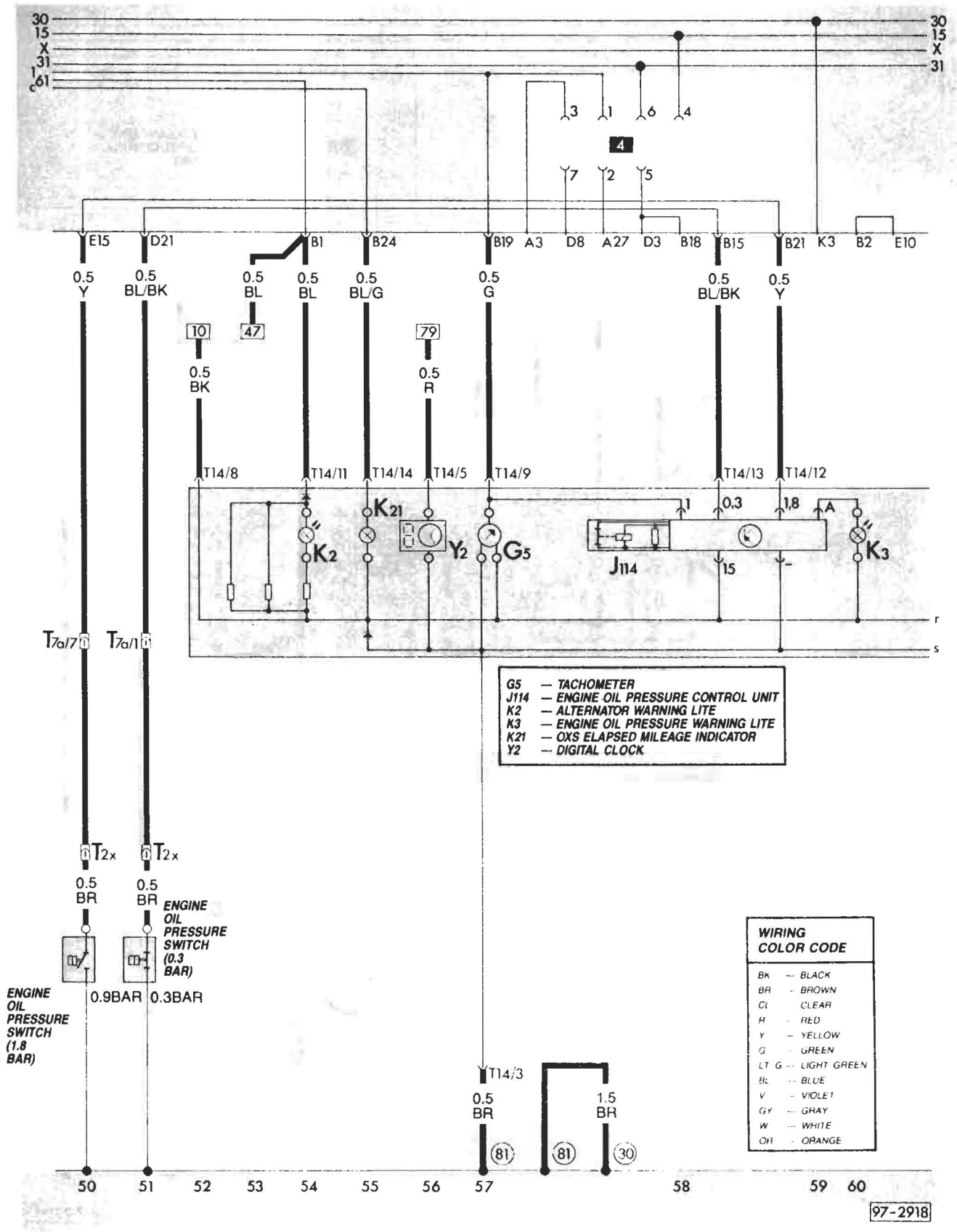

Water-cooled – Digifant 1988, 1989

Main wiring diagram
Oil pressure switches
Instrument cluster

97.126

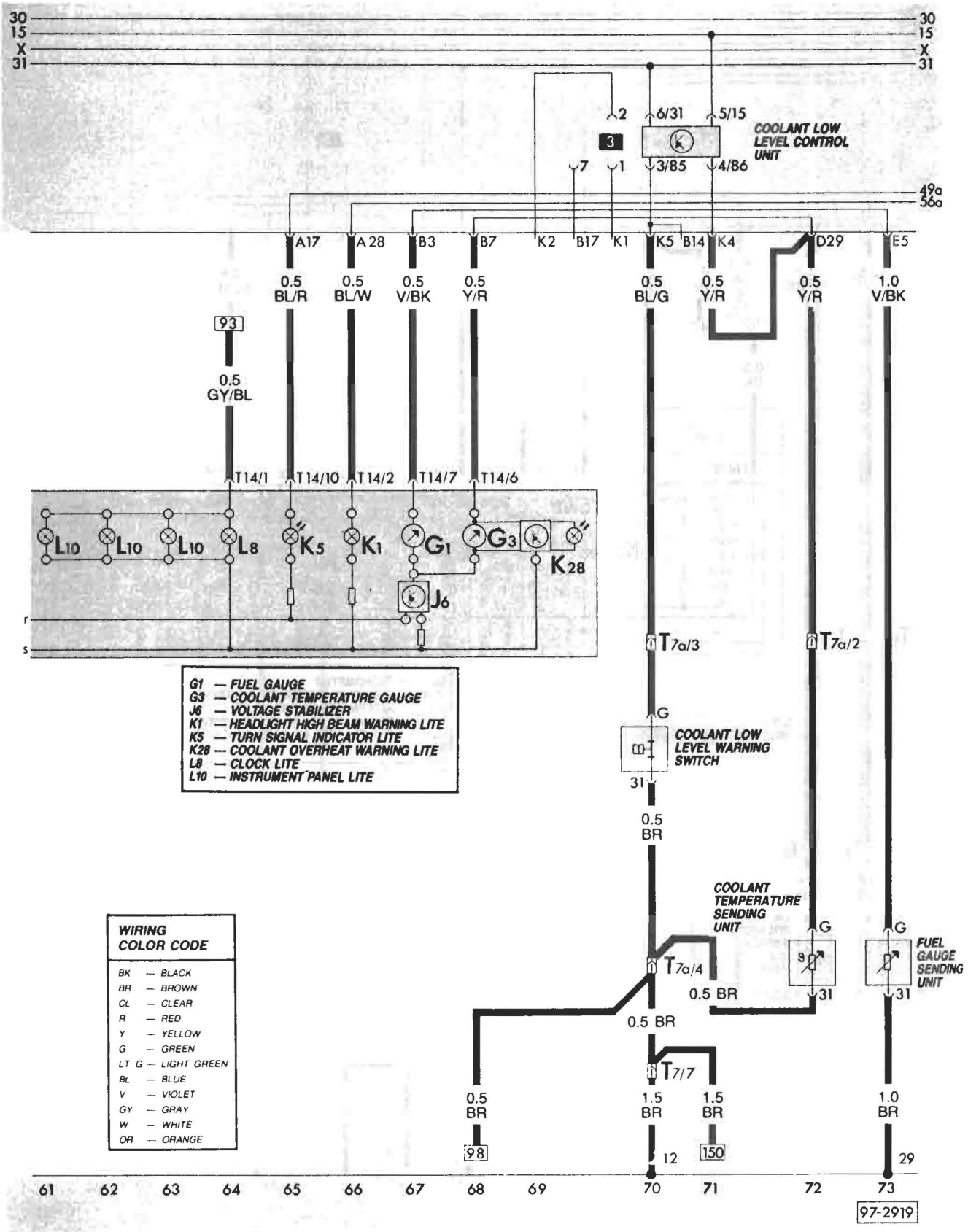

97.127 Main wiring diagram Instrument cluster

Water-cooled – Digifant 1988, 1989

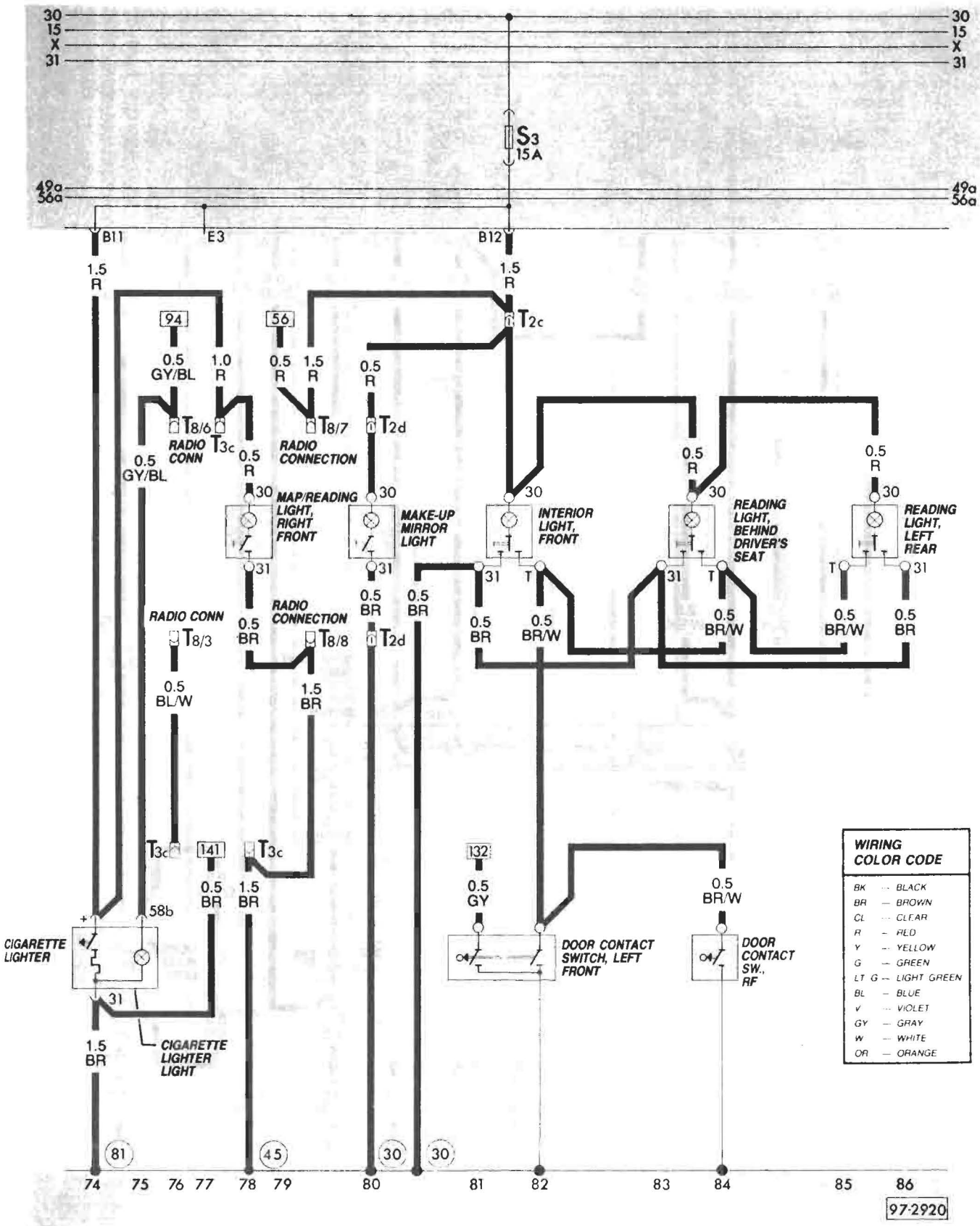

Water-cooled – Digifant 1988, 1989

Main wiring diagram
Interior lights

97.128

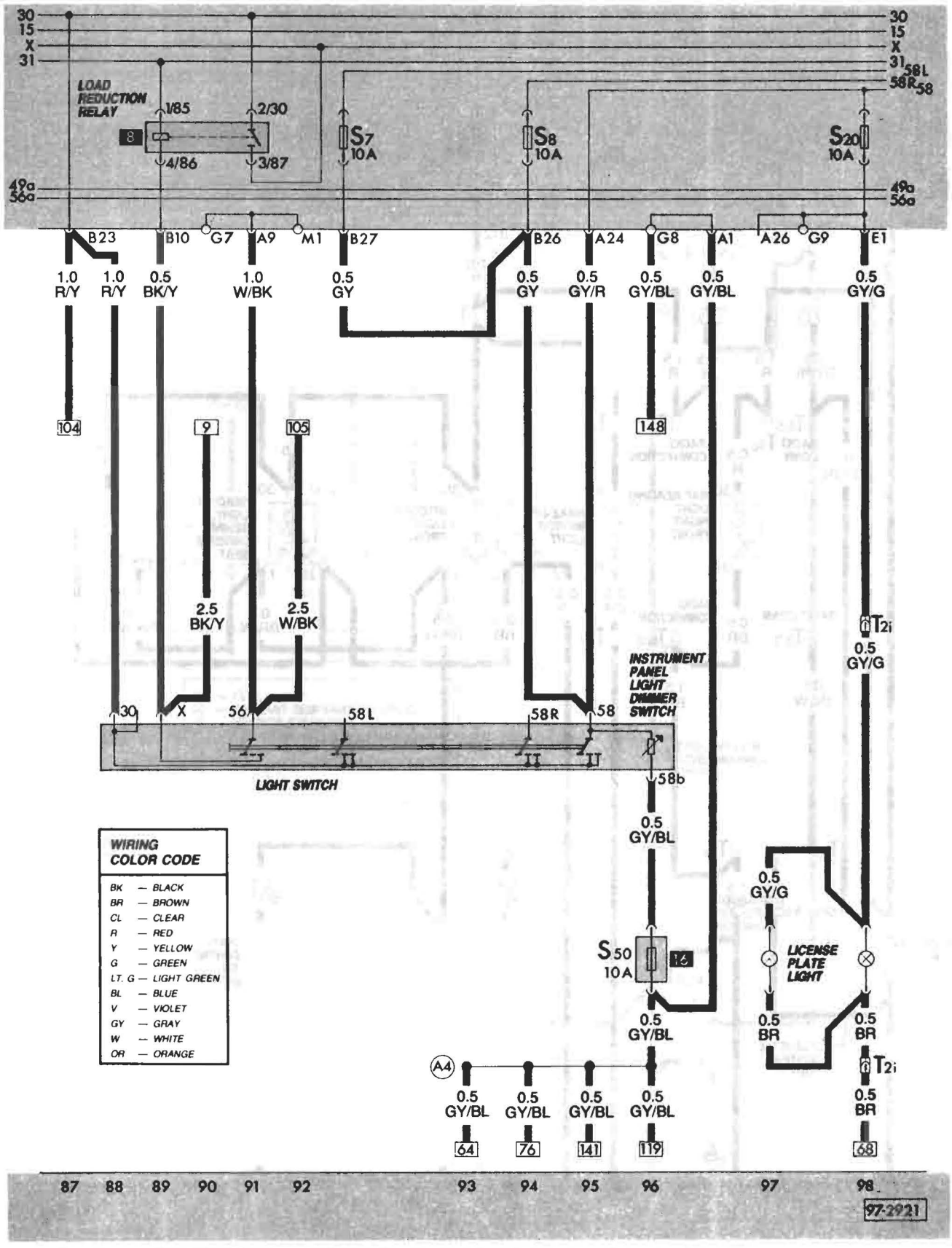

97.129 Main wiring diagram Load reduction relay, light switch

Water-cooled – Digifant 1988, 1989

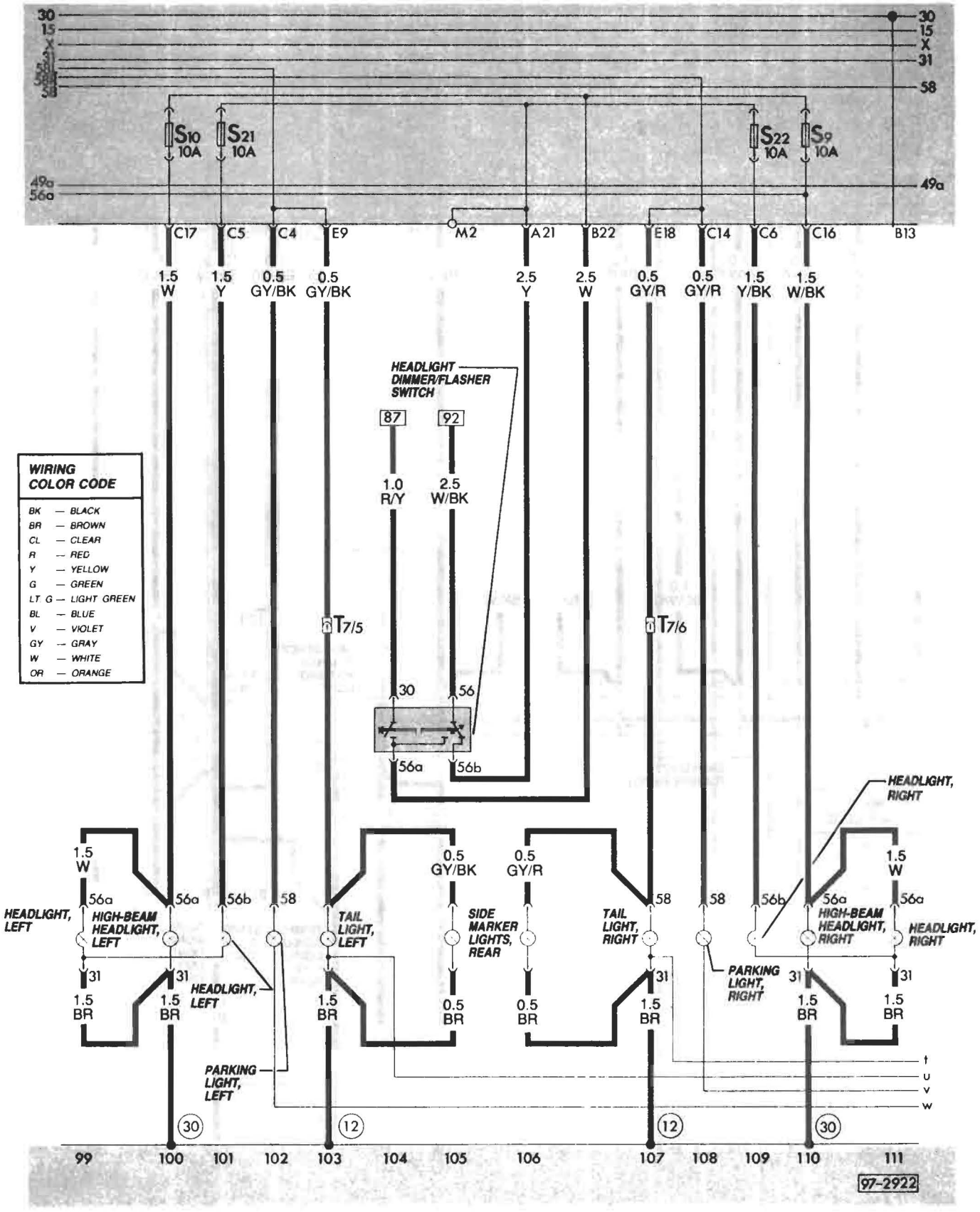
30
15
X
31
58
49a
56a
S10 10A
S21 10A
S22 10A
S9 10A
C17
C5
C4
E9
M2
A21
B22
E18
C14
C6
C16
B13
1.5 W
1.5 Y
0.5 GY/BK
0.5 GY/BK
2.5 Y
2.5 W
0.5 GY/R
0.5 GY/R
1.5 Y/BK
1.5 W/BK
HEADLIGHT DIMMER/FLASHER SWITCH
87
92
1.0 R/Y
2.5 W/BK
T7/5
T7/6
30
56
56a
56b
WIRING COLOR CODE
BK — BLACK
BR — BROWN
CL — CLEAR
R — RED
Y — YELLOW
G — GREEN
LT G — LIGHT GREEN
BL — BLUE
V — VIOLET
GY — GRAY
W — WHITE
OR — ORANGE
HEADLIGHT, LEFT
HIGH-BEAM HEADLIGHT, LEFT
HEADLIGHT, LEFT
PARKING LIGHT, LEFT
TAIL LIGHT, LEFT
SIDE MARKER LIGHTS, REAR
TAIL LIGHT, RIGHT
PARKING LIGHT, RIGHT
HIGH-BEAM HEADLIGHT, RIGHT
HEADLIGHT, RIGHT
HEADLIGHT, RIGHT
1.5 BR
0.5 BR
t
u
v
w
30
12
12
30
99
100
101
102
103
104
105
106
107
108
109
110
111
97-2922

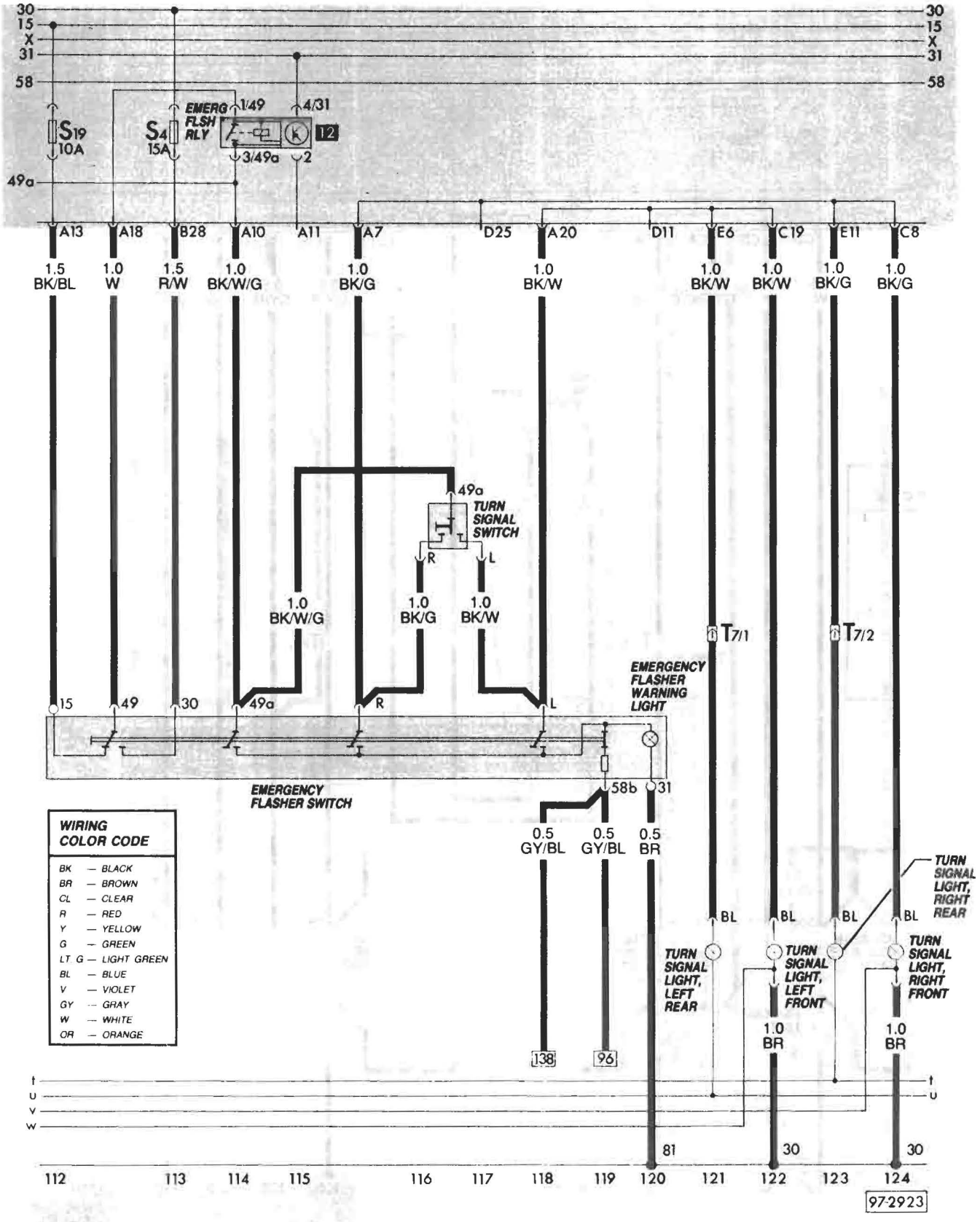

97.131 Main wiring diagram Emergency flashers, turn signals

Water-cooled – Digifant 1988, 1989

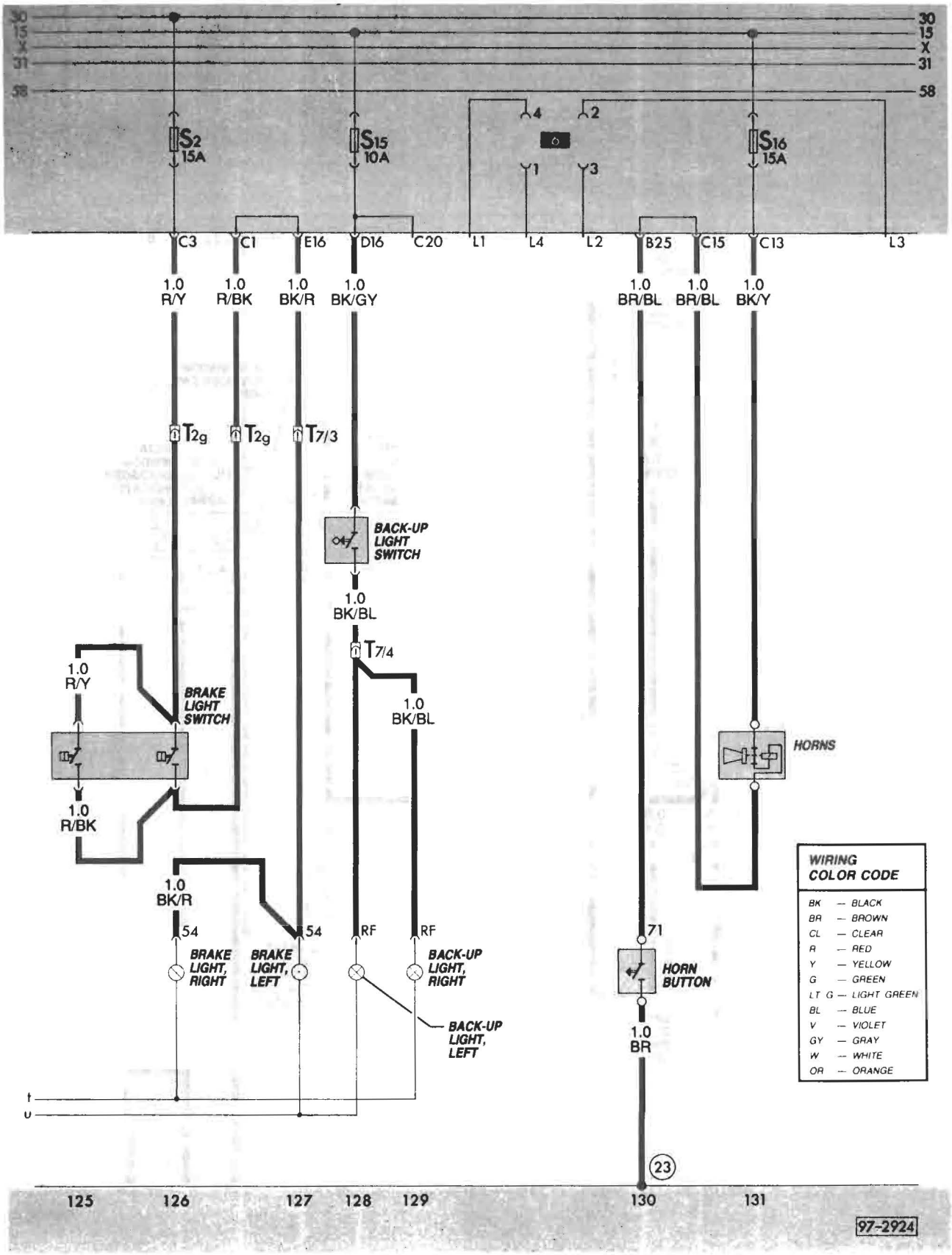

Water-cooled – Digifant 1988, 1989

Main wiring diagram
Brake lights, horns

97.132

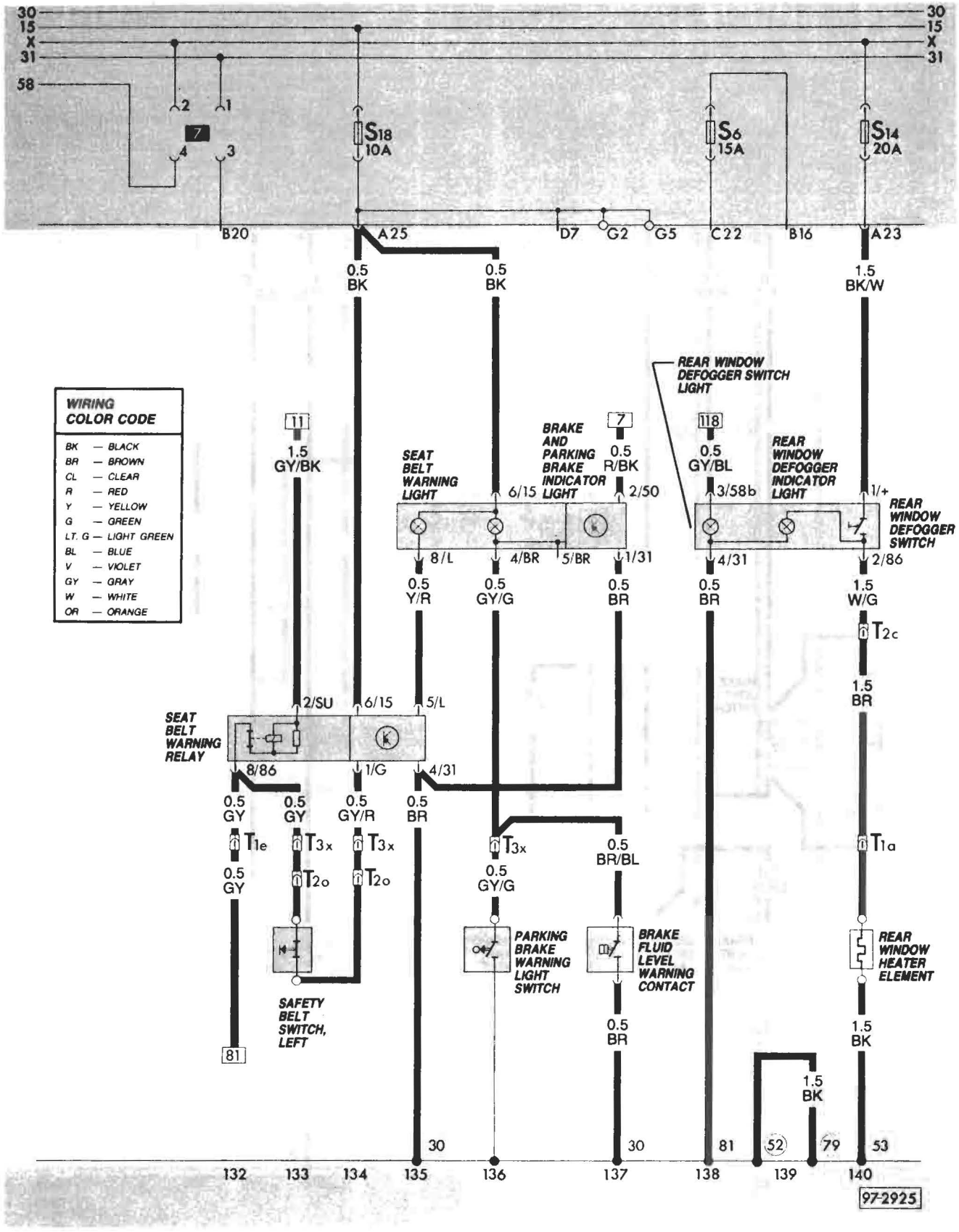

97.133 Main wiring diagram Seat belt system, rear defogger

Water-cooled – Digifant 1988, 1989

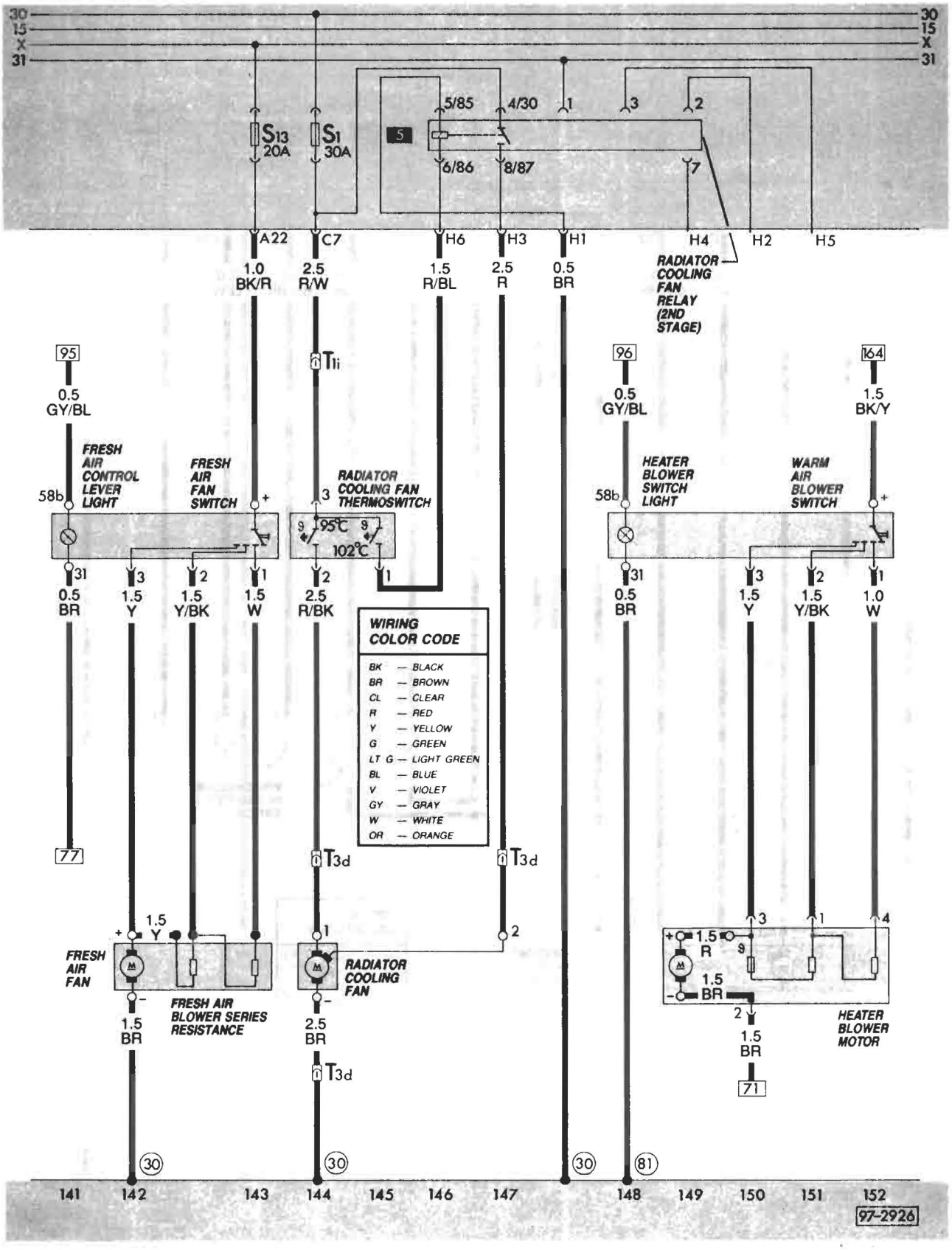

Water-cooled – Digifant 1988, 1989

Main wiring diagram
Radiator cooling fan, fresh air fan

97.134

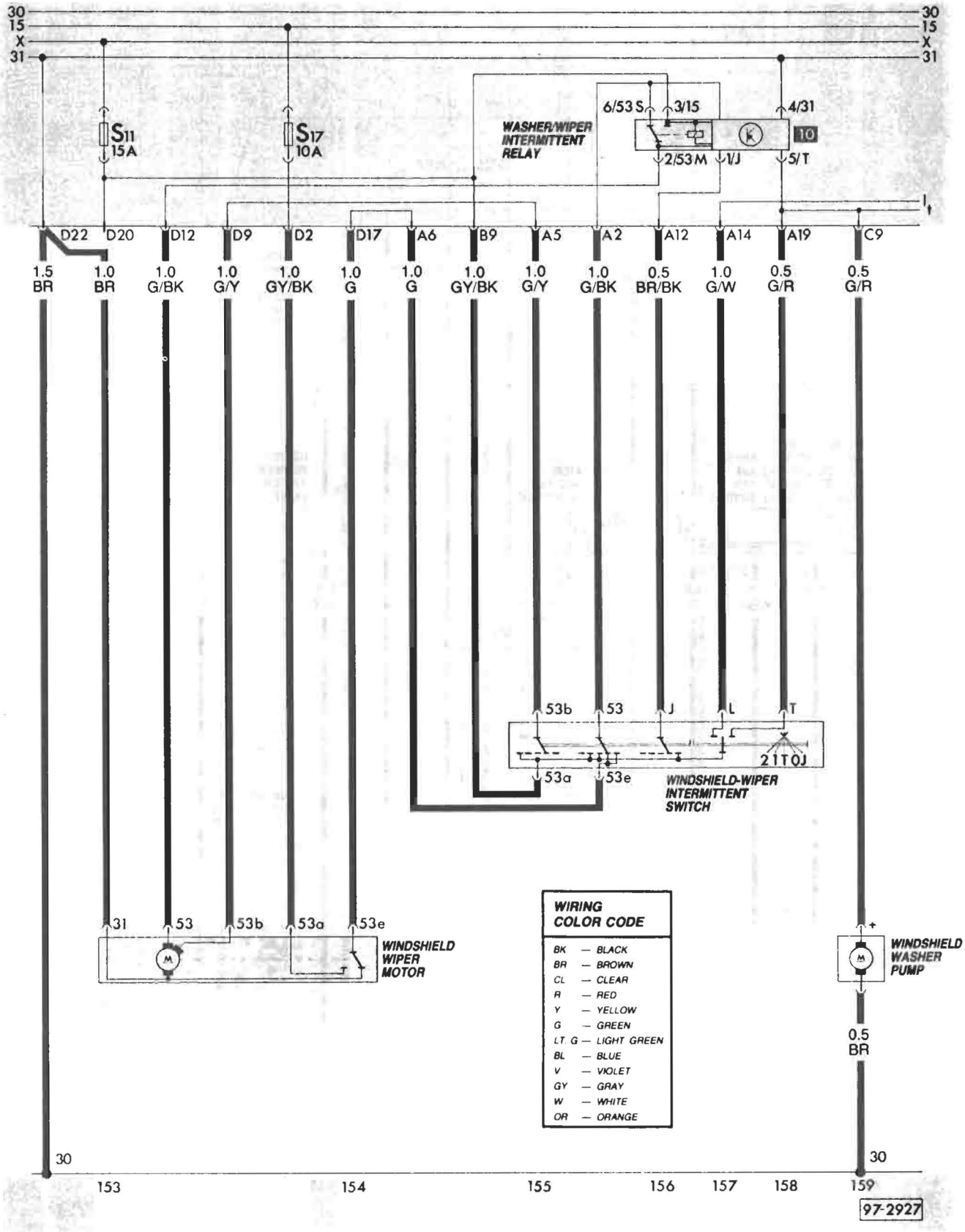
30
15
X
31
S11
15A
S17
10A
WASHER/WIPER
INTERMITTENT
RELAY
6/53S
3/15
4/31
10
2/53M
1/J
5/T
D22
D20
D12
D9
D2
D17
A6
B9
A5
A2
A12
A14
A19
C9
1.5 BR
1.0 BR
1.0 G/BK
1.0 G/Y
1.0 GY/BK
1.0 G
1.0 G
1.0 GY/BK
1.0 G/Y
1.0 G/BK
0.5 BR/BK
1.0 G/W
0.5 G/R
0.5 G/R
53b
53
J
L
T
21TOJ
53a
53e
WINDSHIELD-WIPER
INTERMITTENT
SWITCH
31
53
53b
53a
53e
WINDSHIELD
WIPER
MOTOR
WIRING
COLOR CODE
BK — BLACK
BR — BROWN
CL — CLEAR
R — RED
Y — YELLOW
G — GREEN
LT. G — LIGHT GREEN
BL — BLUE
V — VIOLET
GY — GRAY
W — WHITE
OR — ORANGE
WINDSHIELD
WASHER
PUMP
0.5
BR
30
30
153
154
155
156
157
158
159
97-2927

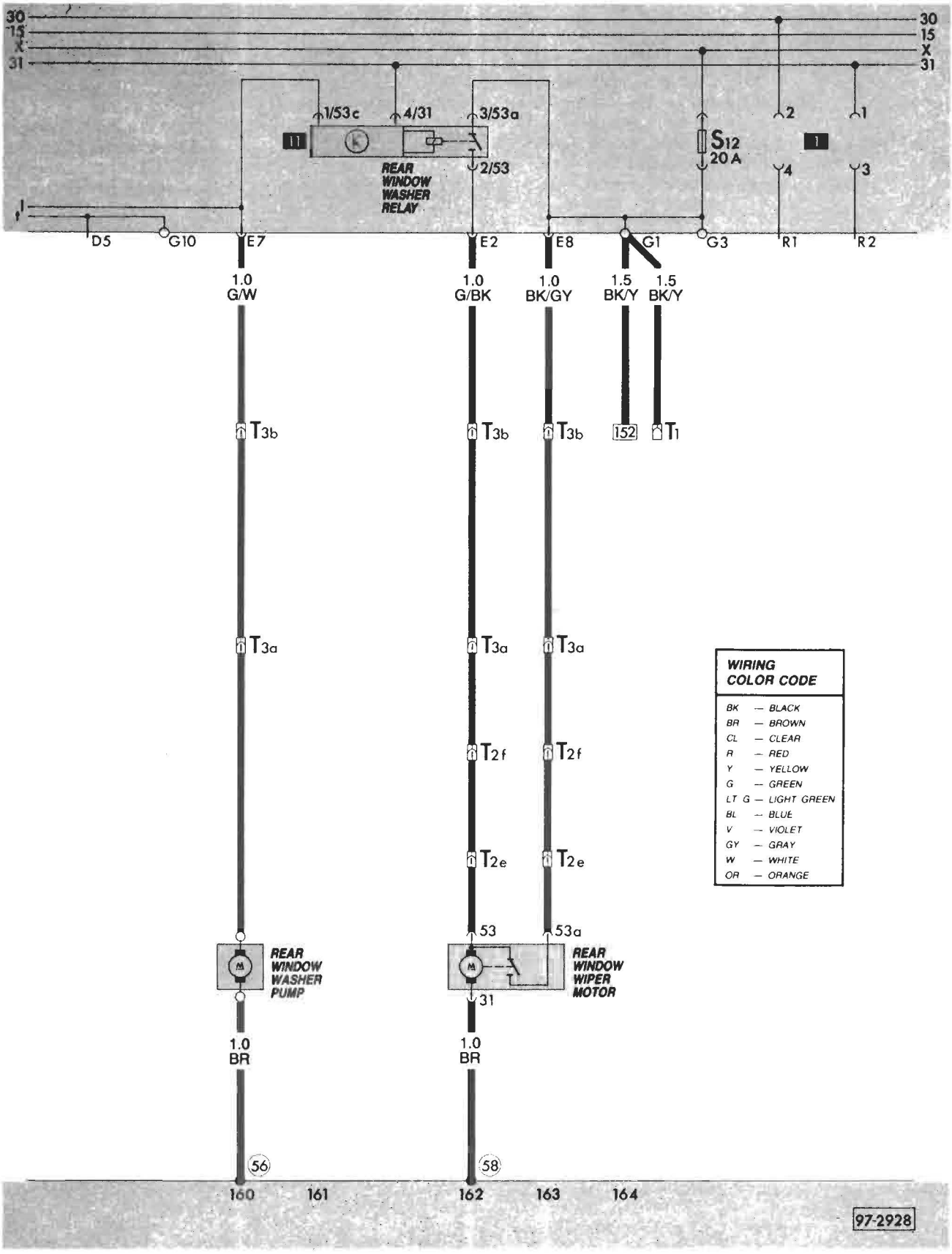
30
15
X
31
1/53c
4/31
3/53a
2/53
REAR WINDOW WASHER RELAY
S12
20 A
2
1
4
3
D5
G10
E7
E2
E8
G1
G3
R1
R2
1.0 G/W
1.0 G/BK
1.0 BK/GY
1.5 BK/Y
1.5 BK/Y
T3b
T3a
T2f
T2e
152
T1
53
53a
31
REAR WINDOW WASHER PUMP
REAR WINDOW WIPER MOTOR
1.0 BR
1.0 BR
56
58
160
161
162
163
164
97-2928
WIRING COLOR CODE
BK — BLACK
BR — BROWN
CL — CLEAR
R — RED
Y — YELLOW
G — GREEN
LT G — LIGHT GREEN
BL — BLUE
V — VIOLET
GY — GRAY
W — WHITE
OR — ORANGE

Description	Current Track
A/C compressor clutch	14
A/C compressor cut-out relay	12-13
A/C thermostat	13
Evaporator fan	18
Evaporator fan range switch	16, 17
Evaporator fan relay	3
Evaporator fan switch	13-15
Idle speed stabilizer valve	13
Rad./condensor cool. fan relay	9, 10
Rad. cooling fan	2
Rad. cool. fan relay	1-3
Rad. cool. fan thermoswitch	3, 4

Connectors

T1 — single, behind left 'B' pillar cover
T1a — single, eng. comp., left
T1b — single, eng. comp., left
T2 — double, in evaporator housing
T2a — double, in air tunnel
T2b — double, in air tunnel
T2c — double, behind left 'B' pillar cover
T2d — double, above fuse panel

Ground Connections

(1) — near fuse panel
(2) — in engine compartment
(3) — in evaporator housing (near left side)

Go to next page

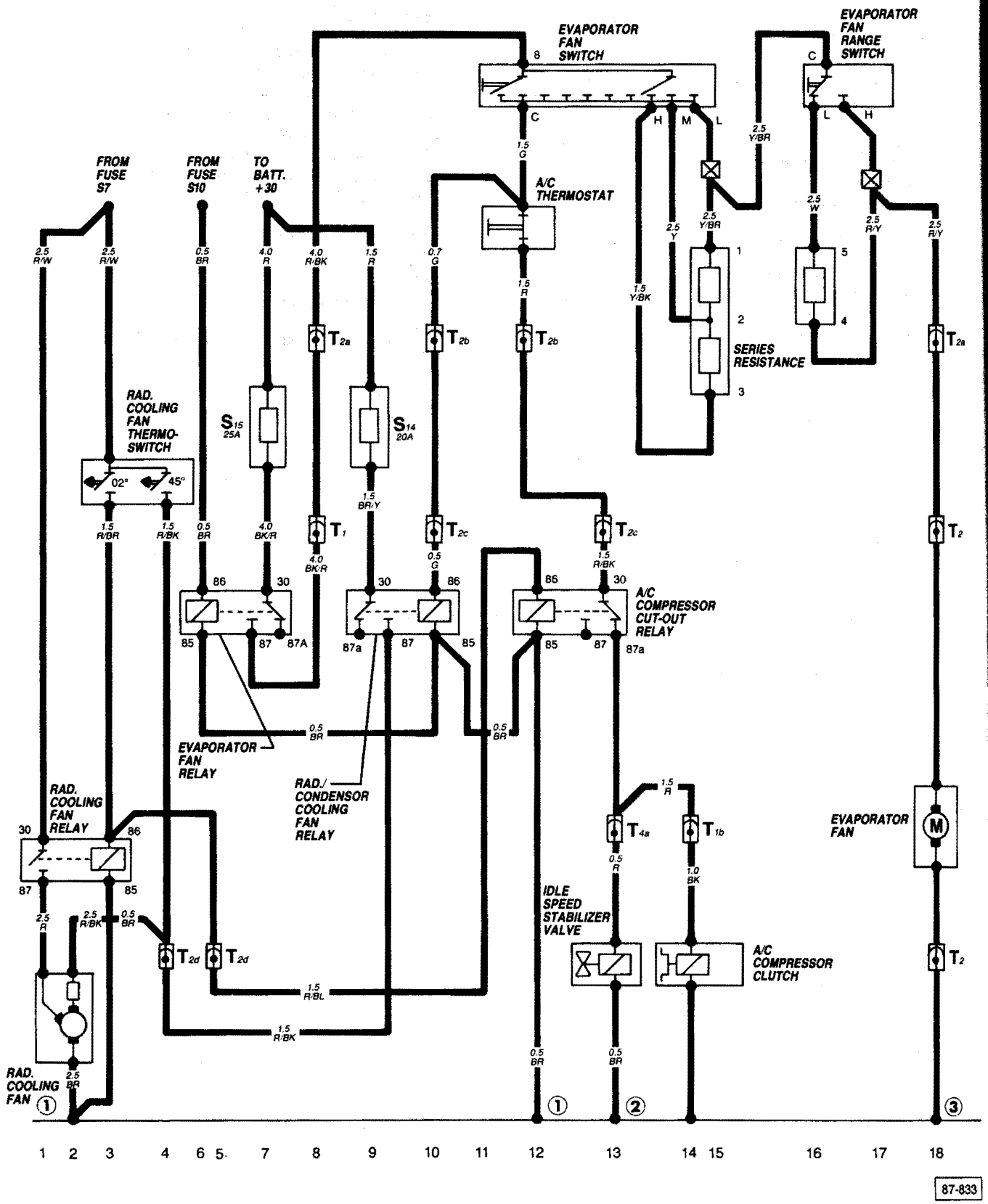
EVAPORATOR FAN SWITCH
EVAPORATOR FAN RANGE SWITCH
FROM FUSE S7
FROM FUSE S10
TO BATT. +30
A/C THERMOSTAT
SERIES RESISTANCE
RAD. COOLING FAN THERMO-SWITCH
02°
45°
S15 25A
S14 20A
T1
T2a
T2b
T2c
T2d
T4a
T1b
T2
A/C COMPRESSOR CUT-OUT RELAY
EVAPORATOR FAN RELAY
RAD./ CONDENSOR COOLING FAN RELAY
RAD. COOLING FAN RELAY
IDLE SPEED STABILIZER VALVE
A/C COMPRESSOR CLUTCH
EVAPORATOR FAN
M
RAD. COOLING FAN
87-833

Description	Current Track
A/C compress. clutch	15
A/C compress. clutch relay	15-17
A/C refrig. high press. sw.	14
A/C refrig. low press. sw.	15
A/C switch	1-3
A/C thermostat	1-3
Ambient air temp. sw.	15
Evap. fan	7-8
Evap. fan sw.	6-8
Evap. fan relay	5-6
Evap. series resistance	7-8
Rad. cool fan	20
Rad. cool fan relay 2nd stage	21-23
Rad. cool fan relay 3rd stage	18-20
Rad. cool fan resistance	22
Rad. cool fan thermoswitches	18-20

Wire Connectors

T1 — single, behind instrument panel
T1a — single, in engine compartment
T1b — single, behind instrument panel
T1c — single, behind instrument panel
T1d — single, behind instrument panel
T2 — double, left rear C-pillar
T2a — double, left rear C-pillar
T2b — double, on evaporator
T2c — double, left rear C-pillar
T2e — double, left rear C-pillar
T2f — double, at A/C compress. clutch
T2g — double, left rear C-pillar
T2h — double, left rear C-pillar
T3a — three-point, left rear C-pillar
T4a — four-point, in air duct
T6a — six-point, in left rear C-pillar

Ground Connections

(10) — near fuse/relay panel
(18) — near left rear C-pillar

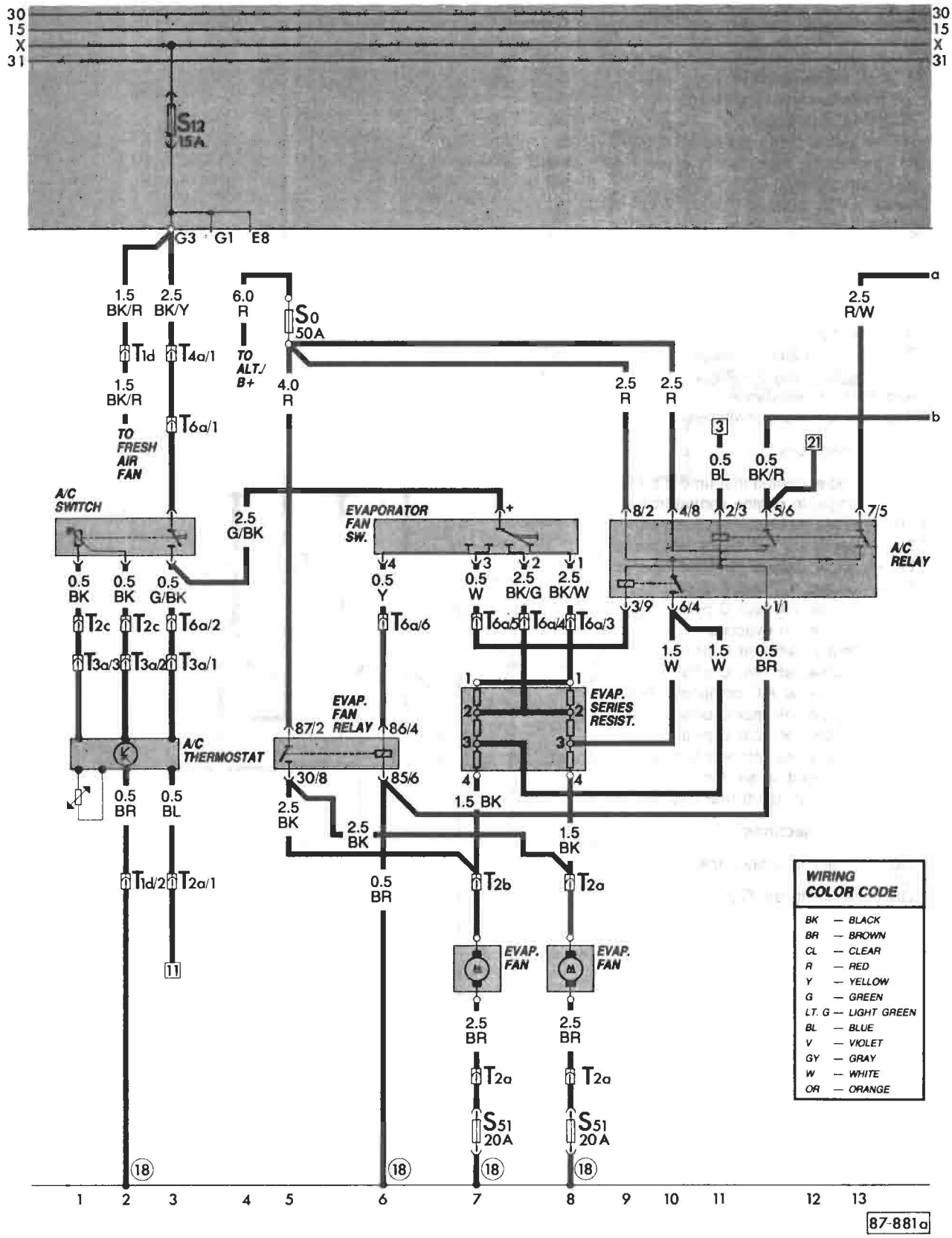
30
15
X
31
S12
15A
G3
G1
E8
1.5 BK/R
2.5 BK/Y
6.0 R
S0
50A
TO ALT./ B+
4.0 R
2.5 R/W
2.5 R
2.5 R
T1d
T4a/1
T6a/1
TO FRESH AIR FAN
A/C SWITCH
2.5 G/BK
EVAPORATOR FAN SW.
0.5 BL
0.5 BK/R
A/C RELAY
8/2
4/8
2/3
5/6
7/5
3/9
6/4
1/1
0.5 BK
0.5 BK
0.5 G/BK
0.5 Y
0.5 W
2.5 BK/G
2.5 BK/W
T2c
T6a/2
T6a/6
T6a/5
T6a/4
T6a/3
T3a/3
T3a/2
T3a/1
1.5 W
1.5 W
0.5 BR
EVAP. SERIES RESIST.
EVAP. FAN RELAY
87/2
86/4
A/C THERMOSTAT
30/8
85/6
0.5 BR
0.5 BL
2.5 BK
1.5 BK
T1d/2
T2a/1
T2b
T2a
EVAP. FAN
EVAP. FAN
2.5 BR
2.5 BR
S51
20A
S51
20A
18
1 2 3 4 5 6 7 8 9 10 11 12 13
WIRING COLOR CODE
BK — BLACK
BR — BROWN
CL — CLEAR
R — RED
Y — YELLOW
G — GREEN
LT. G — LIGHT GREEN
BL — BLUE
V — VIOLET
GY — GRAY
W — WHITE
OR — ORANGE
87-881a

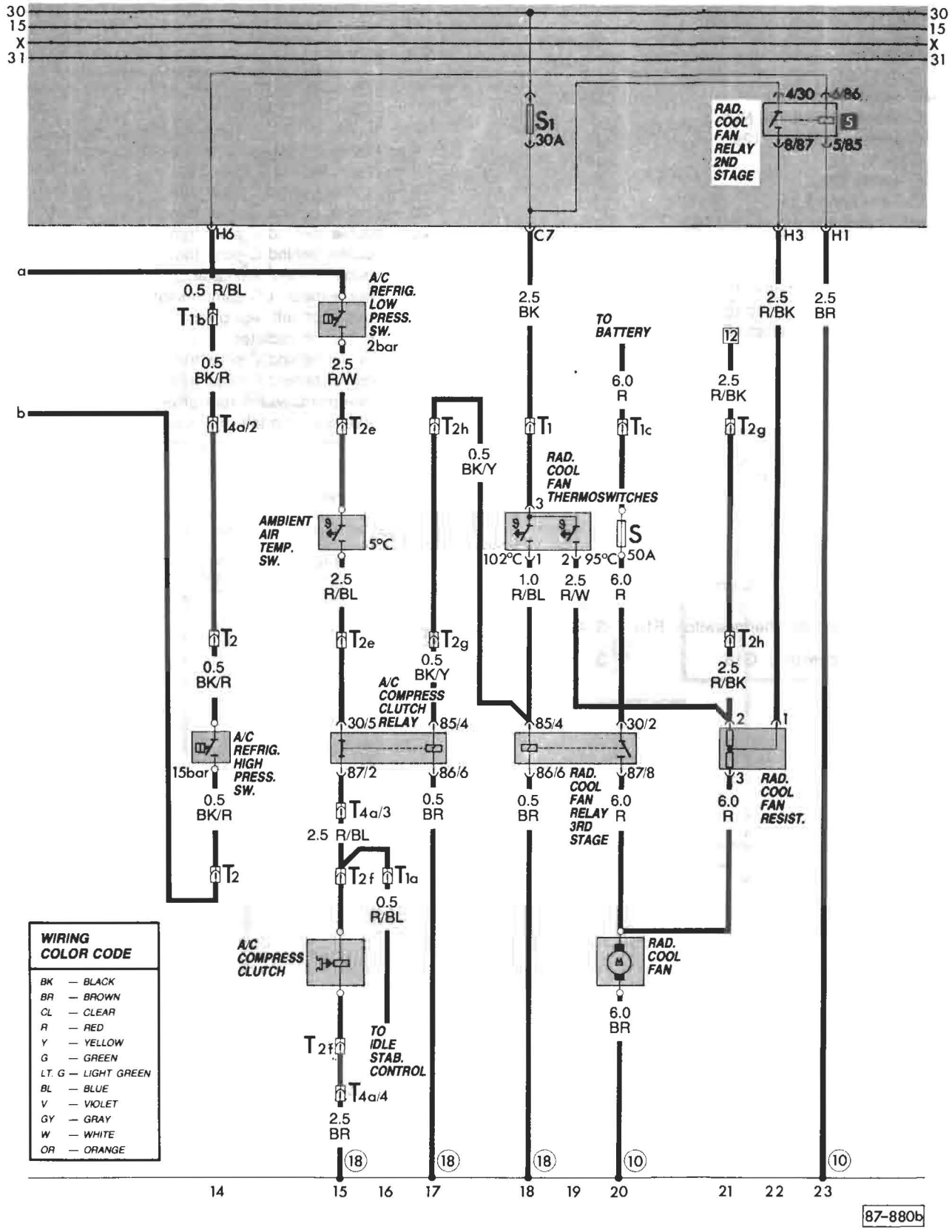
30
15
X
31
S1
30A
RAD. COOL FAN RELAY 2ND STAGE
4/30
6/86
8/87
5/85
H6
C7
H3
H1
a
b
0.5 R/BL
A/C REFRIG. LOW PRESS. SW. 2bar
2.5 BK
TO BATTERY
6.0 R
2.5 R/BK
2.5 BR
0.5 BK/R
2.5 R/W
T1b
T4a/2
T2e
T2h
T1
T1c
T2g
0.5 BK/Y
RAD. COOL FAN THERMOSWITCHES
AMBIENT AIR TEMP. SW.
5°C
102°C
95°C
S
50A
1.0 R/BL
2.5 R/W
6.0 R
2.5 R/BL
T2
A/C COMPRESS CLUTCH RELAY
30/5
85/4
86/6
87/2
A/C REFRIG. HIGH PRESS. SW.
15bar
RAD. COOL FAN RELAY 3RD STAGE
87/8
30/2
RAD. COOL FAN RESIST.
T4a/3
T2f
T1a
A/C COMPRESS CLUTCH
RAD. COOL FAN
TO IDLE STAB. CONTROL
T4a/4
6.0 BR
WIRING COLOR CODE
BK — BLACK
BR — BROWN
CL — CLEAR
R — RED
Y — YELLOW
G — GREEN
LT. G — LIGHT GREEN
BL — BLUE
V — VIOLET
GY — GRAY
W — WHITE
OR — ORANGE
14
15
16
17
18
19
20
21
22
23
87-880b

Description	Current track
A/C clutch relay, J44	26-28
A/C compressor clutch, N25	26
A/C pressure switch, F129	23-24
A/C relay, J32	16-21
A/C switch, E35	2-4
A/C thermostat, E33	2-5
Ambient temperature switch, F38	26
Cooling fan fuse, S42	33
Evaporator blower relay, J157	7-8
Evaporator blower series resistor, N81	10-12
Evaporator blower switch, E110	7-12
Evaporator fan, V20	8, 12
Fuse, S12	4
Fuse, S51	10, 14
Fuse, S23	17
Fuse, S1	31
Radiator cooling fan, V7	33
Radiator cooling fan relay (2nd stage), J101	37-38
Radiator cooling fan relay (3rd stage), J135	31-33
Radiator cooling fan series resistance, N39	36-37
Radiator cooling fan thermoswitch, F18	31-32
Temperature sensor II, G18	3

Wire connectors

T1 — single, behind instrument panel
T1a — single, near ignition coil
T1b — single, behind instrument panel
T1c — single, behind instrument panel
T1d — single, behind C-pillar trim
T2a — double, behind C-pillar trim
T2b — double, behind C-pillar trim
T2c — double, behind C-pillar trim
T2d — double, behind C-pillar trim
T2e — double, on left rear pillar
T2f — double, near A/C compressor
T2g — double, on left rear pillar
T2h — double, on radiator
T2i — double, behind C-pillar trim
T2k — double, behind C-pillar trim
T3a — three-point, on left rear pillar
T3b — three-point, on left rear pillar
T4a — four-point, on left rear pillar
T4b — four-point, on left rear pillar

Ground connections

(30) — near fuse/relay panel
(57) — on left rear pillar

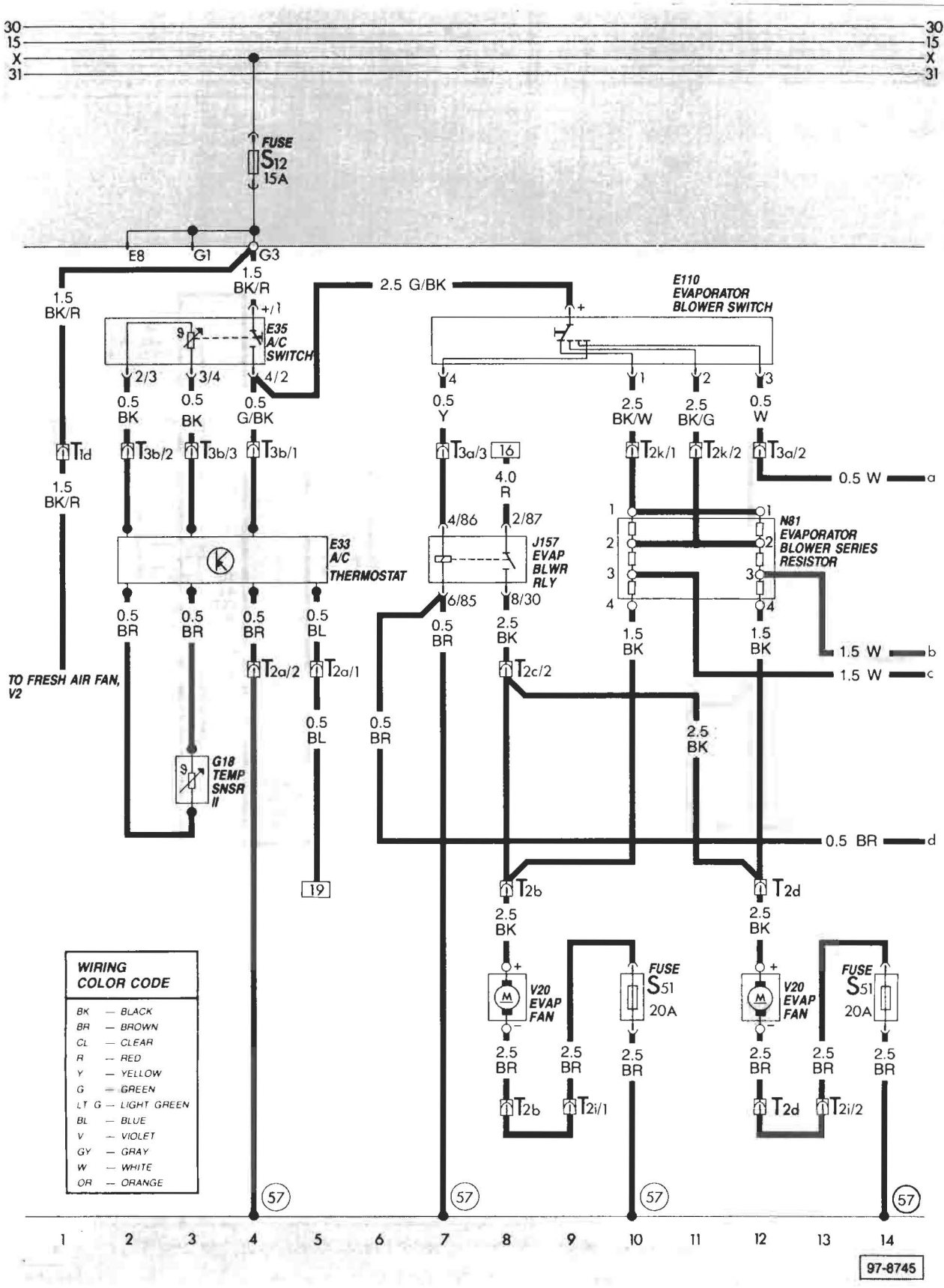
30
15
X
31
FUSE
S12
15A
E8
G1
G3
1.5
BK/R
2.5 G/BK
E110
EVAPORATOR
BLOWER SWITCH
E35
A/C
SWITCH
2/3
3/4
4/2
0.5
BK
0.5
G/BK
0.5
Y
2.5
BK/W
2.5
BK/G
0.5
W
T1d
T3b/2
T3b/3
T3b/1
T3a/3
16
T2k/1
T2k/2
T3a/2
4.0
R
0.5 W
a
4/86
2/87
E33
A/C
THERMOSTAT
J157
EVAP
BLWR
RLY
N81
EVAPORATOR
BLOWER SERIES
RESISTOR
6/85
8/30
0.5
BR
0.5
BL
2.5
BK
1.5
BK
T2a/2
T2a/1
T2c/2
1.5 W
b
1.5 W
c
TO FRESH AIR FAN,
V2
G18
TEMP
SNSR
II
19
0.5 BR
d
T2b
T2d
V20
EVAP
FAN
FUSE
S51
20A
2.5
BR
T2b
T2i/1
T2d
T2i/2
WIRING
COLOR CODE
BK — BLACK
BR — BROWN
CL — CLEAR
R — RED
Y — YELLOW
G — GREEN
LT G — LIGHT GREEN
BL — BLUE
V — VIOLET
GY — GRAY
W — WHITE
OR — ORANGE
57
1
2
3
4
5
6
7
8
9
10
11
12
13
14
97-8745

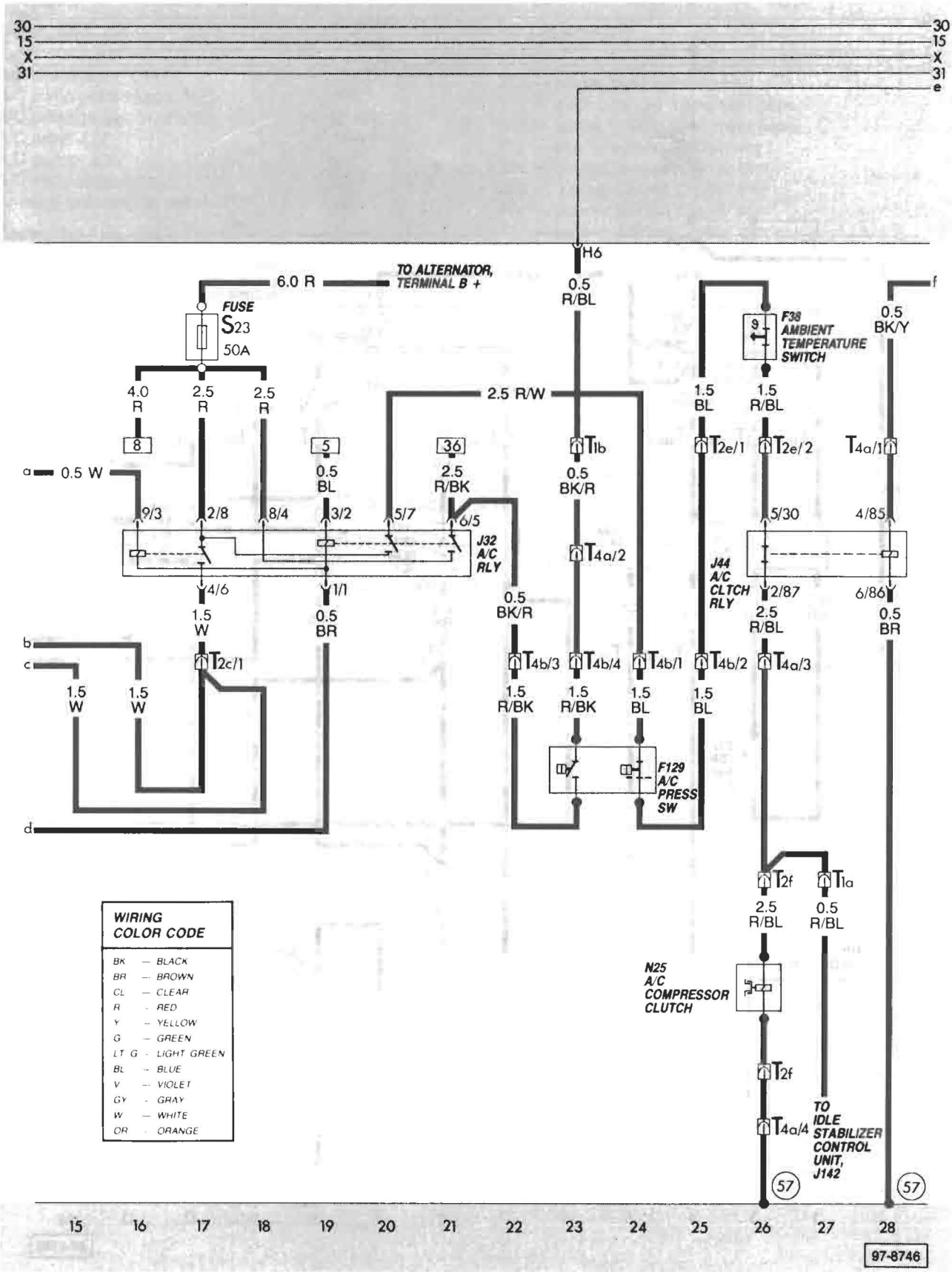
30
15
X
31
e
H6
TO ALTERNATOR, TERMINAL B +
6.0 R
FUSE
S23
50A
4.0 R
2.5 R
2.5 R
2.5 R/W
0.5 R/BL
F38 AMBIENT TEMPERATURE SWITCH
1.5 BL
1.5 R/BL
0.5 BK/Y
8
5
36
T1b
T2e/1
T2e/2
T4a/1
a
0.5 W
0.5 BL
2.5 R/BK
0.5 BK/R
9/3
2/8
8/4
3/2
5/7
6/5
J32 A/C RLY
T4a/2
5/30
4/85
J44 A/C CLTCH RLY
4/6
1/1
2/87
6/86
1.5 W
0.5 BR
0.5 BK/R
2.5 R/BL
0.5 BR
b
c
T2c/1
T4b/3
T4b/4
T4b/1
T4b/2
T4a/3
1.5 W
1.5 W
1.5 R/BK
1.5 R/BK
1.5 BL
1.5 BL
F129 A/C PRESS SW
d
T2f
T1a
2.5 R/BL
0.5 R/BL
N25 A/C COMPRESSOR CLUTCH
T2f
T4a/4
TO IDLE STABILIZER CONTROL UNIT, J142
57
57
15
16
17
18
19
20
21
22
23
24
25
26
27
28
97-8746
WIRING COLOR CODE
BK — BLACK
BR — BROWN
CL — CLEAR
R — RED
Y — YELLOW
G — GREEN
LT G — LIGHT GREEN
BL — BLUE
V — VIOLET
GY — GRAY
W — WHITE
OR — ORANGE

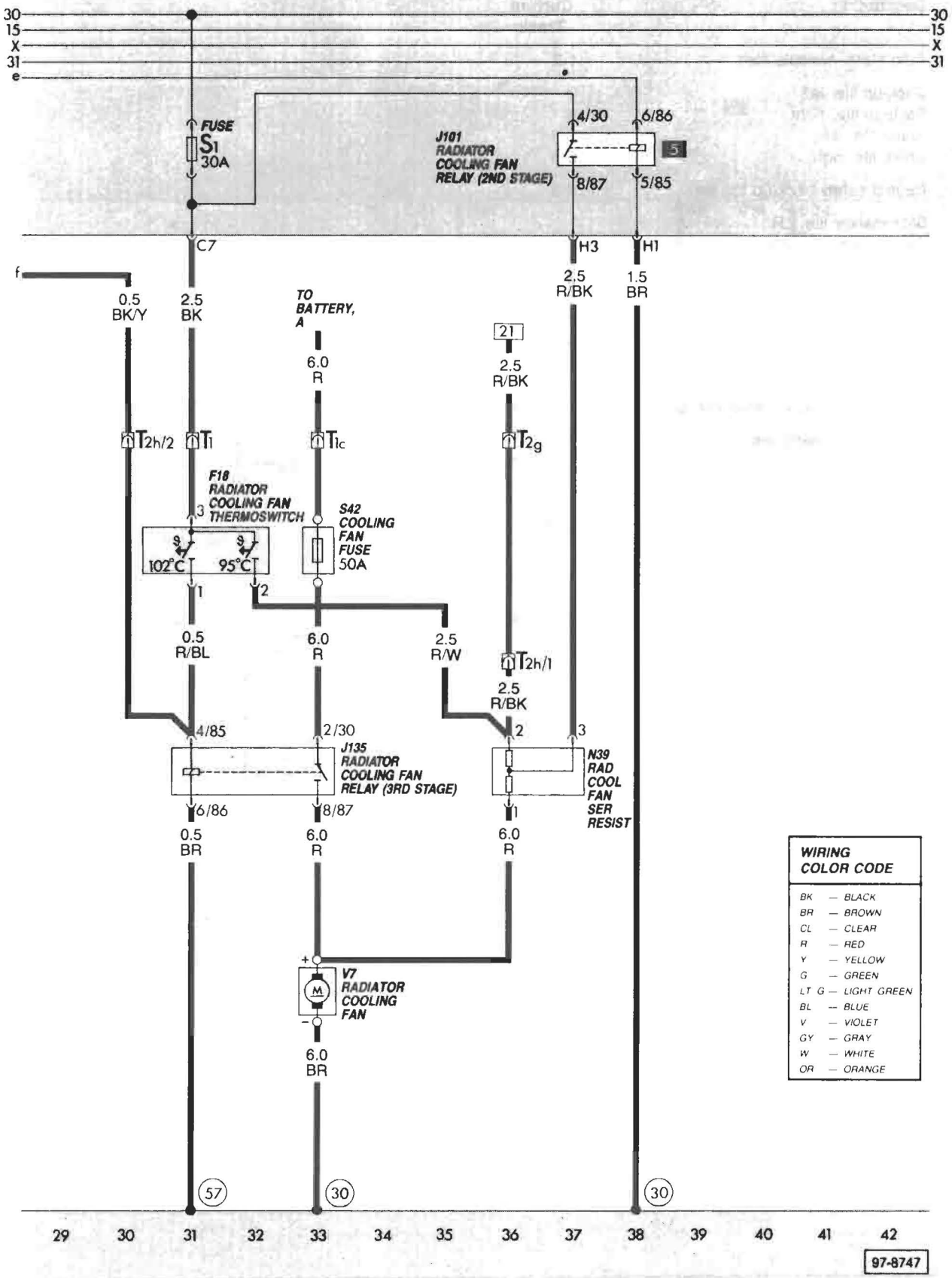

WIRING COLOR CODE

BK	BLACK
BR	BROWN
CL	CLEAR
R	RED
Y	YELLOW
G	GREEN
LT G	LIGHT GREEN
BL	BLUE
V	VIOLET
GY	GRAY
W	WHITE
OR	ORANGE

Description	Current Track
Auto trans. console lites	1-2
Back-up lite, left	3
Back-up lite, right	5
Brake lite, left	2-3
Brake lite, right	5-6
Neutral safety/back-up lite sw.	2-5
Side marker lite, LR	1
Side marker lite, RR	8
Tail lite, left	2
Tail lite, right	7
Turn sig., LR	2-3
Turn sig., RR	6

Wire Connectors

T1b — single, wire distributor, eng. compart.

Ground Connections

(12) — on sub-frame, LF

(15) — eng. compart., under ignition coil

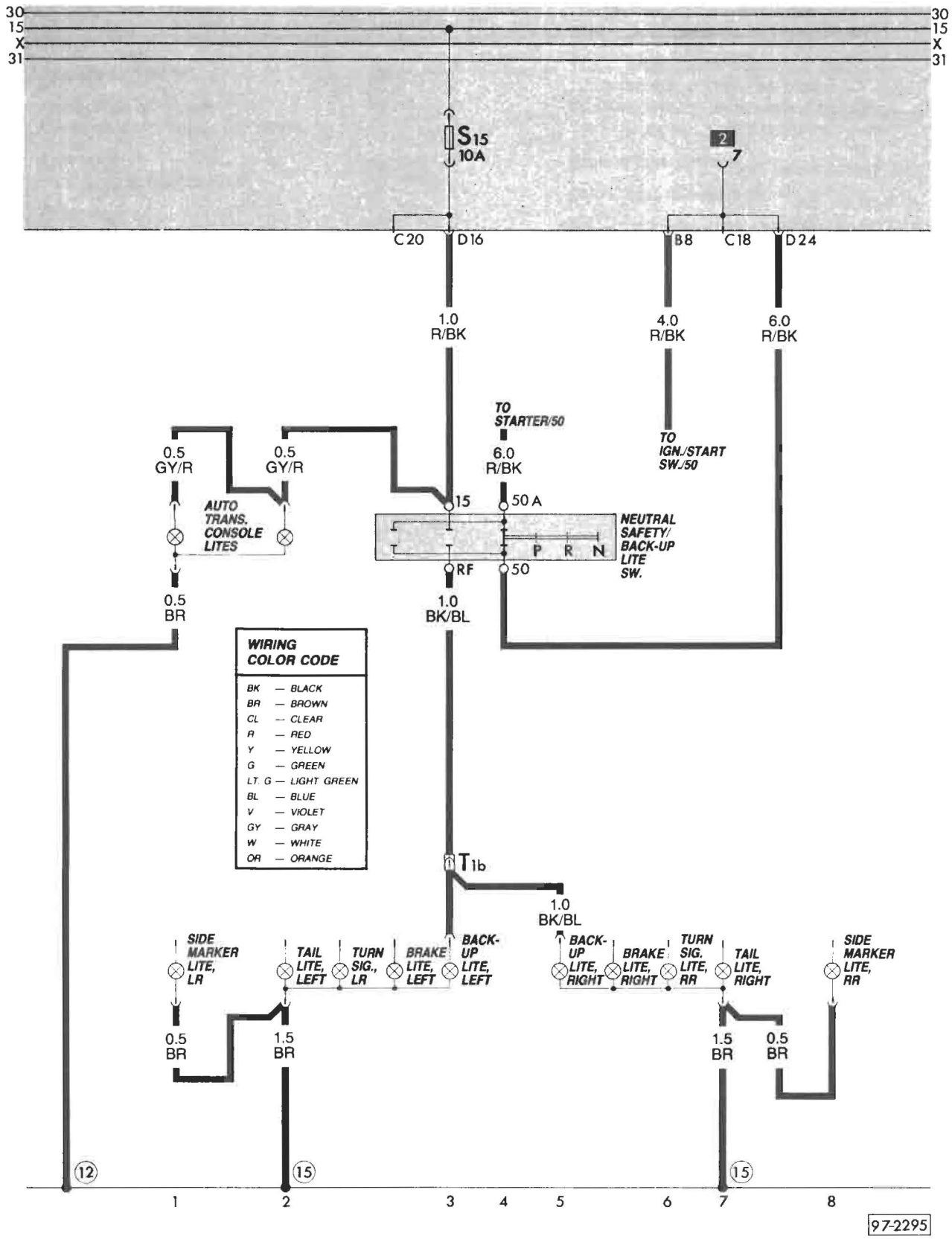
30
15
X
31
S15
10A
2
7
C20
D16
B8
C18
D24
1.0
R/BK
4.0
R/BK
6.0
R/BK
TO STARTER/50
TO IGN./START SW./50
0.5
GY/R
0.5
GY/R
AUTO TRANS. CONSOLE LITES
15
50 A
NEUTRAL SAFETY/ BACK-UP LITE SW.
P R N
RF
50
0.5
BR
1.0
BK/BL
WIRING COLOR CODE
BK — BLACK
BR — BROWN
CL — CLEAR
R — RED
Y — YELLOW
G — GREEN
LT. G — LIGHT GREEN
BL — BLUE
V — VIOLET
GY — GRAY
W — WHITE
OR — ORANGE
T1b
1.0
BK/BL
SIDE MARKER LITE, LR
TAIL LITE, LEFT
TURN SIG., LR
BRAKE LITE, LEFT
BACK-UP LITE, LEFT
BACK-UP LITE, RIGHT
BRAKE LITE, RIGHT
TURN SIG. LITE, RR
TAIL LITE, RIGHT
SIDE MARKER LITE, RR
0.5
BR
1.5
BR
1.5
BR
0.5
BR
12
15
15
1
2
3
4
5
6
7
8
97-2295

Description	Current track
By-pass air blower	7
Combustion air blower	10
Combustion air blower suppressor	12
Fuel pump	9
Fuel pump contact breaker	9
Glow/spark plug	13,14
Glowplug/heater condenser	14
Heater contact breaker	12
Heater indicator lite	3
Heater relay	8-11
Heater relay	5-7
Heater-time temperature control switch	1-4
Heater/combustion sensor	11-13
Heater/overheat control switch	8
Ignition coil	12
Main suppressor	7
Safety switch (relay)	15,16
Temperature sensor (NTC)	17

Wire connectors

T1a — single, under instrument panel
T2 — double, on fresh air blower
T4a — four-point, under instrument panel
T4b — four-point, under instrument panel

Ground connections

(8) — near fuse/relay panel
(18) — on crossmember near fuel pump

Go to next page

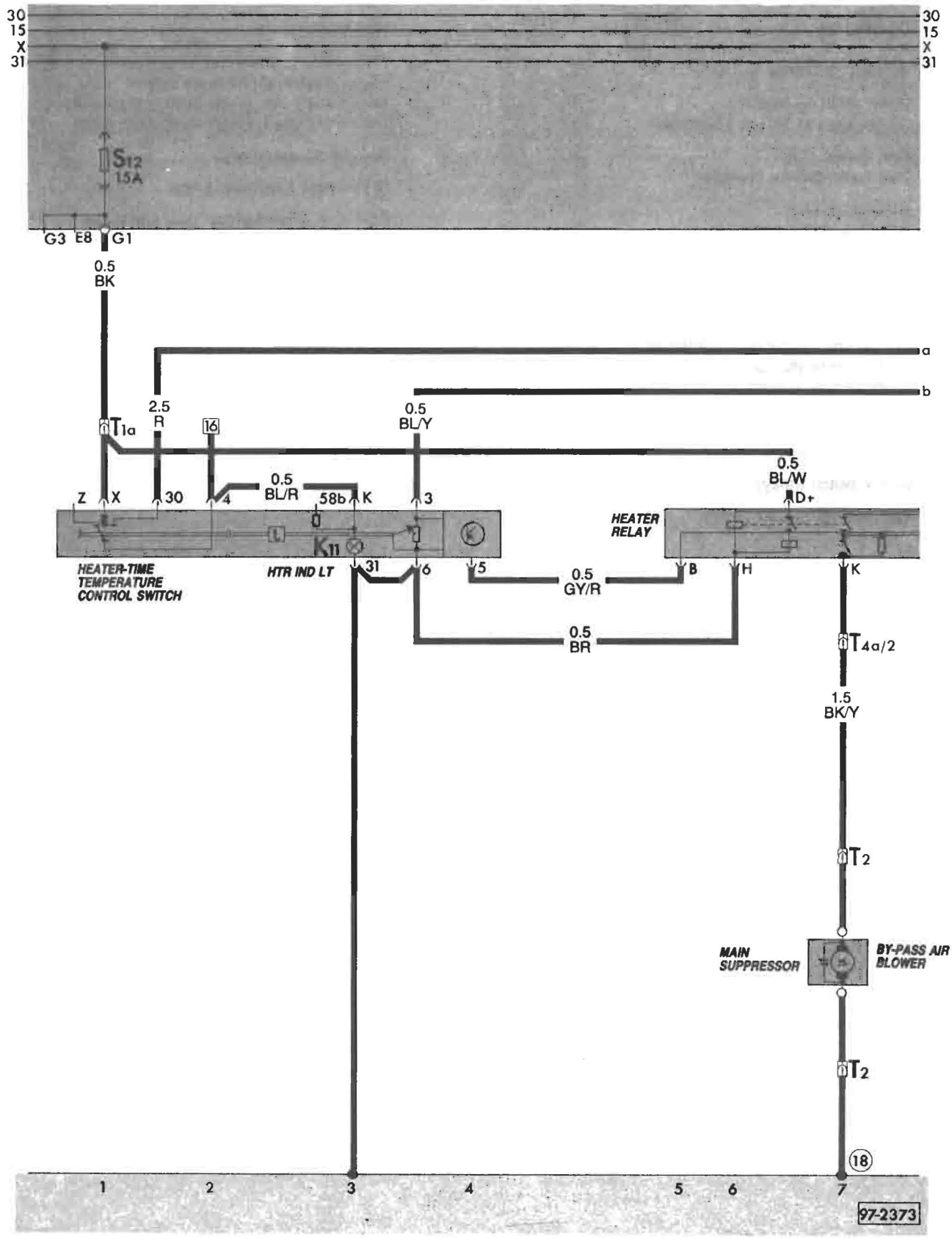
30
15
X
31
S12
15A
G3 E8 G1
0.5
BK
a
b
2.5
R
T1a
16
0.5
BL/Y
0.5
BL/W
D+
Z X 30 4
0.5
BL/R
58b K 3
K11
HEATER-TIME
TEMPERATURE
CONTROL SWITCH
HTR IND LT
31 6 5
0.5
GY/R
HEATER
RELAY
B H K
0.5
BR
T4a/2
1.5
BK/Y
T2
MAIN
SUPPRESSOR
BY-PASS AIR
BLOWER
T2
18
1 2 3 4 5 6 7
97-2373

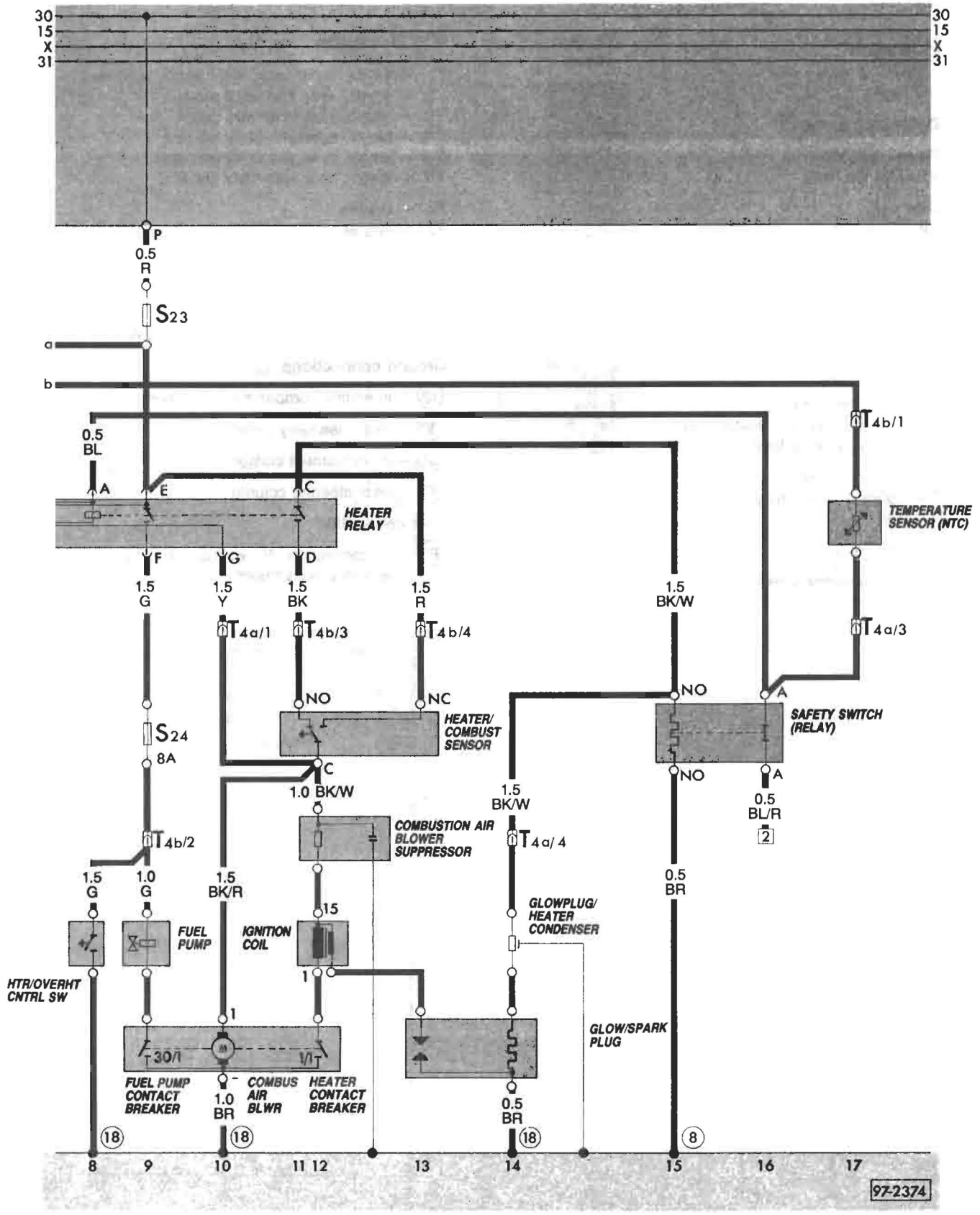
30
15
X
31
30
15
X
31
P
0.5
R
S23
a
b
0.5
BL
A
E
C
HEATER
RELAY
F
G
D
1.5
G
1.5
Y
1.5
BK
1.5
R
1.5
BK/W
T4b/1
TEMPERATURE
SENSOR (NTC)
T4a/1
T4b/3
T4b/4
T4a/3
NO
NC
NO
A
HEATER/
COMBUST
SENSOR
SAFETY SWITCH
(RELAY)
S24
8A
C
1.0 BK/W
NO
A
0.5
BL/R
2
1.5
BK/W
COMBUSTION AIR
BLOWER
SUPPRESSOR
T4b/2
T4a/4
1.5
G
1.0
G
1.5
BK/R
15
0.5
BR
GLOWPLUG/
HEATER
CONDENSER
FUEL
PUMP
IGNITION
COIL
HTR/OVERHT
CNTRL SW
1
1
30/1
1/1
GLOW/SPARK
PLUG
FUEL PUMP
CONTACT
BREAKER
1.0
BR
COMBUS
AIR
BLWR
HEATER
CONTACT
BREAKER
0.5
BR
18
18
18
8
8
9
10
11 12
13
14
15
16
17
97-2374

Description	Current track
A/C diode	16,17
Combustion air blower	23
Flame detector	22
Fresh air fan relay	4-6
Glow plug	24
Glow plug relay	26,27
Heater control lever switch	9
Heater control unit	18-24
Heater fan relay	1-3
Metering pump	20
Monovalve	8
Monovalve relay	7,8
Programmable timer	11-14
Programmable timer indicator light	14
Programmable timer light	11
Recirculation pump	13
Recirculation pump relay	15-17
Resistor	23
Series resistor	24
Temperature sensor (NTC)	21
Thermoswitch	7
Time relay	9,10

Wire connectors

T1 — single, under instrument panel, right side
T1a — single, near fuse/relay panel
T1b — single, near fuse/relay panel
T1d — single, in engine compartment
T1e — single, in engine compartment
T1f — single, near fuse/relay panel

T2 — double,
T2a — double,
T2c — double,

T6a — six-point, in engine compartment, left side
T6b — six-point, near fuse/relay panel

T12 — twelve-point, on heater control unit

Ground connections

(12) — in engine compartment, left side
(30) — near fuse/relay panel
(31) — on instrument cluster
(42) — near steering column

Plus connection

(P1) — + connection (30) wire distributor box, engine compartment

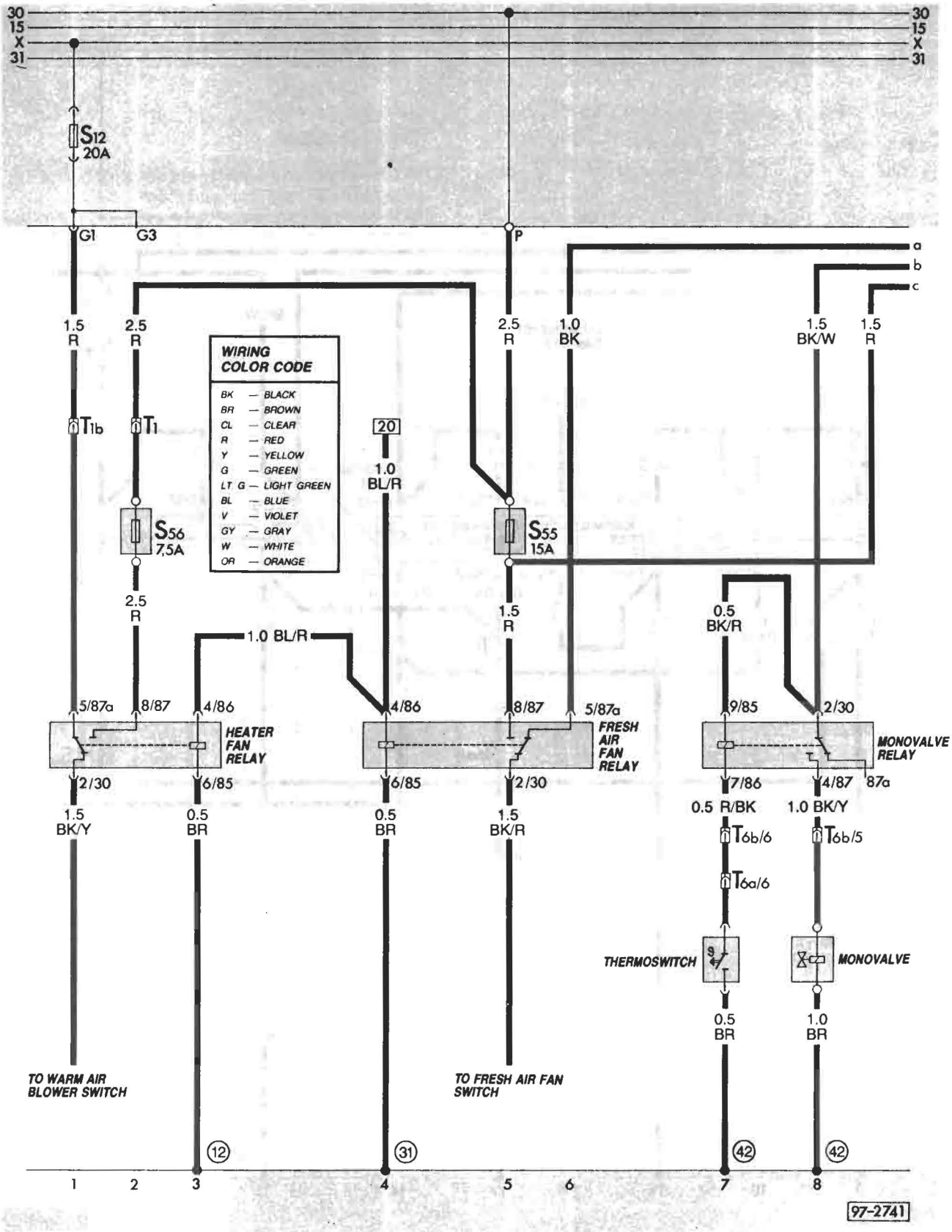
30
15
X
31
S12
20A
G1
G3
P
a
b
c
1.5
R
2.5
R
2.5
R
1.0
BK
1.5
BK/W
1.5
R
WIRING
COLOR CODE
BK — BLACK
BR — BROWN
CL — CLEAR
R — RED
Y — YELLOW
G — GREEN
LT G — LIGHT GREEN
BL — BLUE
V — VIOLET
GY — GRAY
W — WHITE
OR — ORANGE
T1b
T1
20
1.0
BL/R
S56
7.5A
S55
15A
2.5
R
1.5
R
0.5
BK/R
1.0 BL/R
5/87a
8/87
4/86
4/86
8/87
5/87a
9/85
2/30
HEATER
FAN
RELAY
FRESH
AIR
FAN
RELAY
MONOVALVE
RELAY
2/30
6/85
6/85
2/30
7/86
4/87
87a
1.5
BK/Y
0.5
BR
0.5
BR
1.5
BK/R
0.5 R/BK
1.0 BK/Y
T6b/6
T6b/5
T6a/6
THERMOSWITCH
MONOVALVE
0.5
BR
1.0
BR
TO WARM AIR
BLOWER SWITCH
TO FRESH AIR FAN
SWITCH
12
31
42
42
1
2
3
4
5
6
7
8
97-2741

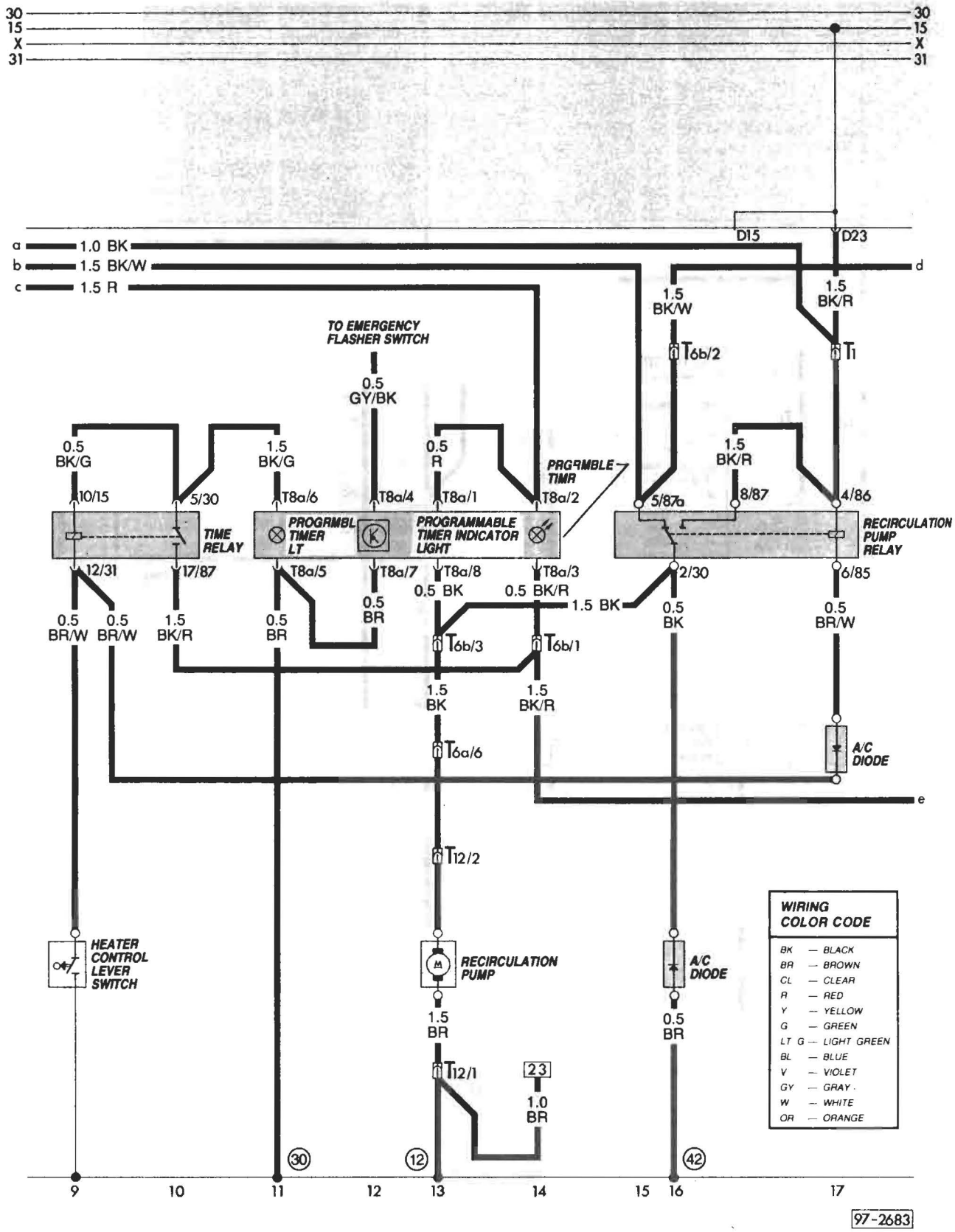
30
15
X
31
D15
D23
a 1.0 BK
b 1.5 BK/W
c 1.5 R
d
e
TO EMERGENCY FLASHER SWITCH
0.5 GY/BK
1.5 BK/W
1.5 BK/R
T6b/2
T1
0.5 BK/G
1.5 BK/G
0.5 R
PRGRMBLE TIMR
1.5 BK/R
10/15
5/30
T8a/6
T8a/4
T8a/1
T8a/2
5/87a
8/87
4/86
TIME RELAY
PROGRMBL TIMER LT
PROGRAMMABLE TIMER INDICATOR LIGHT
RECIRCULATION PUMP RELAY
12/31
17/87
T8a/5
T8a/7
T8a/8
T8a/3
2/30
6/85
0.5 BK
0.5 BK/R
1.5 BK
0.5 BR/W
0.5 BR/W
1.5 BK/R
0.5 BR
0.5 BK
0.5 BR/W
T6b/3
T6b/1
1.5 BK
1.5 BK/R
T6a/6
A/C DIODE
T12/2
HEATER CONTROL LEVER SWITCH
RECIRCULATION PUMP
A/C DIODE
1.5 BR
0.5 BR
T12/1
23
1.0 BR
30
12
42
9
10
11
12
13
14
15
16
17
97-2683
WIRING COLOR CODE
BK — BLACK
BR — BROWN
CL — CLEAR
R — RED
Y — YELLOW
G — GREEN
LT G — LIGHT GREEN
BL — BLUE
V — VIOLET
GY — GRAY
W — WHITE
OR — ORANGE

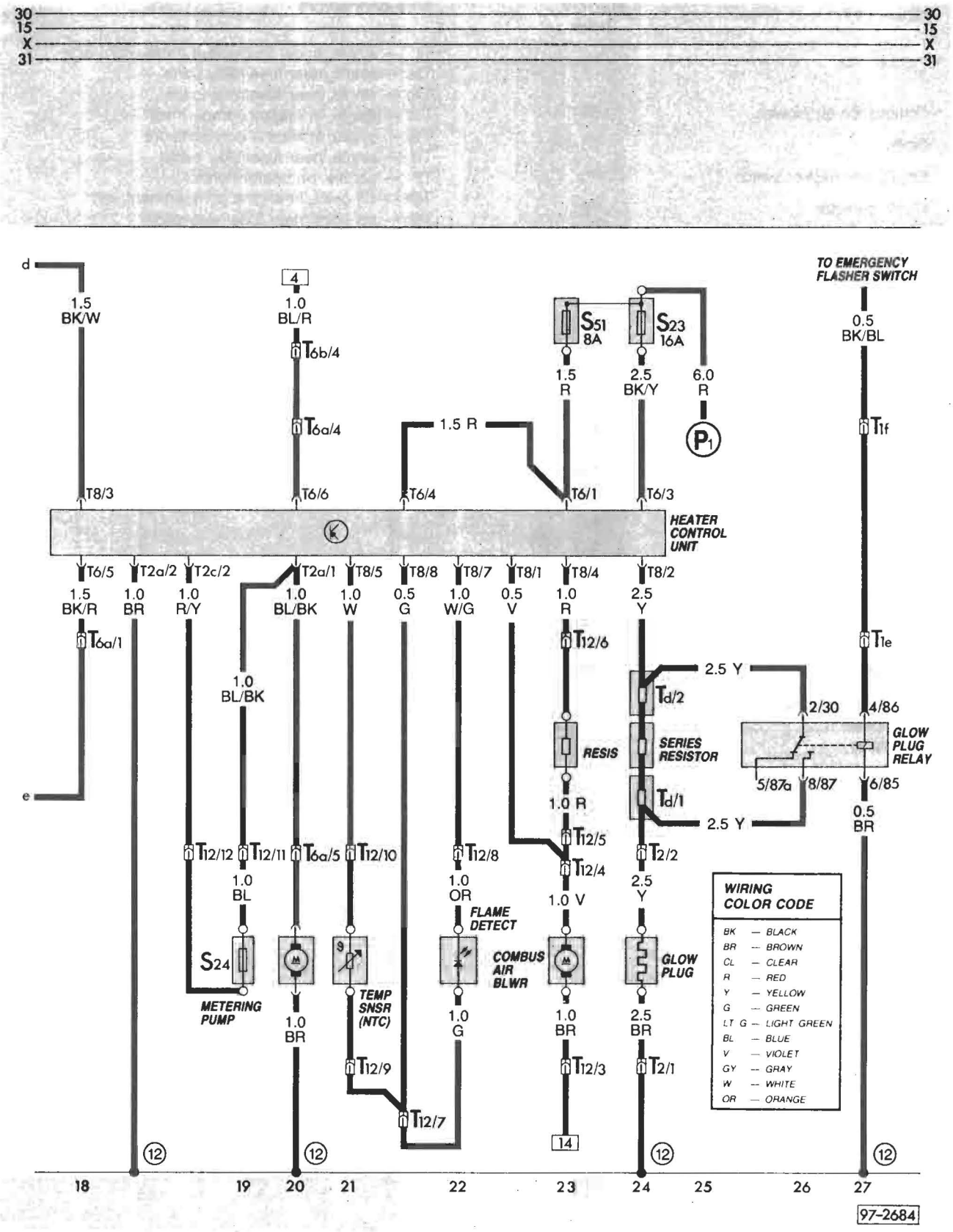
30
15
X
31
d
1.5 BK/W
T8/3
4
1.0 BL/R
T6b/4
T6a/4
T6/6
1.5 R
T6/4
S51 8A
S23 16A
1.5 R
2.5 BK/Y
6.0 R
P1
T6/1
T6/3
TO EMERGENCY FLASHER SWITCH
0.5 BK/BL
T1f
HEATER CONTROL UNIT
T6/5
T2a/2
T2c/2
T2a/1
T8/5
T8/8
T8/7
T8/1
T8/4
T8/2
1.5 BK/R
1.0 BR
1.0 R/Y
1.0 BL/BK
1.0 W
0.5 G
1.0 W/G
0.5 V
1.0 R
2.5 Y
T6a/1
T12/6
T1e
2.5 Y
Td/2
2/30
4/86
GLOW PLUG RELAY
RESIS
SERIES RESISTOR
5/87a
8/87
6/85
Td/1
2.5 Y
0.5 BR
1.0 R
T12/5
T12/4
T2/2
T12/12
T12/11
T6a/5
T12/10
T12/8
1.0 BL
1.0 OR
1.0 V
2.5 Y
WIRING COLOR CODE
BK — BLACK
BR — BROWN
CL — CLEAR
R — RED
Y — YELLOW
G — GREEN
LT G — LIGHT GREEN
BL — BLUE
V — VIOLET
GY — GRAY
W — WHITE
OR — ORANGE
S24
METERING PUMP
TEMP SNSR (NTC)
FLAME DETECT
COMBUS AIR BLWR
GLOW PLUG
1.0 BR
1.0 G
1.0 BR
2.5 BR
T12/9
T12/7
T12/3
T2/1
14
12
18
19
20
21
22
23
24
25
26
27
97-2684

Description	Current track
Combustion air blower	38
Diode	25, 28
Emergency flasher switch	20
Flame detector	36
Fresh air fan relay	9
Fresh air fan switch	8
Fuse	38
Glow plug	39
Glow plug relay	40
Heater control lever switch	15
Heater control unit	39
Heater fan relay	3
Main heater fuse (16 amp)	39
Metering pump	33
Monovalve	13
Monovalve relay	14
Overheat fuse	32
Programmable timer	21
Programmable timer indicator light	22
Programmable timer light	19
Recirculation pump	21
Recirculation pump relay	27
Resistor	38
Temperature sensor (NTC)	34
Thermoswitch	12
Time relay	16

Wire connectors

T1 — single, under instrument panel, right side
T1a — single, near fuse/relay panel
T1b — single, near fuse/relay panel
T1d — single, in engine compartment
T1e — single, in engine compartment
T1f — single, near fuse/relay panel
T2 — double, on heater control
T6a — six-point, in engine compartment, left
T6b — six-point, near fuse/relay panel
T12 — twelve-point, on heater control

Plus (+) wiring connections

(P1) — in wire distributor, engine compartment

Ground connections

(12) — in engine compartment, left side
(30) — near fuse/relay panel
(31) — on instrument cluster
(42) — near steering column

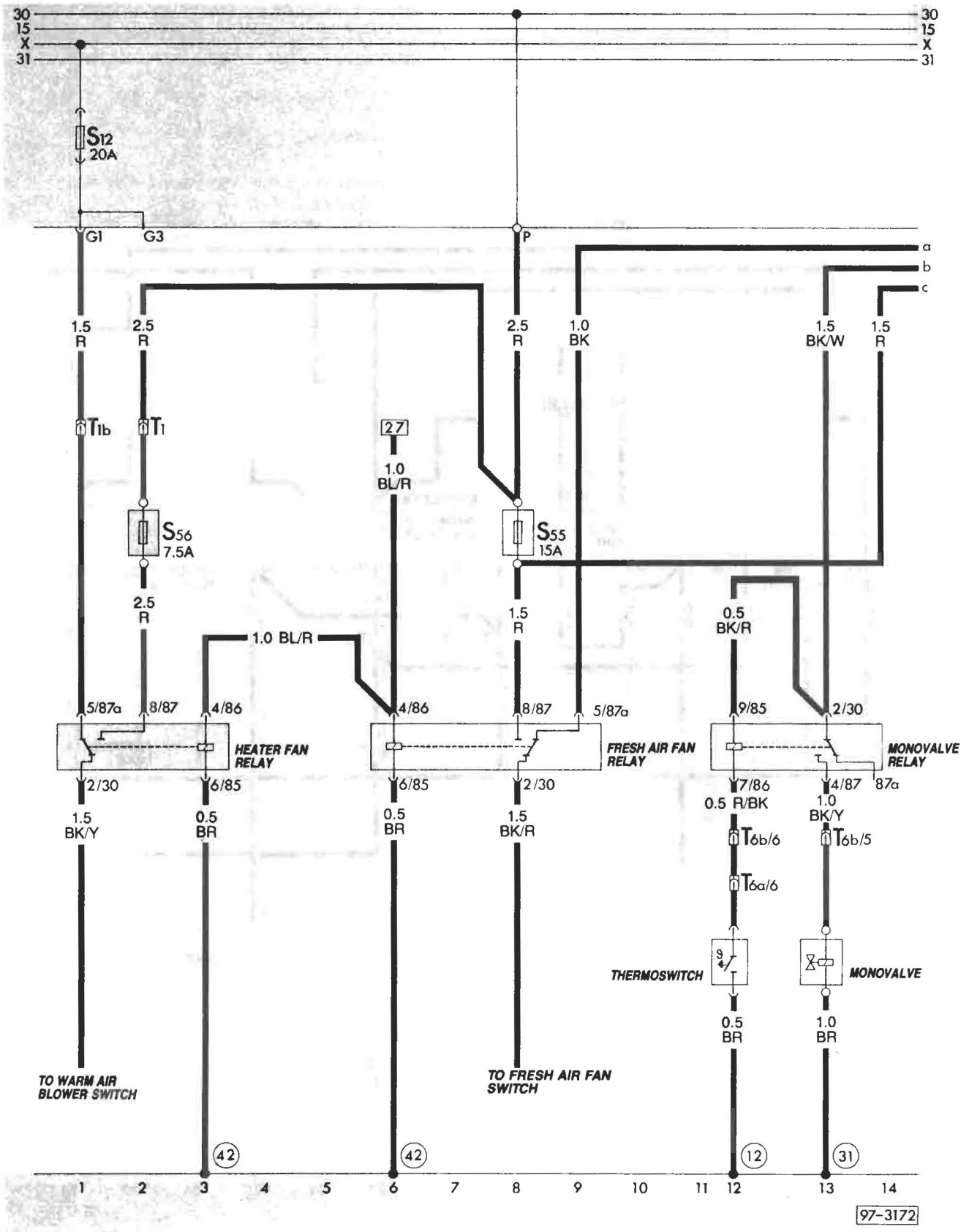
30
15
X
31
S12
20A
G1
G3
P
a
b
c
1.5 R
2.5 R
2.5 R
1.0 BK
1.5 BK/W
1.5 R
T1b
T1
27
1.0 BL/R
S56
7.5A
S55
15A
2.5 R
1.5 R
0.5 BK/R
1.0 BL/R
5/87a
8/87
4/86
4/86
8/87
5/87a
9/85
2/30
HEATER FAN RELAY
FRESH AIR FAN RELAY
MONOVALVE RELAY
2/30
6/85
6/85
2/30
7/86
4/87
87a
1.5 BK/Y
0.5 BR
0.5 BR
1.5 BK/R
0.5 R/BK
1.0 BK/Y
T6b/6
T6b/5
T6a/6
THERMOSWITCH
MONOVALVE
0.5 BR
1.0 BR
TO WARM AIR BLOWER SWITCH
TO FRESH AIR FAN SWITCH
42
42
12
31
1 2 3 4 5 6 7 8 9 10 11 12 13 14
97-3172

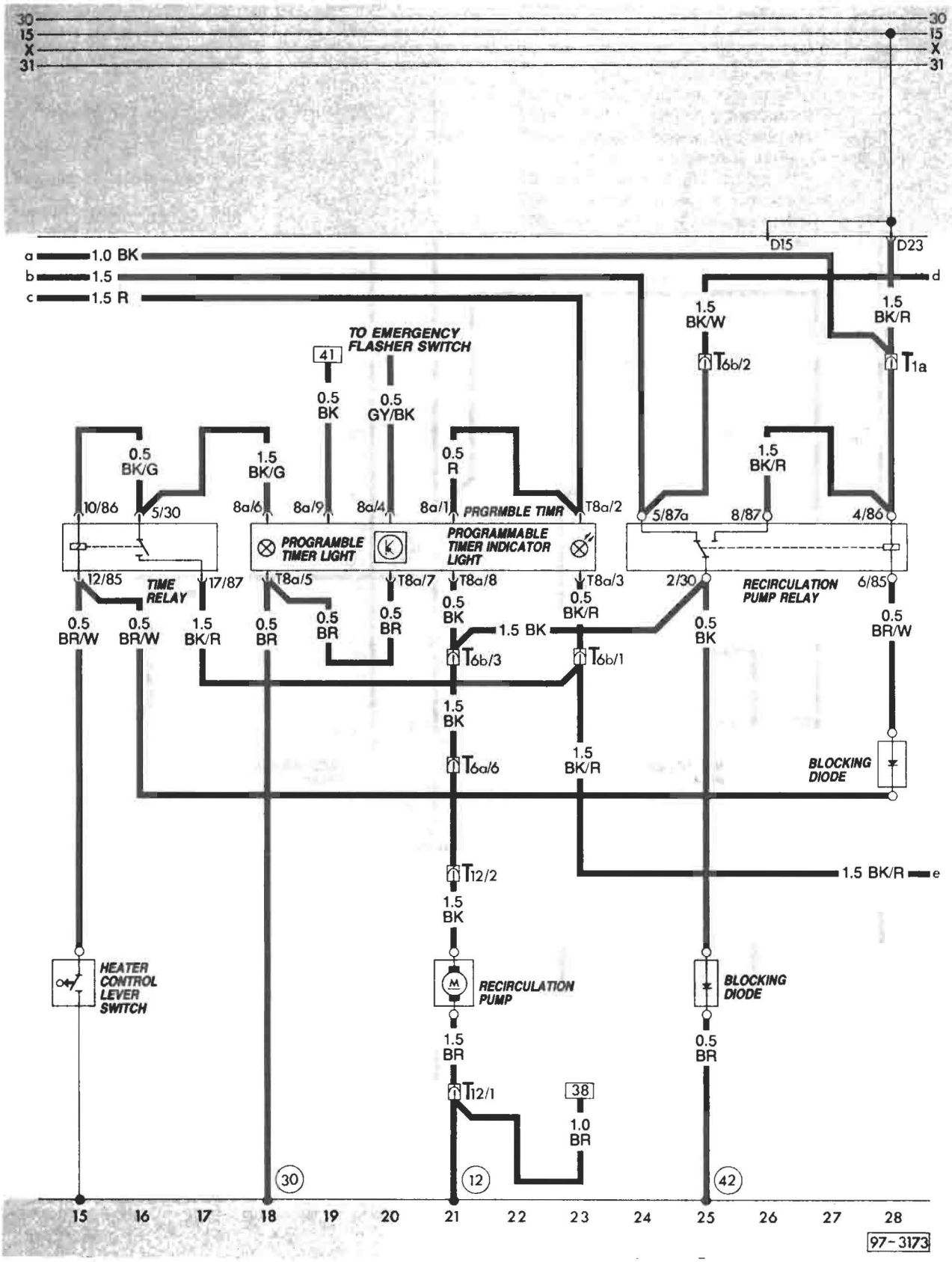
30
15
X
31
D15
D23
a 1.0 BK
b 1.5
c 1.5 R
d
1.5 BK/W
1.5 BK/R
T6b/2
T1a
TO EMERGENCY FLASHER SWITCH
41
0.5 BK
0.5 GY/BK
0.5 BK/G
1.5 BK/G
0.5 R
1.5 BK/R
10/86
5/30
8a/6
8a/9
8a/4
8a/1
PRGRMBLE TIMR
T8a/2
5/87a
8/87
4/86
PROGRAMBLE TIMER LIGHT
PROGRAMMABLE TIMER INDICATOR LIGHT
12/85
TIME RELAY
17/87
T8a/5
T8a/7
T8a/8
T8a/3
2/30
RECIRCULATION PUMP RELAY
6/85
0.5 BR/W
0.5 BR/W
1.5 BK/R
0.5 BR
0.5 BR
0.5 BR
0.5 BK
1.5 BK
0.5 BK/R
0.5 BK
0.5 BR/W
T6b/3
T6b/1
1.5 BK
T6a/6
1.5 BK/R
BLOCKING DIODE
T12/2
1.5 BK/R
e
1.5 BK
HEATER CONTROL LEVER SWITCH
RECIRCULATION PUMP
BLOCKING DIODE
1.5 BR
0.5 BR
T12/1
38
1.0 BR
30
12
42
15 16 17 18 19 20 21 22 23 24 25 26 27 28
97-3173

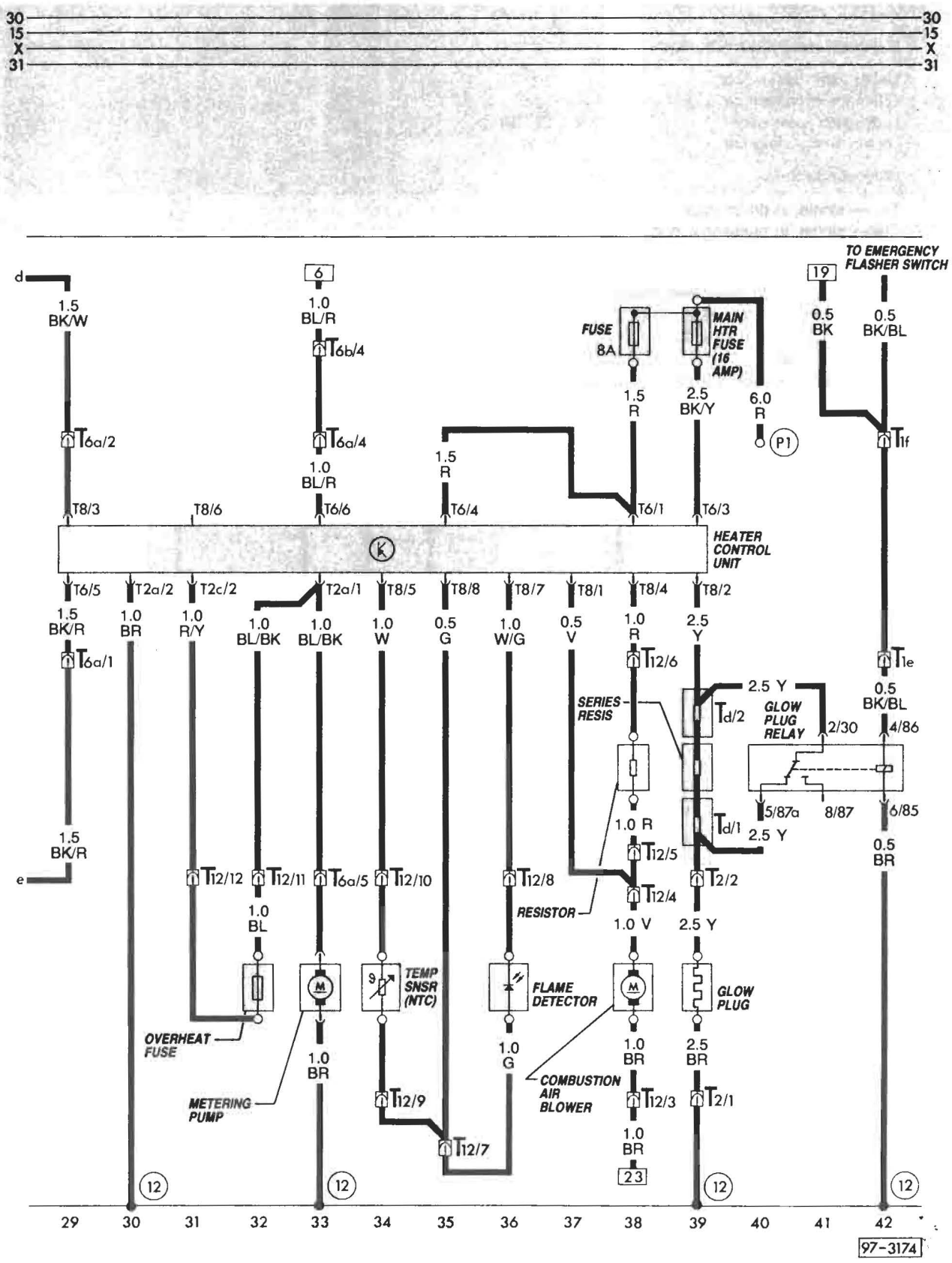
30
15
X
31
TO EMERGENCY FLASHER SWITCH
19
6
d
1.5 BK/W
1.0 BL/R
T6b/4
FUSE 8A
MAIN HTR FUSE (16 AMP)
0.5 BK
0.5 BK/BL
1.5 R
2.5 BK/Y
6.0 R
P1
T6a/2
T6a/4
T1f
1.0 BL/R
1.5 R
T8/3
T8/6
T6/6
T6/4
T6/1
T6/3
HEATER CONTROL UNIT
T6/5
T2a/2
T2c/2
T2a/1
T8/5
T8/8
T8/7
T8/1
T8/4
T8/2
1.5 BK/R
1.0 BR
1.0 R/Y
1.0 BL/BK
1.0 BL/BK
1.0 W
0.5 G
1.0 W/G
0.5 V
1.0 R
2.5 Y
T6a/1
T12/6
T1e
2.5 Y
0.5 BK/BL
SERIES-RESIS
Td/2
GLOW PLUG RELAY
2/30
4/86
5/87a
8/87
6/85
1.0 R
Td/1
2.5 Y
1.5 BK/R
e
T12/5
0.5 BR
T12/12
T12/11
T6a/5
T12/10
T12/8
T12/4
T2/2
1.0 BL
RESISTOR
1.0 V
2.5 Y
TEMP SNSR (NTC)
FLAME DETECTOR
GLOW PLUG
OVERHEAT FUSE
1.0 BR
1.0 G
1.0 BR
2.5 BR
COMBUSTION AIR BLOWER
METERING PUMP
T12/9
T12/3
T2/1
T12/7
1.0 BR
23
12
12
12
12
29
30
31
32
33
34
35
36
37
38
39
40
41
42
97-3174

Description	Current track
Door lock contact, sliding door	9-11
Lock motor, driver door	1,2
Lock motor, passenger door	7,8
Lock motor, rear door	12, 13
Lock motor, sliding door	9-11

Wire connectors

T1 — single, in driver door
T1a — single, in passenger door
T3 — three point, in driver door
T3a — three point, in passenger door
T3b — three point, under instrument panel
T3c — three point, in sliding door
T3d — three point, in rear door
T4 — four point, under instrument panel
T4a — four point, under instrument panel

Ground connector

(10) — under instrument panel

Go to next page

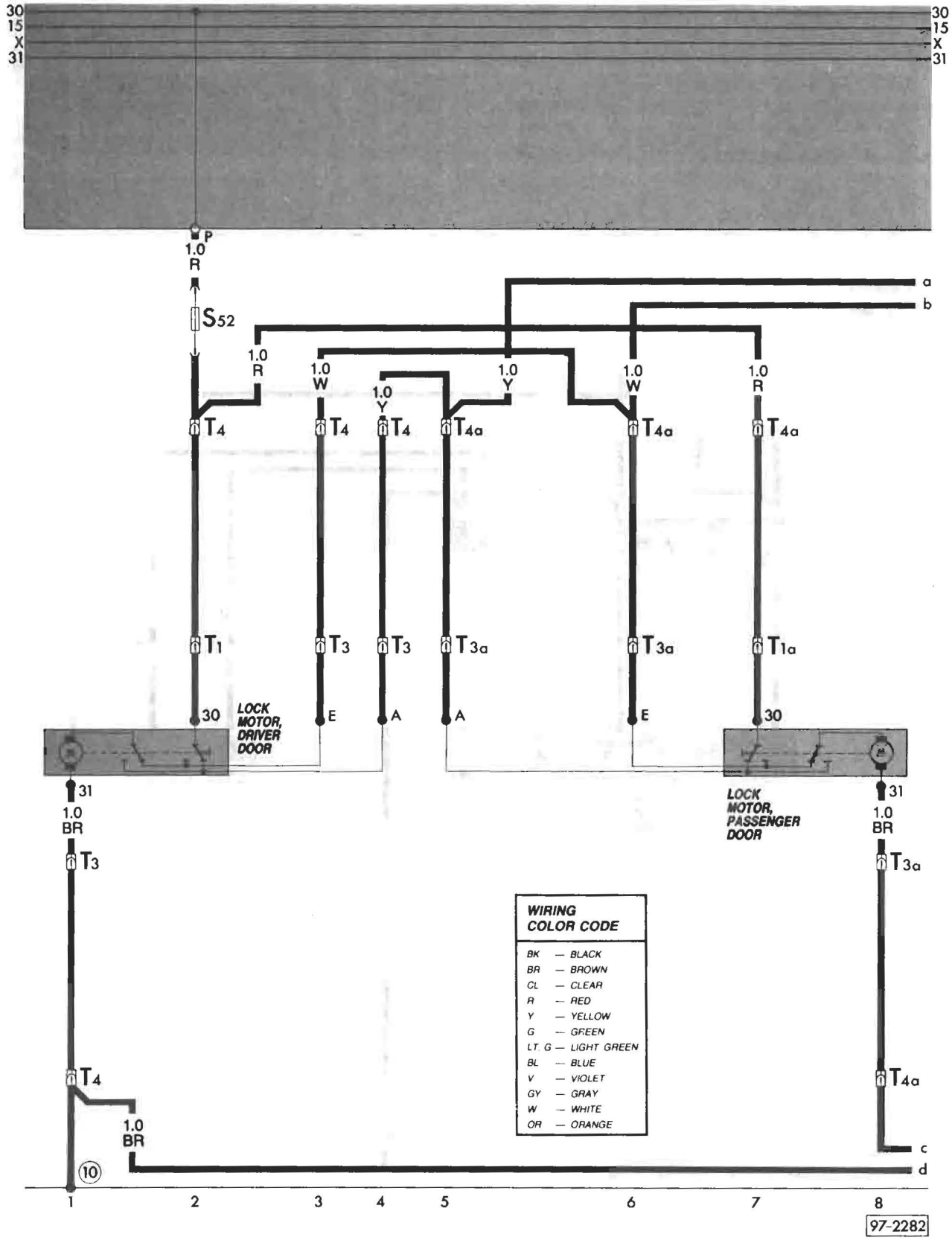

WIRING COLOR CODE	
BK	— BLACK
BR	— BROWN
CL	— CLEAR
R	— RED
Y	— YELLOW
G	— GREEN
LT. G	— LIGHT GREEN
BL	— BLUE
V	— VIOLET
GY	— GRAY
W	— WHITE
OR	— ORANGE

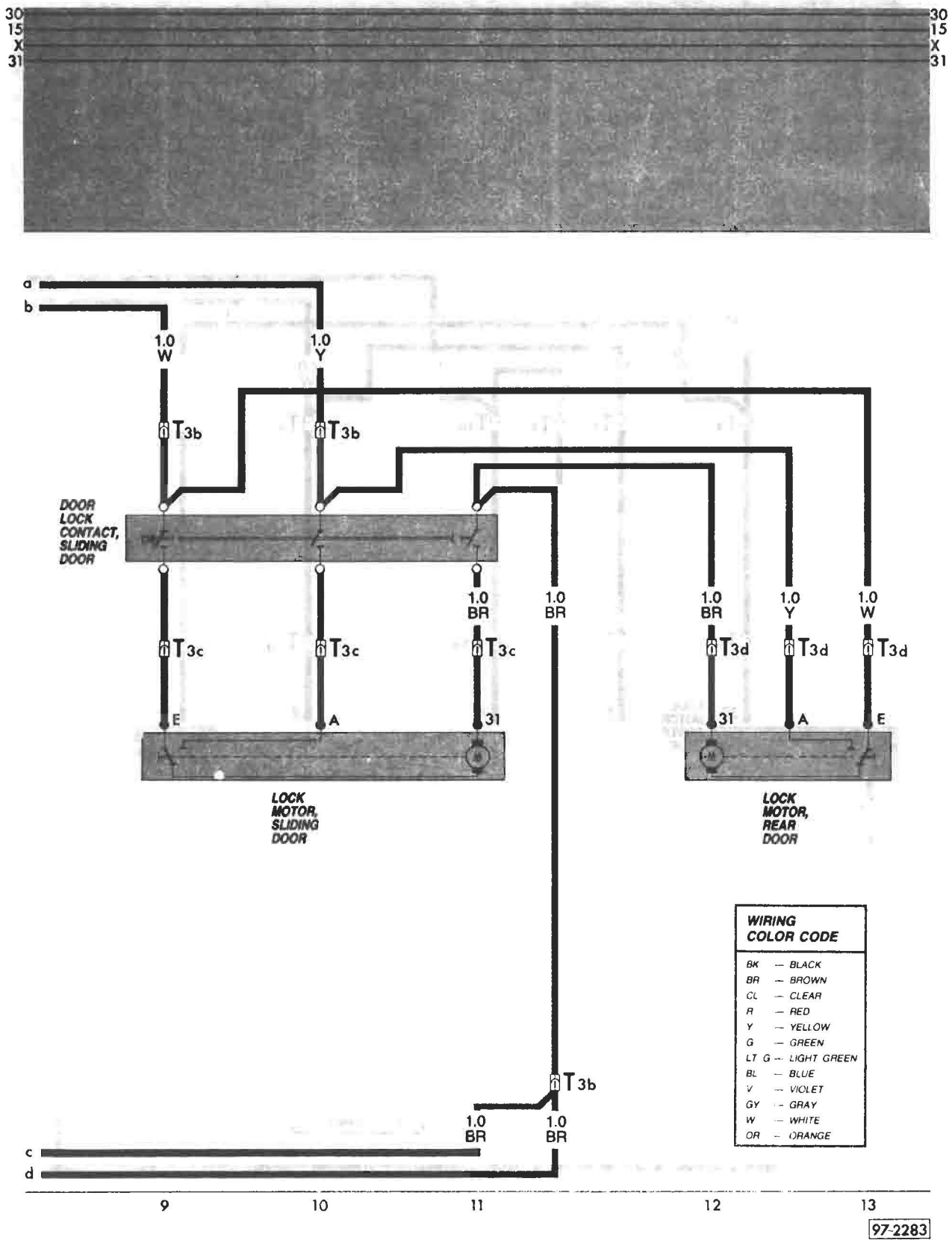
30
15
X
31
30
15
X
31
a
b
1.0 W
1.0 Y
T3b
T3b
DOOR LOCK CONTACT, SLIDING DOOR
1.0 BR
1.0 BR
1.0 BR
1.0 Y
1.0 W
T3c
T3c
T3c
T3d
T3d
T3d
E
A
31
31
A
E
LOCK MOTOR, SLIDING DOOR
LOCK MOTOR, REAR DOOR
T3b
1.0 BR
1.0 BR
c
d
9
10
11
12
13
WIRING COLOR CODE
BK — BLACK
BR — BROWN
CL — CLEAR
R — RED
Y — YELLOW
G — GREEN
LT G — LIGHT GREEN
BL — BLUE
V — VIOLET
GY — GRAY
W — WHITE
OR — ORANGE
97-2283

Description	Current track
Central locking system motor, decklid	11,12
Central locking system motor, driver door	1,2
Central locking system motor, passenger door	5,6
Central locking system motor, sliding door	7-9
Sliding door contact switch	7-10

Wire connectors

T1 — single, in LF door
T1a — single, in RF door
T3 — three-point, in LF door
T3a — three-point, in RF door
T3b — three-point, under inst. panel, right side
T3c — three-point, near upper right "B" pillar
T3d — three-point, upper half of left rear window
T3e — three-point, in rear decklid

Ground connection

(30) — near fuse/relay panel

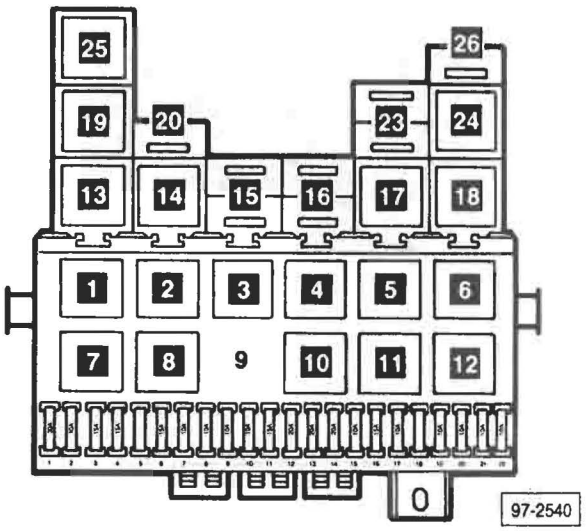

23 — fuse for central locking system

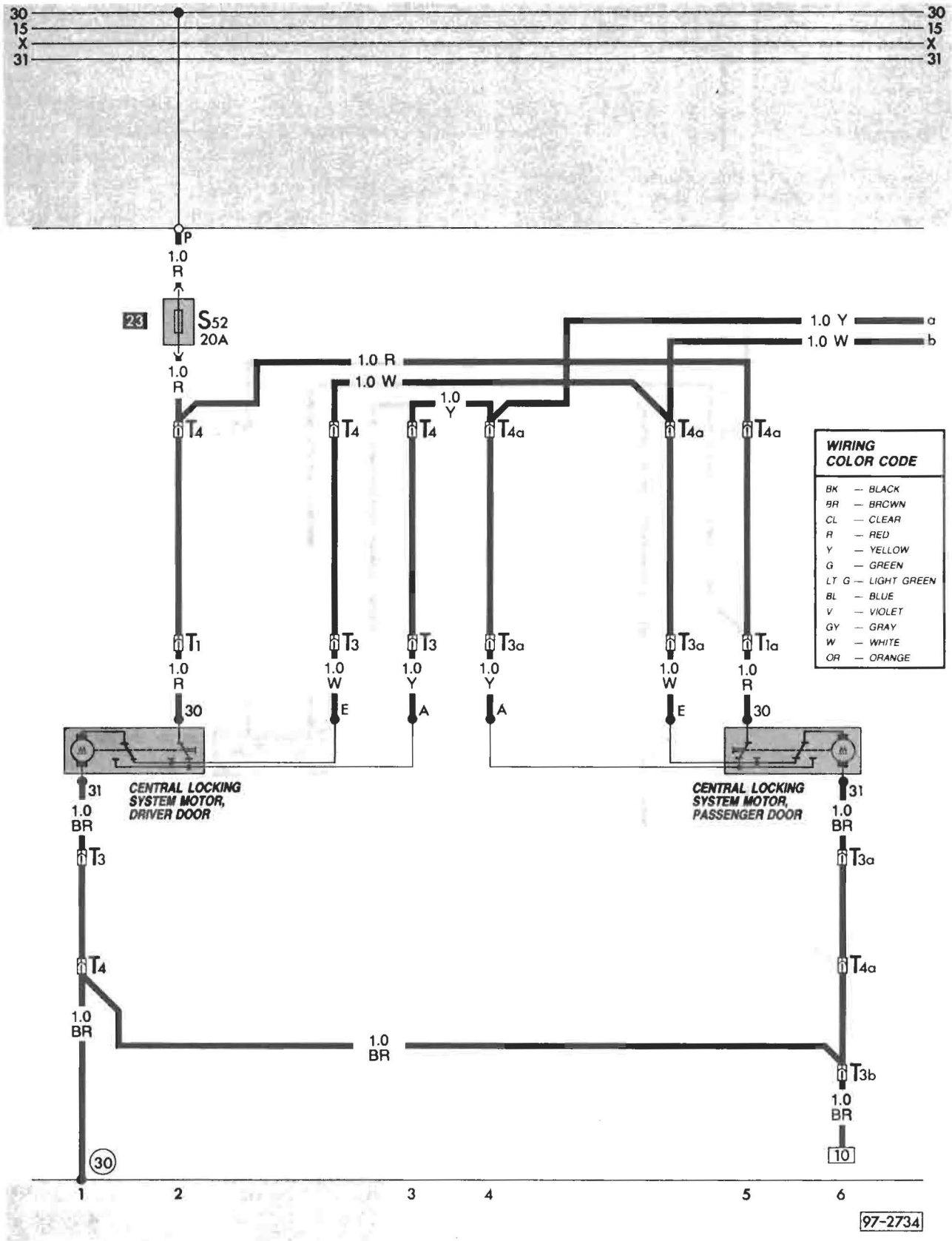
30
15
X
31
P
1.0 R
23
S52
20A
1.0 R
1.0 W
1.0 Y
1.0 Y
a
1.0 W
b
T4
T4
T4
T4a
T4a
T4a
T1
T3
T3
T3a
T3a
T1a
1.0 R
1.0 W
1.0 Y
1.0 Y
1.0 W
1.0 R
30
E
A
A
E
30
31
CENTRAL LOCKING SYSTEM MOTOR, DRIVER DOOR
CENTRAL LOCKING SYSTEM MOTOR, PASSENGER DOOR
31
1.0 BR
1.0 BR
T3
T3a
T4
T4a
1.0 BR
1.0 BR
T3b
1.0 BR
30
10
1
2
3
4
5
6
97-2734
WIRING COLOR CODE
BK — BLACK
BR — BROWN
CL — CLEAR
R — RED
Y — YELLOW
G — GREEN
LT G — LIGHT GREEN
BL — BLUE
V — VIOLET
GY — GRAY
W — WHITE
OR — ORANGE

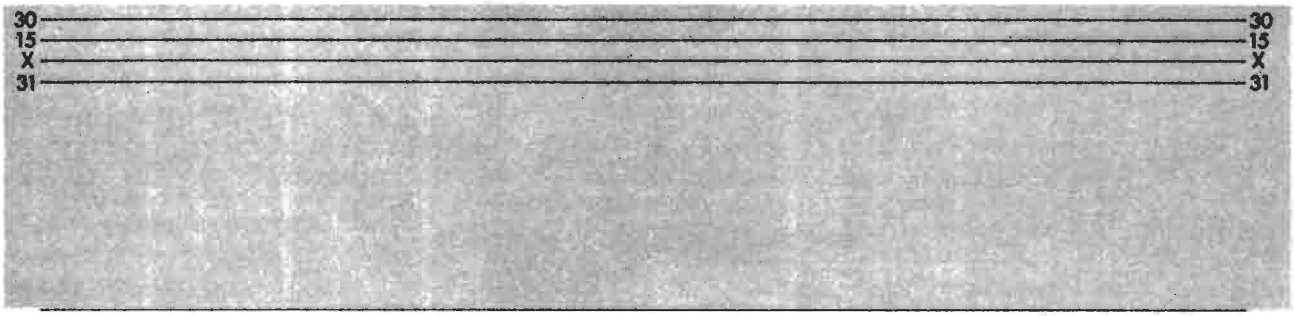

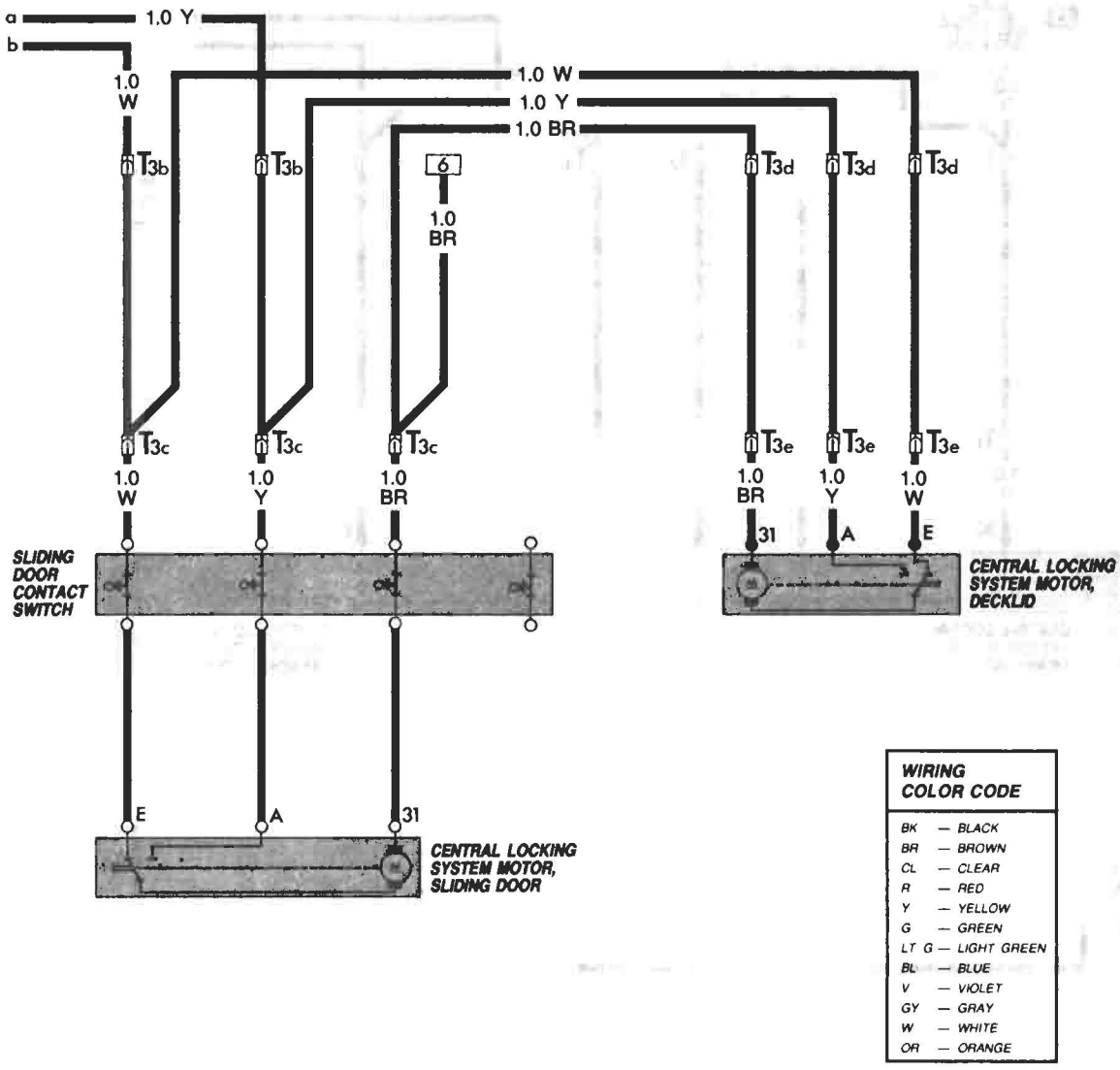

WIRING COLOR CODE

BK	— BLACK
BR	— BROWN
CL	— CLEAR
R	— RED
Y	— YELLOW
G	— GREEN
LT G	— LIGHT GREEN
BL	— BLUE
V	— VIOLET
GY	— GRAY
W	— WHITE
OR	— ORANGE



Description	Current Track
Heat element (crankcase vent)	6
Ignition coil	4-5

Wire connectors

T1 — in wire distributor
T1a — in engine compartment

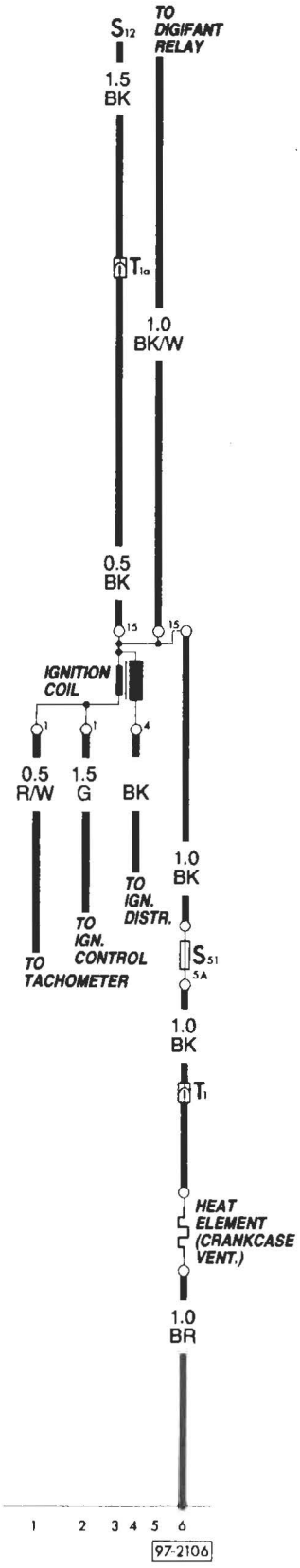

WIRING COLOR CODE	
BK	— BLACK
BR	— BROWN
CL	— CLEAR
R	— RED
Y	— YELLOW
G	— GREEN
LT G	— LIGHT GREEN
BL	— BLUE
V	— VIOLET
GY	— GRAY
W	— WHITE
OR	— ORANGE

Description	Current Track
Heat element (crankcase vent)	4
Ignition coil	2-3

Wire connectors

T1 — single, eng. compartment
T2 — double, wire distributor, eng. compart, LF
T2a — double, under rear seat, left
T3 — three-point, under rear seat, right

Ground connections

(16) — on left cylinder head

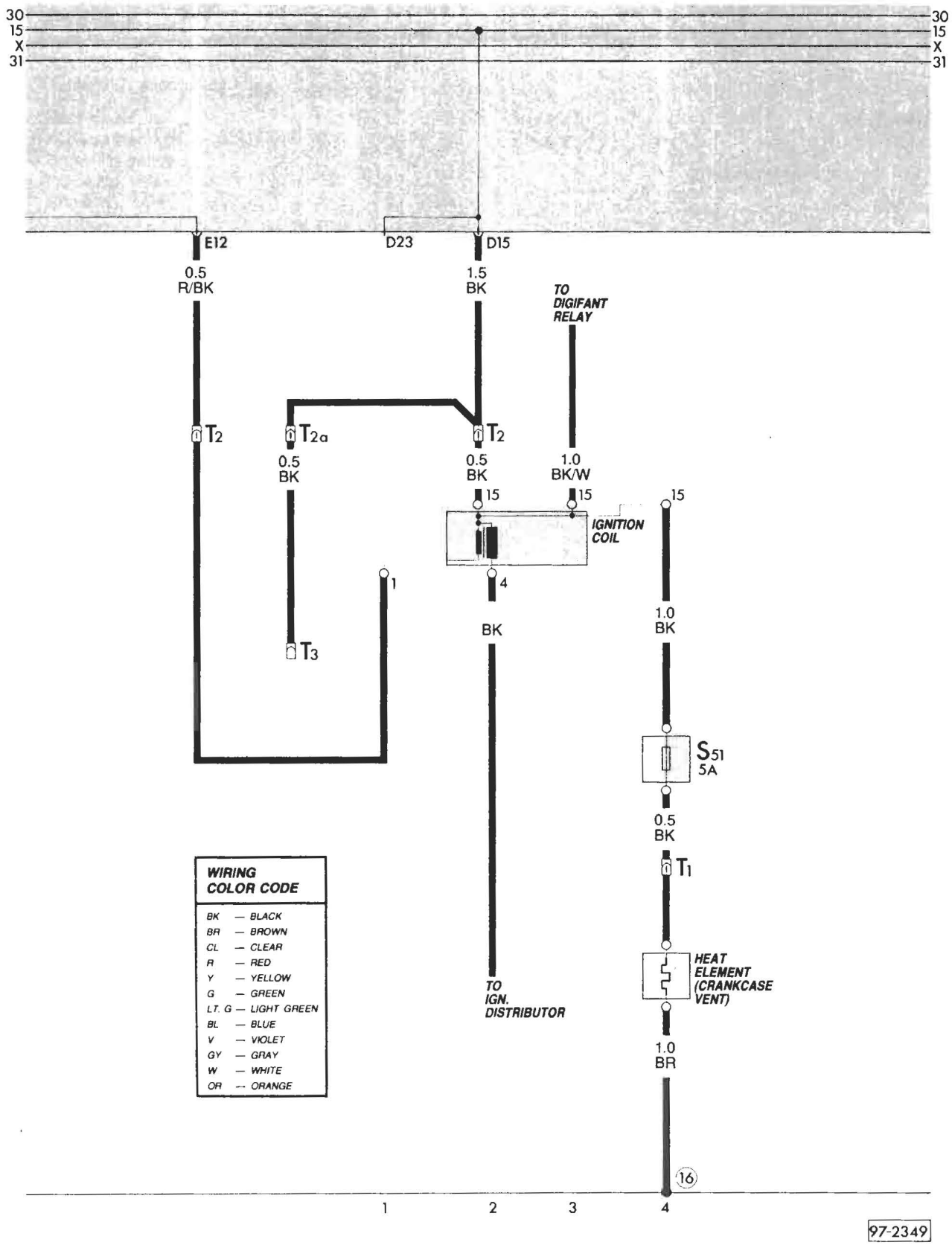

WIRING COLOR CODE

BK	— BLACK
BR	— BROWN
CL	— CLEAR
R	— RED
Y	— YELLOW
G	— GREEN
LT. G	— LIGHT GREEN
BL	— BLUE
V	— VIOLET
GY	— GRAY
W	— WHITE
OR	— ORANGE

Description	Current track
Automatic transmission console lite	4,5
Automatic transmission relay	12,13
Back-up lite, left	7
Back-up lite, right	6
Brake lite switch	9,10
Brake lite, left	8
Brake lite, right	9
Cruise control inductive sender	16
Cruise control switch	15-17
Cruise control, main control unit	14-18
Starter	2,3
Starter cut-out/back-up lite switch	3,4
Vacuum control motor	17,18
Vacuum vent valve, brake	11

Wire connectors

T1 — single, under instrument panel
T1a — single, under instrument panel
T1c — single, eng. compart., near starter
T1f — single, in wire distributor
T2 — double, under instrument panel
T2a — double, under instrument panel
T2b — double, under instrument panel
T3 — three point, in eng. compartment
T3a — three point, under instrument panel
T4 — four point, near cruise control main control
T4b — four point, under instrument panel
T7/ — seven point, in wire distributor box

Ground connections

(9) — under instrument panel
(12) — on left front crossmember
(15) — in eng. compart., under ign. coil

Go to next page

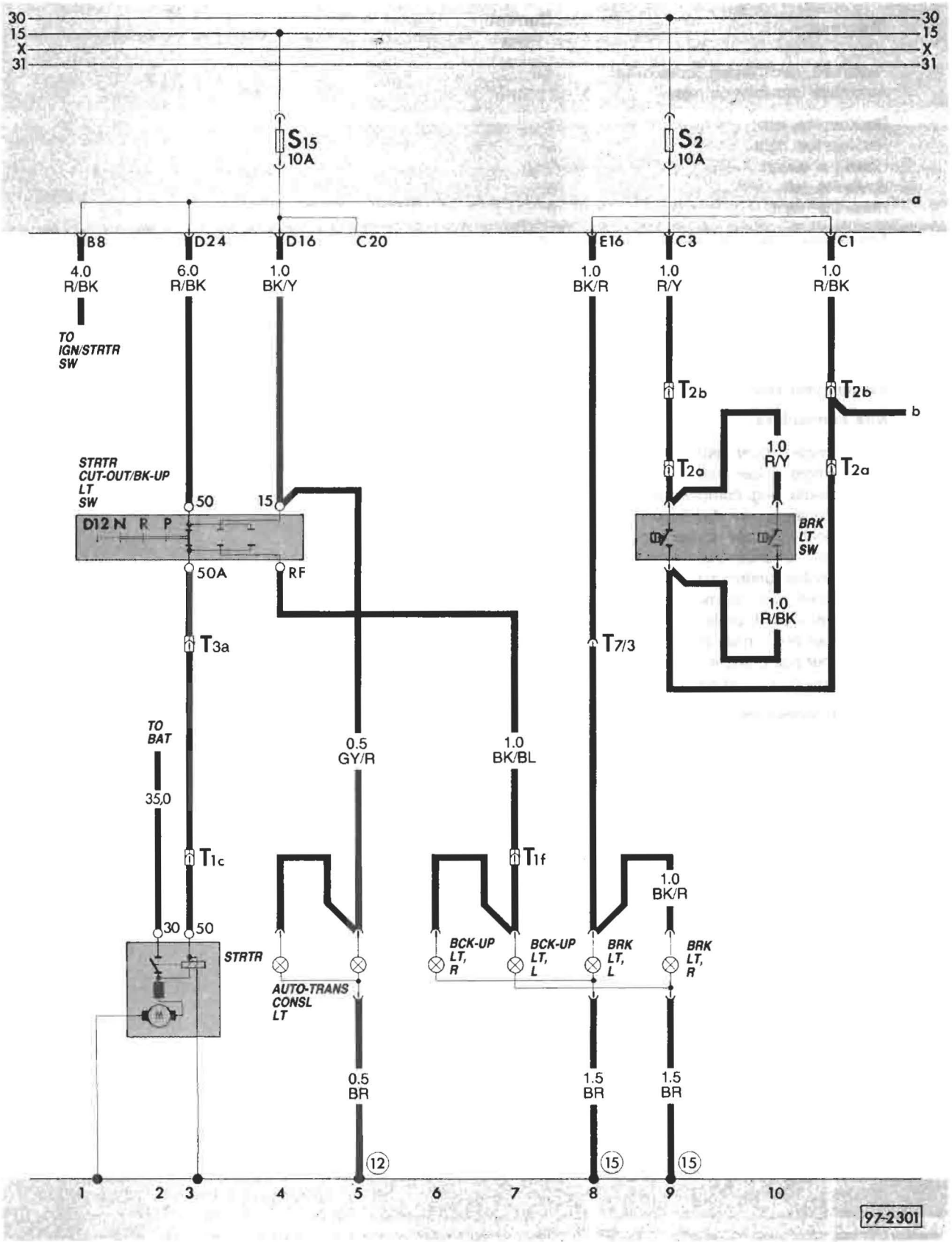
30
15
X
31
S15
10A
S2
10A
a
B8
D24
D16
C20
E16
C3
C1
4.0
R/BK
6.0
R/BK
1.0
BK/Y
1.0
BK/R
1.0
R/Y
1.0
R/BK
TO
IGN/STRTR
SW
T2b
T2a
b
STRTR
CUT-OUT/BK-UP
LT
SW
D12 N R P
50
15
50A
RF
BRK
LT
SW
T3a
T7/3
TO
BAT
35,0
0.5
GY/R
1.0
BK/BL
T1c
T1f
30
50
STRTR
AUTO-TRANS
CONSL
LT
BCK-UP
LT,
R
BCK-UP
LT,
L
BRK
LT,
L
BRK
LT,
R
0.5
BR
1.5
BR
1.5
BR
12
15
15
1
2
3
4
5
6
7
8
9
10
97-2301

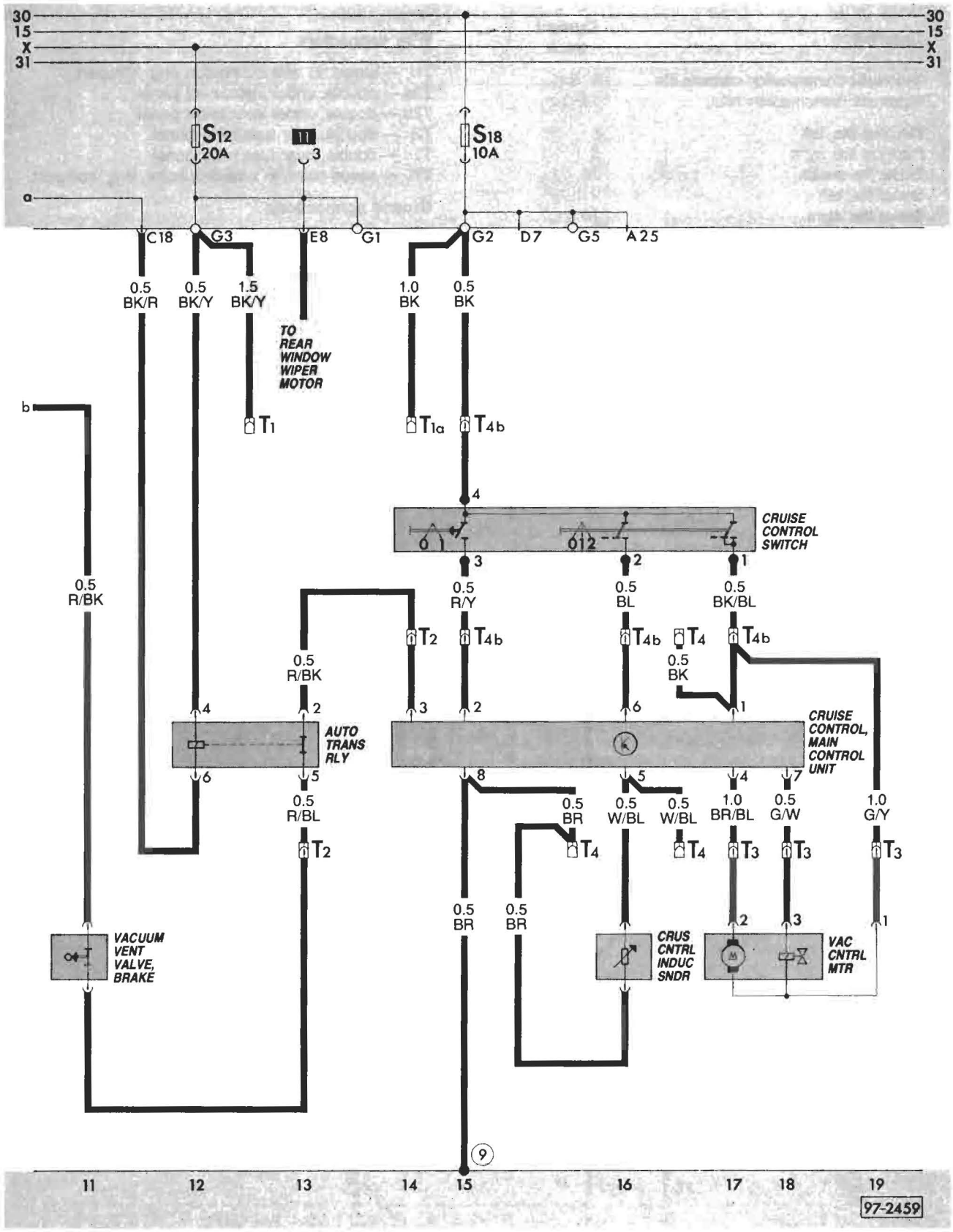
30
15
X
31
S12
20A
S18
10A
C18
G3
E8
G1
G2
D7
G5
A25
0.5 BK/R
0.5 BK/Y
1.5 BK/Y
TO REAR WINDOW WIPER MOTOR
1.0 BK
0.5 BK
T1
T1a
T4b
CRUISE CONTROL SWITCH
0.5 R/BK
0.5 R/Y
0.5 BL
0.5 BK/BL
T2
T4
0.5 BK
AUTO TRANS RLY
CRUISE CONTROL, MAIN CONTROL UNIT
0.5 R/BL
0.5 BR
0.5 W/BL
1.0 BR/BL
0.5 G/W
1.0 G/Y
T3
VACUUM VENT VALVE, BRAKE
CRUS CNTRL INDUC SNDR
VAC CNTRL MTR
11
12
13
14
15
16
17
18
19
97-2459

Description	Current track
Automatic transmission console lite	4, 5
Automatic transmission relay	13, 14
Back-up lite, left	8
Back-up lite, right	6
Brake lite switch	10, 11
Brake lite, left	9
Brake lite, right	10
Cruise control inductive sender	17
Cruise control switch	15-19
Cruise control, main control unit	15-19
Starter	1-3
Starter cut-out/back-up lite switch	1-4
Vacuum control motor	18-21
Vacuum vent valve, brake	12

Wire connectors

T1f — single, in wire distributor, eng. compart.
T2a — double, under instrument panel
T2b — double, under instrument panel
T2j — double, near fuse/relay panel
T2k — double, near fuse/relay panel
T7l — seven point, in wire distributor, eng. compart.

Ground connections

(19) — in engine compart., left
(67) — on left front crossmember

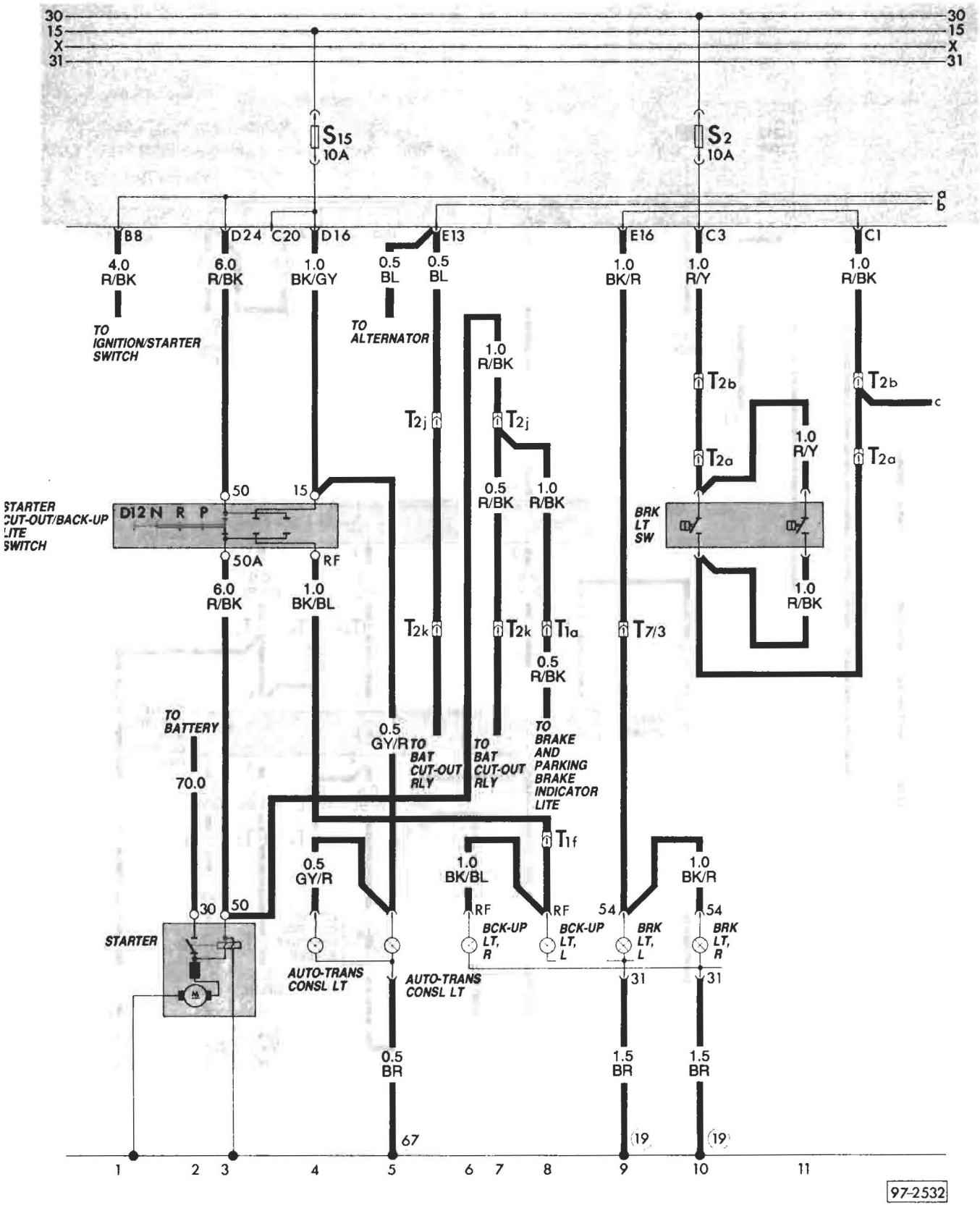
30
15
X
31
S15
10A
S2
10A
a
b
B8
D24
C20
D16
E13
E16
C3
C1
4.0
R/BK
6.0
R/BK
1.0
BK/GY
0.5
BL
0.5
BL
1.0
BK/R
1.0
R/Y
1.0
R/BK
TO
IGNITION/STARTER
SWITCH
TO
ALTERNATOR
1.0
R/BK
T2j
T2j
T2b
T2b
c
T2a
T2a
1.0
R/Y
50
15
STARTER
CUT-OUT/BACK-UP
LITE
SWITCH
D12 N R P
50A
RF
0.5
R/BK
1.0
R/BK
BRK
LT
SW
1.0
R/BK
6.0
R/BK
1.0
BK/BL
T2k
T2k
T1a
T7/3
0.5
R/BK
TO
BATTERY
70.0
0.5
GY/R
TO
BAT
CUT-OUT
RLY
TO
BAT
CUT-OUT
RLY
TO
BRAKE
AND
PARKING
BRAKE
INDICATOR
LITE
T1f
0.5
GY/R
1.0
BK/BL
1.0
BK/R
30
50
RF
RF
54
54
STARTER
BCK-UP
LT,
R
BCK-UP
LT,
L
BRK
LT,
L
BRK
LT,
R
AUTO-TRANS
CONSL LT
AUTO-TRANS
CONSL LT
31
31
0.5
BR
1.5
BR
1.5
BR
67
19
19
1
2
3
4
5
6
7
8
9
10
11
97-2532

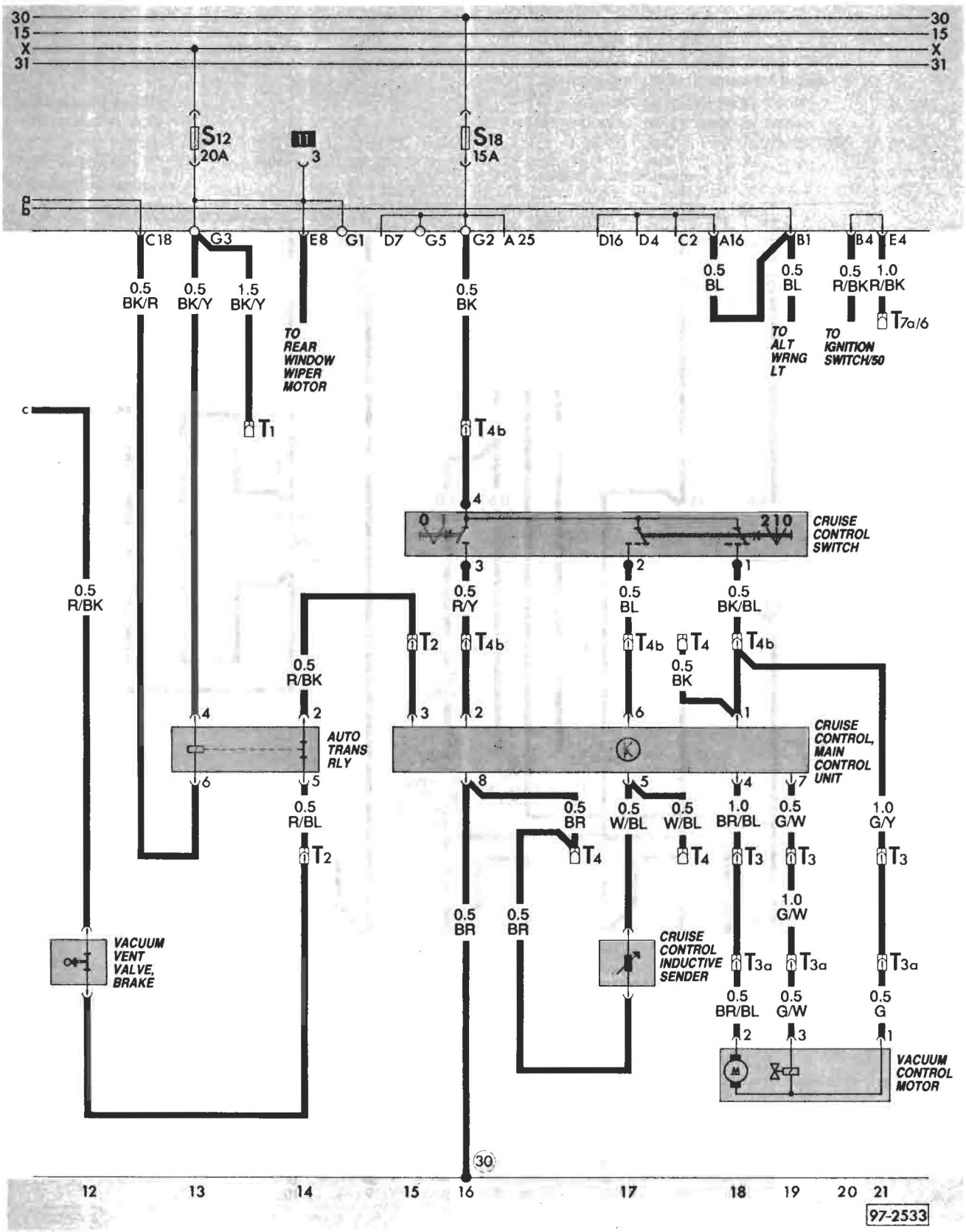
30
15
X
31
S12
20A
S18
15A
C18
G3
E8
G1
D7
G5
G2
A25
D16
D4
C2
A16
B1
B4
E4
0.5 BK/R
0.5 BK/Y
1.5 BK/Y
TO REAR WINDOW WIPER MOTOR
0.5 BK
0.5 BL
TO ALT WRNG LT
0.5 R/BK
1.0 R/BK
T7a/6
TO IGNITION SWITCH/50
T1
T4b
CRUISE CONTROL SWITCH
0.5 R/Y
0.5 BL
0.5 BK/BL
0.5 R/BK
T2
T4
0.5 BK
AUTO TRANS RLY
CRUISE CONTROL, MAIN CONTROL UNIT
0.5 R/BL
0.5 BR
0.5 W/BL
1.0 BR/BL
0.5 G/W
1.0 G/Y
T3
1.0 G/W
T3a
VACUUM VENT VALVE, BRAKE
CRUISE CONTROL INDUCTIVE SENDER
0.5 G
VACUUM CONTROL MOTOR
12
13
14
15
16
17
18
19
20
21
97-2533

Description	Current Track
Brake lite, left	1
Brake lite, right	3
Brake lite, switch	2-3
Cruise control main control	4-9
Cruise control switch	5-9
Inductive sender	6
Vacuum control motor	8-10
Vacuum vent valve, brake pedal	4
Vacuum vent valve, clutch pedal	4

Wire Connectors

T1a — single, under instrument panel
T2 — double, under instrument panel
T3 — three-point, in eng. compart.
T4 — four-point, near cruise control main control
T4b — four-point, under instrument panel
T7/ — seven-point, in wire distributor box

Ground Connections

(14) — under instrument panel

(15) — in eng. compart., under coil

Go to next page

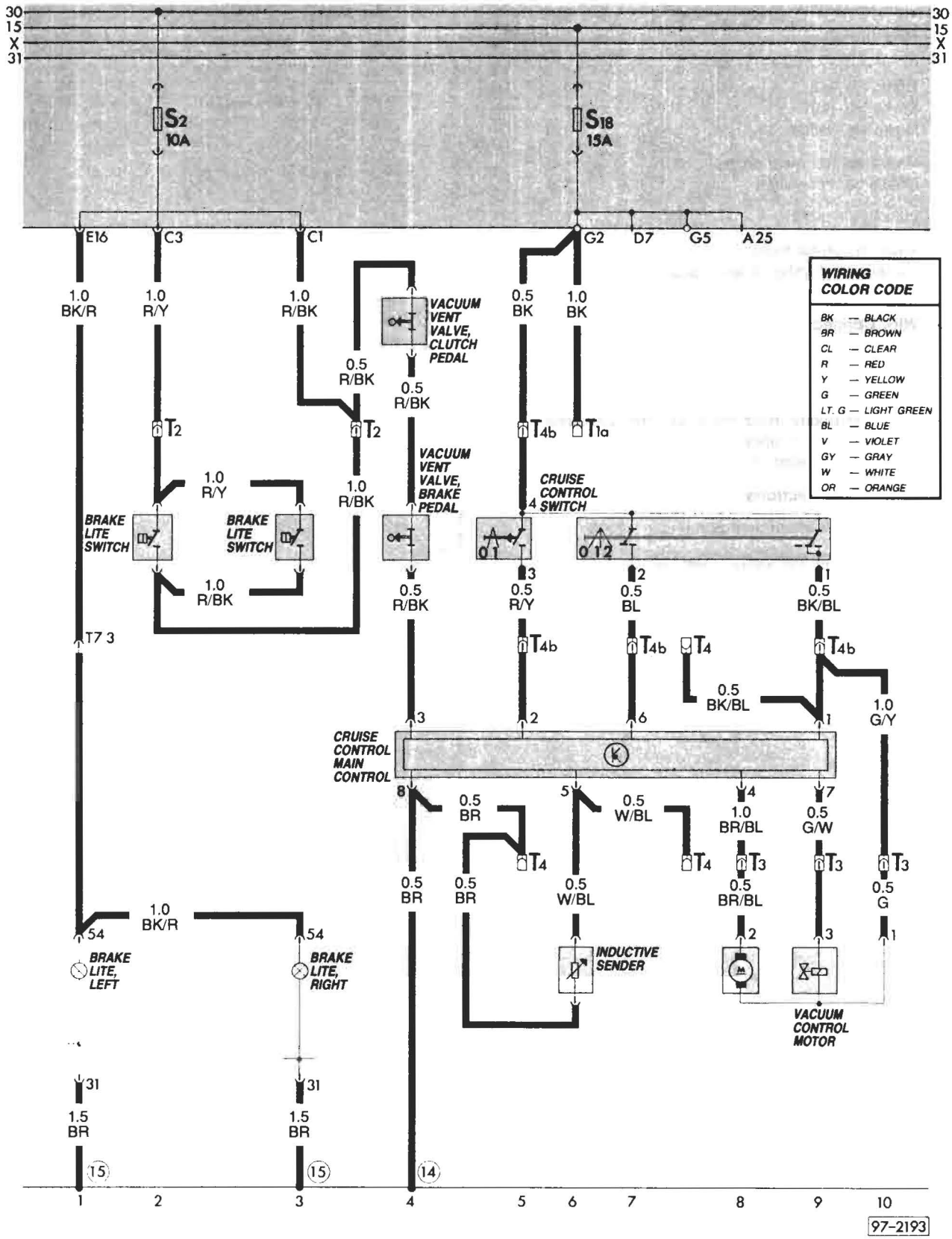
30
15
X
31
S2
10A
S18
15A
E16
C3
C1
G2
D7
G5
A25
1.0 BK/R
1.0 R/Y
1.0 R/BK
0.5 BK
1.0 BK
VACUUM VENT VALVE, CLUTCH PEDAL
0.5 R/BK
T2
T4b
T1a
VACUUM VENT VALVE, BRAKE PEDAL
CRUISE CONTROL SWITCH
BRAKE LITE SWITCH
0.5 R/Y
0.5 BL
0.5 BK/BL
T7 3
T4
1.0 G/Y
CRUISE CONTROL MAIN CONTROL
0.5 BR
0.5 W/BL
1.0 BR/BL
0.5 G/W
0.5 G
INDUCTIVE SENDER
VACUUM CONTROL MOTOR
54
BRAKE LITE, LEFT
BRAKE LITE, RIGHT
31
1.5 BR
15
14
1 2 3 4 5 6 7 8 9 10
97-2193
WIRING COLOR CODE
BK — BLACK
BR — BROWN
CL — CLEAR
R — RED
Y — YELLOW
G — GREEN
LT. G — LIGHT GREEN
BL — BLUE
V — VIOLET
GY — GRAY
W — WHITE
OR — ORANGE

Description	Current track
Brake lite switch	2, 3
Brake lite, left	1
Brake lite, right	3
Cruise control inductive sender	7
Cruise control switch	5-9
Cruise control, main control unit	5-9
Vacuum control motor	8
Vacuum vent valve, brake	4
Vacuum vent valve, clutch	4

Wire connectors

T2 — double, under fuse/relay panel
T3 — three point, near fuse/relay panel
T3a — three point, in wire distributor, eng. compart.
T4 — four point, near cruise control main control unit
T4b — four point, under fuse/relay panel
T7l — seven point, in wire distributor, eng. compart.

Ground connections

(19) — in engine compart., left side
(30) — near fuse/relay panel

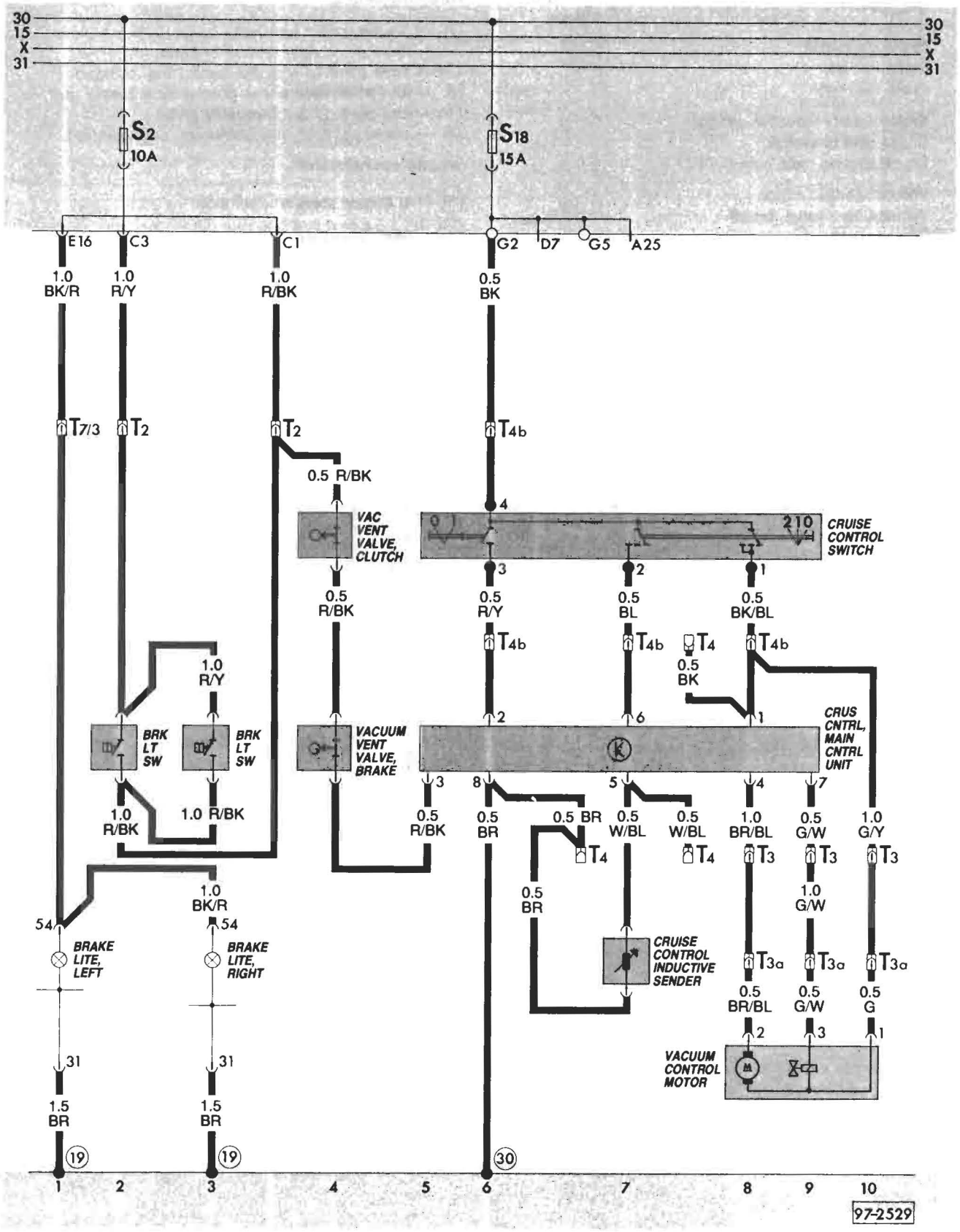
30
15
X
31
S2
10A
S18
15A
E16
C3
C1
G2
D7
G5
A25
1.0 BK/R
1.0 R/Y
1.0 R/BK
0.5 BK
T7/3
T2
T2
T4b
0.5 R/BK
VAC VENT VALVE, CLUTCH
CRUISE CONTROL SWITCH
210
0.5 R/Y
0.5 BL
0.5 BK/BL
T4
0.5 BK
1.0 R/Y
BRK LT SW
BRK LT SW
VACUUM VENT VALVE, BRAKE
CRUS CNTRL, MAIN CNTRL UNIT
1.0 R/BK
1.0 R/BK
0.5 R/BK
0.5 BR
0.5 W/BL
0.5 W/BL
1.0 BR/BL
0.5 G/W
1.0 G/Y
T3
T3a
1.0 BK/R
54
BRAKE LITE, LEFT
BRAKE LITE, RIGHT
CRUISE CONTROL INDUCTIVE SENDER
1.0 G/W
0.5 BR/BL
0.5 G/W
0.5 G
VACUUM CONTROL MOTOR
31
1.5 BR
19
30
1 2 3 4 5 6 7 8 9 10
97-2529

Description	Current track
Differential lock indicator lite	2
Differential lock switch	2

Wire connectors

T3 — three point, under instrument panel
T3a — three point, under inst. panel, near fuse/relay panel

Ground connections

(15) — in eng. compart, under ign. coil

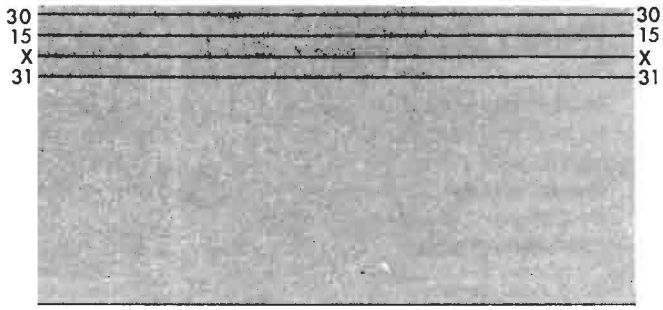

Note

Differential switches on instrument panel are vacuum operated and do not appear on the wiring diagram.

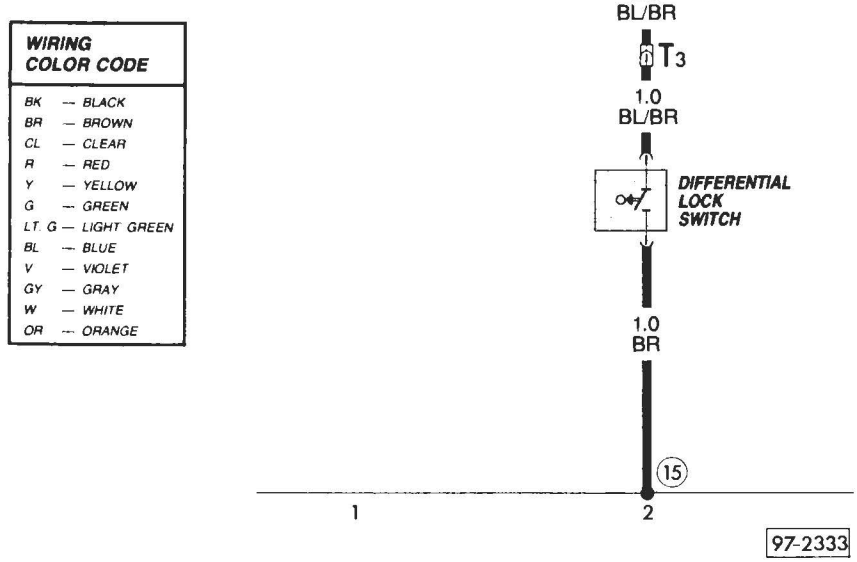

Description	Current Track
Heated seat control unit	1-4
Heated seat indicator lite	5
Heated seat switch	1-2
Heated seat temp. sensor	1
Heat element, backrest	3
Heat element, seat	3

Wire connectors

T1 — single, behind instrument panel
T2 — double, behind instrument panel
T5/ — five-point, behind instrument panel
T6/ — six-point, behind instrument panel

Ground connections

(10) — behind inst. panel, near fuse/relay panel
(11) — behind instrument panel

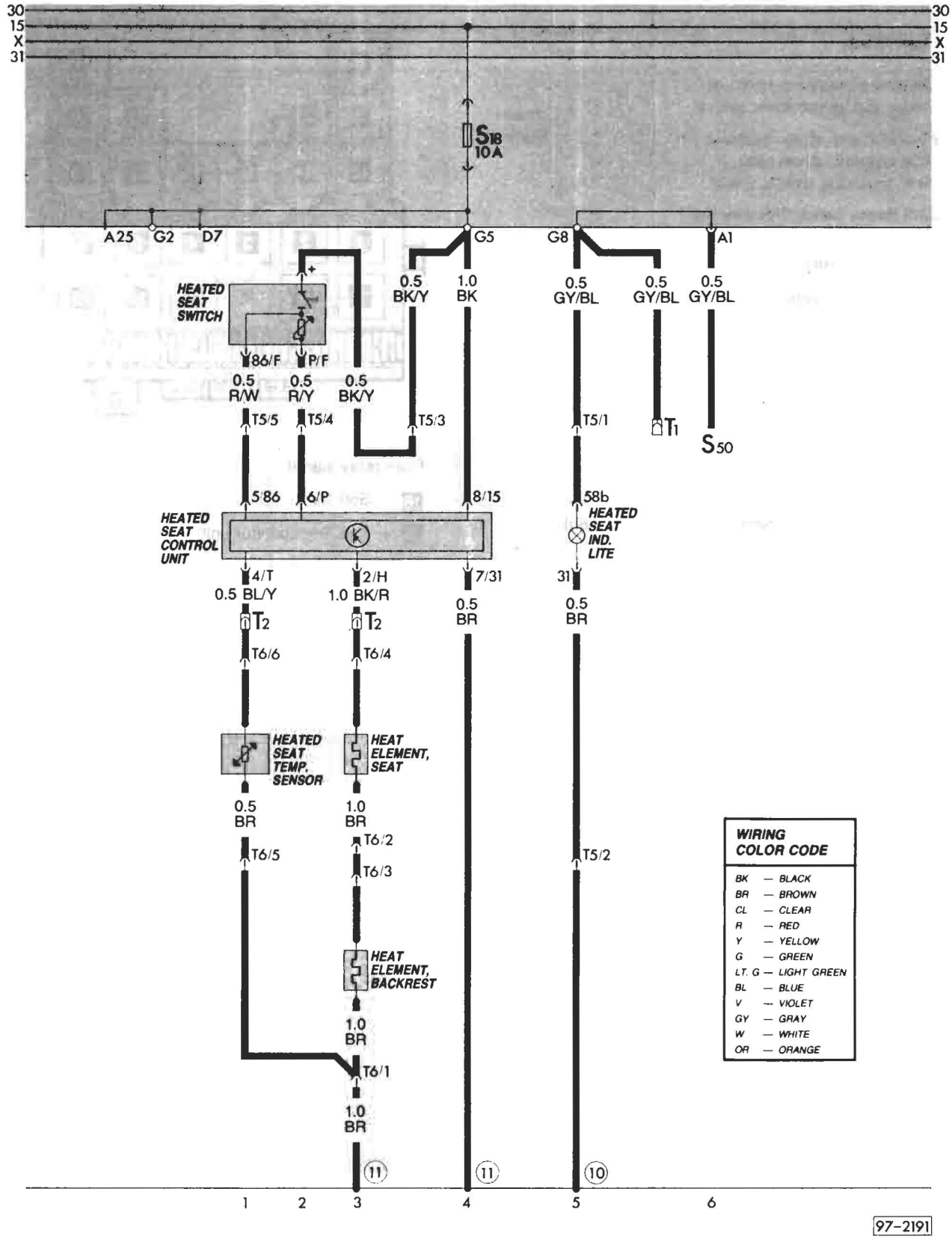
30
15
X
31
S18
10 A
A25
G2
D7
G5
G8
A1
HEATED SEAT SWITCH
86/F
P/F
0.5 R/W
0.5 R/Y
0.5 BK/Y
0.5 BK/Y
1.0 BK
0.5 GY/BL
0.5 GY/BL
0.5 GY/BL
T5/5
T5/4
T5/3
T5/1
T1
S50
5/86
6/P
8/15
58b
HEATED SEAT IND. LITE
HEATED SEAT CONTROL UNIT
4/T
2/H
7/31
31
0.5 BL/Y
1.0 BK/R
0.5 BR
0.5 BR
T2
T2
T6/6
T6/4
HEATED SEAT TEMP. SENSOR
HEAT ELEMENT, SEAT
0.5 BR
1.0 BR
T6/5
T6/2
T6/3
T5/2
HEAT ELEMENT, BACKREST
1.0 BR
T6/1
1.0 BR
11
11
10
1
2
3
4
5
6
WIRING COLOR CODE
BK — BLACK
BR — BROWN
CL — CLEAR
R — RED
Y — YELLOW
G — GREEN
LT. G — LIGHT GREEN
BL — BLUE
V — VIOLET
GY — GRAY
W — WHITE
OR — ORANGE
97-2191

Description	Current track
Driver seat heater control unit	3-6
Driver seat temperature sensor	3
Heat element, driver backrest	5
Heat element, driver seat	4
Heat regulating switch, driver	3,4
Seat heater switch indicator lite	2

Wire connectors

T1 — single, under fuse/relay panel
T1a — single, under fuse/relay panel
T2 — double, under instrument panel
T6 — six-point, under left front seat

Ground connections

(30) — near fuse/relay panel

Plus (+) connections

(A4) — in instrument panel wiring harness (58b)

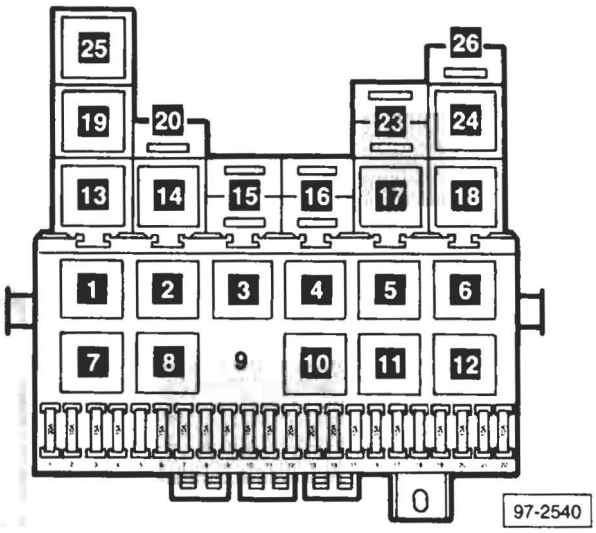

Fuse/relay panel

16 — S50 10A
18 — Seat heat control unit

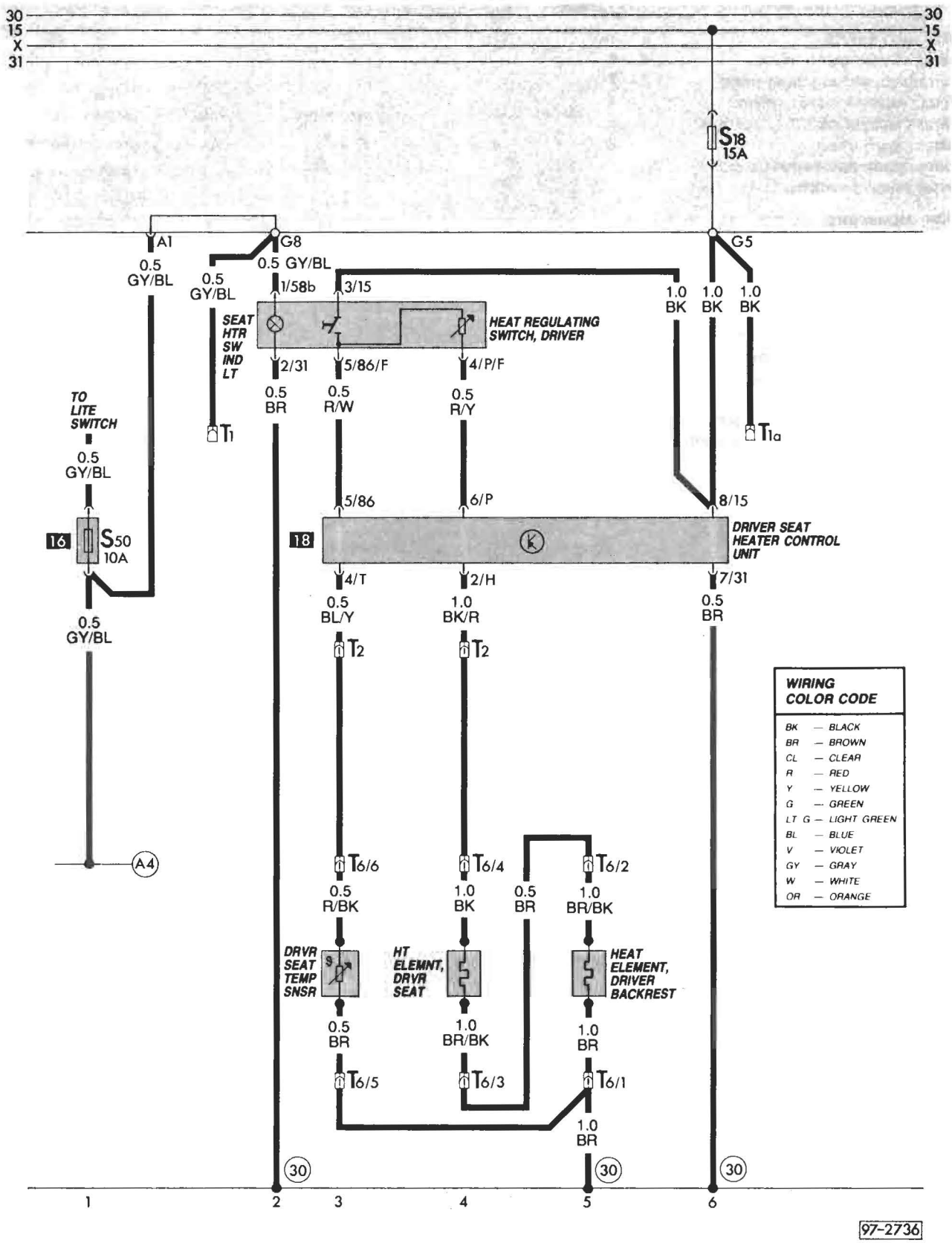
30
15
X
31
S18
15A
A1
G8
G5
0.5 GY/BL
1/58b
3/15
1.0 BK
SEAT HTR SW IND LT
HEAT REGULATING SWITCH, DRIVER
2/31
5/86/F
4/P/F
0.5 BR
0.5 R/W
0.5 R/Y
T1
T1a
TO LITE SWITCH
16
S50
10A
5/86
6/P
8/15
18
DRIVER SEAT HEATER CONTROL UNIT
4/T
2/H
7/31
0.5 BL/Y
1.0 BK/R
T2
A4
T6/6
T6/4
T6/2
0.5 R/BK
1.0 BK
1.0 BR/BK
DRVR SEAT TEMP SNSR
HT ELEMNT, DRVR SEAT
HEAT ELEMENT, DRIVER BACKREST
T6/5
T6/3
T6/1
1.0 BR
WIRING COLOR CODE
BK — BLACK
BR — BROWN
CL — CLEAR
R — RED
Y — YELLOW
G — GREEN
LT G — LIGHT GREEN
BL — BLUE
V — VIOLET
GY — GRAY
W — WHITE
OR — ORANGE
1
2
3
4
5
6
97-2736

Description	Current Track
Mirror adj. switch	1-4
Mirror heat element, driver	6
Mirror heat element, passenger	7
Mirror magnetic clutch, driver	4
Mirror magnetic clutch, passenger	5
Mirror motor, driver	2
Mirror motor, passenger	1
Mirror selector switch	1-2

Wire connectors

T2 — double, in driver door
T2a — double, under instrument panel
T2b — double, under instrument panel
T2c — double, under instrument panel
T2d — double, under instrument panel
T2e — double, in passenger door
T3 — three-point, in passenger door
T3a — three-point, under instrument panel
T3b — three-point, in driver door
T4 — four-point, under instrument panel

Ground connector

(11) — under instrument panel

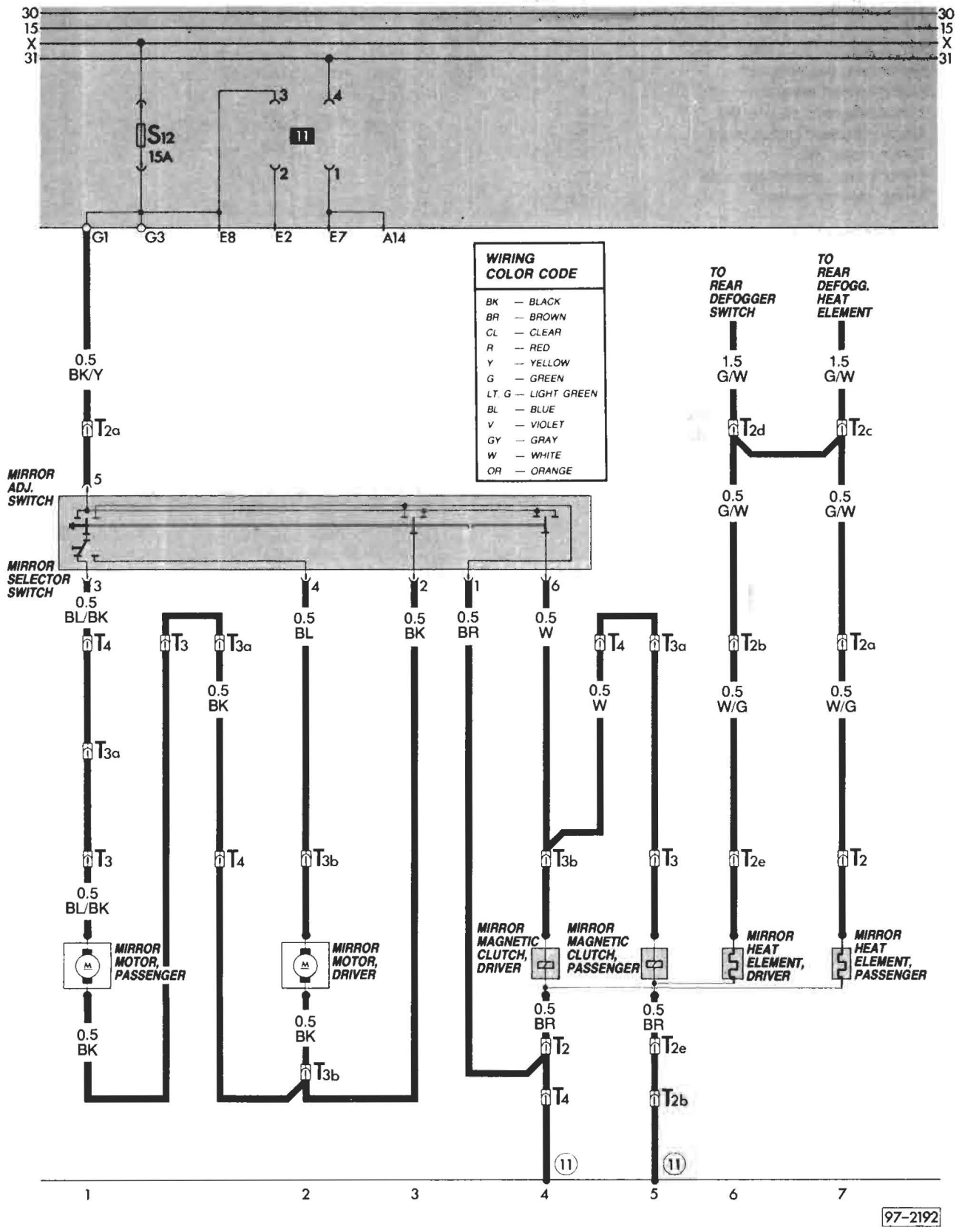
30
15
X
31
S12
15A
11
G1
G3
E8
E2
E7
A14
WIRING COLOR CODE
BK — BLACK
BR — BROWN
CL — CLEAR
R — RED
Y — YELLOW
G — GREEN
LT. G — LIGHT GREEN
BL — BLUE
V — VIOLET
GY — GRAY
W — WHITE
OR — ORANGE
TO REAR DEFOGGER SWITCH
TO REAR DEFOGG. HEAT ELEMENT
MIRROR ADJ. SWITCH
MIRROR SELECTOR SWITCH
MIRROR MOTOR, PASSENGER
MIRROR MOTOR, DRIVER
MIRROR MAGNETIC CLUTCH, DRIVER
MIRROR MAGNETIC CLUTCH, PASSENGER
MIRROR HEAT ELEMENT, DRIVER
MIRROR HEAT ELEMENT, PASSENGER
0.5 BK/Y
1.5 G/W
0.5 G/W
0.5 BL/BK
0.5 BL
0.5 BK
0.5 BR
0.5 W
0.5 W/G
T2a
T2b
T2c
T2d
T2e
T3
T3a
T3b
T4
1
2
3
4
5
6
7
97-2192

Description	Current track
Mirror adjustment switch	1-4
Mirror heat element, left	6
Mirror heated element, right	7
Mirror magnetic clutch, left	4
Mirror magnetic clutch, right	5
Mirror motor, left	2
Mirror motor, passenger side	1
Mirror selector switch	1,2

Wire connectors

T2 — double, in passenger door
T2a — double, under instrument panel
T2b — double, under instrument panel
T2c — double, under instrument panel
T2d — double, under instrument panel
T2e — double, in driver door
T3 — three point, in passenger door
T3a — three point, under instrument panel
T3b — three point, in driver door
T4 — under instrument panel

Ground connections

(11) — under instrument panel

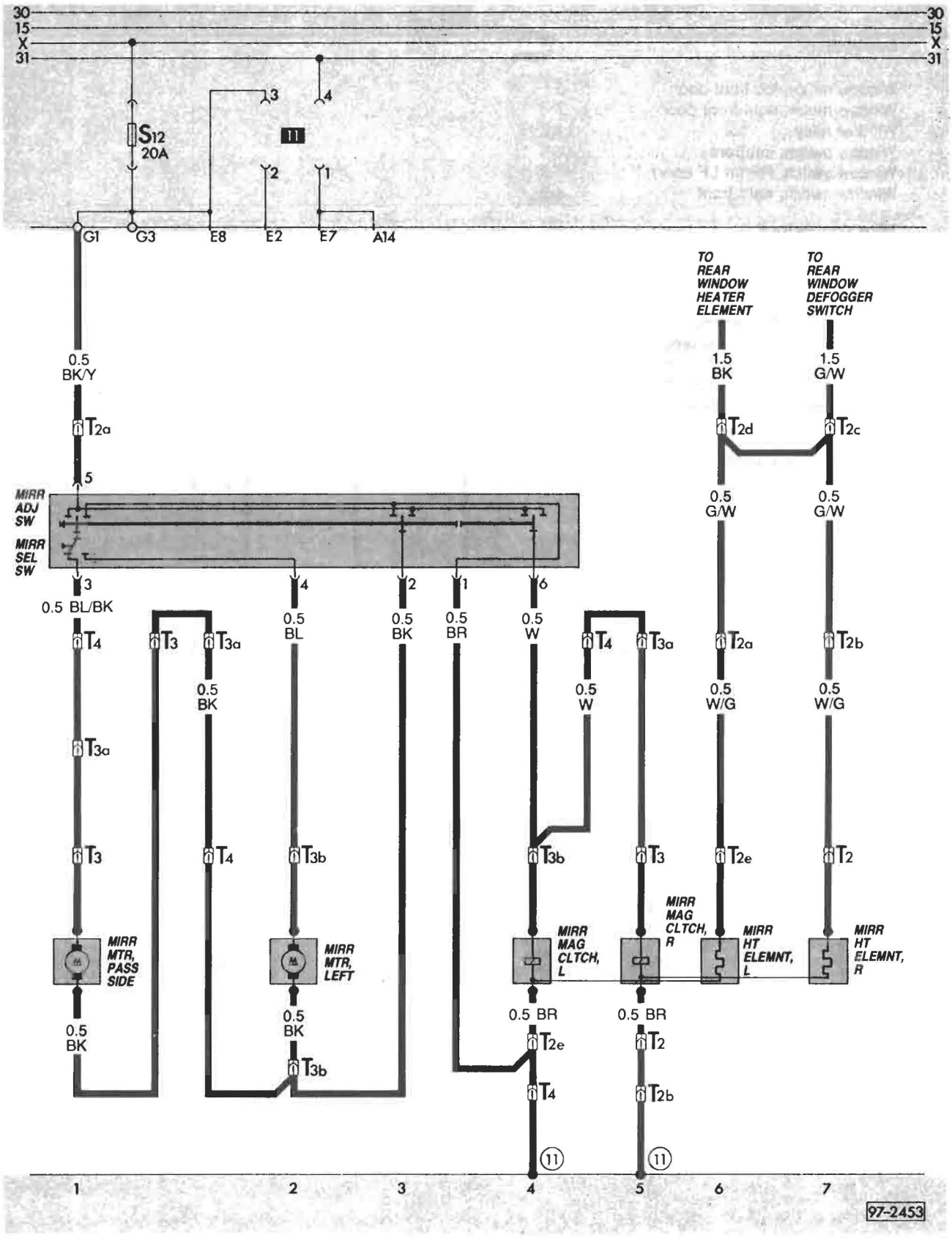

Water-cooled–Digifant from 1986

Power mirrors
from VIN G 105 001

97.186

Description	Current track
Window motor, left front door	3
Window motor, right front door	7
Window relay	1,2
Window switch, left front	2-5
Window switch, RF (in LF door)	6-9
Window switch, right front	6-9

Wire connectors

T1 — single, under fuse/relay panel
T2a — double, in driver door
T2b — double, in driver door
T2c — double, in passenger door
T3a — three-point, in passenger door
T3b — three-point, in driver door
T3c — three-point, in driver door
T3d — three point, in driver door
T3e — three point, in passenger door

Ground connections

(10) — near fuse/relay panel

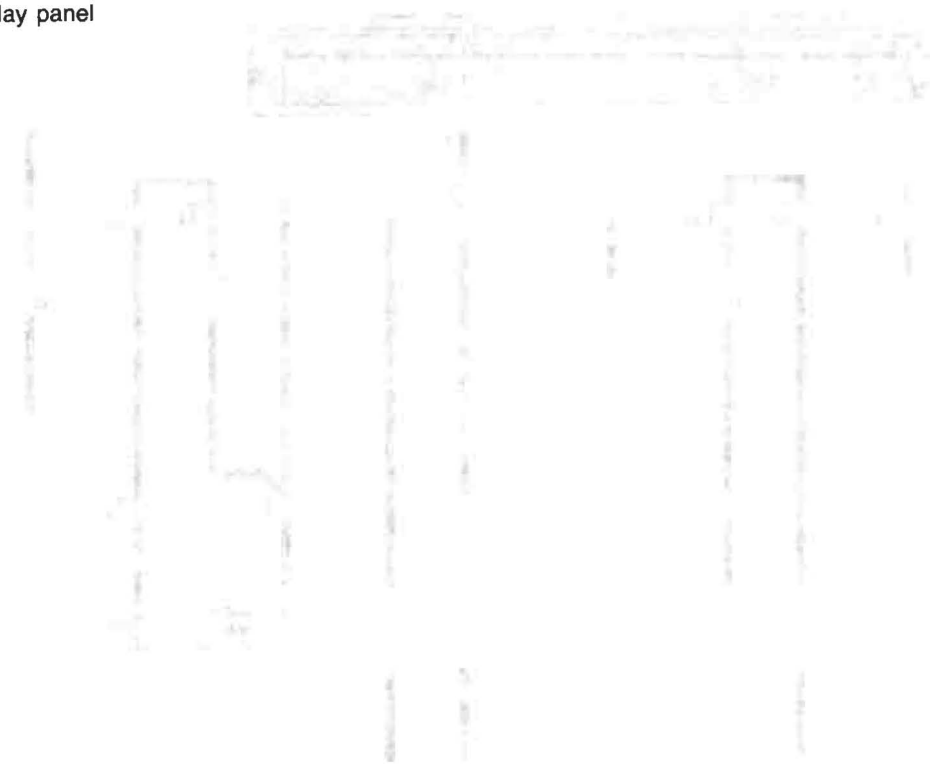

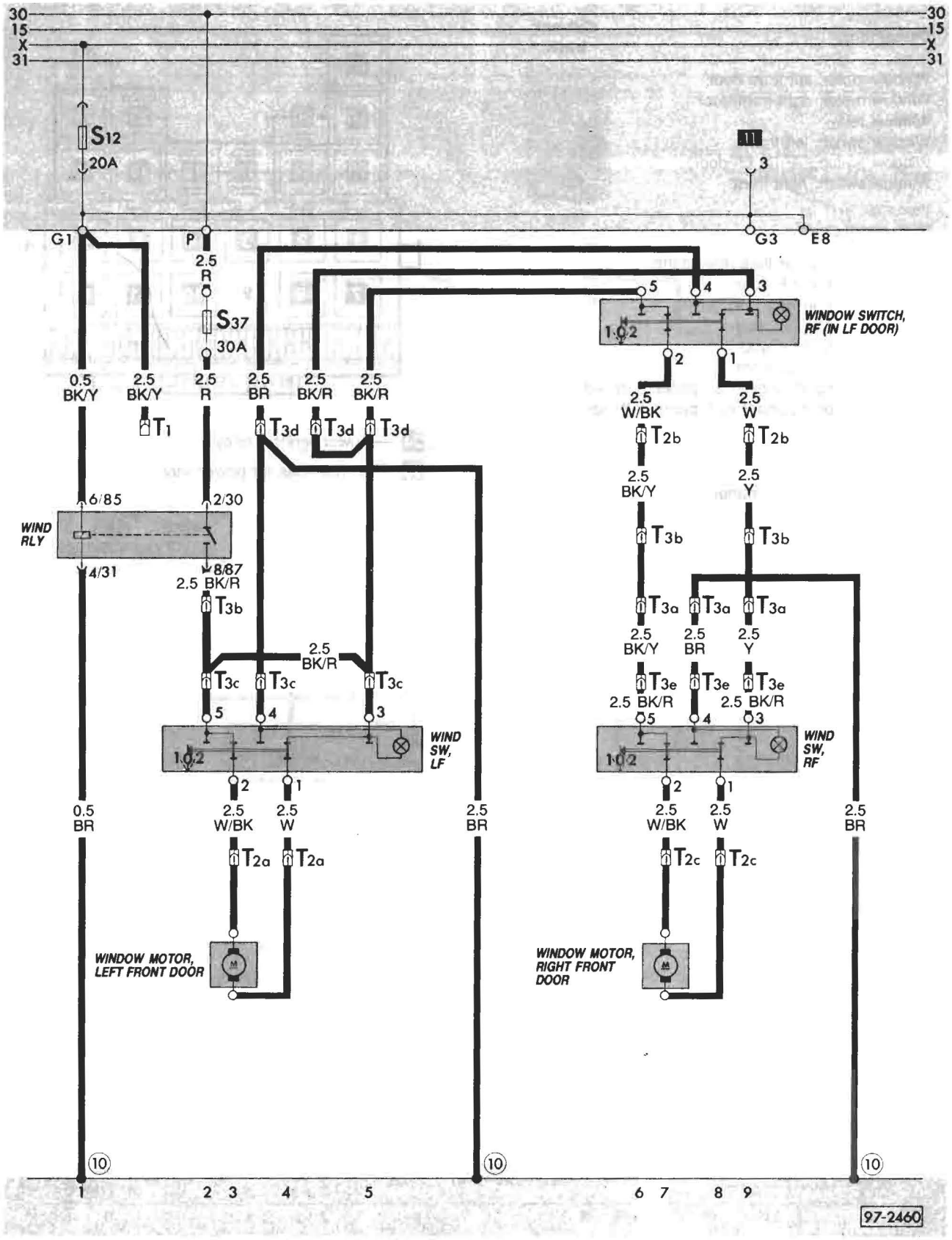
30
15
X
31
S12
20A
S37
30A
G1
P
G3
E8
WINDOW SWITCH, RF (IN LF DOOR)
WIND RLY
WIND SW, LF
WIND SW, RF
WINDOW MOTOR, LEFT FRONT DOOR
WINDOW MOTOR, RIGHT FRONT DOOR
0.5 BK/Y
2.5 BK/Y
2.5 R
2.5 BR
2.5 BK/R
2.5 W/BK
2.5 W
2.5 Y
0.5 BR
6/85
2/30
4/31
8/87
T1
T2a
T2b
T2c
T3a
T3b
T3c
T3d
T3e
1.0.2
97-2460

Description	Current track
Window motor, left front door	4
Window motor, right front door	9
Window relay	1,2
Window switch, left front	3-6
Window switch, RF (in LF door)	7-12
Window switch, right front	7-12

Wire connectors

T1 — single, under fuse/relay panel
T2a — double, in LF door
T2b — double, in RF door
T2c — double, in RF door
T2d — double, in LF door
T2e — double, in LF door
T3a — three-point, under inst. panel, right side
T3b — three-point, under inst. panel, left side
T3e — three point, in RF door

Ground connection

(30) — near fuse/relay panel

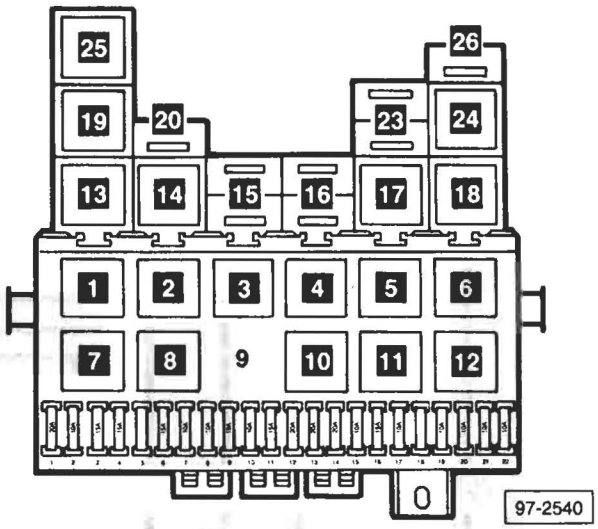

24 — power window relay
26 — thermo fuse for power windows

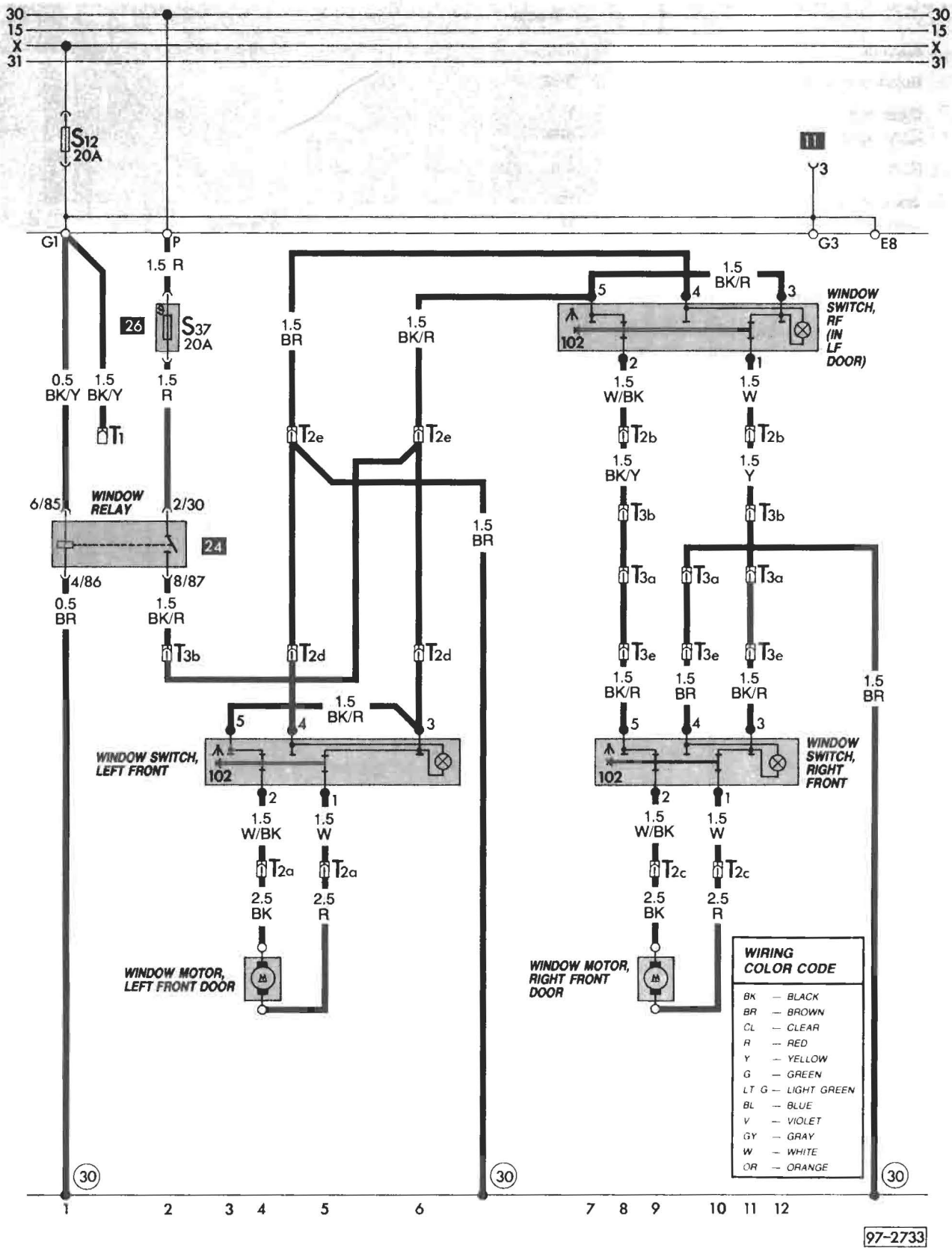
30
15
X
31
S12
20A
11
3
G1
P
G3
E8
1.5 R
26
S37
20A
0.5
BK/Y
1.5
BK/Y
1.5
R
T1
6/85
WINDOW
RELAY
2/30
24
4/86
8/87
0.5
BR
1.5
BK/R
T3b
1.5
BR
1.5
BK/R
T2e
T2e
T2d
T2d
1.5
BR
5
4
3
WINDOW SWITCH,
LEFT FRONT
102
2
1
1.5
W/BK
1.5
W
T2a
T2a
2.5
BK
2.5
R
WINDOW MOTOR,
LEFT FRONT DOOR
1.5
BK/R
5
4
3
WINDOW
SWITCH,
RF
(IN
LF
DOOR)
102
2
1
1.5
W/BK
1.5
W
T2b
T2b
1.5
BK/Y
1.5
Y
T3b
T3b
T3a
T3a
T3a
T3e
T3e
T3e
1.5
BK/R
1.5
BR
1.5
BK/R
1.5
BR
5
4
3
WINDOW
SWITCH,
RIGHT
FRONT
102
2
1
1.5
W/BK
1.5
W
T2c
T2c
2.5
BK
2.5
R
WINDOW MOTOR,
RIGHT FRONT
DOOR
WIRING
COLOR CODE
BK — BLACK
BR — BROWN
CL — CLEAR
R — RED
Y — YELLOW
G — GREEN
LT G — LIGHT GREEN
BL — BLUE
V — VIOLET
GY — GRAY
W — WHITE
OR — ORANGE
30
30
30
1
2
3
4
5
6
7
8
9
10
11
12
97-2733

Description	Current Track
Antenna	3
Balance control	9-12
Cigar lighter	1
Cigar lighter lite	5-6
Radio	4-8
Speaker, LF	12
Speaker, LR	11
Speaker, RF	9
Speaker, RR	10

Wire connectors

T2 — double, behind instrument panel
T2a — double, behind instrument panel
T2b — double, behind instrument panel
T2c — double, behind instrument panel
T3 — three-point, behind instrument panel

Ground connections

(19) — in balance control wiring harness

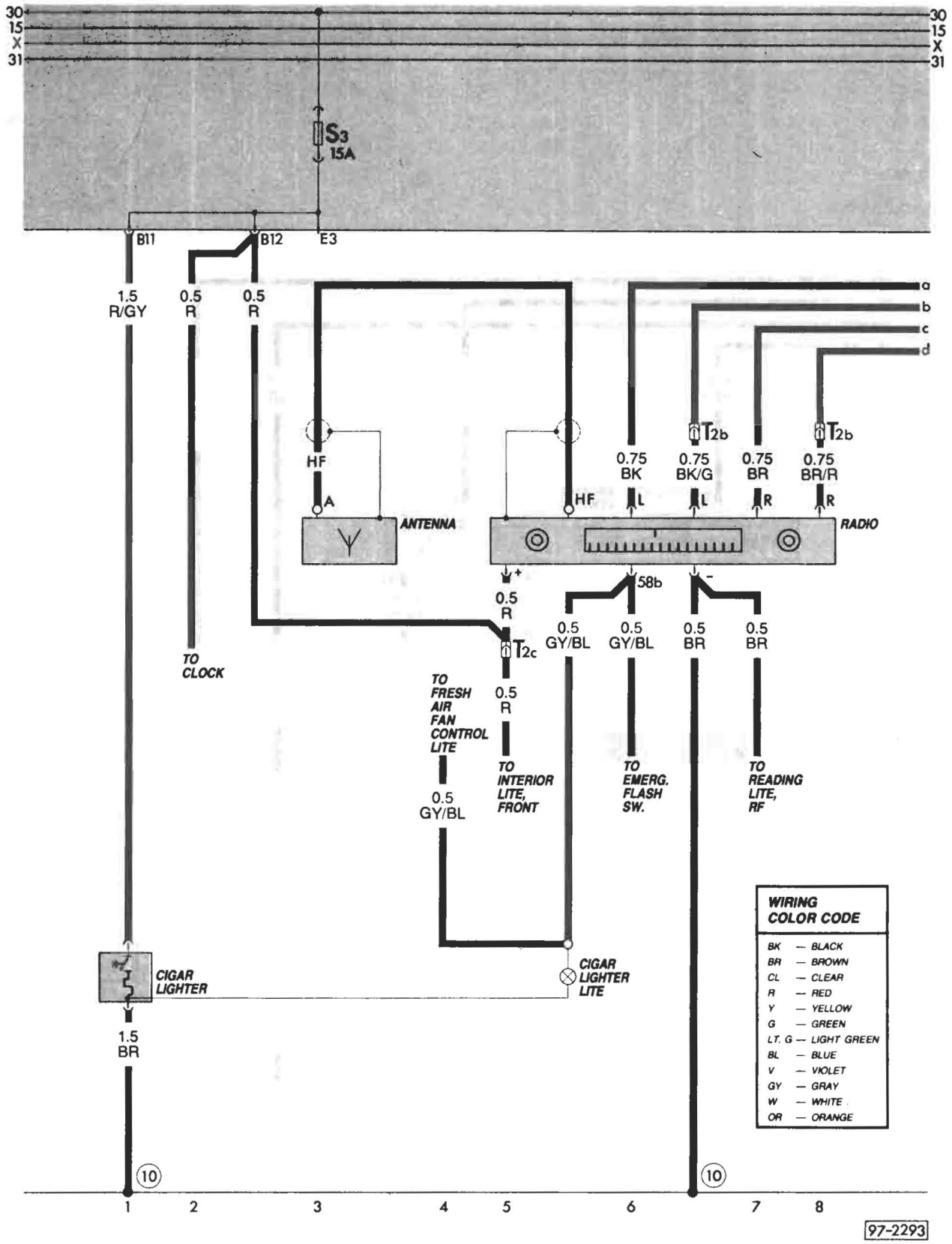
30
15
X
31
S3
15A
B11
B12
E3
1.5
R/GY
0.5
R
0.5
R
HF
A
ANTENNA
HF
0.75
BK
0.75
BK/G
0.75
BR
0.75
BR/R
T2b
T2b
a
b
c
d
L
L
R
R
RADIO
+
-
58b
0.5
R
T2c
0.5
GY/BL
0.5
GY/BL
0.5
BR
0.5
BR
TO
CLOCK
TO
FRESH
AIR
FAN
CONTROL
LITE
0.5
R
TO
INTERIOR
LITE,
FRONT
0.5
GY/BL
TO
EMERG.
FLASH
SW.
TO
READING
LITE,
RF
CIGAR
LIGHTER
CIGAR
LIGHTER
LITE
1.5
BR
10
10
1
2
3
4
5
6
7
8
97-2293
WIRING
COLOR CODE
BK — BLACK
BR — BROWN
CL — CLEAR
R — RED
Y — YELLOW
G — GREEN
LT. G — LIGHT GREEN
BL — BLUE
V — VIOLET
GY — GRAY
W — WHITE
OR — ORANGE

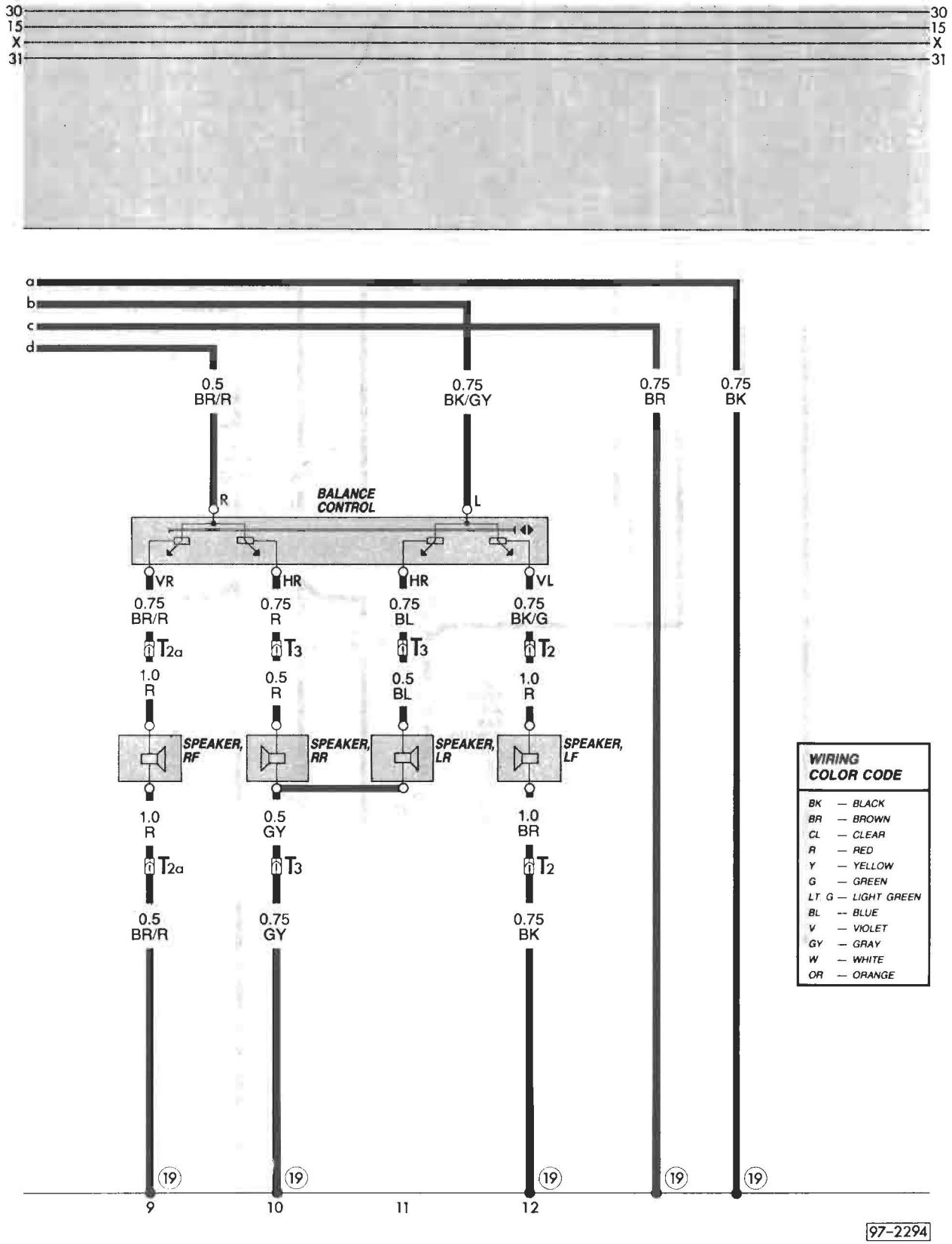
30
15
X
31
30
15
X
31
a
b
c
d
0.5
BR/R
0.75
BK/GY
0.75
BR
0.75
BK
R
BALANCE
CONTROL
L
VR
HR
HR
VL
0.75
BR/R
0.75
R
0.75
BL
0.75
BK/G
T2a
T3
T3
T2
1.0
R
0.5
R
0.5
BL
1.0
R
SPEAKER,
RF
SPEAKER,
RR
SPEAKER,
LR
SPEAKER,
LF
1.0
R
0.5
GY
1.0
BR
T2a
T3
T2
0.5
BR/R
0.75
GY
0.75
BK
19
19
19
19
19
9
10
11
12
WIRING
COLOR CODE
BK — BLACK
BR — BROWN
CL — CLEAR
R — RED
Y — YELLOW
G — GREEN
LT. G — LIGHT GREEN
BL — BLUE
V — VIOLET
GY — GRAY
W — WHITE
OR — ORANGE
97-2294

Rear footwell heater blower

Description	Current track
Fuse S10	1
Series resistance	2
Warm air blower	1
Warm air blower switch	1-2

Wire connectors

T4 — 4-point, under rear bench seat

Ground connectors

(14) — under rear bench seat

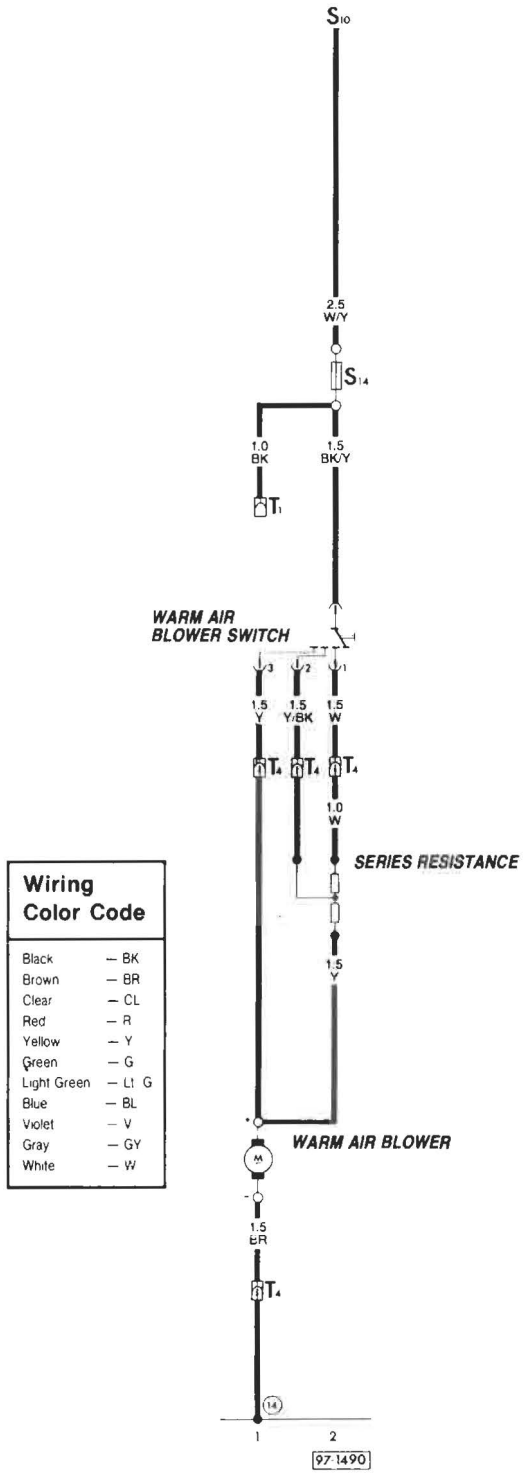

Wiring Color Code

Black	— BK
Brown	— BR
Clear	— CL
Red	— R
Yellow	— Y
Green	— G
Light Green	— Lt G
Blue	— BL
Violet	— V
Gray	— GY
White	— W

Description	Current track
Antenna	3
Map/reading lite, right front	8
Radio	1-8
Speaker, left front	2
Speaker, left rear	6
Speaker, right front	3
Speaker, right rear	7

Wire connectors

T2a — double, under instrument panel, left
T2b — double, under instrument panel, right
T2c — double, under instrument panel, left
T4 — four point, under instrument panel
T8 — eight point, back of radio, middle
T8a — eight point, back of radio, bottom
T14 — fourteen point, under instrument panel

Ground connections

(81) — in instrument panel wiring harness

Welded wire connections

(A4) — plus (+) connection 586 in inst. panel wire harness

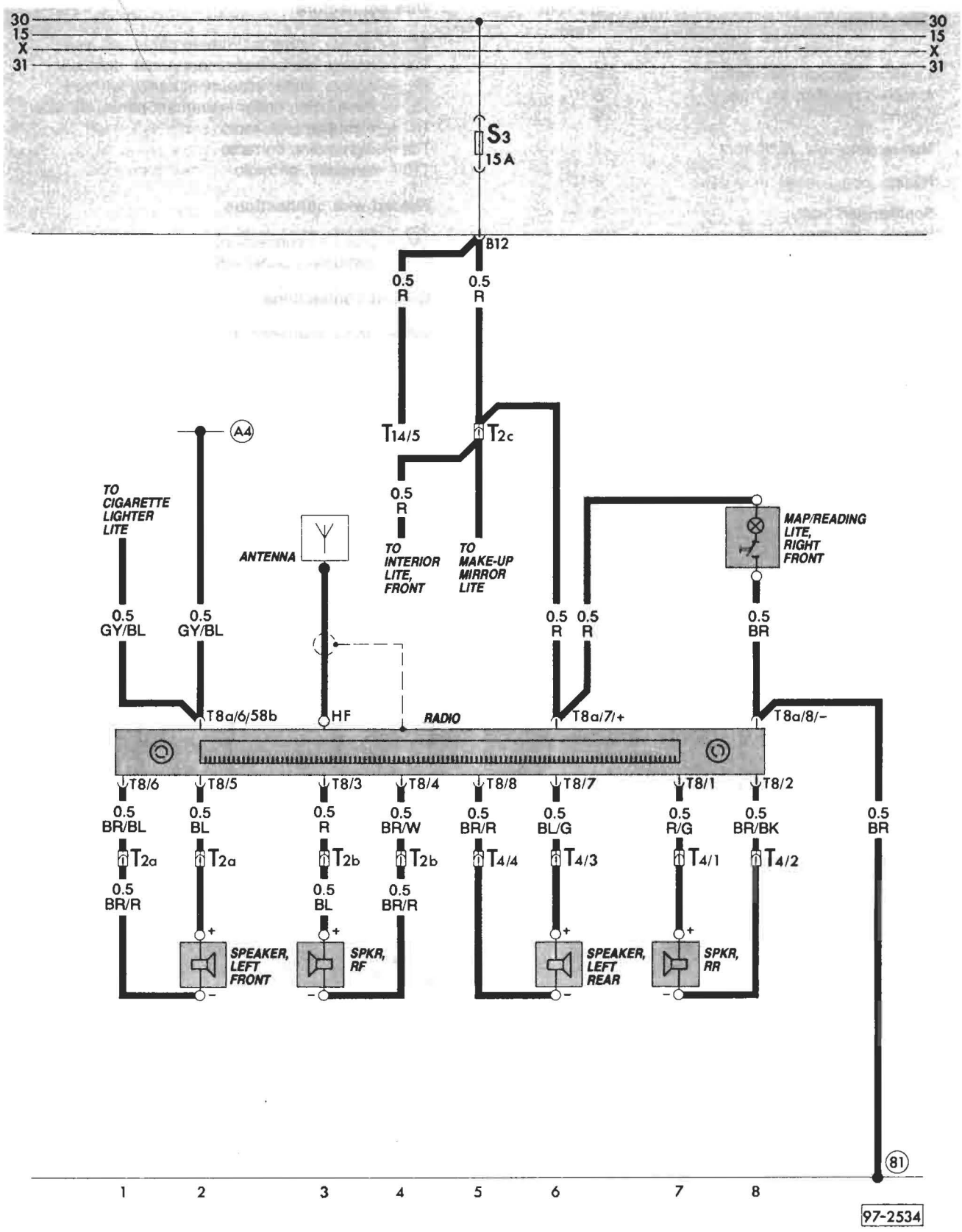
30
15
X
31
S3
15A
B12
0.5 R
0.5 R
T14/5
T2c
A4
TO CIGARETTE LIGHTER LITE
ANTENNA
TO INTERIOR LITE, FRONT
TO MAKE-UP MIRROR LITE
MAP/READING LITE, RIGHT FRONT
0.5 GY/BL
0.5 GY/BL
0.5 R
0.5 R
0.5 BR
T8a/6/58b
HF
RADIO
T8a/7/+
T8a/8/-
T8/6
T8/5
T8/3
T8/4
T8/8
T8/7
T8/1
T8/2
0.5 BR/BL
0.5 BL
0.5 R
0.5 BR/W
0.5 BR/R
0.5 BL/G
0.5 R/G
0.5 BR/BK
0.5 BR
T2a
T2a
T2b
T2b
T4/4
T4/3
T4/1
T4/2
0.5 BR/R
0.5 BL
0.5 BR/R
SPEAKER, LEFT FRONT
SPKR, RF
SPEAKER, LEFT REAR
SPKR, RR
81
1
2
3
4
5
6
7
8
97-2534

Description	Current track
Amplified speaker, left center	8-9
Amplified speaker, left front	8-10
Antenna	9
Map/reading light, right front	11
Radio	2-10
Speaker, left front	3
Speaker, left rear	6
Speaker, right front	4
Speaker, right rear	7

Wire connectors

T2 — double, under instrument panel, left side
T2a — double, under instrument panel, right side
T2c — double, under instrument panel, left side
T3 — three-point, under instrument panel, left side
T8 — eight-point, on radio
T8a — eight-point, on radio
T10 — ten-point, on radio

Welded wire connections

(A4) — plus (+) connection, terminal 58b in instrument panel wiring harness

Ground connections

(45) — under instrument panel, middle

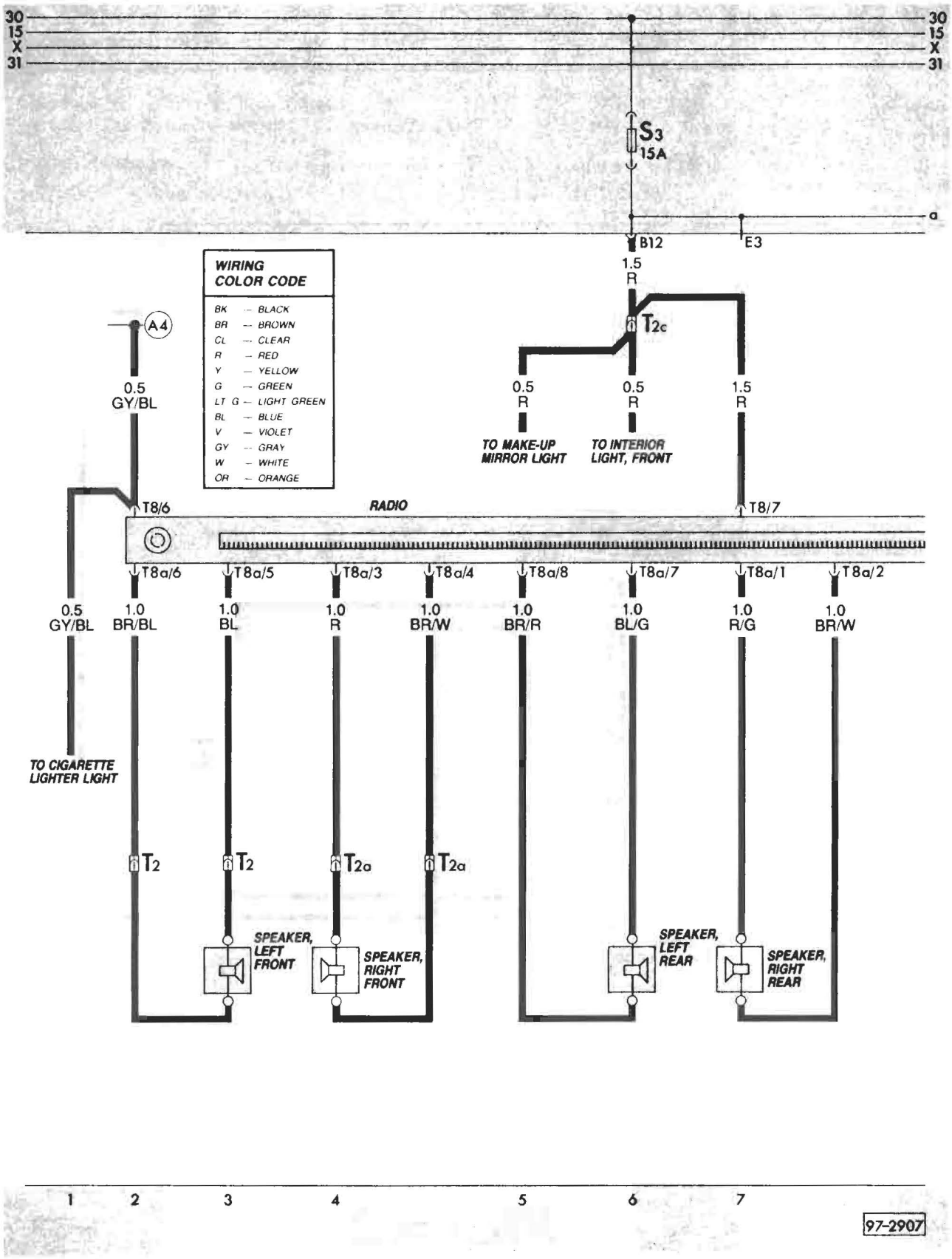

Water-cooled–Digifant from 1988

Stereo radio with amplified speakers

97.198

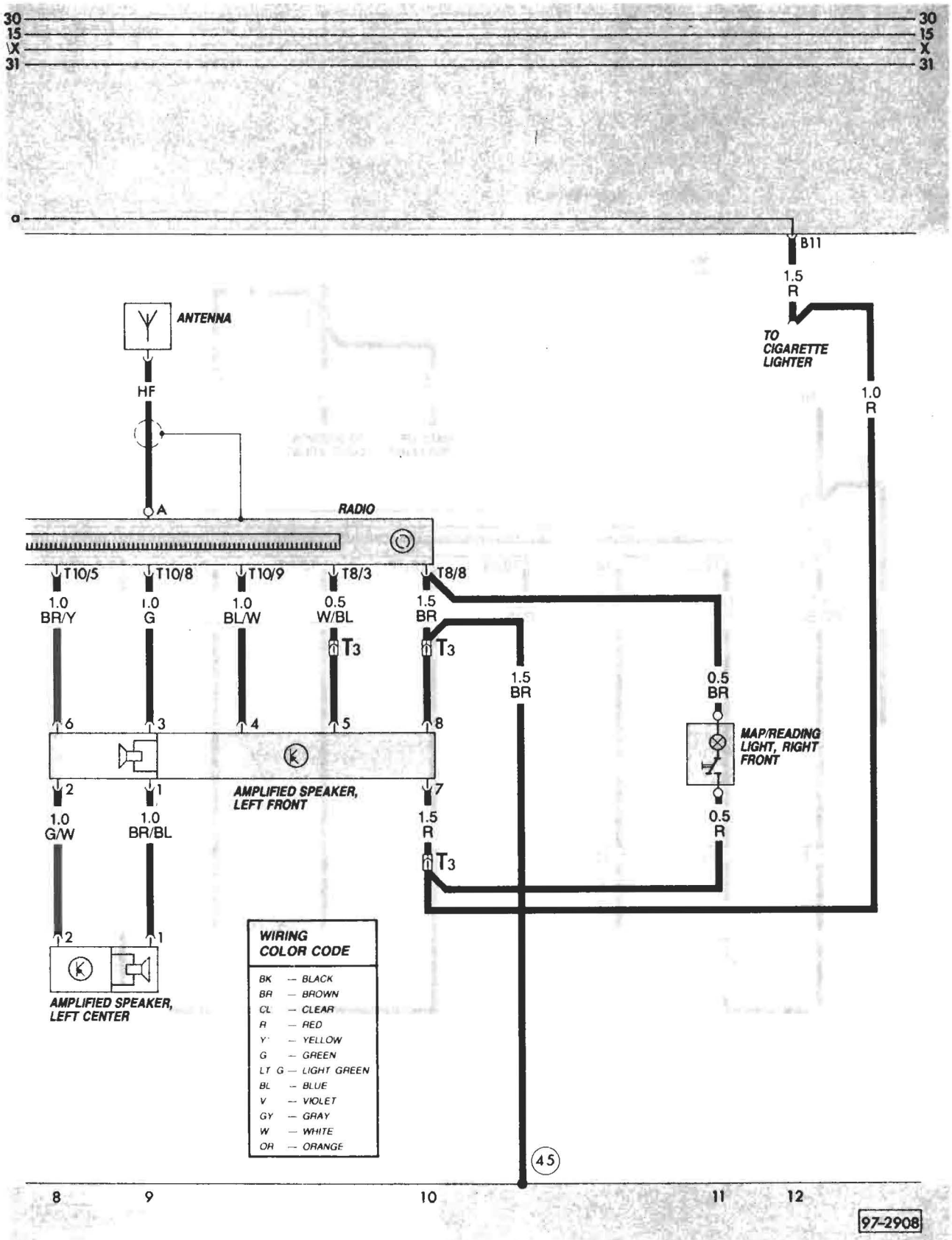

97.199 Stereo radio with amplified speakers

Water-cooled–Digifant from 1988

Description	Current track
Radiator cooling fan	1
Radiator cooling fan after run series resistance	1
Radiator cooling fan relay (2nd stage)	2-4
Radiator cooling fan thermoswitch	1,2

Wire connectors

T1 — single, under fuse/relay panel
T1a — single, under instrument panel
T2 — double, under instrument panel

(+) connectors

(21) — terminal 30, in wire distributor in eng. compart.

Ground connectors

(10) — near fuse/relay panel

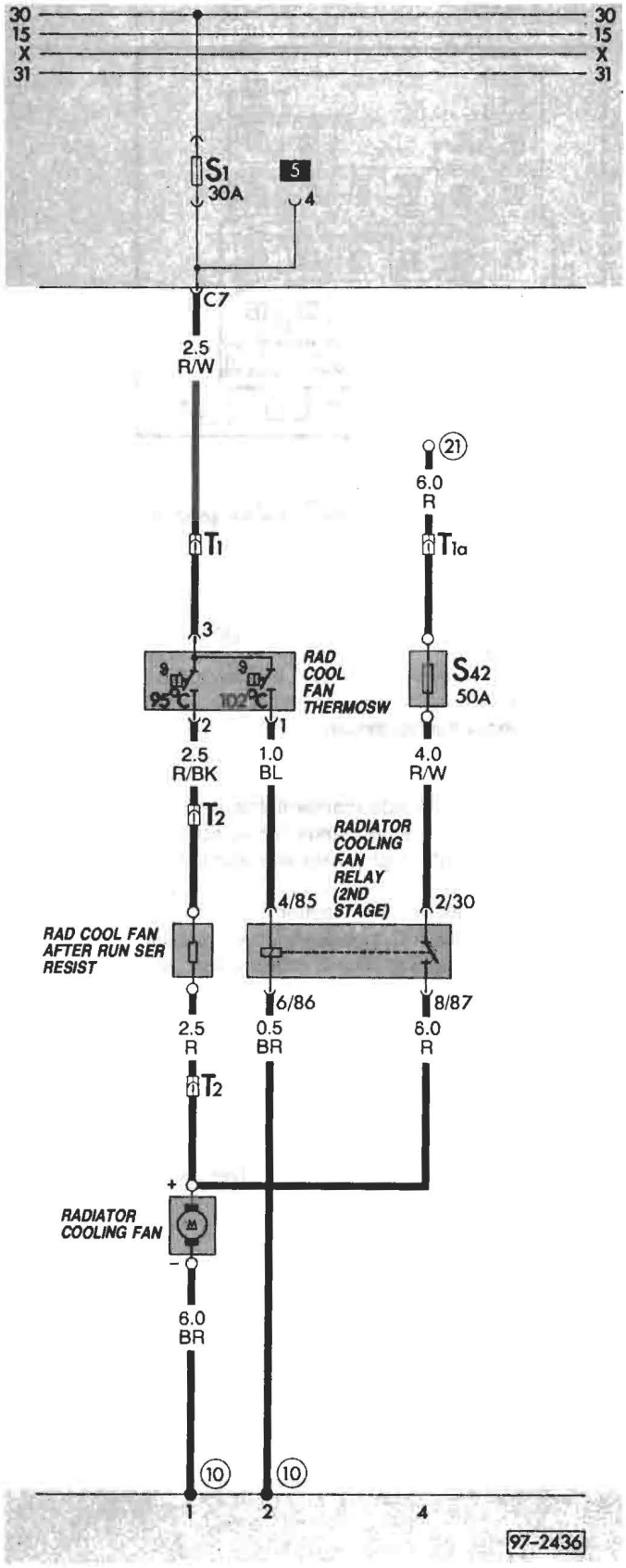

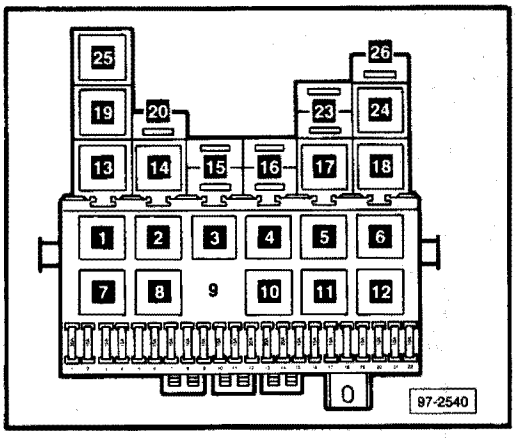

Fuse arrangement

according to numbers on fuse panel as seen from left to right:

		Amp.
1	Radiator cooling fan	30
2	Brake lights	15
3	Cigarette lighter, radio, clock, interior lights, illuminated make-up mirror	15
4	Emergency flasher system	15
5	Open	
6	Open	
7	Tail, parking and side marker lights, left	10
8	Tail, parking and side marker lights, right	10
9	High beam right, high beam indicator light	10
10	High beam left	10
11	Windshield wipers and washer	15
12	Cruise control, A/C, power windows, auxiliary heater fresh air fan, power mirrors, rear window wiper	20
13	Fresh air fan	20
14	Rear window defogger	20
15	Back-up lights	10
16	Horn	15
17	Windshield wipers	10
18	Seat belt warning relay, brake and park brake indicator, cruise control, heated driver's seat	10
19	Turn signals	10
20	License plate lights	10
21	Low beam left	10
22	Low beam right	10

Fuse/relay panel

3 — Low coolant level control unit (43)*, J120
5 — Rad. cool. fan relay 2nd stage (53)*, J101
8 — Load reduction relay (18)*, J59
10 — Intermittent wash/wiper relay (19)*, J31
11 — Rear window wash/wiper relay (72),* J30
12 — Emerg. flash/turn sig. relay (21)*, J2
19 — Seat belt warning system control unit, J34

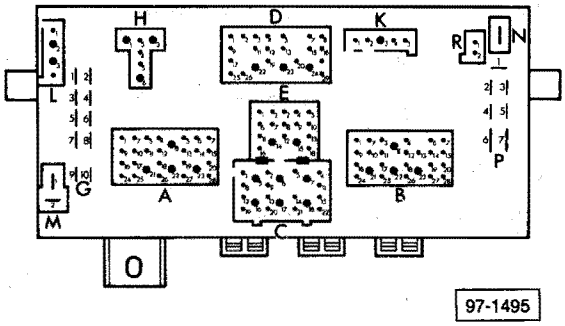

Connections and plugs on fuse/relay panel

A — multi-point connector (blue) for instrument panel wiring harness
B — multi-point connector (red) for instrument panel wiring harness
C — multi-point connector (yellow) for front wiring harness
D — multi-point connector (white) for windshield wiper and main wiring harness
E — multi-point connector (black) for main wiring harness
G — single connector
H — multi-point connector (brown) to connector for rad. cool. fan relay, 2nd stage
K — multi-point connector (colorless) to radiator coolant low-level control unit
L — multi-point connector (gray) for horns
M — open
N — single connector
P — single connector (terminal 30)
R — open

*Numbers in parentheses indicate production control number stamped on relay housing.

Description	Current Track
Air flow sensor potentiometer, G19	24
Alternator, C	5
Alternator warning light, K2	54
Back-up light switch, F4	128
Back-up light, left, M16	128
Back-up light, right, M17	129
Battery, A	1
Brake and parking brake indicator light, K7	136
Brake fluid level warning contact, F34	137
Brake light switch, F	125-126
Brake light, left, M9	127
Brake light, right, M10	126
Cigarette lighter, U1	74
Cigarette lighter light, L28	75
Clock light, L8	64
Coolant low level control unit, J120	70-71
Coolant low level sensor, G32	70
Coolant overheat warning light, K28	69
Coolant temperature gauge, G3	68
Coolant temperature sensor, G62	21
Coolant temperature sending unit, G2	72
Digifant control unit, J169	16-29
Digifant control unit relay, J176	34-37
Digital clock, Y2	56
Door contact switch, left front, F2	81-82
Door contact switch, right front, F3	84
Emergency flasher relay, J2	114-115
Emergency flasher switch, E3	112-120
Emergency flasher warning light, K6	120
Engine oil pressure control unit, J114	58-59
Engine oil pressure switch (0.3 bar), F22	51
Engine oil pressure switch (1.8 bar), F1	50
Engine oil pressure warning light, K3	60
Fresh air blower series resistance, N23	143
Fresh air control lever light, L16	141
Fresh air fan, V2	142
Fresh air fan switch, E9	142-143
Fuel gauge, G1	67
Fuel gauge sending unit, G	73
Fuel pump, G6	33
Fuel pump relay, J17	32-33
Fuse, S5	21
Fuse, S51	12
Fuse, S3	82
Fuse, S7	82
Fuse, S8	94
Fuse, S20	98
Fuse, S10	100
Fuse, S21	101
Fuse, S22	109

Description	Current Track
Fuse, S9	110
Fuse, S19	112
Fuse, S4	113
Fuse, S2	126
Fuse, S15	128
Fuse, S16	131
Fuse, S18	134
Fuse, S6	138
Fuse, S14	140
Fuse, S13	143
Fuse, S1	144
Fuse, S11	153
Fuse, S17	154
Fuse, S12	164
Hall generator, G40	17-19
Headlight dimmer/flasher switch, E4	104-105
Headlight high beam warning light, K1	66
Headlight, left, L1	99
Headlight, left, L1	101
Headlight, right, L2	109
Headlight, right, L2	111
Heater blower series resistance, N72	151-152
Heater fan switch illumination light, L50	148
Heating element (crankcase ventilation), N79	12
High-beam headlight, left, L13	100
High-beam headlight, right, L14	110
Horn button, H	130
Horns, H1	131
Idle stabilizer control unit, J142	39-45
Idle stabilizer valve, N71	43-44
Ignition coil, N	14
Ignition distributor, O	13-15
Ignition/starter switch, D	8-11
Injector, cyl. 1, N30	29
Injector, cyl. 2, N31	30
Injector, cyl. 3, N32	31
Injector, cyl. 4, N33	32
Instrument panel light, L10	61-63
Instrument panel light dimmer switch, E20	96
Intake air temperature sensor, G42	23
Interior light, front, W	81-82
License plate light, X	97-98
Light switch, E1	88-96
Load reduction relay, J59	89-91
Make-up mirror light, right, W14	80
Map/reading light, right front, W13	78
Overheat fuse, S24	150-151
Oxygen sensor, G39	27-28

Description	Current Track
Parking brake warning light switch, F9	136
Parking light, left, M1	102
Parking light, right, M3	108
Power steering pressure switch, F88	39-40
Radiator cooling fan, V7	144
Radiator cooling fan relay (2nd stage), J101	146-149
Radiator cooling fan thermoswitch, F18	144-145
Reading light, behind driver's seat, W22	83-84
Reading light, left rear, W11	85-86
Rear window defogger indicator light, K10	139
Rear window defogger switch, E15	138-140
Rear window defogger switch light, L39	138
Rear window heater element, Z1	140
Rear window washer pump, V13	160
Rear window wiper motor, V12	162-163
Rear window wiper/washer relay, J30	161-162
Seat belt switch, left, E24	133
Seat belt warning light, K19	135
Seat belt warning system control unit, J34	132-135
Side marker lights, rear, M12	105,106
Spark plug connectors, P	13-15
Spark plugs, Q	13-15
Starter, B	3-4
T.D.C. sensor, G7	46-47
Tachometer, G5	57
Tail light, left, M4	103
Tail light, right, M2	107
Throttle valve switch (enrichment), F25	20
Turn signal indicator light, K5	65
Turn signal light, left front, M5	122
Turn signal light, left rear, M6	121
Turn signal light, right front, M7	124
Turn signal light, right rear, M8	123
Turn signal switch, E2	116-117
Voltage regulator, C1	5
Voltage stabilizer, J6	67
Warm air blower, V47	149
Warm air blower switch, E100	150-152
Washer/wiper intermittent relay, J31	156-158
Windshield washer pump, V5	159
Windshield wiper motor, V	153-154
Windshield-wiper intermittent switch, E22	155-158

Wire connectors

T1 — single, under instrument panel, left side
T1a — single, above left rear window
T1d — single, in wire distributor box, engine compartment
T1e — single, under instrument panel, left side
T1g — single, in wire distributor box, engine compartment
T1h — single, engine compartment, left side
T1i — single, under instrument panel
T1k — single, engine compartment, left
T1m— single, near relay panel, engine compartment
T1n — single, near relay panel, engine compartment
T1o — single, under instrument panel, left side
T2c — double, under instrument panel, left side
T2d — double, upper right 'A' pillar
T2e — double, in rear deck lid, near wiper motor
T2f — double, on upper right 'C' pillar, behind cover
T2g — double, under instrument panel, left side
T2i — double, in wire distributor box, engine compartment
T2k — double, in engine compartment, left
T2m— double, near relay panel, engine compartment
T2o — double, near driver's seat belt buckle
T2x — double, in engine compartment, middle
T3 — three-point, near alternator
T3a — three-point, behind instrument panel, right side
T3b — three-point, behind instrument panel, left side
T3d — three-point, behind front grille
T3x — three-point, under instrument panel, left side
T7 — seven-point, in wire distributor box, engine compartment
T7a — seven-point, in wire distributor box, engine compartment
T8 — engine-point, under instrument panel, middle
T14 — fourteen-point, on instrument cluster

Ground connections

(1) — battery to body
(2) — transmission to body
(12) — in engine compartment, left
(18) — on engine block
(23) — ground wire, above steering gear
(29) — near fuel gauge sending unit
(30) — near relay panel
(45) — under instrument panel, middle
(52) — in rear decklid, left
(53) — in rear decklid, right
(56) — near rear washer bottle holder
(58) — near rear window wiper motor
(79) — near rear decklid opening
(81) — ground connection, instrument panel wiring harness
(94) — ground connection, in Digifant wiring harness

Welded wiring connections

(A4) — plus (+), terminal 58b, in instrument panel wiring harness
(G1) — plus (+), in Digifant wiring harness
(G2) — in Digifant wiring harness
(P1) — plus (+) 30 terminal, in wire distributor box, engine compartment

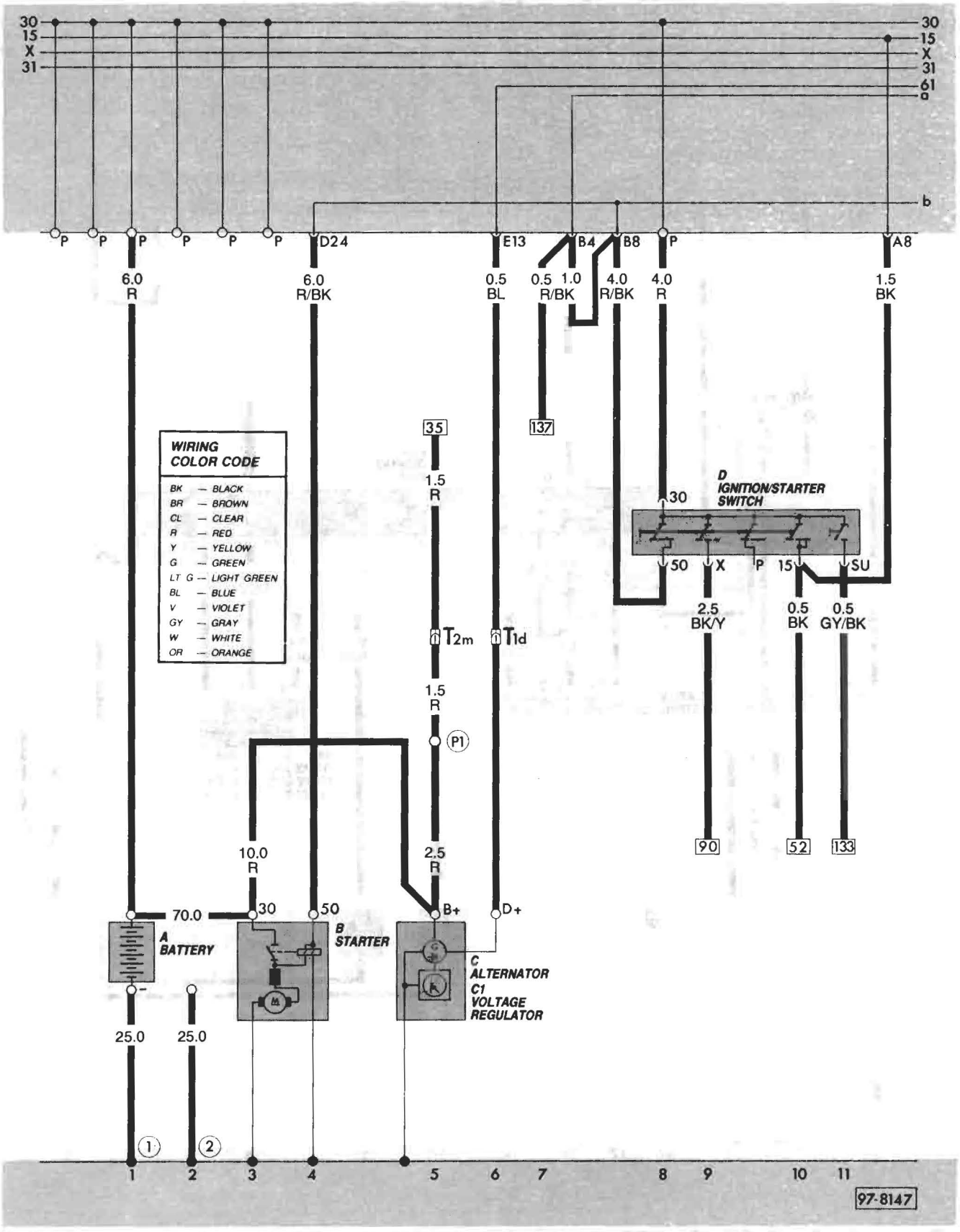

Water-cooled–Digifant from 1990

Main wiring diagram **97.204**

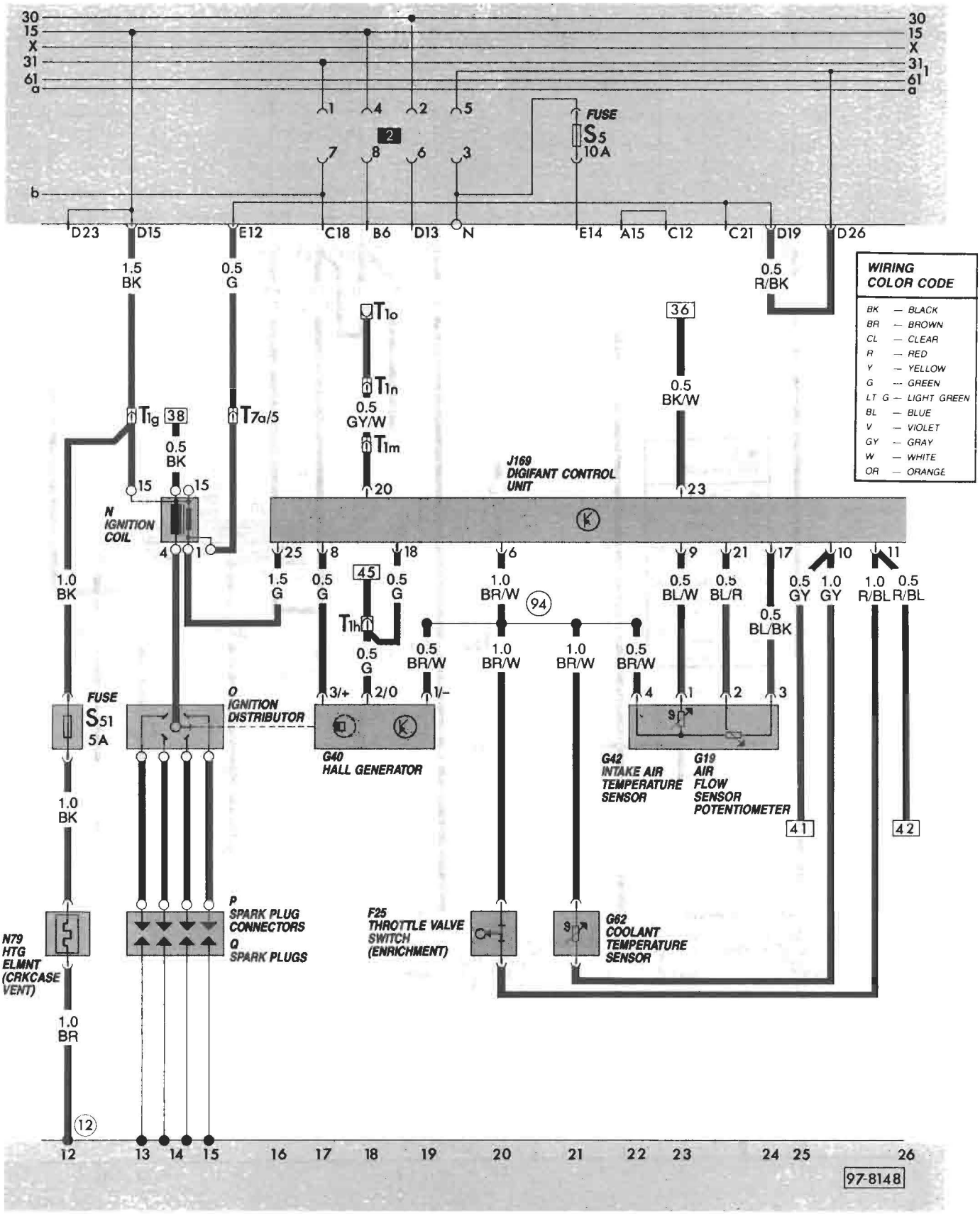

97.205 Main wiring diagram

Water-cooled–Digifant from 1990

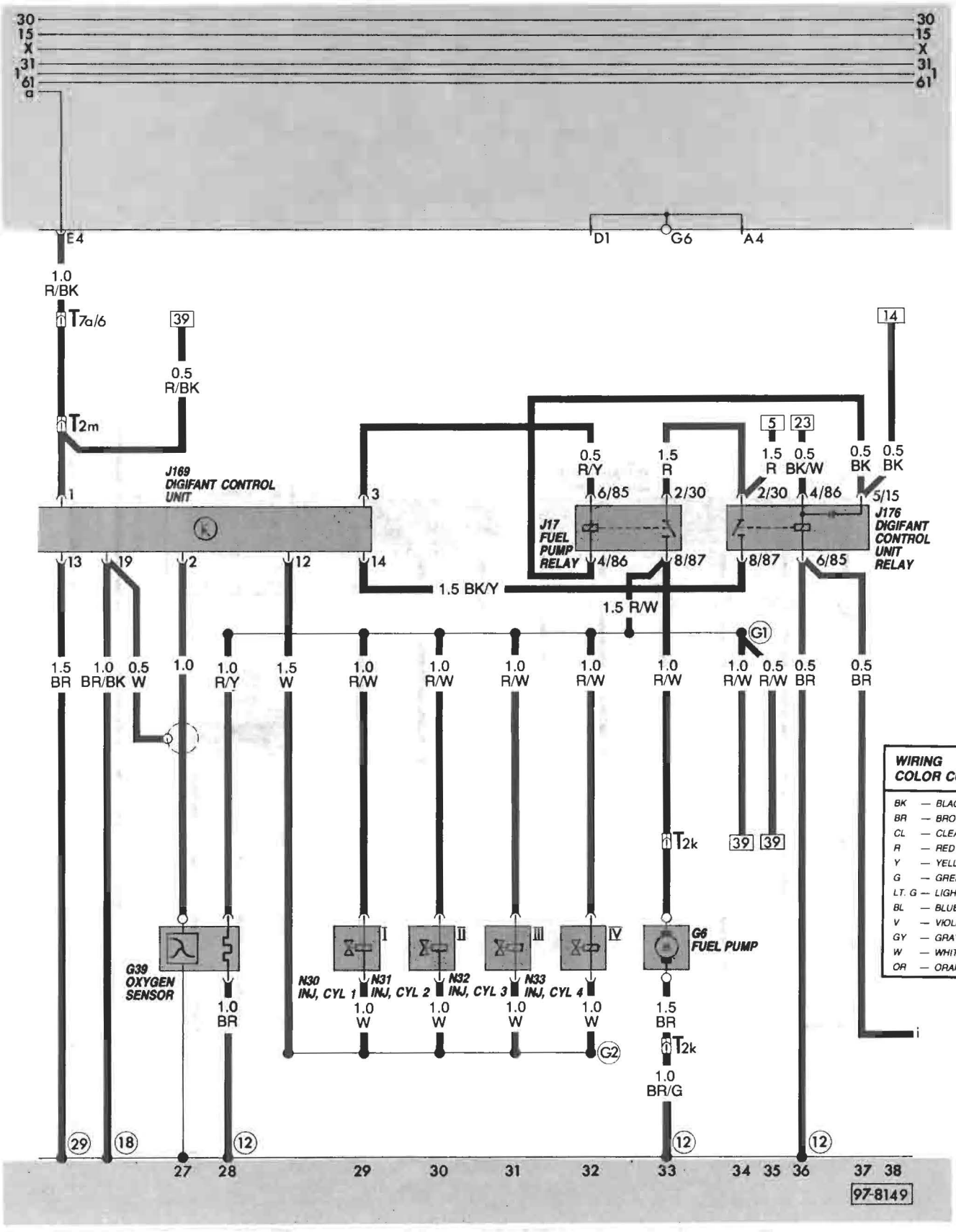
30
15
X
31
61
E4
D1
G6
A4
1.0 R/BK
T7a/6
39
0.5 R/BK
T2m
J169 DIGIFANT CONTROL UNIT
J17 FUEL PUMP RELAY
J176 DIGIFANT CONTROL UNIT RELAY
1.5 BK/Y
1.5 R/W
G1
G39 OXYGEN SENSOR
N30 INJ, CYL 1
N31 INJ, CYL 2
N32 INJ, CYL 3
N33 INJ, CYL 4
G6 FUEL PUMP
T2k
G2
1.0 BR/G
97-8149
WIRING COLOR CODE
BK — BLACK
BR — BROWN
CL — CLEAR
R — RED
Y — YELLOW
G — GREEN
LT. G — LIGHT GREEN
BL — BLUE
V — VIOLET
GY — GRAY
W — WHITE
OR — ORANGE

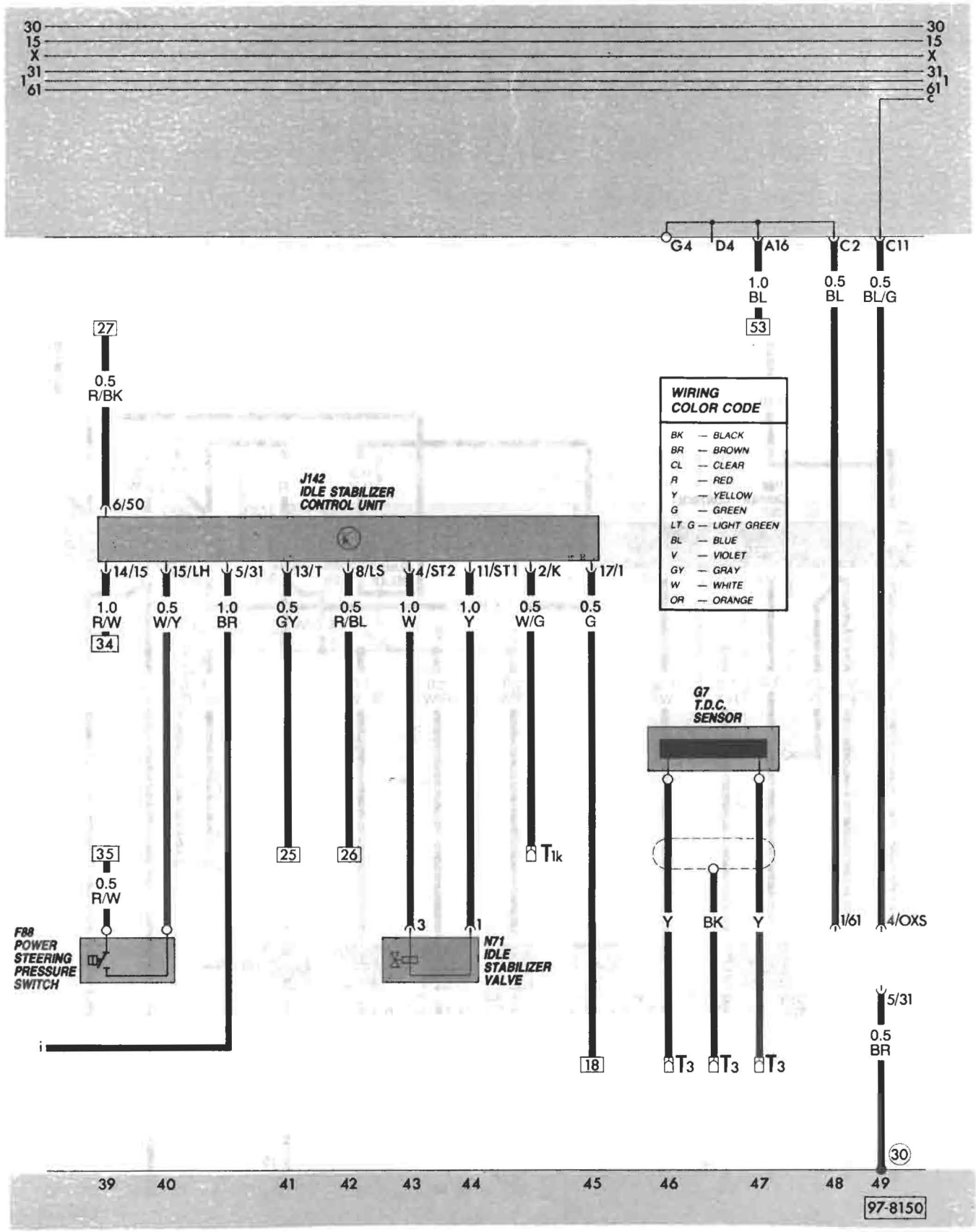
30
15
X
31
61
G4
D4
A16
C2
C11
1.0 BL
0.5 BL
0.5 BL/G
53
27
0.5 R/BK
6/50
J142 IDLE STABILIZER CONTROL UNIT
14/15
15/LH
5/31
13/T
8/LS
4/ST2
11/ST1
2/K
17/1
1.0 R/W
0.5 W/Y
1.0 BR
0.5 GY
0.5 R/BL
1.0 W
1.0 Y
0.5 W/G
0.5 G
34
WIRING COLOR CODE
BK — BLACK
BR — BROWN
CL — CLEAR
R — RED
Y — YELLOW
G — GREEN
LT G — LIGHT GREEN
BL — BLUE
V — VIOLET
GY — GRAY
W — WHITE
OR — ORANGE
G7 T.D.C. SENSOR
35
0.5 R/W
25
26
T1k
F88 POWER STEERING PRESSURE SWITCH
3
1
N71 IDLE STABILIZER VALVE
Y
BK
Y
1/61
4/OXS
5/31
0.5 BR
18
T3
T3
T3
30
39
40
41
42
43
44
45
46
47
48
49
97-8150

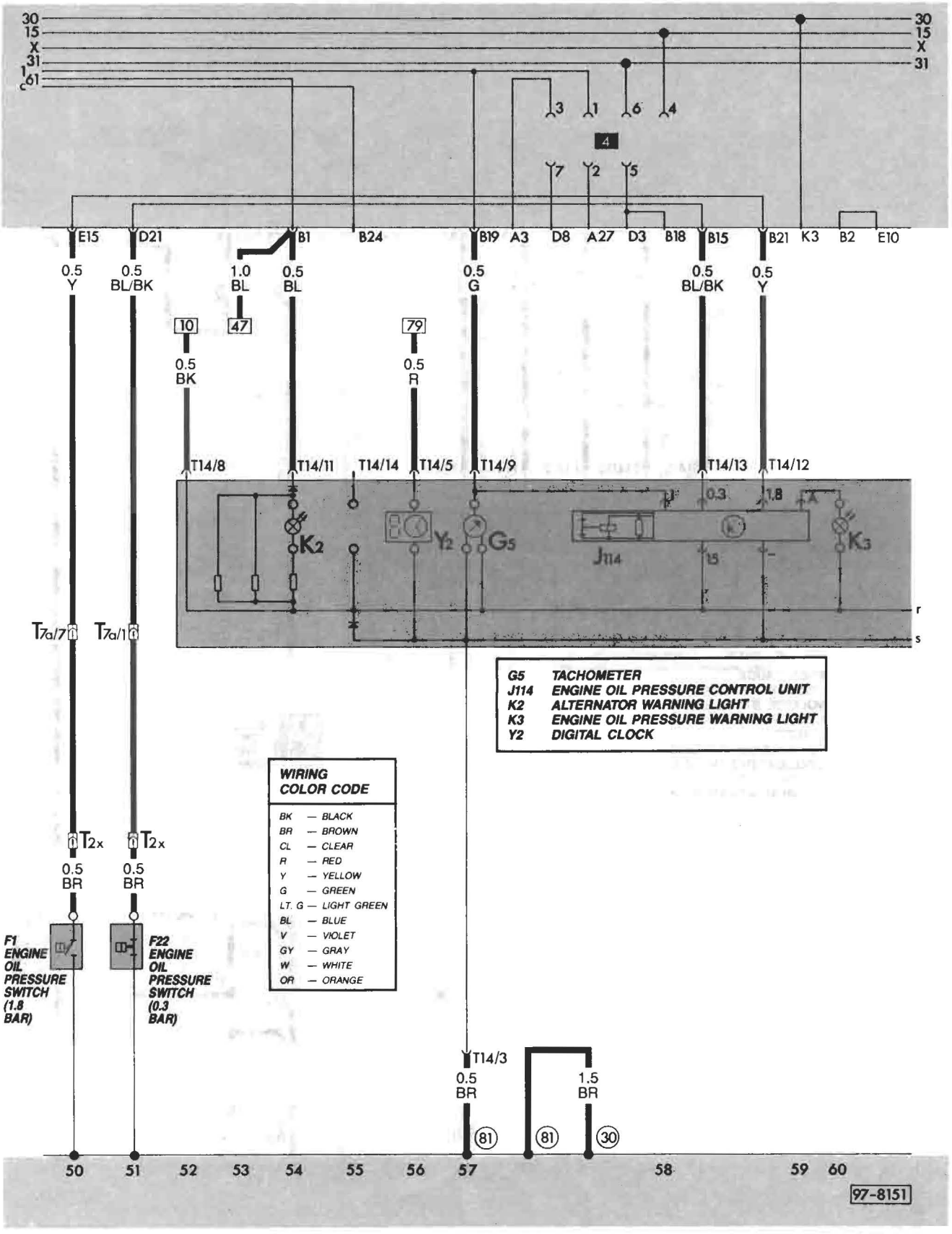
30
15
X
31
1
61
E15
D21
B1
B24
B19
A3
D8
A27
D3
B18
B15
B21
K3
B2
E10
0.5 Y
0.5 BL/BK
1.0 BL
0.5 BL
0.5 G
0.5 BL/BK
0.5 Y
10
47
79
0.5 BK
0.5 R
T14/8
T14/11
T14/14
T14/5
T14/9
T14/13
T14/12
K2
Y2
G5
J114
K3
T7a/7
T7a/1
T2x
0.5 BR
F1 ENGINE OIL PRESSURE SWITCH (1.8 BAR)
F22 ENGINE OIL PRESSURE SWITCH (0.3 BAR)
T14/3
1.5 BR
81
30
50
51
52
53
54
55
56
57
58
59
60
97-8151
G5 TACHOMETER
J114 ENGINE OIL PRESSURE CONTROL UNIT
K2 ALTERNATOR WARNING LIGHT
K3 ENGINE OIL PRESSURE WARNING LIGHT
Y2 DIGITAL CLOCK
WIRING COLOR CODE
BK — BLACK
BR — BROWN
CL — CLEAR
R — RED
Y — YELLOW
G — GREEN
LT. G — LIGHT GREEN
BL — BLUE
V — VIOLET
GY — GRAY
W — WHITE
OR — ORANGE

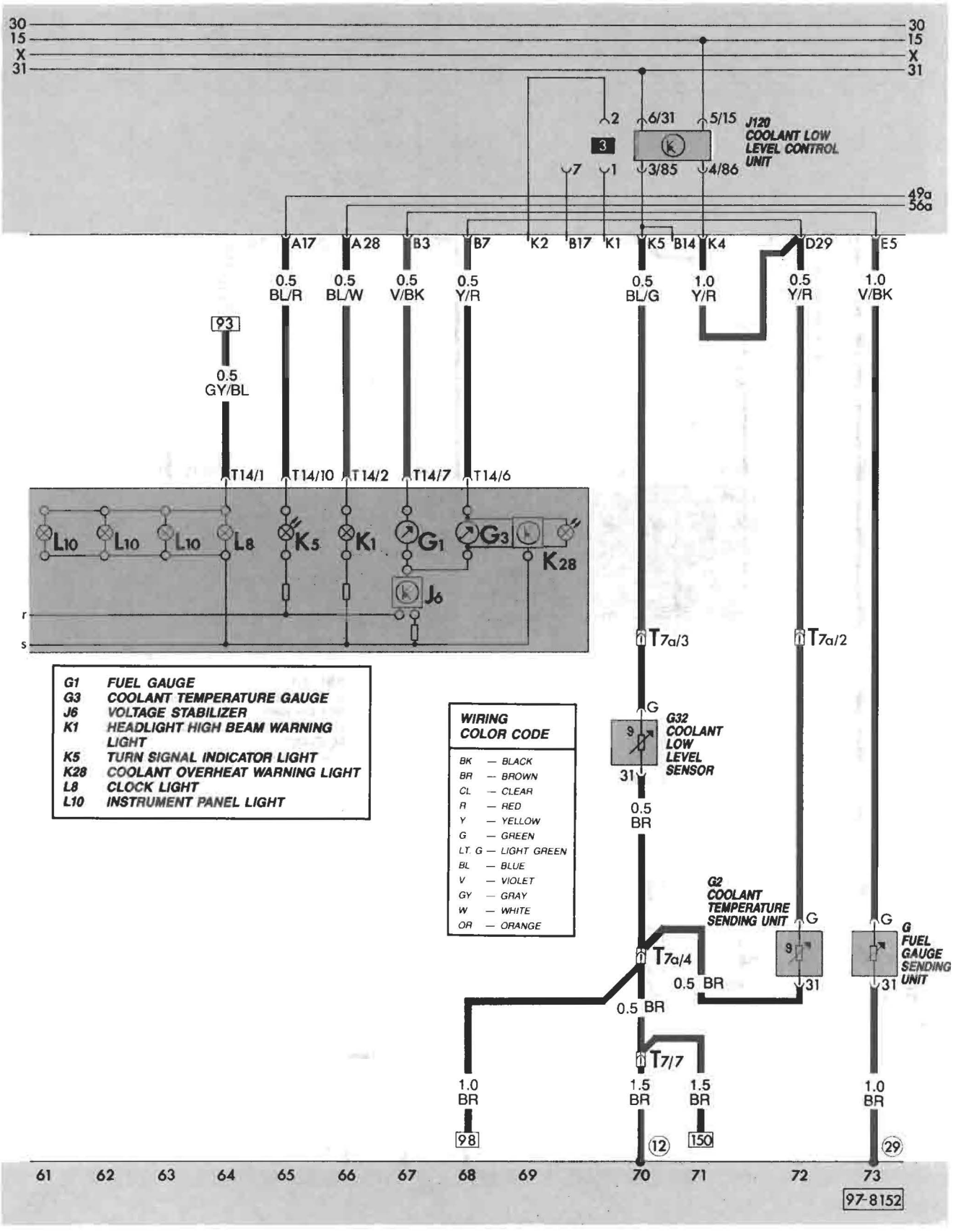

G1	FUEL GAUGE
G3	COOLANT TEMPERATURE GAUGE
J6	VOLTAGE STABILIZER
K1	HEADLIGHT HIGH BEAM WARNING LIGHT
K5	TURN SIGNAL INDICATOR LIGHT
K28	COOLANT OVERHEAT WARNING LIGHT
L8	CLOCK LIGHT
L10	INSTRUMENT PANEL LIGHT

WIRING COLOR CODE

BK	— BLACK
BR	— BROWN
CL	— CLEAR
R	— RED
Y	— YELLOW
G	— GREEN
LT. G	— LIGHT GREEN
BL	— BLUE
V	— VIOLET
GY	— GRAY
W	— WHITE
OR	— ORANGE

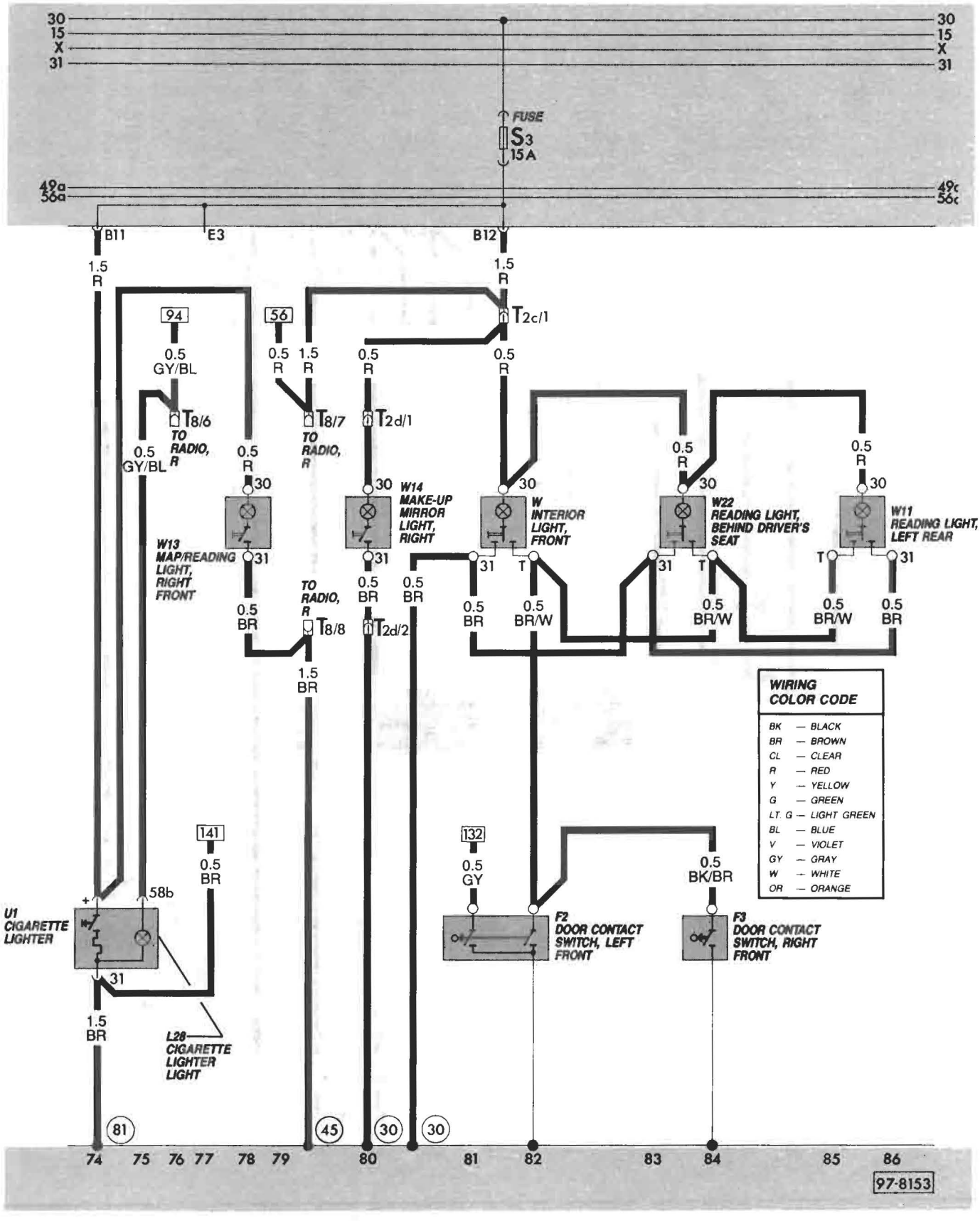
30
15
X
31
FUSE
S3
15A
49a
56a
B11
E3
B12
1.5 R
94
0.5 GY/BL
56
0.5 R
T8/6
TO RADIO, R
T8/7
T2d/1
T2c/1
W13 MAP/READING LIGHT, RIGHT FRONT
W14 MAKE-UP MIRROR LIGHT, RIGHT
W INTERIOR LIGHT, FRONT
W22 READING LIGHT, BEHIND DRIVER'S SEAT
W11 READING LIGHT, LEFT REAR
0.5 BR
0.5 BR/W
T8/8
T2d/2
1.5 BR
WIRING COLOR CODE
BK — BLACK
BR — BROWN
CL — CLEAR
R — RED
Y — YELLOW
G — GREEN
LT. G — LIGHT GREEN
BL — BLUE
V — VIOLET
GY — GRAY
W — WHITE
OR — ORANGE
141
0.5 BR
58b
U1 CIGARETTE LIGHTER
L28 CIGARETTE LIGHTER LIGHT
132
0.5 GY
0.5 BK/BR
F2 DOOR CONTACT SWITCH, LEFT FRONT
F3 DOOR CONTACT SWITCH, RIGHT FRONT
81
45
30
74 75 76 77 78 79 80 81 82 83 84 85 86
97-8153

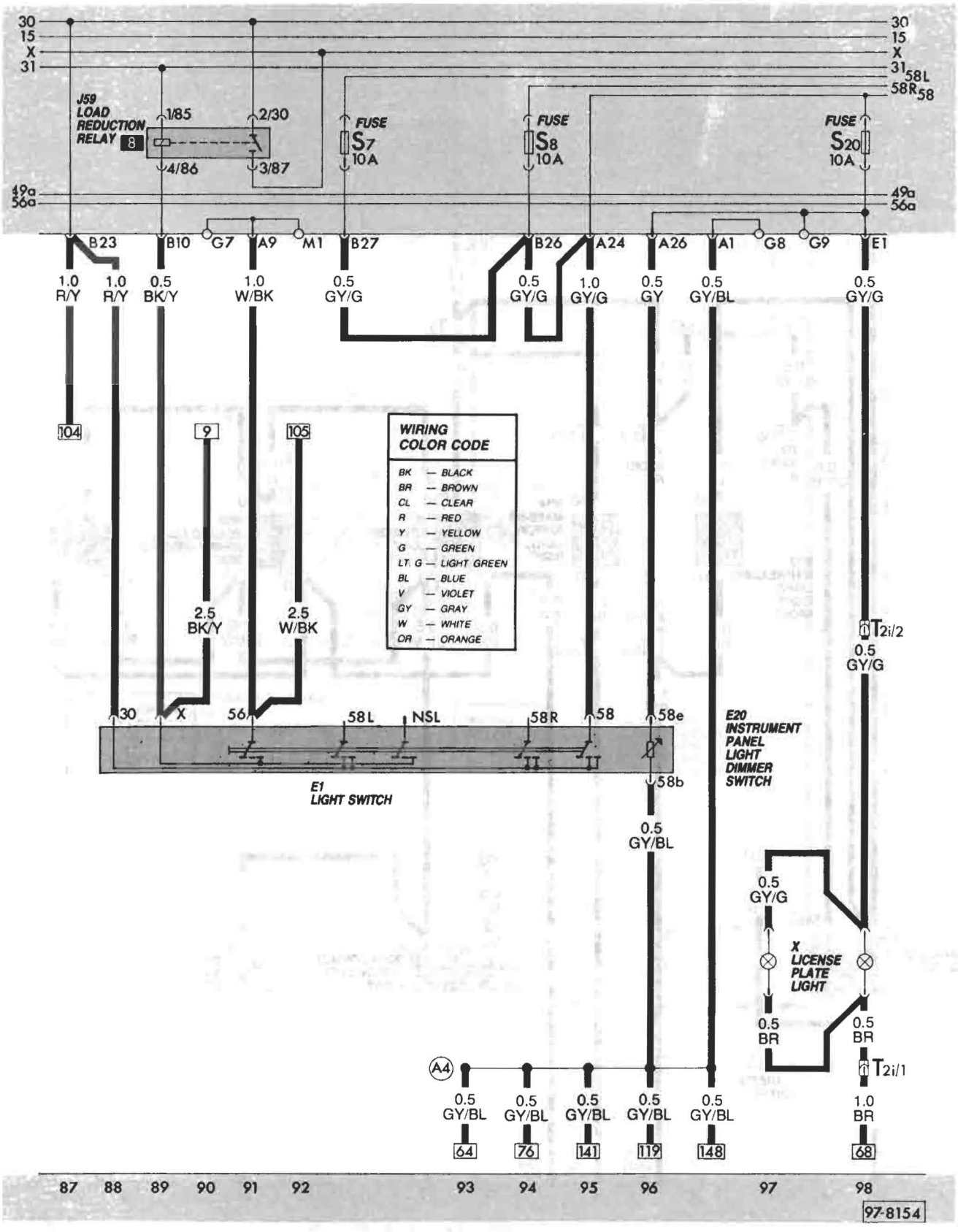

97.211 Main wiring diagram

Water-cooled–Digifant from 1990

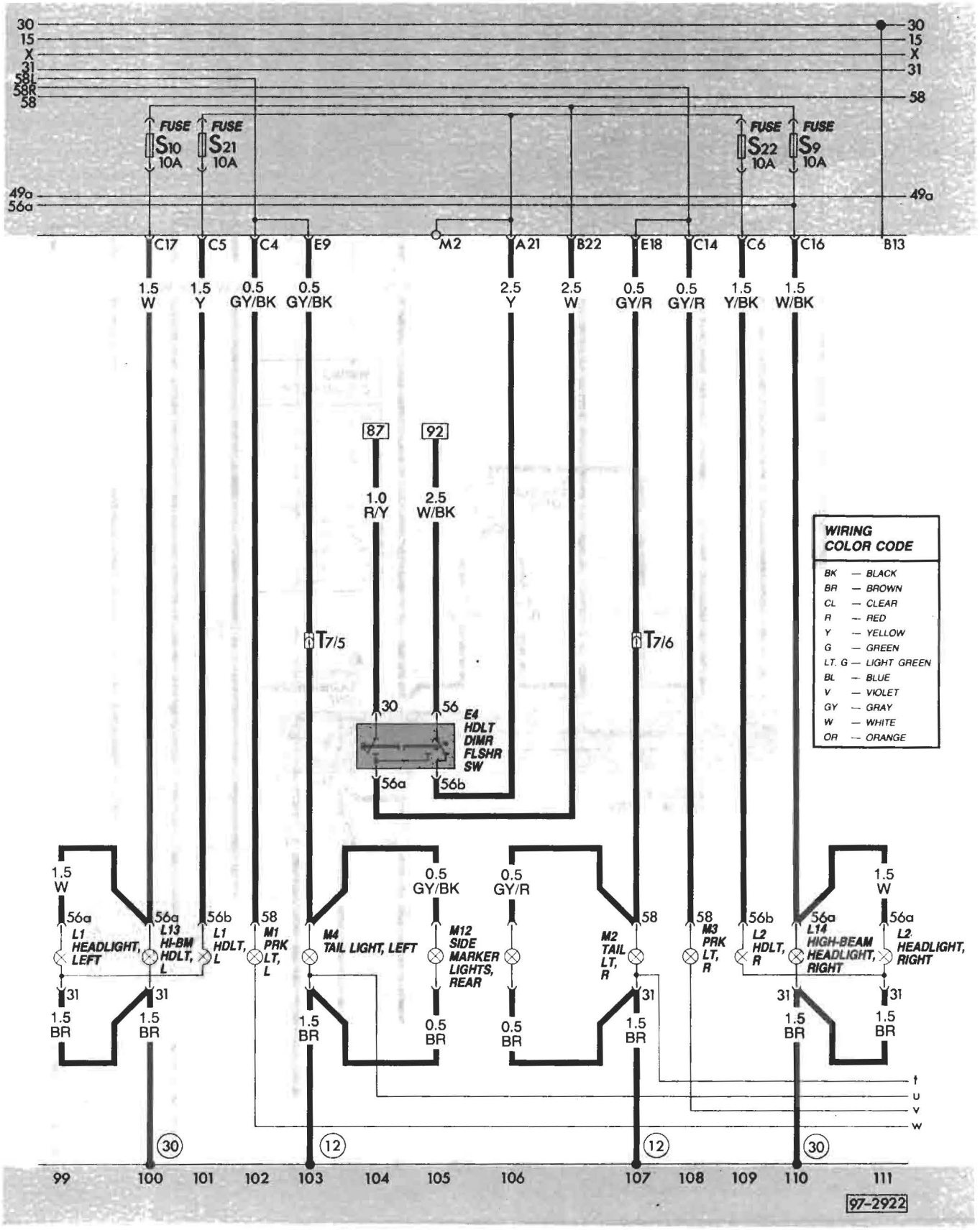

Water-cooled–Digifant from 1990

Main wiring diagram **97.212**

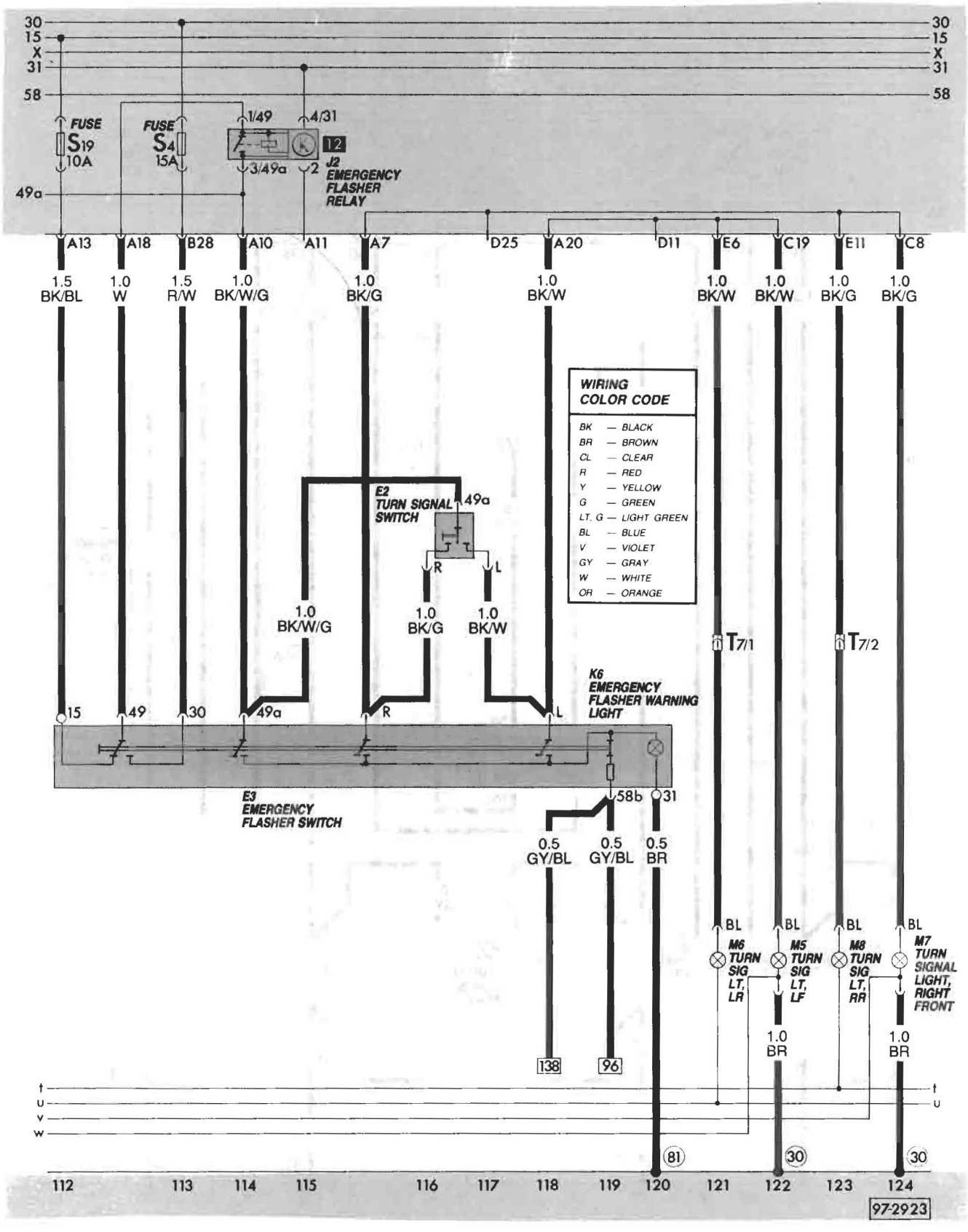

97.213 Main wiring diagram

Water-cooled–Digifant from 1990

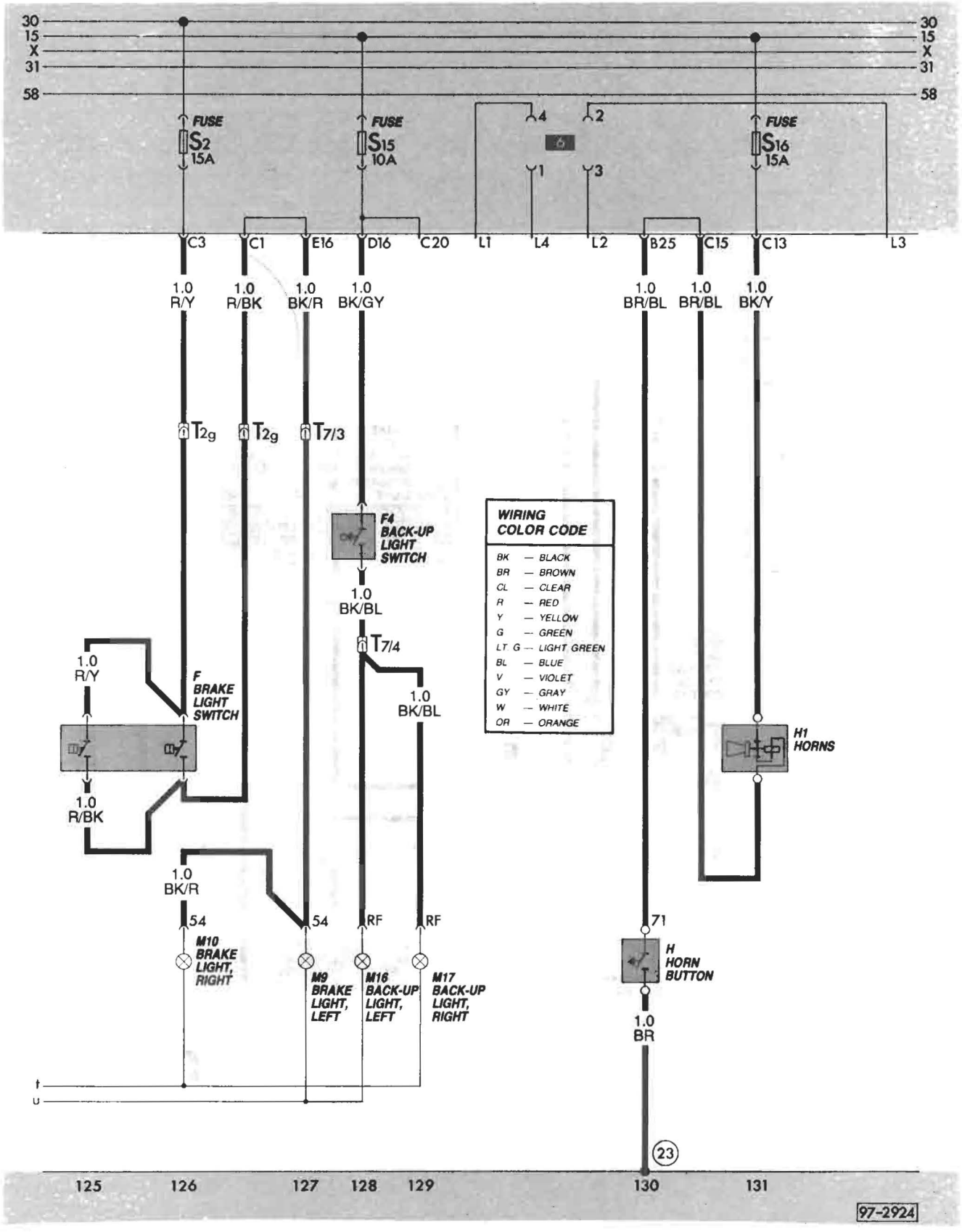

Water-cooled–Digifant from 1990

Main wiring diagram **97.214**

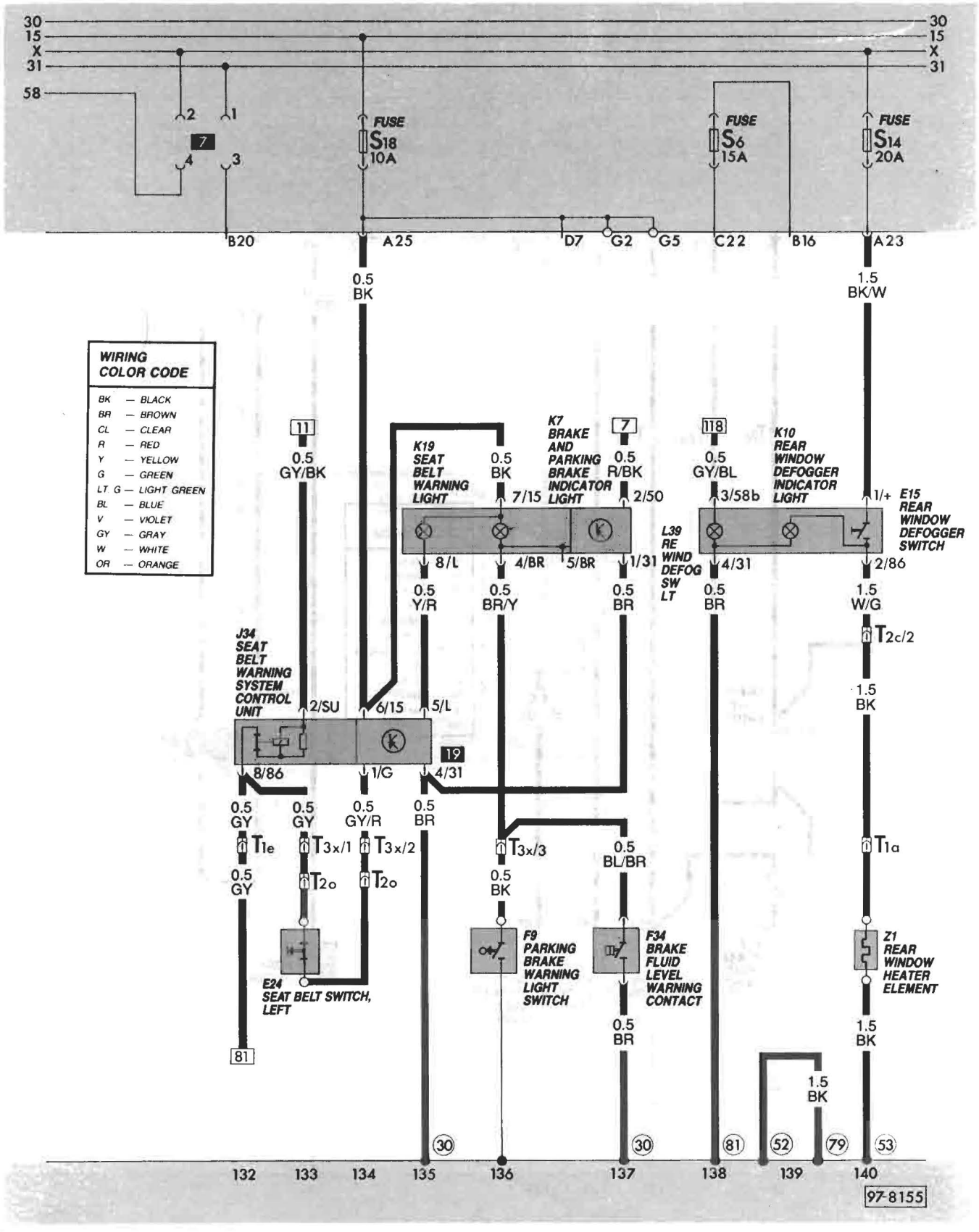

97.215 Main wiring diagram

Water-cooled–Digifant from 1990

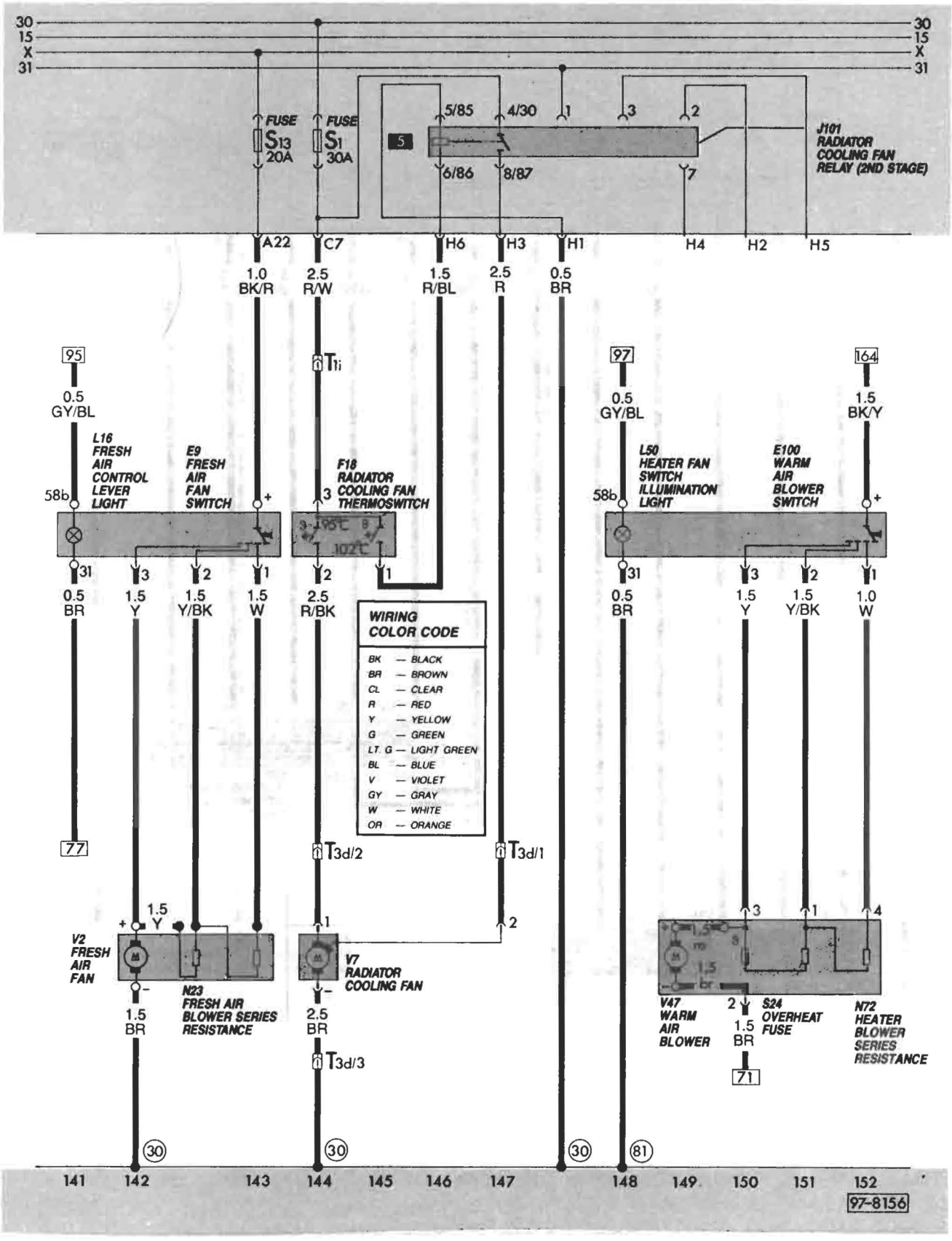

Water-cooled–Digifant from 1990

Main wiring diagram **97.216**

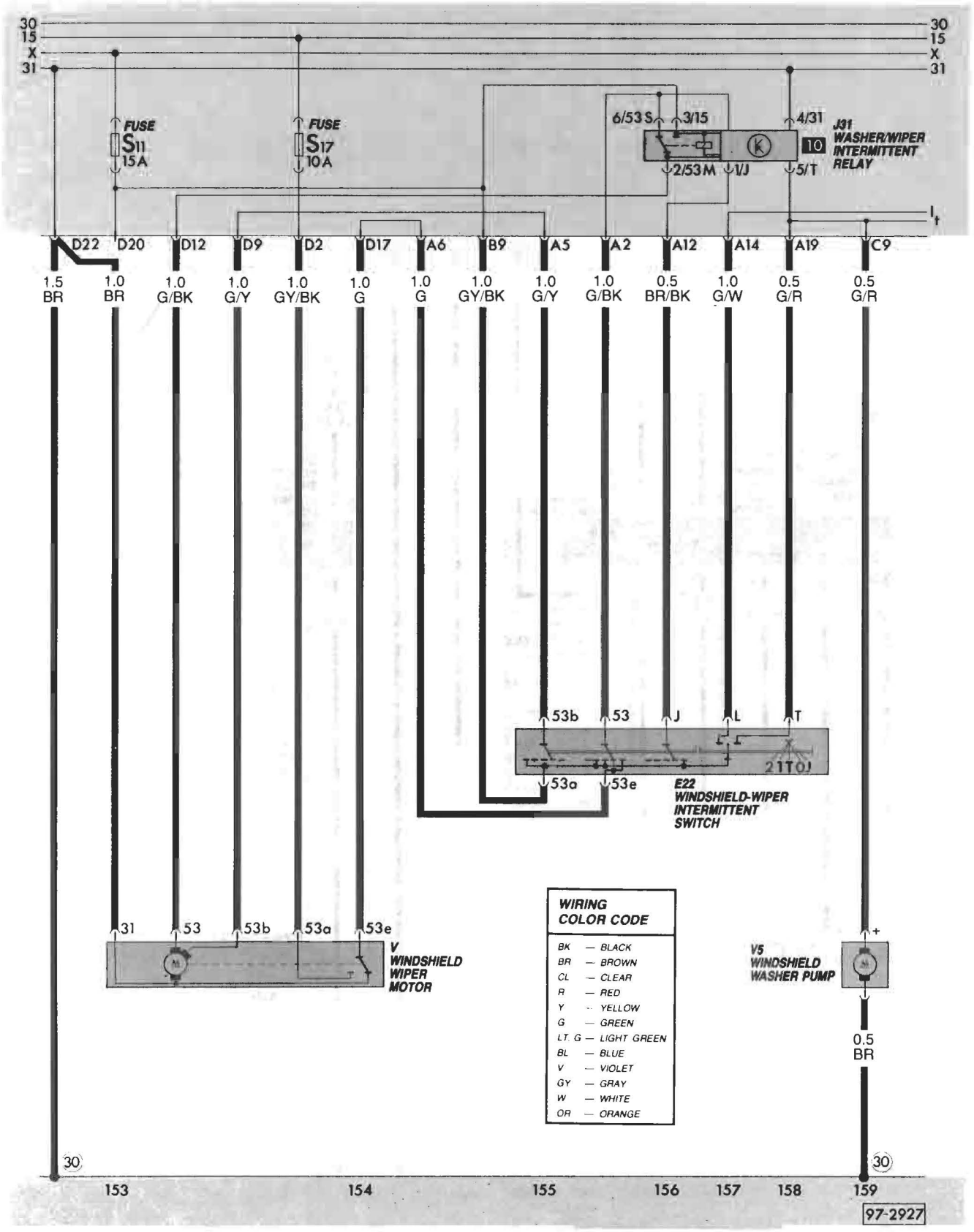

97.217 Main wiring diagram

Water-cooled–Digifant from 1990

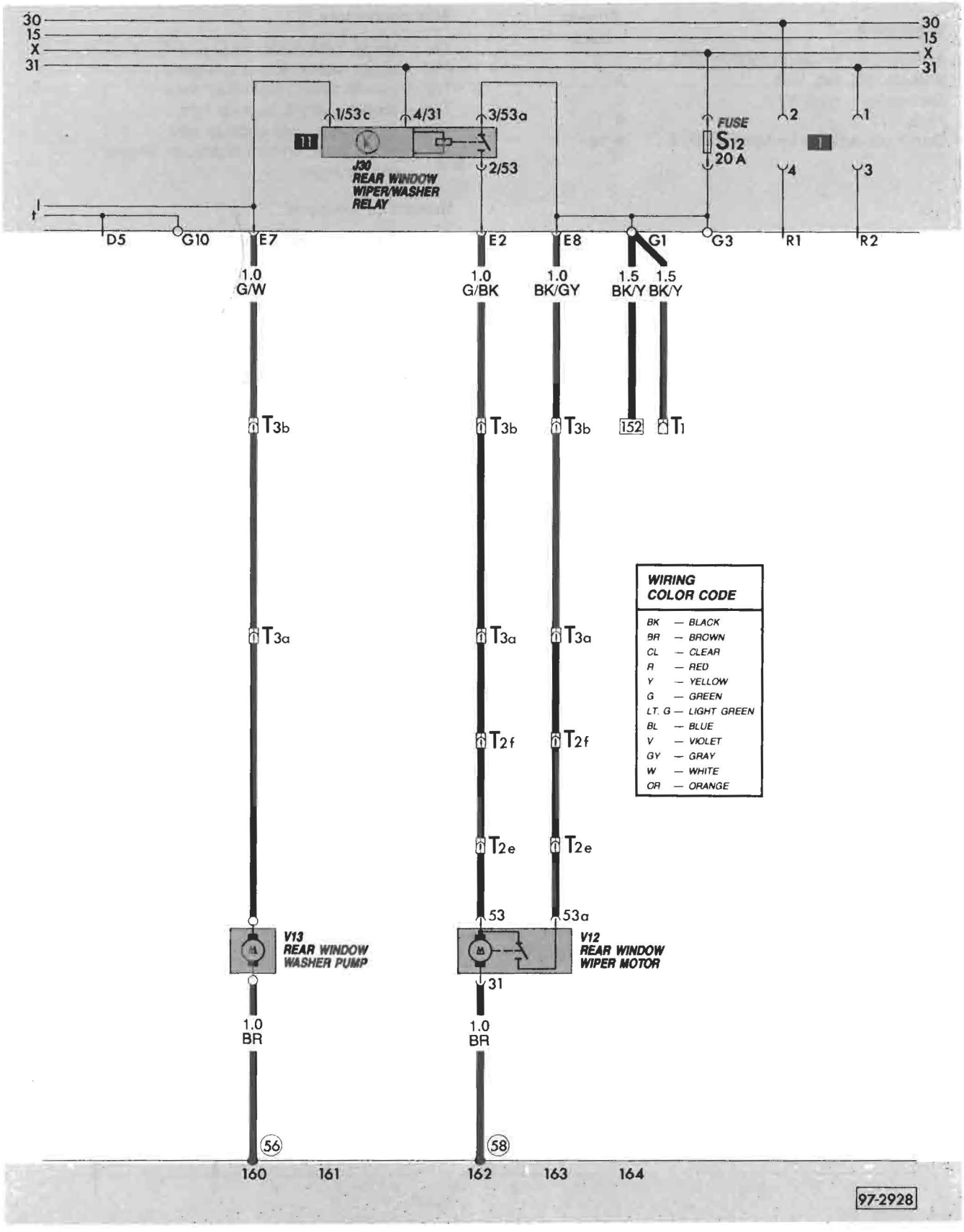

WIRING COLOR CODE

BK	— BLACK
BR	— BROWN
CL	— CLEAR
R	— RED
Y	— YELLOW
G	— GREEN
LT. G	— LIGHT GREEN
BL	— BLUE
V	— VIOLET
GY	— GRAY
W	— WHITE
OR	— ORANGE

Description	Current track
Automatic transmission console light, L19	1, 3
Back-up light, left, M16	5
Back-up light, right, M17	6
Fuse, S15	6
Starter cut-out/back-up light switch, E17	5-12

Wire connectors

T1a — single, behind fuse/relay panel
T1u — single, behind instrument panel
T2p — double, behind fuse/relay panel
T6a — six-point, at left back-up light
T6b — six-point, at right back-up light
T7 — seven point, on wire distributor, engine compartment

Ground connections

(30) — beside fuse/relay panel

(63) — on left tail light bulb holder

(64) — on right tail light bulb holder

Welded wiring harness points

(A4) — plus connection (58b), in instrument panel wiring harness

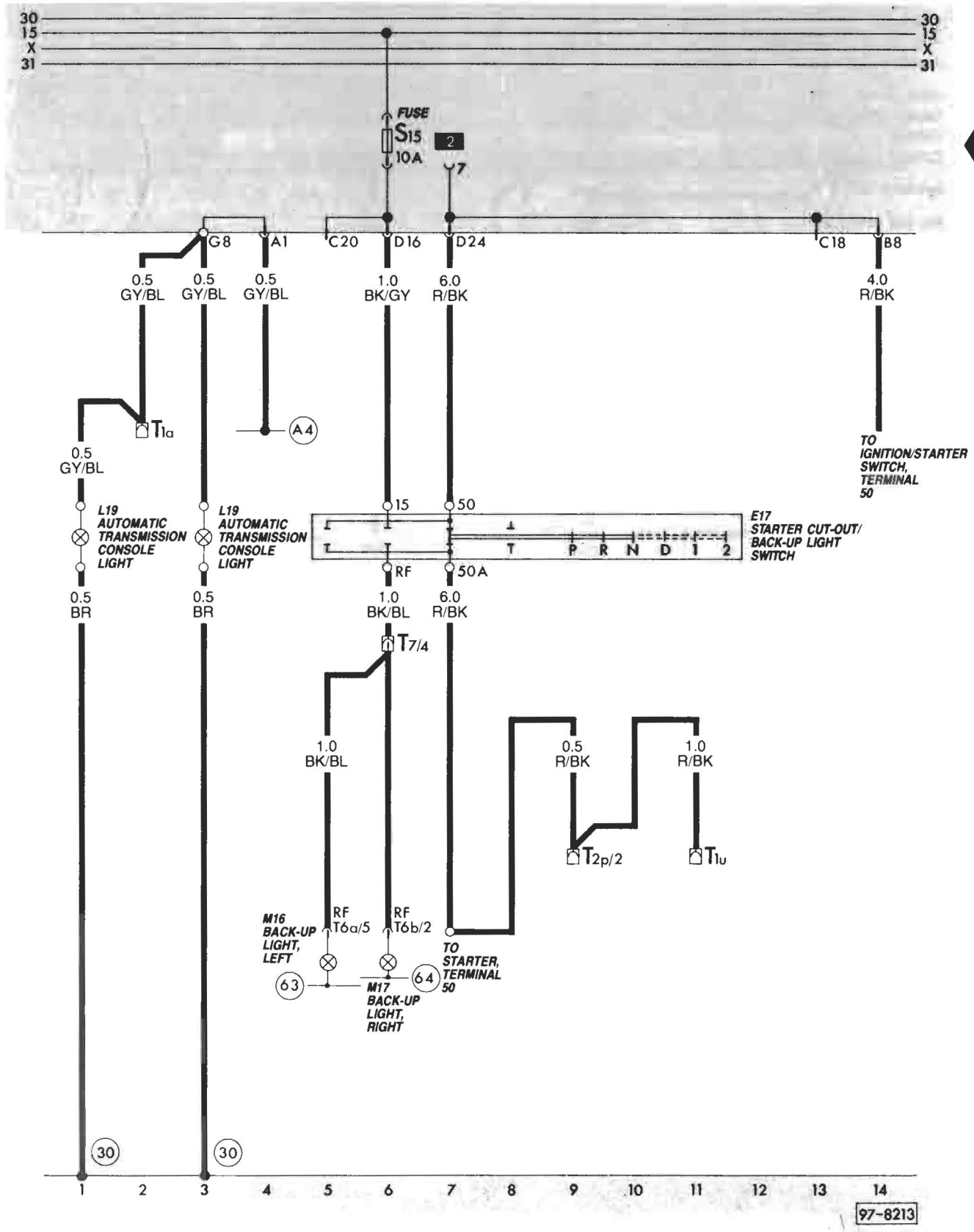
30
15
X
31
FUSE
S15
10A
2
7
G8
A1
C20
D16
D24
C18
B8
0.5 GY/BL
0.5 GY/BL
0.5 GY/BL
1.0 BK/GY
6.0 R/BK
4.0 R/BK
T1a
A4
TO IGNITION/STARTER SWITCH, TERMINAL 50
L19 AUTOMATIC TRANSMISSION CONSOLE LIGHT
L19 AUTOMATIC TRANSMISSION CONSOLE LIGHT
15
50
E17 STARTER CUT-OUT/ BACK-UP LIGHT SWITCH
T P R N D 1 2
RF
50A
0.5 BR
0.5 BR
1.0 BK/BL
6.0 R/BK
T7/4
1.0 BK/BL
0.5 R/BK
1.0 R/BK
T2p/2
T1u
M16 BACK-UP LIGHT, LEFT
RF T6a/5
RF T6b/2
TO STARTER, TERMINAL 50
63
64
M17 BACK-UP LIGHT, RIGHT
30
30
1 2 3 4 5 6 7 8 9 10 11 12 13 14
97-8213

Description	Current Track
Alternator	6
Auto trans. console lites	13-14
Auxiliary battery	2
Back-up lite, left	15
Back-up lite, right	17
Battery	1
Battery cut-out relay	2-4
Ign./start sw.	9-12
Neutral safety switch	15-17

Wire connectors

T1b — single, wire distributor, LF eng. compart.
T1d — single, wire distributor, LF eng. compart.
T2j — double, under fuse/relay panel
T2m — double, under fuse/relay panel
T7a/ — seven-point, wire distributor, LF eng. compart.
T14/ — fourteen-point, on inst. cluster

Ground Connections

(1) — ground from battery to body
(2) — ground from transmission to body
(3) — ground from aux. battery to ground
(12) — on LF cross member
(15) — in eng. compart. near ign. coil

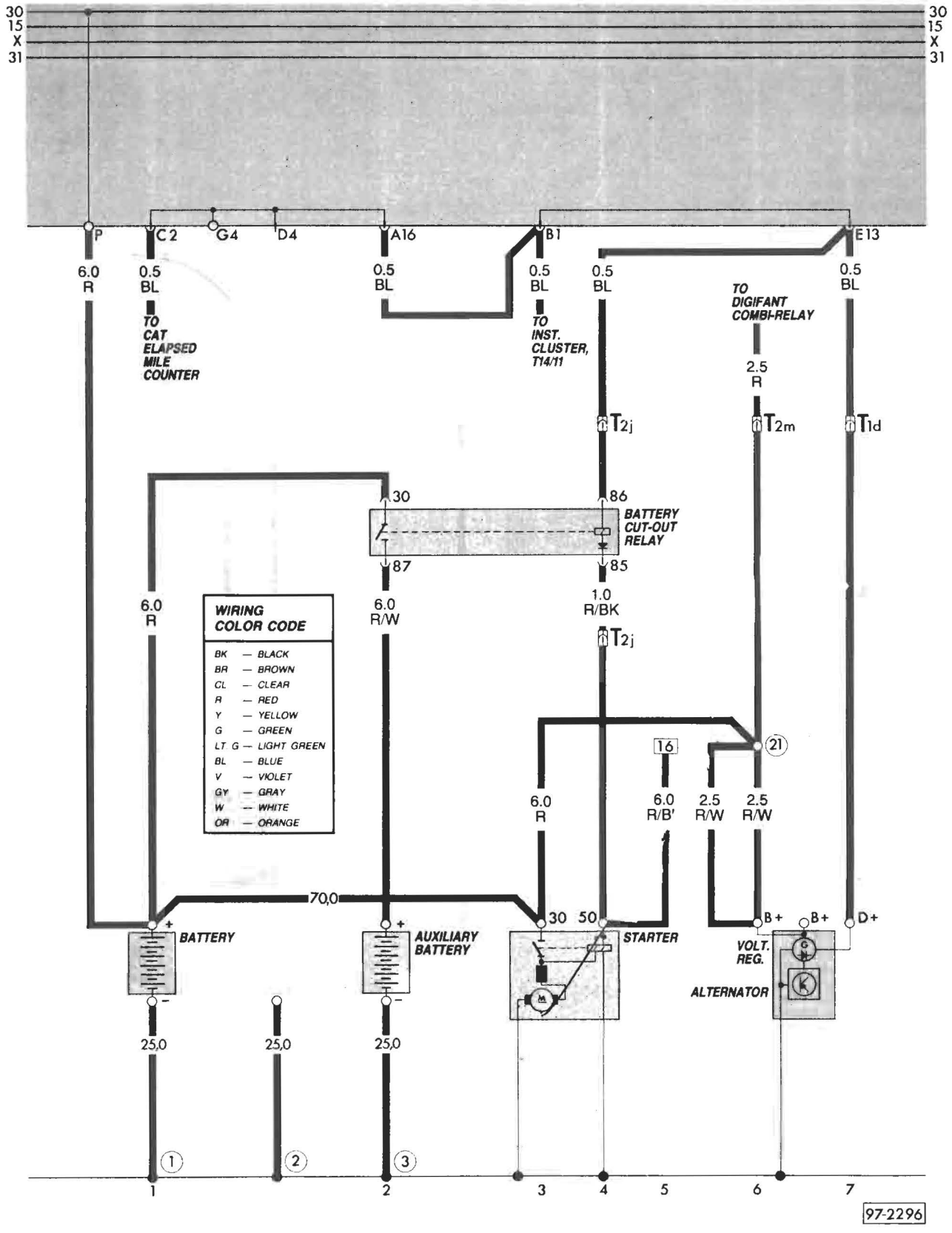
30
15
X
31
P
C2
G4
D4
A16
B1
E13
6.0 R
0.5 BL
TO CAT ELAPSED MILE COUNTER
0.5 BL
0.5 BL
TO INST. CLUSTER, T14/11
0.5 BL
TO DIGIFANT COMBI-RELAY
2.5 R
0.5 BL
T2j
T2m
T1d
30
86
87
85
BATTERY CUT-OUT RELAY
6.0 R
6.0 R/W
1.0 R/BK
T2j
WIRING COLOR CODE
BK — BLACK
BR — BROWN
CL — CLEAR
R — RED
Y — YELLOW
G — GREEN
LT. G — LIGHT GREEN
BL — BLUE
V — VIOLET
GY — GRAY
W — WHITE
OR — ORANGE
16
21
6.0 R
6.0 R/B'
2.5 R/W
2.5 R/W
70,0
30
50
B+
B+
D+
BATTERY
AUXILIARY BATTERY
STARTER
VOLT. REG.
ALTERNATOR
25,0
25,0
25,0
1
2
3
1
2
3
4
5
6
7
97-2296

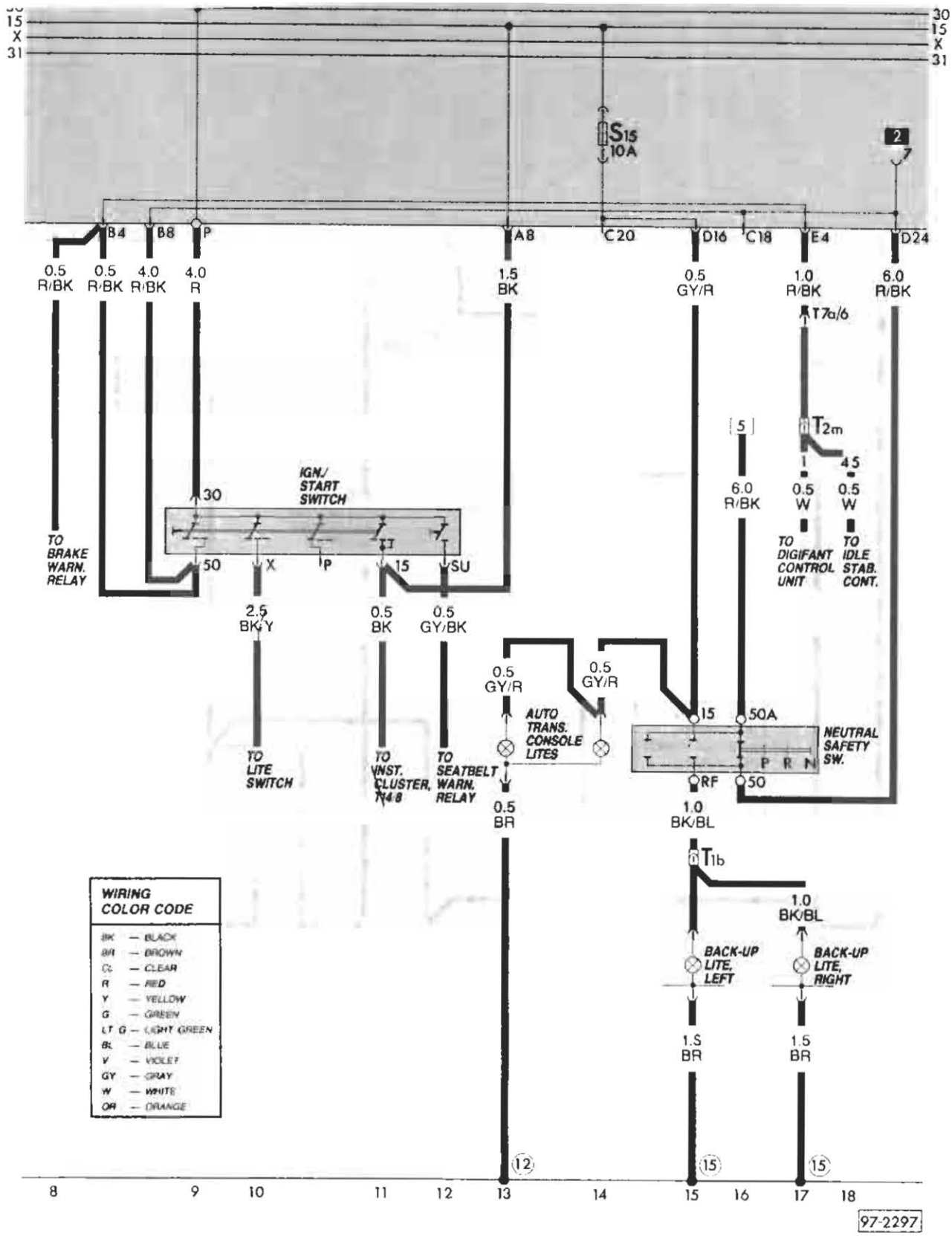
30
15
X
31
S15
10A
2
7
B4
B8
P
A8
C20
D16
C18
E4
D24
0.5 R/BK
0.5 R/BK
4.0 R/BK
4.0 R
1.5 BK
0.5 GY/R
1.0 R/BK
6.0 R/BK
T7a/6
T2m
5
1
4
5
6.0 R/BK
0.5 W
0.5 W
TO DIGIFANT CONTROL UNIT
TO IDLE STAB. CONT.
IGN./ START SWITCH
30
50
X
P
15
SU
TO BRAKE WARN. RELAY
2.5 BK/Y
0.5 BK
0.5 GY/BK
TO LITE SWITCH
TO INST. CLUSTER, T4/8
TO SEATBELT WARN. RELAY
0.5 GY/R
0.5 GY/R
AUTO TRANS. CONSOLE LITES
15
50A
NEUTRAL SAFETY SW.
P R N
RF
50
0.5 BR
1.0 BK/BL
T1b
1.0 BK/BL
BACK-UP LITE, LEFT
BACK-UP LITE, RIGHT
1.5 BR
1.5 BR
WIRING COLOR CODE
BK — BLACK
BR — BROWN
CL — CLEAR
R — RED
Y — YELLOW
G — GREEN
LT G — LIGHT GREEN
BL — BLUE
V — VIOLET
GY — GRAY
W — WHITE
OR — ORANGE
12
15
15
8
9
10
11
12
13
14
15
16
17
18
97-2297

Description	Current track
Auxiliary battery, A1	5
Battery, A	9
Battery cut-out relay, J7	4-5

Wire connectors

T2K — double, behind instrument panel, left

Ground connections

(1) — ground strap, battery to body

(5) — ground strap, auxiliary battery to body

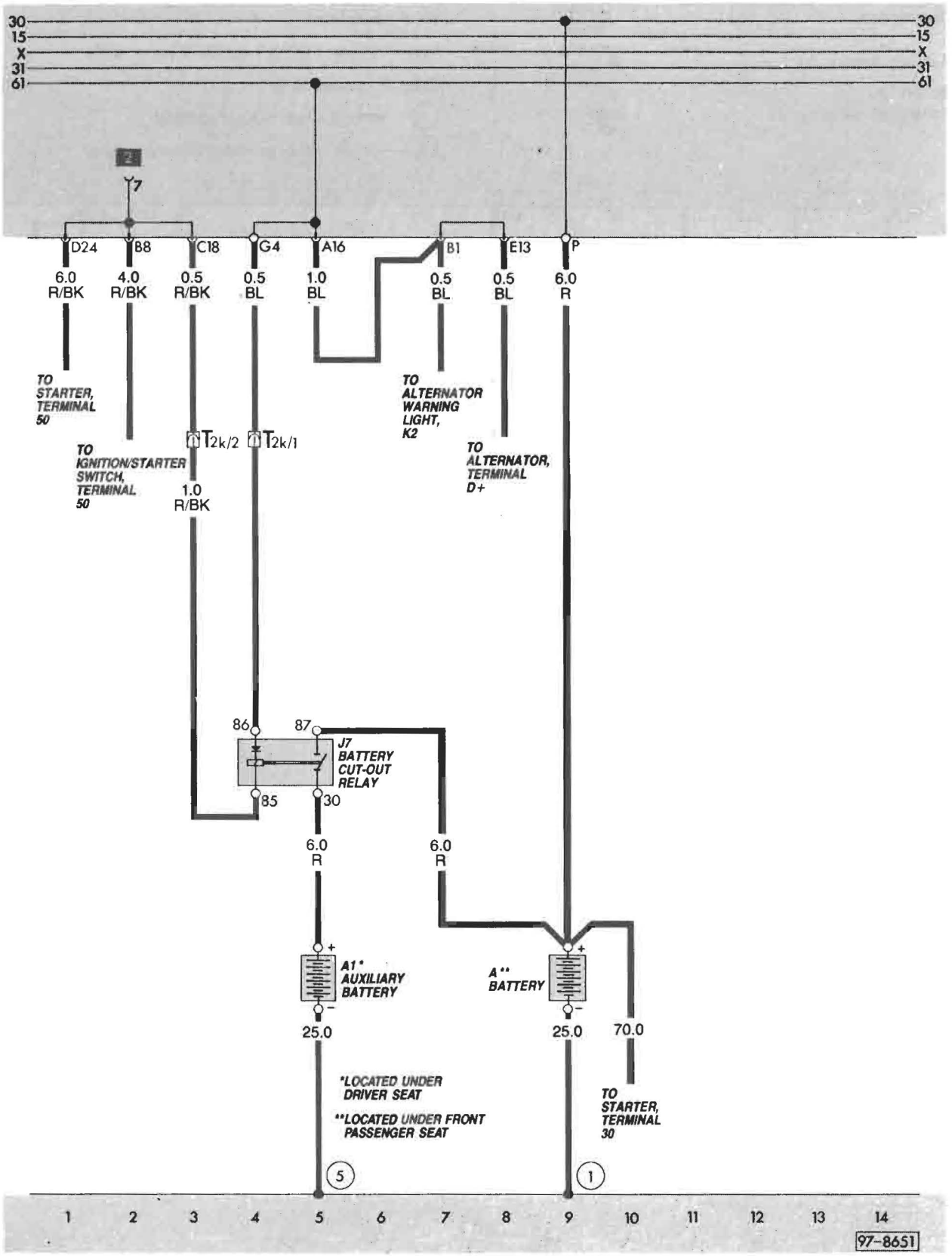
30
15
X
31
61
7
D24
B8
C18
G4
A16
B1
E13
P
6.0 R/BK
4.0 R/BK
0.5 R/BK
0.5 BL
1.0 BL
0.5 BL
0.5 BL
6.0 R
TO STARTER, TERMINAL 50
TO IGNITION/STARTER SWITCH, TERMINAL 50
T2k/2
T2k/1
1.0 R/BK
TO ALTERNATOR WARNING LIGHT, K2
TO ALTERNATOR, TERMINAL D+
86
87
J7 BATTERY CUT-OUT RELAY
85
30
6.0 R
6.0 R
A1* AUXILIARY BATTERY
A** BATTERY
25.0
25.0
70.0
*LOCATED UNDER DRIVER SEAT
**LOCATED UNDER FRONT PASSENGER SEAT
TO STARTER, TERMINAL 30
5
1
1 2 3 4 5 6 7 8 9 10 11 12 13 14
97-8651

Description	Current track
Central locking system fuse, S52	2
Central locking system motor, decklid, V53	11-12
Central locking system motor, driver door, V56	1-3
Central locking system motor, passenger door, V57	4-6
Central locking system motor, sliding door, V58	7-9
Sliding door contact switch, F7	7-10

Wire connectors

T1 — single, in driver's door
T1a — single, in passenger's door
T3 — three-point, in driver's door
T3a — three-point, in passenger's door
T3b — three-point, behind instrument panel, right
T3c — three-point, near upper right B-pillar
T3d — three-point, above left rear window
T3e — three-point, on rear deck lid
T4 — four-point, behind instrument panel, left
T4a — four-point, behind instrument panel, right

Ground connections

(30) — near fuse/relay panel

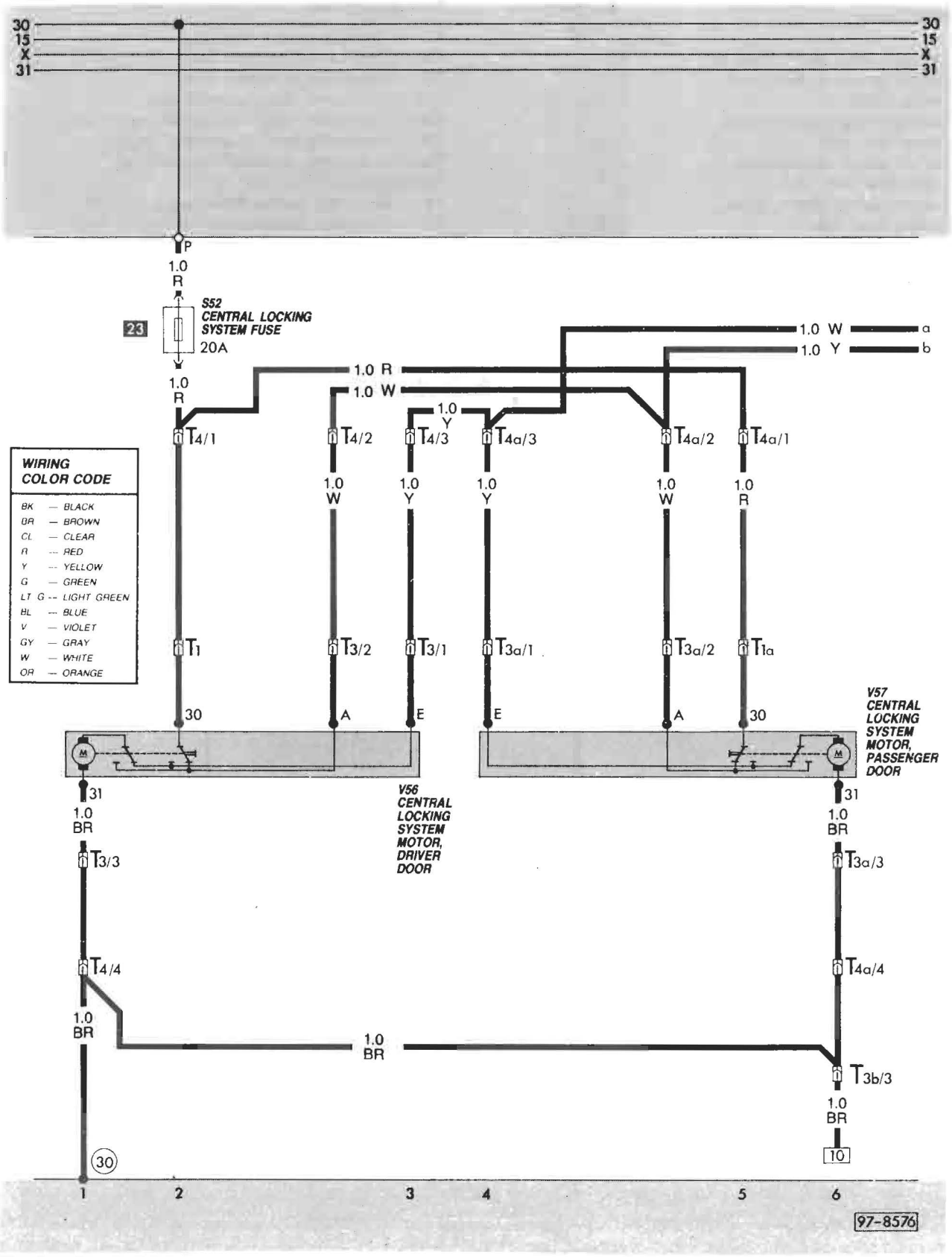
30
15
X
31
P
1.0 R
S52
CENTRAL LOCKING SYSTEM FUSE
23
20A
1.0 R
1.0 W
1.0 Y
1.0 W a
1.0 Y b
T4/1
T4/2
T4/3
T4a/3
T4a/2
T4a/1
T1
T3/2
T3/1
T3a/1
T3a/2
T1a
30
A
E
V56 CENTRAL LOCKING SYSTEM MOTOR, DRIVER DOOR
V57 CENTRAL LOCKING SYSTEM MOTOR, PASSENGER DOOR
31
1.0 BR
T3/3
T4/4
T3a/3
T4a/4
T3b/3
10
WIRING COLOR CODE
BK — BLACK
BR — BROWN
CL — CLEAR
R — RED
Y — YELLOW
G — GREEN
LT G — LIGHT GREEN
BL — BLUE
V — VIOLET
GY — GRAY
W — WHITE
OR — ORANGE
1 2 3 4 5 6
97-8576

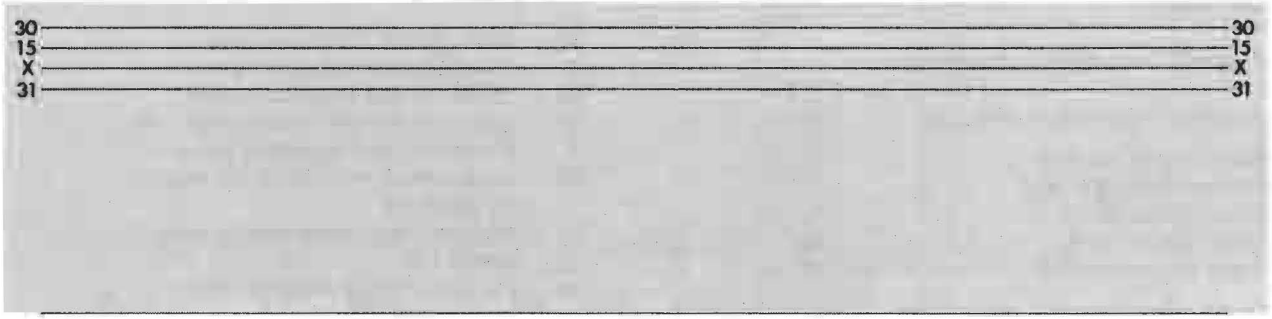
30
15
X
31
30
15
X
31

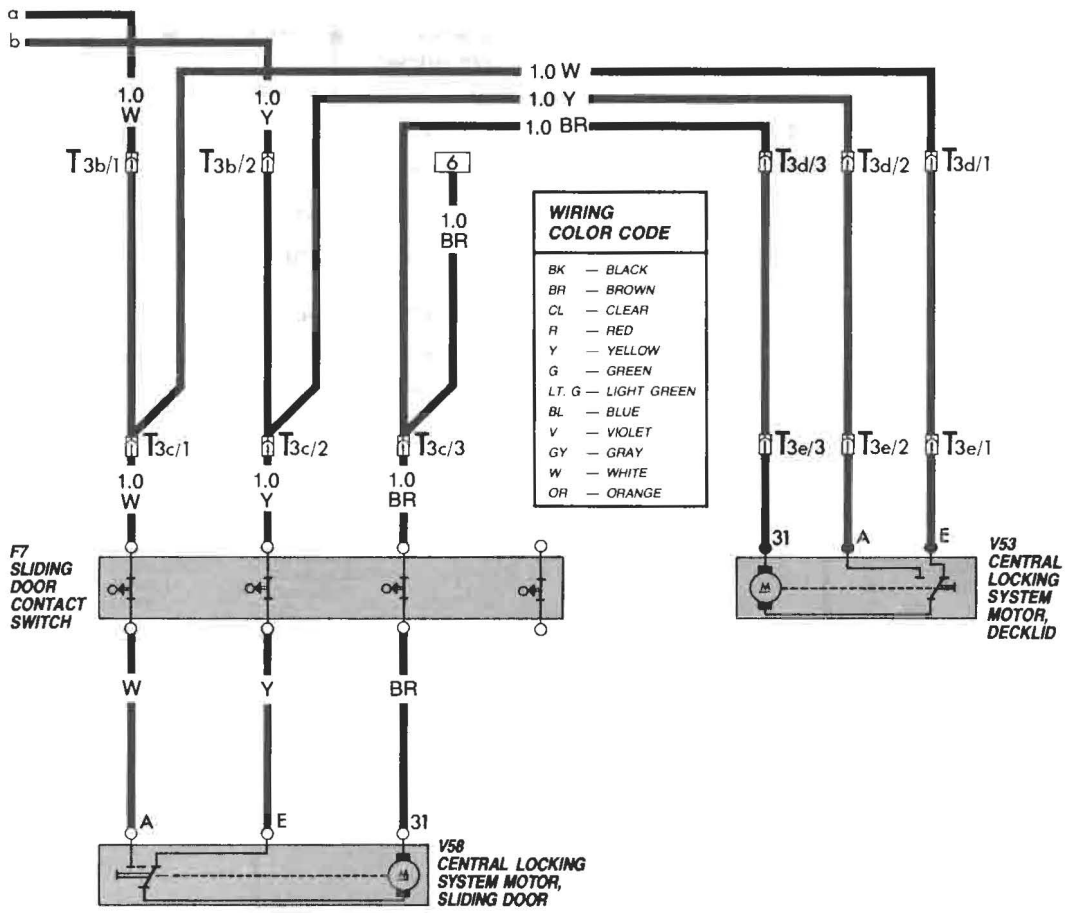
a
b
1.0 W
1.0 Y
1.0 BR
1.0 W
1.0 Y
T3b/1
T3b/2
6
1.0 BR
T3d/3
T3d/2
T3d/1
WIRING COLOR CODE
BK — BLACK
BR — BROWN
CL — CLEAR
R — RED
Y — YELLOW
G — GREEN
LT. G — LIGHT GREEN
BL — BLUE
V — VIOLET
GY — GRAY
W — WHITE
OR — ORANGE
T3c/1
T3c/2
T3c/3
T3e/3
T3e/2
T3e/1
1.0 W
1.0 Y
1.0 BR
F7 SLIDING DOOR CONTACT SWITCH
31
A
E
V53 CENTRAL LOCKING SYSTEM MOTOR, DECKLID
W
Y
BR
A
E
31
V58 CENTRAL LOCKING SYSTEM MOTOR, SLIDING DOOR


7
8
9
10
11
12
97-8577

Description	Current track
Automatic transmission console light, L19	1, 3
Automatic transmission relay, J60	16-17
Back-up light, left, M16	6
Back-up light, right, M17	9
Brake light switch, F	11, 13
Brake light, left, M9	10
Brake light, right, M10	13
Cruise control inductive sender, G38	22
Cruise control switch, E45	19-25
Cruise control, control unit, J213	19-25
Fuse, S2	11
Fuse, S15	9
Fuse, S18	20
Starter cut-out/back-up light switch, E17	6-9
Vacuum control motor, V18	24-26
Vacuum vent valve, brake, F47	15

Wire connectors

T1a — single, behind fuse/relay panel
T2 — double, behind instrument panel
T2a — double, behind instrument panel
T2b — double, behind instrument panel
T3 — three-point, near fuse/relay panel
T3a — three-point, in wire distributor, engine compartment
T4 — four-point, near cruise control main control unit
T4b — four-point, behind steering column switch cover
T6a — six-point, on taillight bulb holder, left
T6b — six-point, on taillight bulb holder, right
T7 — seven-point, in wire distributor, engine compartment
T7a — seven-point, in wire distributor, engine compartment

Ground connections

(30) — near fuse/relay panel
(63) — on taillight bulb holder, left
(64) — on taillight bulb holder, right

Welded wiring harness points

(A4) — plus connection 58b, in instrument cluster wiring harness

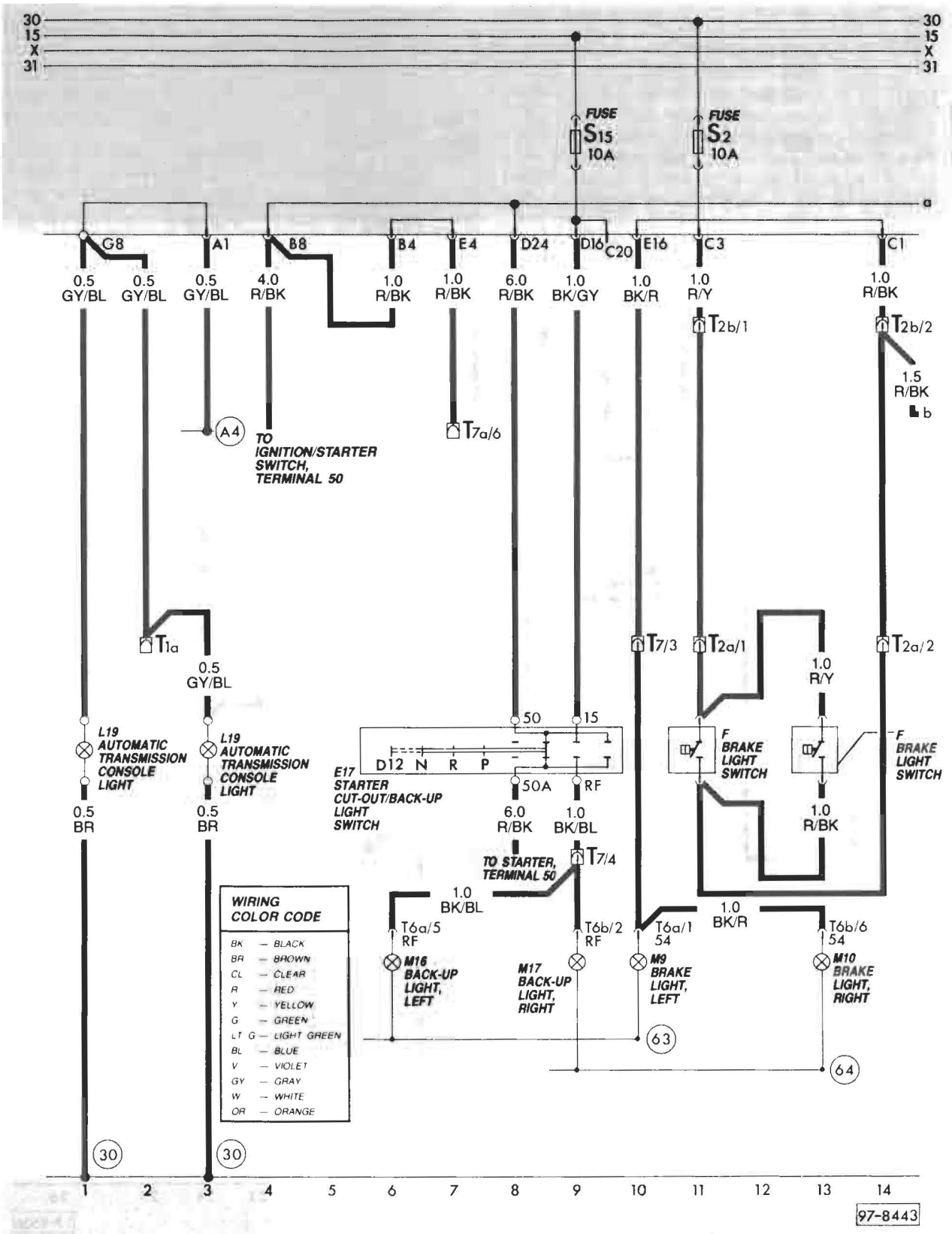
30
15
X
31
FUSE S15 10A
FUSE S2 10A
a
G8
A1
B8
B4
E4
D24
D16
C20
E16
C3
C1
0.5 GY/BL
0.5 GY/BL
0.5 GY/BL
4.0 R/BK
1.0 R/BK
1.0 R/BK
6.0 R/BK
1.0 BK/GY
1.0 BK/R
1.0 R/Y
1.0 R/BK
T2b/1
T2b/2
1.5 R/BK
b
A4
TO IGNITION/STARTER SWITCH, TERMINAL 50
T7a/6
T1a
0.5 GY/BL
T7/3
T2a/1
T2a/2
1.0 R/Y
L19 AUTOMATIC TRANSMISSION CONSOLE LIGHT
L19 AUTOMATIC TRANSMISSION CONSOLE LIGHT
50
15
E17 STARTER CUT-OUT/BACK-UP LIGHT SWITCH
D12 N R P
50A
RF
F BRAKE LIGHT SWITCH
F BRAKE LIGHT SWITCH
0.5 BR
0.5 BR
6.0 R/BK
1.0 BK/BL
1.0 R/BK
TO STARTER, TERMINAL 50
T7/4
1.0 BK/BL
1.0 BK/R
T6a/5 RF
T6b/2 RF
T6a/1 54
T6b/6 54
M16 BACK-UP LIGHT, LEFT
M17 BACK-UP LIGHT, RIGHT
M9 BRAKE LIGHT, LEFT
M10 BRAKE LIGHT, RIGHT
63
64
WIRING COLOR CODE
BK — BLACK
BR — BROWN
CL — CLEAR
R — RED
Y — YELLOW
G — GREEN
LT G — LIGHT GREEN
BL — BLUE
V — VIOLET
GY — GRAY
W — WHITE
OR — ORANGE
30
30
1 2 3 4 5 6 7 8 9 10 11 12 13 14
97-8443

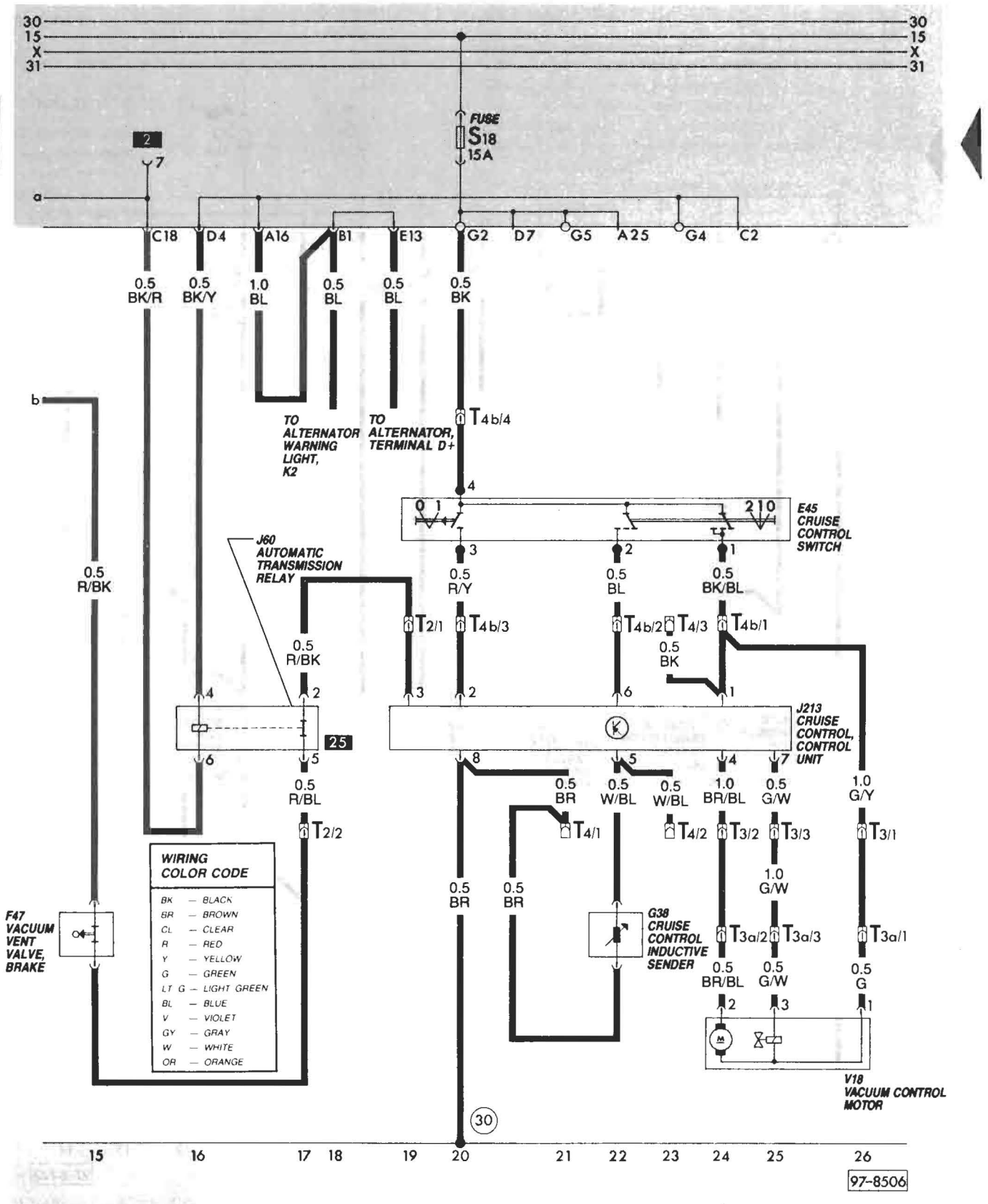
30
15
X
31
FUSE
S18
15A
C18
D4
A16
B1
E13
G2
D7
G5
A25
G4
C2
0.5 BK/R
0.5 BK/Y
1.0 BL
0.5 BL
0.5 BL
0.5 BK
TO ALTERNATOR WARNING LIGHT, K2
TO ALTERNATOR, TERMINAL D+
T4b/4
E45 CRUISE CONTROL SWITCH
J60 AUTOMATIC TRANSMISSION RELAY
0.5 R/BK
0.5 R/Y
0.5 BL
0.5 BK/BL
T2/1
T4b/3
T4b/2
T4/3
T4b/1
0.5 BK
J213 CRUISE CONTROL, CONTROL UNIT
25
0.5 R/BL
T2/2
0.5 BR
0.5 W/BL
0.5 W/BL
1.0 BR/BL
0.5 G/W
1.0 G/Y
T4/1
T4/2
T3/2
T3/3
T3/1
1.0 G/W
F47 VACUUM VENT VALVE, BRAKE
G38 CRUISE CONTROL INDUCTIVE SENDER
T3a/2
T3a/3
T3a/1
0.5 BR/BL
0.5 G/W
0.5 G
V18 VACUUM CONTROL MOTOR
WIRING COLOR CODE
BK — BLACK
BR — BROWN
CL — CLEAR
R — RED
Y — YELLOW
G — GREEN
LT G — LIGHT GREEN
BL — BLUE
V — VIOLET
GY — GRAY
W — WHITE
OR — ORANGE
30
15 16 17 18 19 20 21 22 23 24 25 26
97-8506

Description	Current track
Brake light switch, F	2-3
Brake light, left, M9	1
Brake light, right, M10	3
Cruise control inductive sender, G38	7
Cruise control switch, E45	5-9
Cruise control, control unit, J213	5-9
Fuse, S2	2
Fuse, S18	6
Vacuum control motor, V18	8-10
Vacuum vent valve, brake, F47	4
Vacuum vent valve, clutch, F36	4

Wire connectors

T2 — double, behind instrument panel
T2a — double, behind instrument panel
T2b — double, behind instrument panel
T3 — three point, near fuse/relay panel
T3a — three point, in wire distributor, eng. compart.
T4 — four point, near cruise control main control unit
T4b — four point, behind instrument panel
T6a — six point, on taillight bulb holder, left
T6b — six point, on taillight bulb holder, right
T7 — seven point, in wire distributor, eng. compart.

Ground connections

(12) — in engine compart., left side
(30) — near fuse/relay panel
(63) — on taillight bulb holder, left
(64) — on taillight bulb holder, right

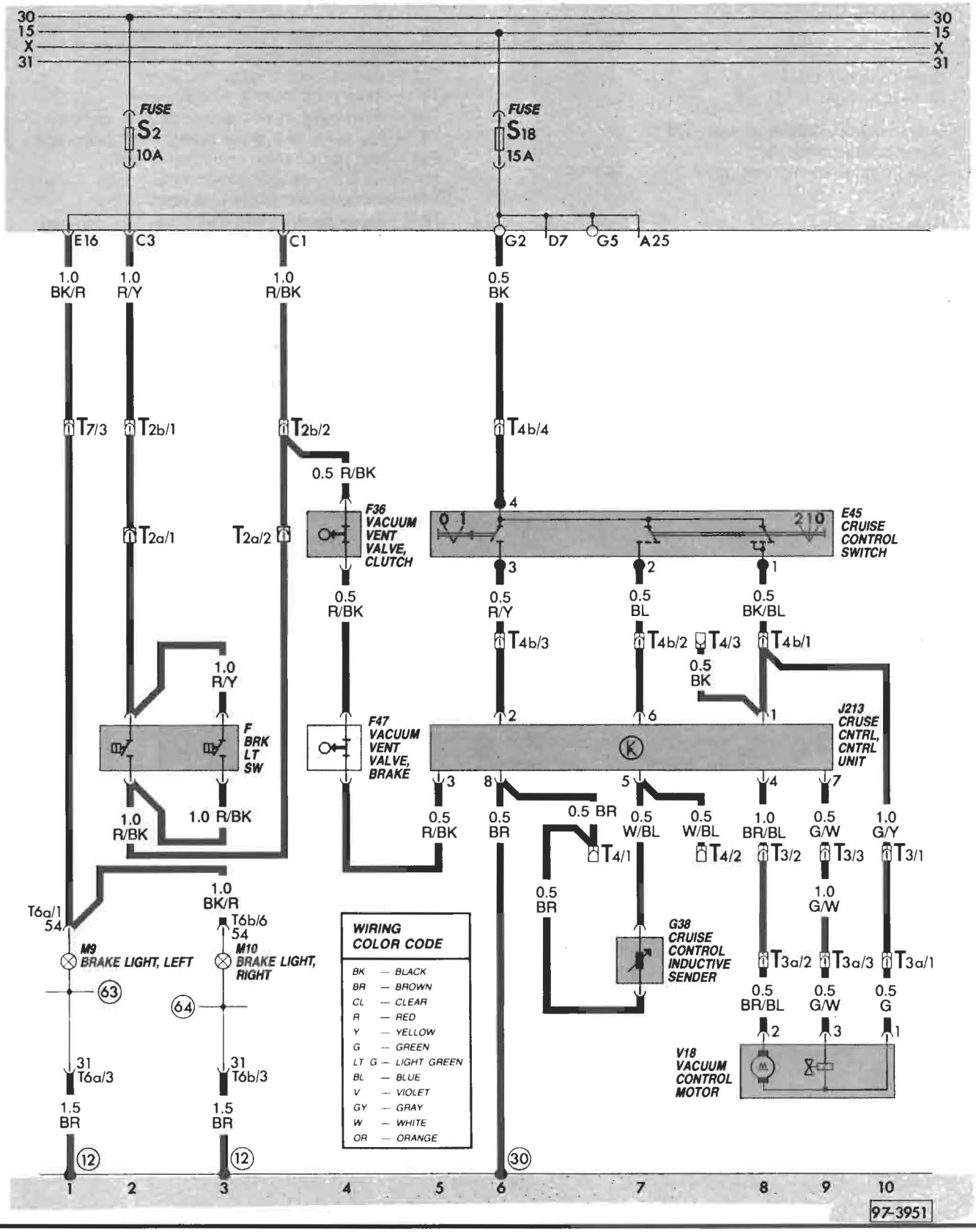
30
15
X
31
FUSE S2 10A
FUSE S18 15A
E16
C3
C1
G2
D7
G5
A25
1.0 BK/R
1.0 R/Y
1.0 R/BK
0.5 BK
T7/3
T2b/1
T2b/2
T4b/4
0.5 R/BK
F36 VACUUM VENT VALVE, CLUTCH
E45 CRUISE CONTROL SWITCH
T2a/1
T2a/2
0.5 R/BK
0.5 R/Y
0.5 BL
0.5 BK/BL
T4b/3
T4b/2
T4/3
T4b/1
0.5 BK
1.0 R/Y
F BRK LT SW
F47 VACUUM VENT VALVE, BRAKE
J213 CRUSE CNTRL, CNTRL UNIT
1.0 R/BK
1.0 R/BK
0.5 R/BK
0.5 BR
0.5 W/BL
0.5 W/BL
1.0 BR/BL
0.5 G/W
1.0 G/Y
T4/1
T4/2
T3/2
T3/3
T3/1
0.5 BR
1.0 BK/R
T6a/1 54
T6b/6 54
1.0 G/W
G38 CRUISE CONTROL INDUCTIVE SENDER
M9 BRAKE LIGHT, LEFT
M10 BRAKE LIGHT, RIGHT
T3a/2
T3a/3
T3a/1
0.5 BR/BL
0.5 G/W
0.5 G
63
64
V18 VACUUM CONTROL MOTOR
31 T6a/3
31 T6b/3
1.5 BR
1.5 BR
12
12
30
1 2 3 4 5 6 7 8 9 10
97-3951
WIRING COLOR CODE
BK — BLACK
BR — BROWN
CL — CLEAR
R — RED
Y — YELLOW
G — GREEN
LT G — LIGHT GREEN
BL — BLUE
V — VIOLET
GY — GRAY
W — WHITE
OR — ORANGE

Description	Current track
Daytime driving light relay, J89	15-17
Daytime driving lights resistor, N53	16
Fuse, S20	9
Fuse, S7	17
Fuse, S8	19
Fuse, S9	35
Fuse, S22	36
Fuse, S10	37
Fuse, S21	40
Fuse, S50	11
Headlight dimmer/flasher switch, E4	22-23
Headlight, left, L1	39, 40
Headlight, right, L2	35, 36
High-beam headlight, left, L13	37
High-beam headlight, right, L14	33
Instrument panel light dimmer switch, E20	10
License plate light, X	13-14
Light switch, E1	4-10
Load reduction relay, J59	3-5
Parking light, left, M1	25
Parking light, right, M3	32
Tail light, left, M4	42
Tail light, right, M2	41
Turn signal light, left front, M5	26
Turn signal light, left rear, M6	27
Turn signal light, right front, M7	31
Turn signal light, right rear, M8	30

Wire connectors

T1 — single, behind instrument panel, left
T2 — double, in wire distributor, engine compartment
T2a — double, behind instrument panel, left
T2b — double, behind instrument panel, left
T7 — seven-point, in wire distributor, engine compartment
T8 — eight-point, on radio
T14 — fourteen-point, on instrument cluster

Ground connections

(12) — in engine compartment, left side
(30) — near fuse/relay panel

Welded wiring harness points

(A4) — plus connection (58b), in instrument cluster wiring harness

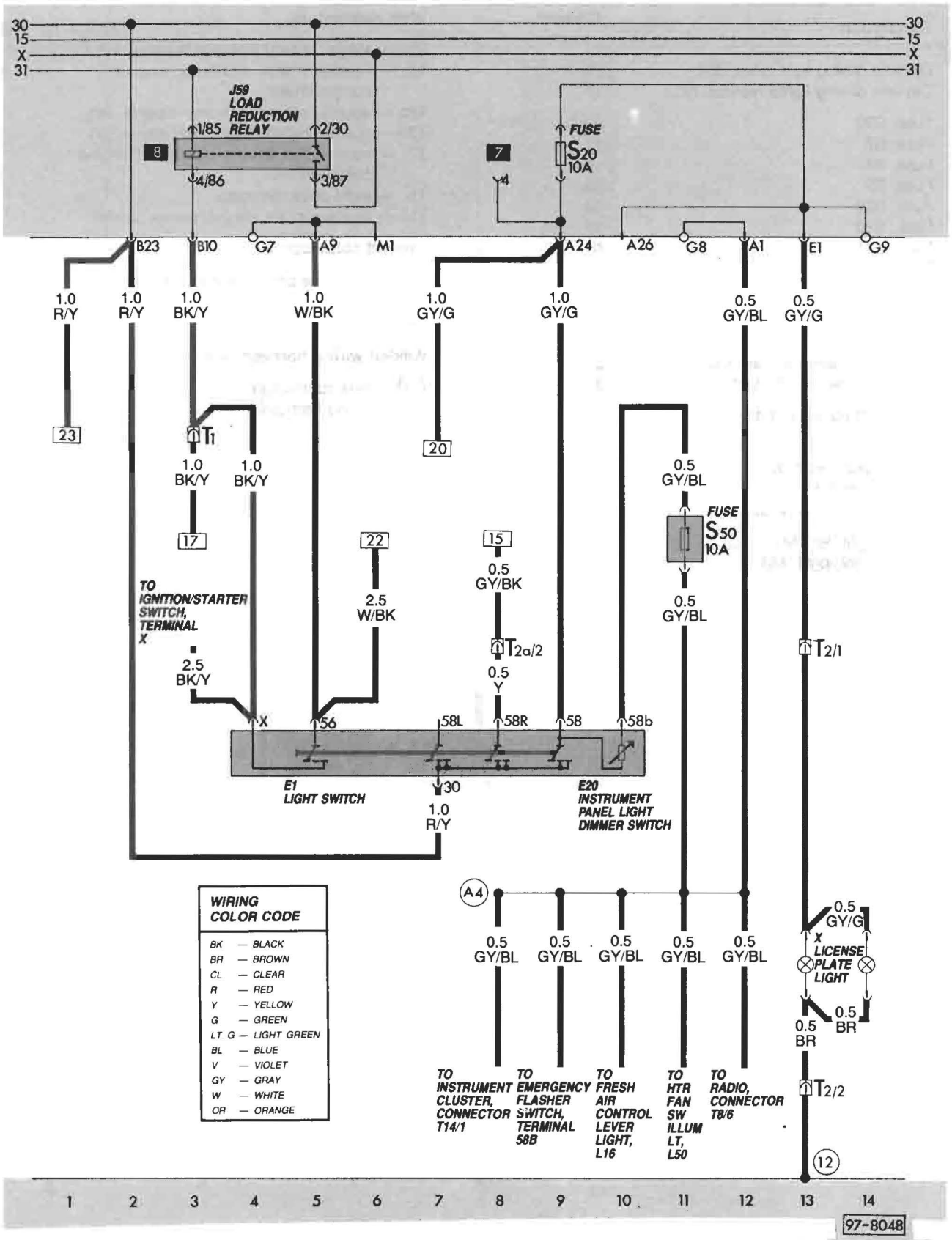

97.235 Daytime running lights

Water-cooled–Digifant to Dec. 1989

Canada

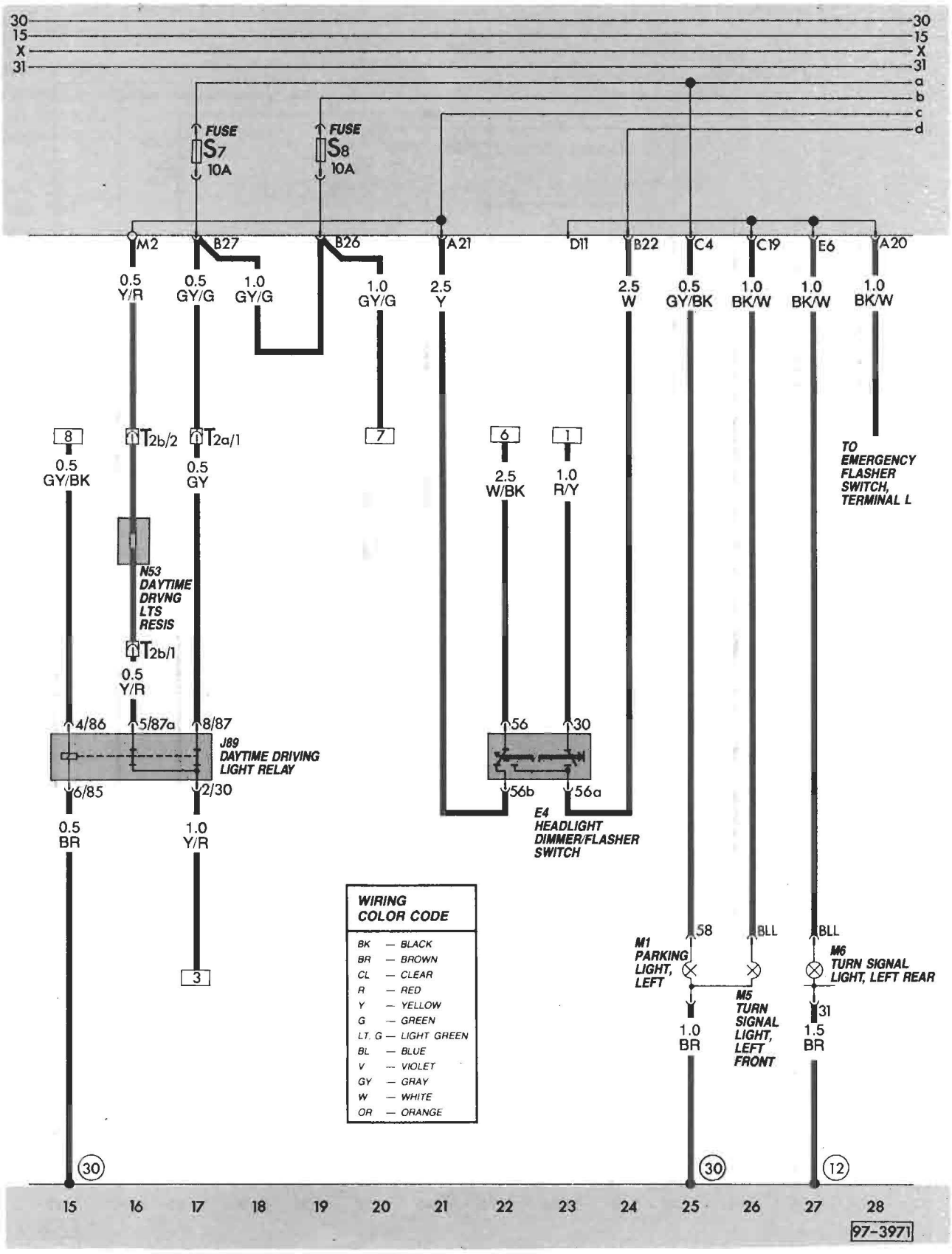

Canada

Water-cooled–Digifant to Dec. 1989

Daytime running lights **97.236**

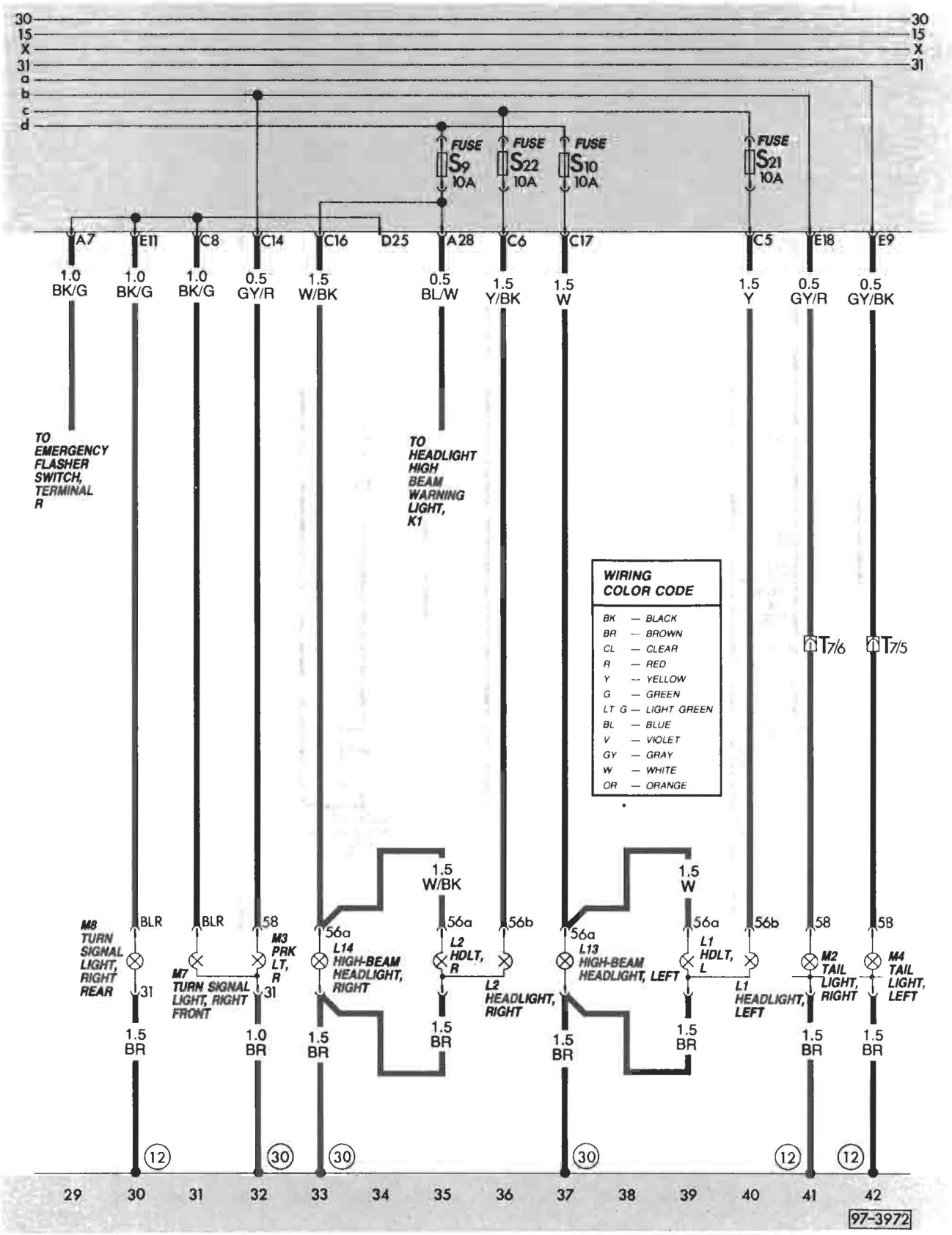

97.237 Daytime running lights

Water-cooled–Digifant to Dec. 1989

Canada

Description	Current track
Daytime running lights relay, J89	11-14
Daytime running lights relay (parking and tail lights), J277	6-8
Daytime running lights resistor, N53	19
Fuse, S7	7
Fuse, S8	9
Fuse, S20	13
Fuse, S21	22
Fuse, S22	23
Fuse, S10	25
Fuse, S9	26

Wire connectors

T1 — single, behind instrument panel, left
T1b — single, behind instrument panel, left
T2 — double, behind instrument panel, left
T2a — double, behind instrument panel, left

Ground connections

(30) — beside fuse/relay panel

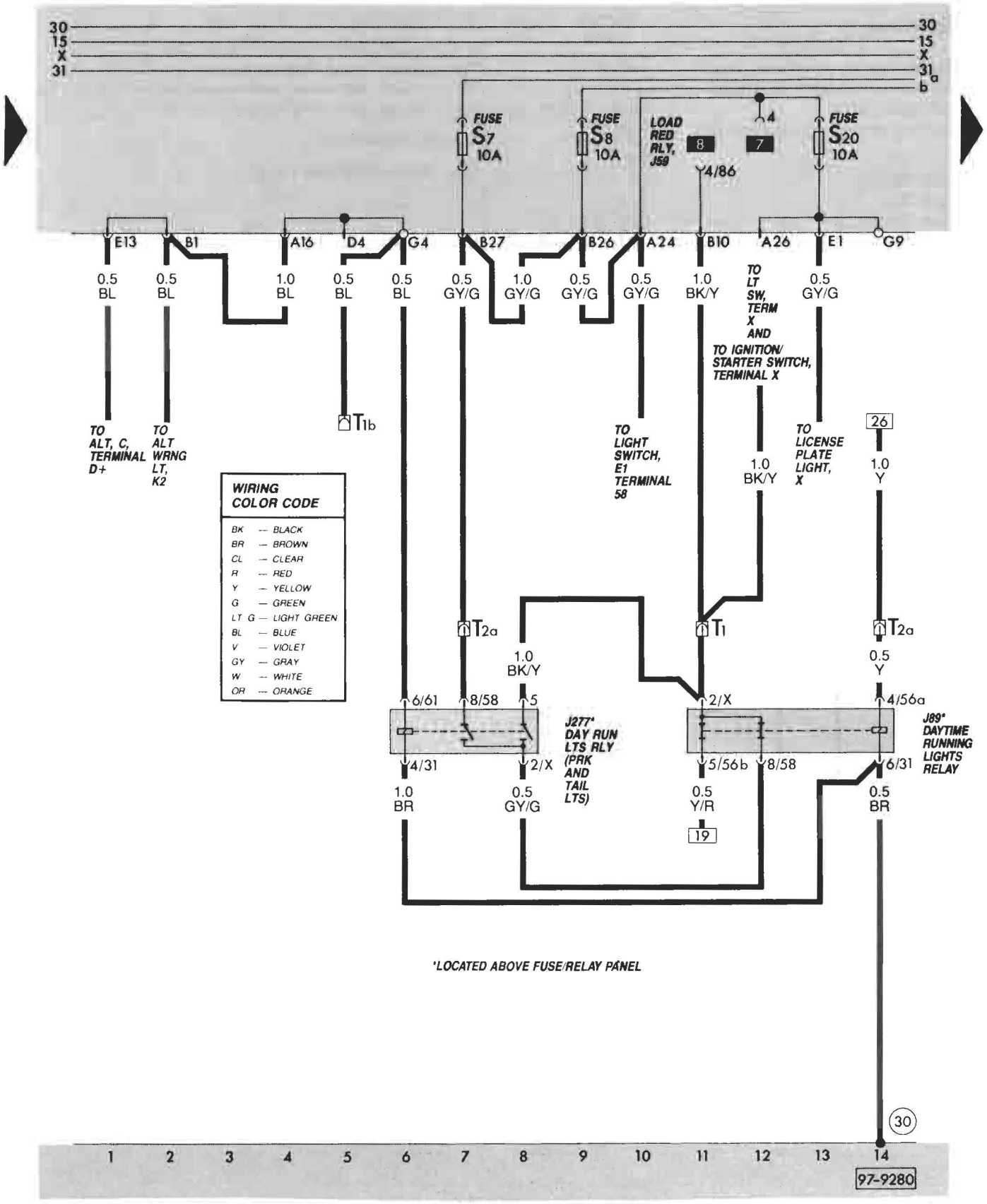

*LOCATED ABOVE FUSE/RELAY PANEL

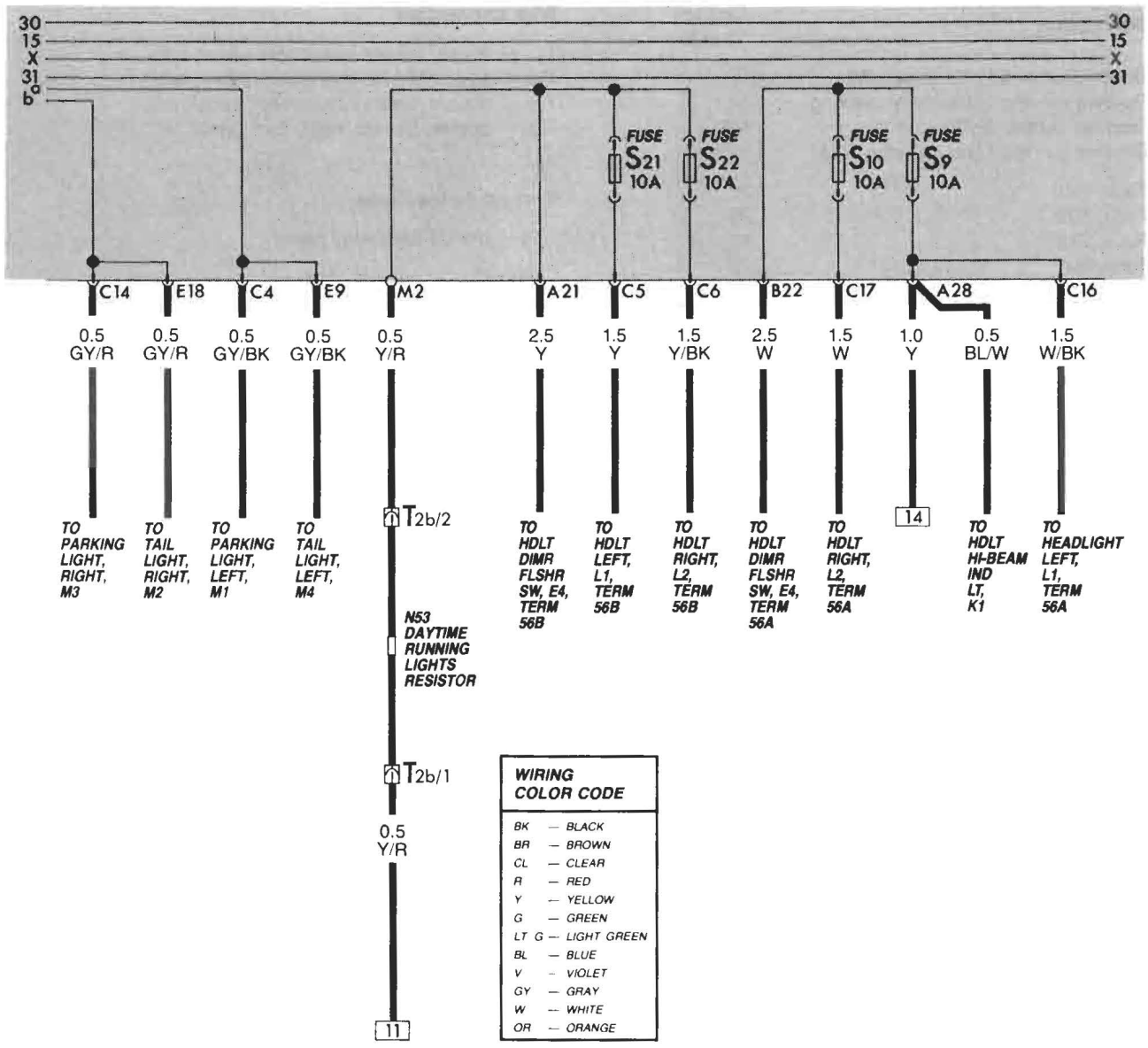
30
15
X
31
b°
FUSE S21 10A
FUSE S22 10A
FUSE S10 10A
FUSE S9 10A
C14
E18
C4
E9
M2
A21
C5
C6
B22
C17
A28
C16
0.5 GY/R
0.5 GY/R
0.5 GY/BK
0.5 GY/BK
0.5 Y/R
2.5 Y
1.5 Y
1.5 Y/BK
2.5 W
1.5 W
1.0 Y
0.5 BL/W
1.5 W/BK
TO PARKING LIGHT, RIGHT, M3
TO TAIL LIGHT, RIGHT, M2
TO PARKING LIGHT, LEFT, M1
TO TAIL LIGHT, LEFT, M4
T2b/2
N53 DAYTIME RUNNING LIGHTS RESISTOR
T2b/1
0.5 Y/R
11
TO HDLT DIMR FLSHR SW, E4, TERM 56B
TO HDLT LEFT, L1, TERM 56B
TO HDLT RIGHT, L2, TERM 56B
TO HDLT DIMR FLSHR SW, E4, TERM 56A
TO HDLT RIGHT, L2, TERM 56A
14
TO HDLT HI-BEAM IND LT, K1
TO HEADLIGHT LEFT, L1, TERM 56A
WIRING COLOR CODE
BK — BLACK
BR — BROWN
CL — CLEAR
R — RED
Y — YELLOW
G — GREEN
LT G — LIGHT GREEN
BL — BLUE
V — VIOLET
GY — GRAY
W — WHITE
OR — ORANGE
15 16 17 18 19 20 21 22 23 24 25 26 27 28
97-9281

Description	Current track
Daytime running lights relay, J89	14
Daytime running lights relay (parking and tail lights), J277	4-6
Daytime running lights resistor, N53	19
Fuse, S21	22
Fuse, S22	23
Fuse, S10	25
Fuse, S9	26
Fuse, S7	7
Fuse, S8	9
Fuse, S20	13
Load reduction relay, J59	6

Wire connectors

T1 — single, behind instrument panel, left
T1a — single, behind instrument panel, left
T2a — double, behind instrument panel, left
T2b — double, behind instrument panel, left

Ground connections

(30) — beside fuse/relay panel

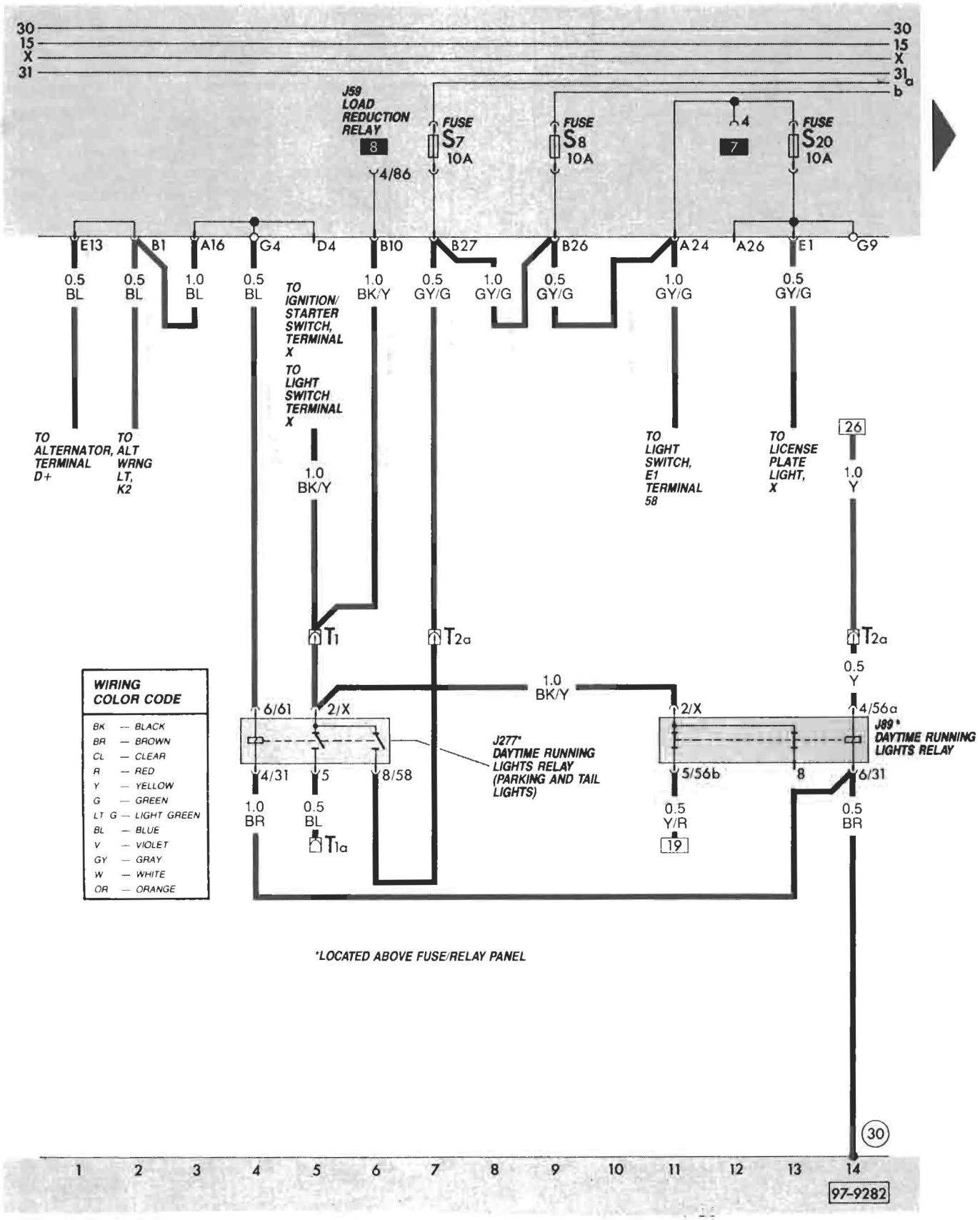

Canada

Water-cooled–Digifant from May 1990

Daytime running lights **97.242**

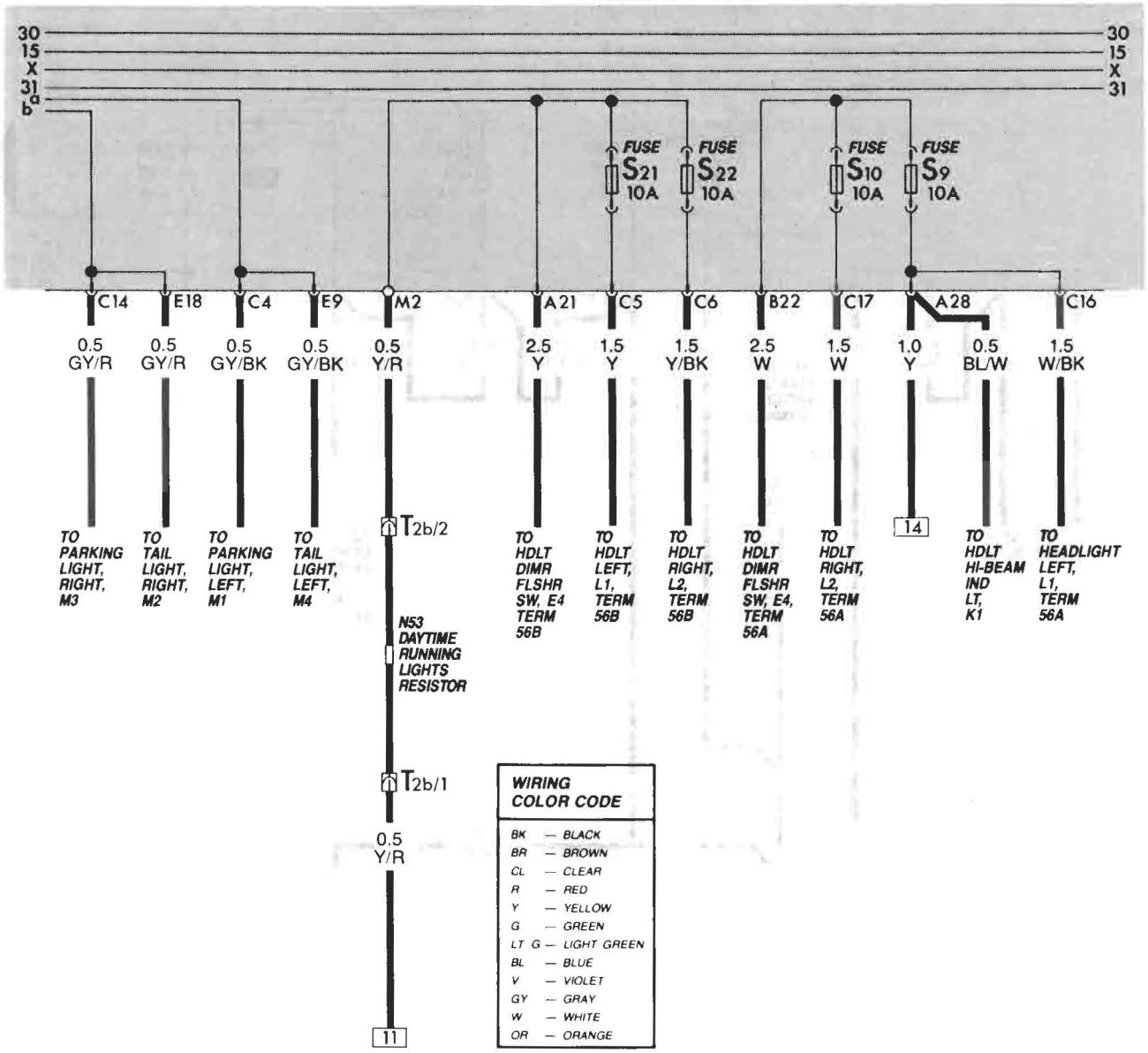
30
15
X
31
a
b
30
15
X
31
FUSE S21 10A
FUSE S22 10A
FUSE S10 10A
FUSE S9 10A
C14
E18
C4
E9
M2
A21
C5
C6
B22
C17
A28
C16
0.5 GY/R
0.5 GY/R
0.5 GY/BK
0.5 GY/BK
0.5 Y/R
2.5 Y
1.5 Y
1.5 Y/BK
2.5 W
1.5 W
1.0 Y
0.5 BL/W
1.5 W/BK
TO PARKING LIGHT, RIGHT, M3
TO TAIL LIGHT, RIGHT, M2
TO PARKING LIGHT, LEFT, M1
TO TAIL LIGHT, LEFT, M4
T2b/2
N53 DAYTIME RUNNING LIGHTS RESISTOR
T2b/1
0.5 Y/R
11
TO HDLT DIMR FLSHR SW, E4 TERM 56B
TO HDLT LEFT, L1, TERM 56B
TO HDLT RIGHT, L2, TERM 56B
TO HDLT DIMR FLSHR SW, E4, TERM 56A
TO HDLT RIGHT, L2, TERM 56A
14
TO HDLT HI-BEAM IND LT, K1
TO HEADLIGHT LEFT, L1, TERM 56A
WIRING COLOR CODE
BK — BLACK
BR — BROWN
CL — CLEAR
R — RED
Y — YELLOW
G — GREEN
LT G — LIGHT GREEN
BL — BLUE
V — VIOLET
GY — GRAY
W — WHITE
OR — ORANGE
15 16 17 18 19 20 21 22 23 24 25 26 27 28
97-9281

Description	Current track
Driver's seat heater control unit, J131	3-6
Driver's seat temperature sensor, G59	3
Fuse, S18	6
Fuse, S50	1
Heat element, driver's backrest, Z7	5
Heat element, driver's seat, Z6	4
Heat regulating switch, driver's seat, E94	2-4
Seat heater switch indicator light, L44	2-4

Wire connectors

T1 — single, behind fuse/relay panel
T1a — single, behind fuse/relay panel
T1b — single, behind instrument panel, left
T2 — double, behind instrument panel, left
T6 — six-point, under driver's seat

Ground connections

(30) — near fuse/relay panel

Welded wiring harness points

(A4) — plus (+) connection, terminal 58b in instrument panel wiring harness

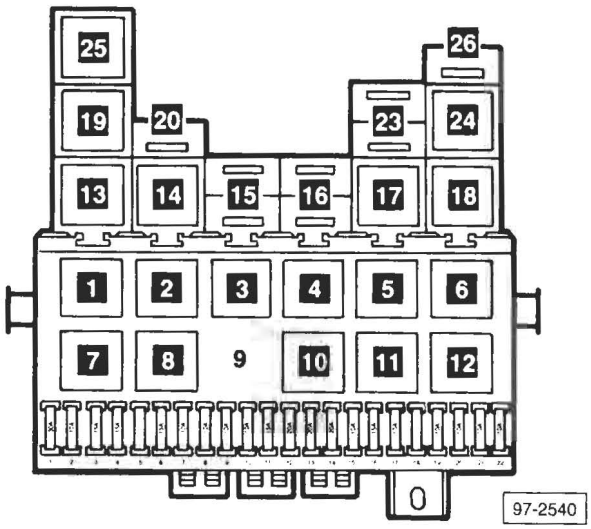

Fuse/relay panel

16 — Fuse S50, terminal 58b 10A
17 — Driver's seat heater control unit

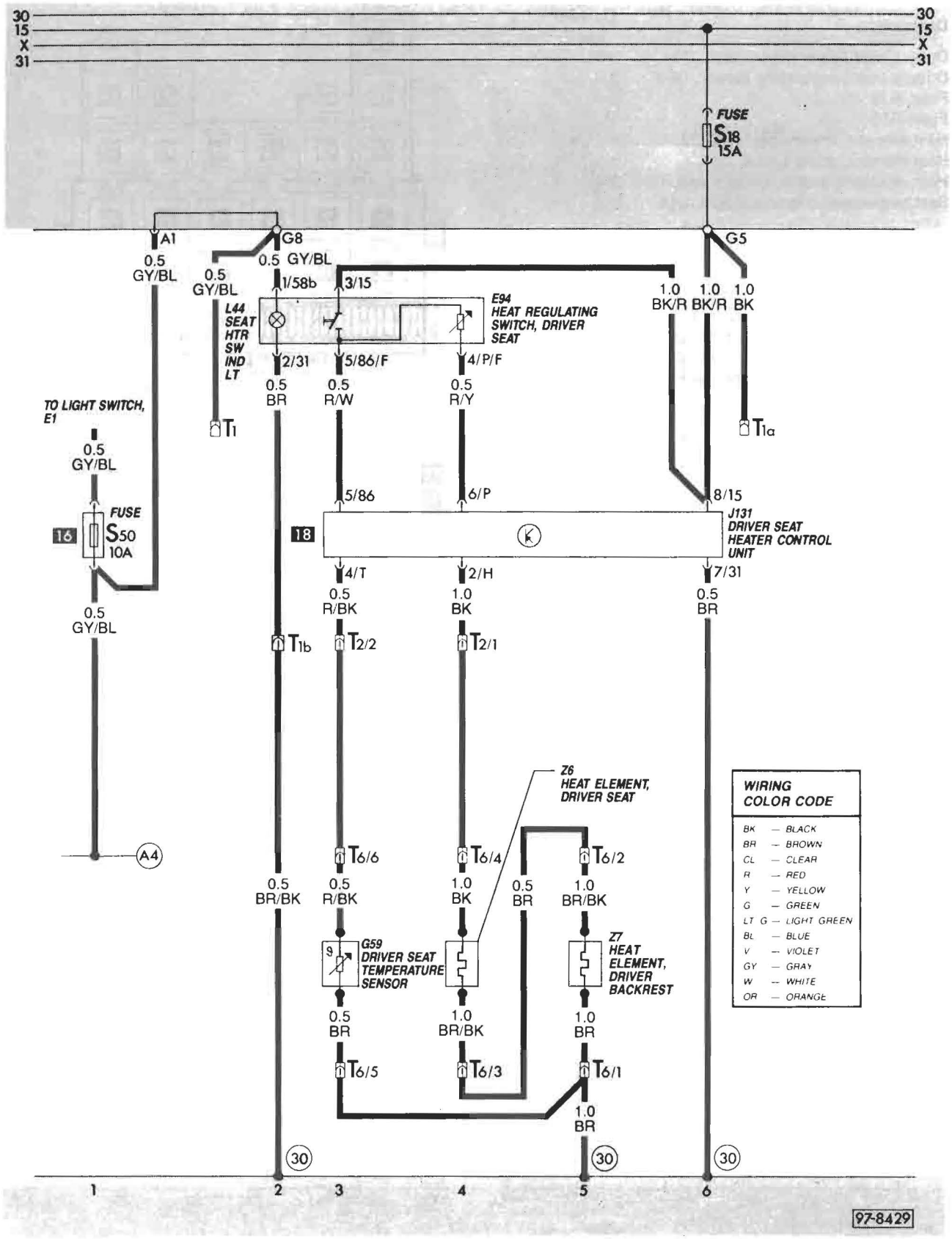

97.245 Heated driver's seat

Water-cooled–Digifant from 1990 | **Canada**

Description	Current track
Antenna, R11	5
Fuse, S3	7
Radio, R	2-10
Speaker, left front, R2	3
Speaker, left rear, R4	6
Speaker, right front, R3	4
Speaker, right rear, R5	7

Wire connectors

T2 — double, behind instrument panel, left
T2a — double, behind instrument panel, right
T2b — double, behind instrument panel, left
T8 — eight-point, on radio
T8a — eight-point, on radio
T14 — fourteen-point, on instrument cluster

Ground connections

(45) — behind instrument panel, center

Welded wiring harness points

(A4) — plus connection (58b), in instrument panel wiring harness

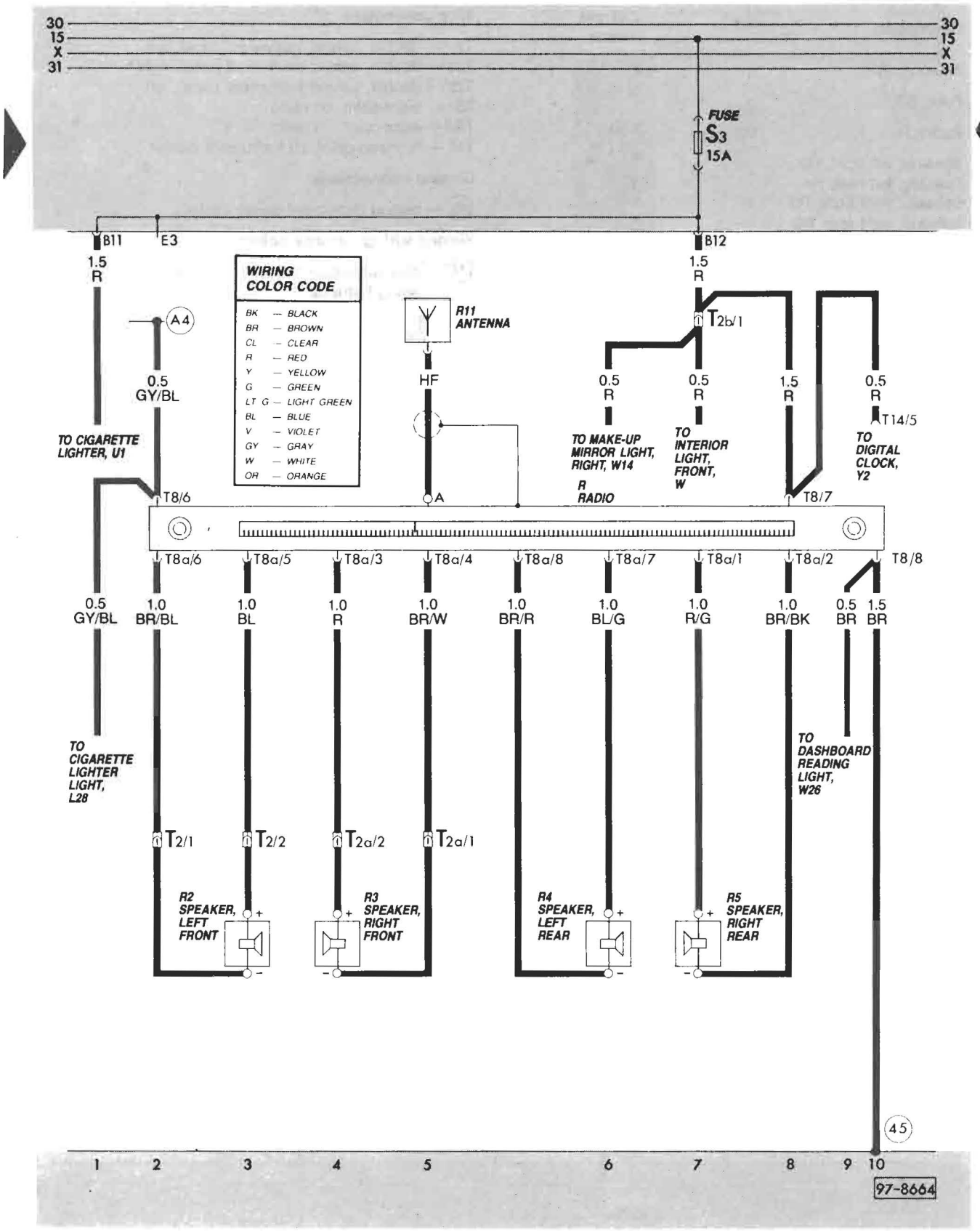

97.247 Stereo radio with 4 speakers

Water-cooled–Digifant from 1990

Appendix

Index

Do-it-yourself Service
— Changing a wheel 21
— Emergency starting 25
— Fuses 22
— Headlight adjustment 25
— Jack and tools 20
— Replacing bulbs 23
— Spare wheel 20

Technical Data
— Capacities 27
— Engine 27
— Vehicle identification 26

Vehicle Care
— Air cleaner 10
— Battery 14
— Brake fluid 13
— Cleaning products 3
— Cooling system 11
— Corrosion protection 5
— Engine compartment 6
— Engine oil 7
— Engine oil filter 9
— Exterior 3
— Fuel filter (diesel) 10
— Fuel supply 1
— Interior 4
— Lubricants 7
— Maintenance 5
— Power steering 10
— Replacing wiper blades 16
— Tires/Wheels 17
— V-belt 12

Lubrication, Emissions and Vehicle Maintenance Schedules
— Air-cooled, Water-cooled and Diesel models 1982-1985 28
— Water-cooled models from 1986 32

FUEL SUPPLY

Your vehicle is equipped with a catalytic converter and requires unleaded fuel.

For maximum engine performance, unleaded fuel with an octaine rating of 91 RON, which corresponds to an anti-knock index (AKI) of 87, is recommended.

Do not use leaded gasolines.

Deposits from leaded gasolines deactivate the catalytic converter and thus defeat its purpose to control exhaust emissions.

Unleaded fuels may not be available outside the continental USA and Canada. Therefore, we recommend you do not take your vehicle to areas or countries where unleaded fuel may not be available.

Octane rating

Octane rating indicates a gasoline's ability to resist detonation. Therefore, buying the correct octane gas is important to prevent engine "knock", which reduces performance and may cause engine damage.

Under high load operating conditions, unleaded premium gasoline may be used.

The 91 RON octane rating which you will find above the filler neck is based on the research method. The AKI octane rating unsually displayed on USA gasoline pumps is calculated as follows: Research octane number plus motor octane number, divided by 2.

Regular fuels have an octane rating ranging from 91 to 95 **RON** (Research Octane Number) or 87 to 91 AKI.

Do not use any fuel with octane ratings lower than 91 RON or 87 AKI.

Gasolines containing alcohol

Gasoline containing alcohol is available at gas stations in some areas. The gas pump may not be labeled to identify that alcohol is present in the gasoline. If it is labeled, it may not identify what amount and type(s) of alcohol are used. We recommend you use quality gasoline that is **NOT** blended with alcohol. The use of fuel containing alcohol can cause loss of fuel economy and driveability and performance problems. If these problems are experienced, we recommend you switch to another brand of gasoline.

Seasonally adjusted gasoline

Many gasolines are blended to perform especially well for winter or summer driving. During seasonal change-over, we suggest that you fill up at busy gas stations where the seasonal adjustment is more likely to be made in time.

Gasoline additives

A major concern among many auto manufacturers is carbon deposit build-up caused by the type of gasoline you use.

Although gasolines differ from one manufacturer to another, there is a common thread. All gasolines contain properties that can cause deposits to collect on essential engine components, specifically fuel injectors and intake valves. Although most gasoline brands include additives to keep engine and fuel systems clean, they are not equally effective.

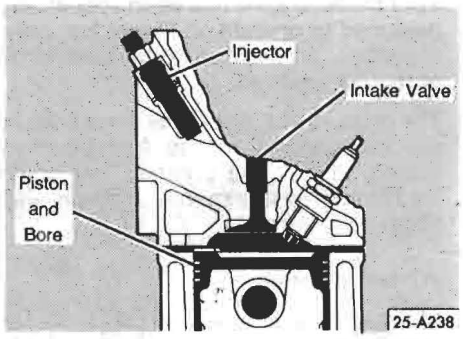

After an extended period of using inadequate fuels, built-up carbon deposits can rob your engine of peak performance. And carbon deposits like those in the illustration can lead to other engine performance problems such as:

- unstable idling
- surging
- misfiring
- power loss
- engine run-on
- engine pinging or knocking

If these problems continue over a long period of time, engine damage can be a result.

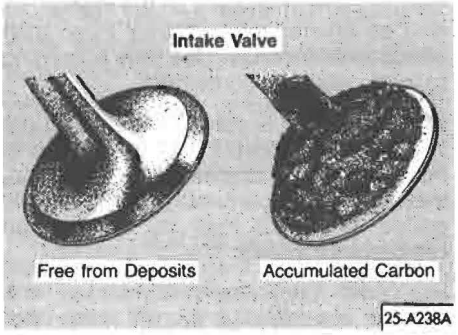

Damage or malfunction due to poor fuel quality is not covered by the Volkswagen New Vehicle Limited Warranty.

Recent fuel developments

Over the past few years, more manufacturers have been advertising detergent additives in their gasoline. These additives are primarily intended to keep fuel injectors clean.

However, they are not all equally effective in reducing carbon deposit build-up on intake valves. We are aware that, as of the time of printing, some manufacturers

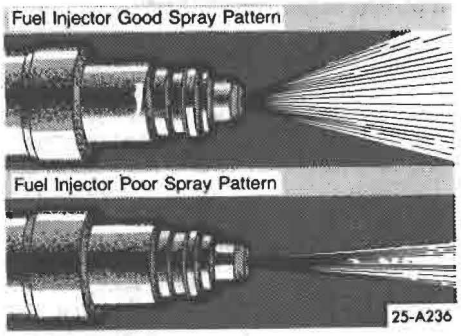

advertise and sell gasoline that contains the proper deposit control additives that will keep intake valves and injectors clean.

To assure the long term performance of your car's engine, you should use gasoline brands that include these deposit control additives.

If gasolines with additives are not available, contact your Volkswagen dealer about proper fuel additives.

If wrong fuel was put into your tank

Premium gasoline instead of regular

Your engine runs equally well on premium gasoline, however neither fuel consumption nor engine output are likely to be affected.

Regular gasoline with RON/AKI rating (lower than 91 RON or 87 AKI)

Your engine will run but avoid full power as engine can be damaged. Fill up with correct fuel as soon as possible.

Diesel fuel instead of gasoline

Your gasoline engine must not be started with Diesel fuel in the tank. In such case the fuel tank must be drained while observing all environmental and fire hazard precautions.

Leaded instead of unleaded gasoline

Do not drive your car. Have your fuel tank drained immediately as otherwise the emission control system will be damaged.

The fuel system must be drained while observing all environmental regulations, it is best to have this performed by your Volkswagen dealer.

Diesel engine: Diesel Fuel No. 2

Service stations offering Diesel fuel are generally located on truck routes of major highways Directories of Diesel fuel stations are usually sold at Diesel fuel stations.

Some U.S. states require permits to purchase Diesel fuel. Check with your State Motor Vehicle Department.

Diesel fuel may not be available outside the continental U.S. and Canada, we recommend you do not take your vehicle to countries where Diesel fuel may not be obtainable.

Your Diesel engine has been specifically designed to operate on Diesel fuel only. Therefore, do not use home heating oil or regular gasoline.

The properties of these fuels may cause serious damage to the fuel injection system and to the engine. This could lead to additional expense and may also affect your warranty.

Winter operation

At temperatures below 20° F (−7° C), Diesel Fuel No. 2 loses its fluidity due to wax separation, which may clog the fuel filter or tank strainer and keep the engine from running.

If you expect temperatures below 20° F (−7° C):

■ Use Diesel Fuel No. 1, if available in your area.

■ If Diesel Fuel No. 1 is not available, ask your fuel dealer whether his Diesel Fuel No. 2 is sufficiently winterized for the prevailing temperatures.

■ As a measure of precaution, add a commercially available Diesel Fuel flow improver (pour point depressant) to your Diesel Fuel. Because of the many different flow improvers on the market, as well as differences in Diesel Fuel, their effectiveness varies. Use only according to instructions on containers.

■ If winterized Diesel Fuel No. 2 is not available, mix Diesel Fuel No. 2 with up to 50 % Kerosene. Engine power may drop, therefore keep percentage of kerosene added to Diesel Fuel as low as the temperature allows.

Temperature	Diesel Fuel No. 2	Kerosene
20° to 14° F (-7° C to -10° C)	75 %	25 %
below 14° F (-10° C)	50 %	50 %

■ Only if neither Diesel Fuel No. 1, winterized Diesel Fuel No. 2, nor Kerosene are available, use up to 30 % leaded or unleaded gasoline.

■ **Do not use Premium gasoline.**

■ **Mixing Diesel Fuel No. 2 with Kerosene (or gasoline) must be done before wax starts to separate. Later mixing may be effective in the fuel tank but not in the rest of the fuel system.**

■ **Always add the correct amount of Kerosene (or gasoline) to the fuel tank first, and then fill up with Diesel Fuel No. 2.**

■ **Do not use "starting assist fluids", they will cause engine damage.**

■ **Do not use fuel line anti-freeze offered for gasoline engines.**

It is normal that the engine noise level (dieseling) is louder during the warm-up period in winter. It is also normal that whitish-blue smoke may be emitted from the exhaust after starting and during warm-up. The amount of smoke depends on the outside temperature.

Do not let your Diesel engine idle unnecessarily after a cold start-up. Driving off slowly will shorten the warm-up period.

WARNING

■ **Do not use "starting assist fluids". They may be potentially explosive or cause a "run-away" engine condition. This could result in serious engine damage and personal injury.**

■ **Any amount of gasoline added to Diesel fuel makes the mixture as flammable as pure gasoline.**

■ **Handle all fuels in well ventilated areas. Do not smoke or have anything in the area that can ignite fuel.**

■ **Never carry additional fuel containers in your vehicle. Such containers, full or emply, may leak, cause an explosion, or result in fire in case of a collision.**

CLEANING PRODUCTS

Any automobile is subjected to abuse from industrial fumes, corrosive road salt, abandoned lollipops, muddy dog feet, etc.; to name just a few. A well cared for Volkswagen can look like new many years later. Regular and correct care will contribute to maintaining the beauty and the value of your Volkswagen.

Your Volkswagen dealer has a number of car-care products and can advise you which ones to use for cleaning the exterior and interior of your vehicle.

Whether you use Volkswagen recommended products or other, commercially available cleaning agents, make sure first of their correct application.

WARNING

- **Cleaning agents may be poisonous. Keep them out of the reach of children.**
- **Observe all caution labels.**
- **Always read directions on the container before using any product.**
- **Most chemical cleaners are concentrates which require dilution.**
- **Only use spot removing fluids in well ventilated areas.**
- **Do not use gasoline, kerosene, naphtha, nail polish remover or other volatile cleaning fluids. They may be toxic, flammable or hazardous in other ways.**

EXTERIOR

Washing and waxing

The paint on your Volkswagen is very durable but must be protected from losing its luster due to outside influences. Therefore, wash and wax your Volkswagen often. The longer the dirt is left on the paint, the greater the risk of damaging the glossy finish, either by scratching if the dirt is rubbed into the paint, or simply by the chemical effect dirt particles have on the paint surface.

Do not wash or wax in direct sunlight, or when the sheet metal is hot. Do not use hot water. Lukewarm to cool water is kinder to the paint.

WARNING

- **Do not wash, wax or dry the vehicle with the engine running.**
- **Do not clean the underside of chassis, fenders, wheel covers, etc., without protecting your hands and arms. You may cut yourself on sharp-edged metal parts.**
- **Moisture, ice and road salt on brakes may affect braking efficiency. Test the brakes carefully after each vehicle wash.**

Do not aim the water jet directly at door, hatch or rear lid locks. Tape the key holes to prevent water from seeping into the lock cylinders. Water in lock cylinders should be removed with compressed air. To prevent locks from freezing in the winter, squirt glycerine or lock de-icer into the lock cylinders. **Do not use any solution that can damage the body paint.**

Use plenty of water, a car-wash and wax solution and a soft sponge or hose brush. Begin by spraying water over the dry surface to remove all loose dirt before applying the car-wash and wax solution. Use plenty of water to rinse the vehicle off. Wipe everything dry with a chamois to avoid water spots.

When having your vehicle washed at an automatic car wash, be sure to observe all the precautions suggested by the establishment.

The underside of the vehicle picks up dirt and road salt. To guard against corrosion, it is important to remove mud, debris and road salt from the underside with a powerful jet of water. Be sure to include the wheel housings, bumpers, muffler, tailpipe and brackets. This should be done twice a year and is best accomplished after the vehicle has been driven through a heavy rain. Let engine and exhaust cool down before washing.

Waxing is not really needed when you have used a car-wash and wax solution. If you do not use a car-wash liquid with wax, apply wax to preserve the natural shine of the body paint. To obtain a long lasting finish, apply hard wax. Wax again when water remains on the surface in large patches instead of forming beads and rolling off.

This will make dirt easier to remove and will prevent the paint from being damaged from industrial dust, tree sap or bird droppings.

Use a polish when it becomes evident that waxing no longer accomplishes the job. If the polish you are using does not contain wax, apply hard wax after polishing.

Tar or oil

Do not allow tar or oil to remain on the paint. Remove as soon as possible with a cloth soaked with a special paint cleaner. If you do not have a tar or oil remover, you may substitute with turpentine. After applying a cleaning fluid, always wash with a lukewarm soap water solution and apply a new wax coat.

Insects

Remove as soon as possible with a lukewarm soap water solution or insect remover.

Tree sap

Do not allow tree sap or bird droppings to harden on the paint. Remove with a lukewarm soap water solution.

Windows

Clean all windows regularly to remove road film and car-wash wax buildup. Use a lukewarm soap water solution or an alcohol base commercial window cleaning agent. If a chamois is used for polishing the glass, it should exclusively be used for that purpose.

Also, be sure to clean all windows regularly on the inside.

Use a plastic scraper to remove snow and ice from windows and mirrors. To prevent dirt from scratching the window, always scrape in a forward direction – never back and forth.

Wiper blades

Always loosen frozen wiper blades from glass otherwise they may tear.

Clean wiper blades regularly with an alcohol base solution. If necessary, use a sponge or a brush to remove accumulated road film. To assure good visibility, replace wiper blades at least once a year, or more often when wiping becomes streaky.

Weatherstrips

Keep silicone sprays off the windshield to avoid wiper smear in rain.

To seal properly, weatherstrips around hood, hatch, windows, doors, etc., must be pliable. Spray with silicone or coat with talcum powder or glycerine to retain flexibility of the rubber and to protect against freezing in the winter.

Sliding roof quide rails

To assure that the sliding roof* function properly, clean the guide rails and lubricate with silicone spray at least once a year. See your Volkswagen dealer for correct procedures and lubricant.

Touch-up paint

Your Volkswagen dealer has touch-up paint for minor scratches and stone chips. Scratches should be touched up soon after they occur to prevent corrosion. If corrosion formation becomes visible, however, a simple touch-up job will not suffice.

The affected surface must be smoothed with sand paper and covered with an anti-rust primer, before restoring the painted finish.

The number for the original vehicle paint can be found on the vehicle identification label.

Dull finishes and plastics

Plastic parts, such as light bulb lenses, decorative stripes, panels, bumpers, etc., will come clean with regular washing. Should additional cleaning or spot removal be necessary, use a soft brush or cloth soaked with a mild detergent solution. Then rinse thoroughly and immediately with clear water.

Do not use anything which could mar the plastic or dull finished surface, such as wax, polish, abrasive detergents or chemical cleaning solvents.

Steel wheels

Always include the hub caps and wheel rims when washing your vehicle to remove road dirt, salt sprays and brake dust. If necessary, use a commercial wheel cleaner to remove accumulated brake dust. Paint scratches should be touched up to prevent corrosion.

Light alloy wheels

To preserve the decorative appearance of the light aluminium cast, some special care is necessary. In addition to road dirt and salt sprays, brake metal dust is also corrosive. If left on too long, brake metal dust can cause pitting. Wash the wheels with a sponge or hose brush every other week. Road salt should be removed weekly with an acid free cleaning solution. Every three months (after regular cleaning) the wheels should be coated with petroleum jelly or car wax. Rub it in firmly with a soft cloth. Never use abrasive or metal polishing cleaning agents.

Remember that moisture, ice and road salt on brakes may affect braking efficiency. Test the brakes carefully after each washing.

Sliding door

The sliding door mounting points, the guide tracks and the roller guides should be lubricated regularly and as often as necessary.

Bright metal trim

Bright or black anodized trim will come clean with regular washing. To protect metal trim, use car wax. Remove spots or dirt from chrome and stainless steel with a chrome cleaner. Apply a chrome polish for continued luster and protection.

INTERIOR

Glass

Use the same cleaning agents as for exterior and polish dry.

Fabric

Use a vacuum cleaner or a soft bristle brush to remove dust and loose dirt from carpeting, upholstery, headliner and other trim. Dirt stains can usually be removed with a lukewarm soap water or all purpose cleaner solution, or a dry foam cleaner. For greasy, oily and other stubborn stains, use a spot remover. Do not pour the liquid on the fabric. Dampen a clean cloth and rub carefully, starting at the edge and working inward.

Plastic, vinyl and leather/leatherette

Use a clean, damp cloth or sponge to keep this trim free from dust. For other soilage, use a lukewarm solvent free all purpose cleaning solution or a mild saddle soap for vinyl and leather trim. Remove water spots and soap traces with a clean, damp cloth or sponge. Use a clean, soft cloth to rub dry.

Grease, tar or oil stains can be removed with a clean cloth or sponge soaked with all purpose cleaner or with a solvent type vinyl or leather cleaning agent.

Occasionally apply a colorless vinyl or leather preservative to retain the material's luster and pliability.

Safety belts

Keep belts clean. Dirty belts may not retract properly. Do not remove belts from the vehicle. Do not use chemical cleaning agents, bleach or dyes. They contain corrosive properties which will weaken the webbing. Do not allow inertia reel safety belts to retract before they are completely dry.

For cleaning, use a mild soap water solution. Let belts dry out thoroughly and away from direct sun light.

Use the opportunity to inspect the belts for damage. If you discover damage, see your dealer.

* where applicable

CORROSION PROTECTION

The transmission, front and rear axle assembly surfaces have been treated at the factory with a wax based coating for protection against corrosion. However, we recommend to have the and the underside inspected twice a year for any damage to the protective coating preferably before and after the winter season. Have necessary repairs done as soon as possible. See your dealer for correct procedures and materials.

WARNING

Do not apply additional undercoating or rustproofing on or near the exhaust manifold, exhaust pipes, catalytic converter or heat shields. During driving, the substance used for undercoating could overheat and cause a fire.

Engine Compartment

When washing the engine compartment, only use commercially available grease cutting solvents made especially for this purpose. Carefully follow directions printed on the container by the manufacturer.

WARNING

Never use gasoline, Diesel fuel or solvents which could damage rubber parts or painted surfaces and could cause a fire.

Chassis

The lower body shell of your Volkswagen is thoroughly protected against corrosion. However, it is recommended to have the underside inspected twice a year. Any detected damage to the undercoating, due to road hazards, should be repaired promptly. Oil based protective sprays must not be applied. Only tar or wax based anticorrosion protectors are compatible with the factory applied undercoating. Before application, road dirt, salt spray deposits and oily substances must be removed.

Whenever the lower body shell, axle, transmission or engines assemblies have been repaired, the lost anti-corrosion coating of the affected surfaces should be reapplied.

Your Volkswagen dealer has the appropriate materials, the necessary equipment and is familiar with the application procedure. Therefore, any additional corrosion protection work should be performed by a Volkswagen dealer.

Body cavity sealing

All body cavities which could be affected by corrosion have been given a thorough protection at the factory.

This sealing does not require any inspection or additional treatments. If any wax should seep out of the cavity when the ambient temperature is high, it can be removed with a plastic scraper and a suitable solvent. Be sure to observe all safety and environmental regulations.

MAINTENANCE

Your vehicle has been designed to help keep maintenance requirements to a minimum. However, a certain amount of regular maintenance is still necessary to assure your vehicle's safety, economy and reliability.

Maintenance Service is required every 12 months or every 15,000 miles (24,000 kilometers), whichever occurs first.

In addition, it is necessary to perform an oil change 6 months after each Maintenance Service, or after each 7,500 miles (12,000 kilometers) whichever occurs first.

The first oil change must be performed 6 months after the delivery of the vehicle or after 7,500 miles (12,000 kilometers).

Under difficult operating conditions, for example at extreme low outside temperatures or in very dusty regions, etc., some service work should be performed between the intervals specified.

This applies particularly to:

- oil changes, and
- cleaning or replacing the air filter.

The maintenance work should be performed by Volkswagen dealers because they have the expertise, the workshop facilities and the special tools required. It is important that this work is performed according to the manufacturer's instructions.

Proof of servicing in accordance with the maintenance schedule may be a condition for upholding a possible warranty claim made within the warranty period.

Safety and environmental concerns place very strict limits on the nature of repairs and adjustment on engine and transmission parts which an owner can perform. **Tampering with safety-related parts can endanger you as well as other motorists.**

Always observe environmental regulations when disposing of old engine oil, used brake fluid, dirty engine coolant, spent batteries or worn out tires.

LUBRICANTS

Engine

Your engine was factory filled with an all-season high quality engine oil. If you need to add oil between oil changes use any high quality petroleum or synthetic based oil with correct specifications.

The following term must appear on the oil container singly or in combination with other designations: "API Service SF or SG" (Gasoline engine) or "API Service CD" (Diesel engine).

Engine oils are graded according to their viscosity. The proper grade to be used in your engine depends on existing climatic or seasonal conditions.

Refer to the temperature chart when selecting engine oil. As temperature ranges of the different oil grades overlap, brief variations in outside temperatures are no cause for alarm. It is also permissible to mix oil of different viscosities if you find it necessary to add oil.

Gasoline engine:

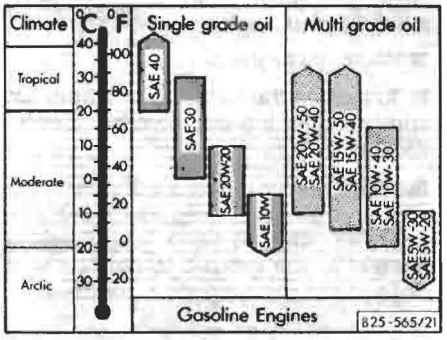

Diesel engine:

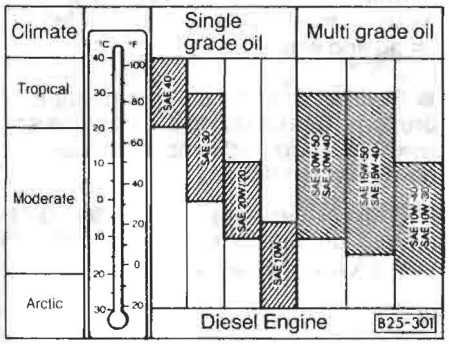

When using SAE 10 W or SAE 5 W-20 or SAE 5 W-30 engine oil, avoid high speed long distance driving if outside temperature rises above the indicated limits.

Engine Oil Identification Symbol

Select an oil for your vehicle which conforms to the standards of the American Petroleum Institute (API). A symbol has been added to the top of some oil containers to help in selecting the correct oil.

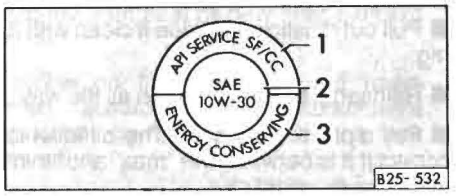

(1) The top portion indicates the oil quality by API designations.
(2) The center portion shows the SAE oil viscosity grade.
(3) The lower portion indicates that the oil has fuel saving capabilities.

Transmission

Manual transmission:

Hypoid oil SAE 80 (Mil-L-2105 or API/GL 4).

Automatic transmission:
ATF Dexron® or Dexron II® for torque converter and hypoid oil SAE 90 (Mil-L-2105 B or API/GL 5) for final drive.

Front axle differential (Syncro only)

Hypoid oil SAE 80 (Mil-L 2105 B or API/GL 4) or synthetic transmission oil G 50, SAE 75 W-90.

The lubricant used does not have to be changed.

Should the need arise to add oil, it should only be done with the necessary workshop equipment.

Power steering

ATF Dexron®

Lubricant additives

Volkswagen does not recommend the use of oil additives. It may adversely affect your warranty.

ENGINE OIL

Engine oil consumption

It is normal for your engine to consume oil. The rate of oil consumption depends on the quality and viscosity of oil, the speed at which the engine is operated, the climate, road conditions as well as the amount of dilution and oxidation of the lubricant.

Because of these variables, no standard rate of oil consumption can be established, but drivers should expect an increased oil consumption at high speeds and when the engine is new.

■ The engine in your vehicle depends on oil to lubricate and cool all of its moving parts. Therefore the engine oil should be checked regularly and kept at the required level.

■ Make it a habit to have the engine oil level checked with every fuel filling.

■ Lack of sufficient engine oil may lead to severe engine damage.

■ The oil pressure warning light is not an oil level indicator.

Always read WARNINGS on page 6.

Checking the engine oil level

The best time to check the engine oil level is when the oil is warm.

The engine oil dipstick and the oil filler neck are located behind the license plate lid.

Air-cooled engine:

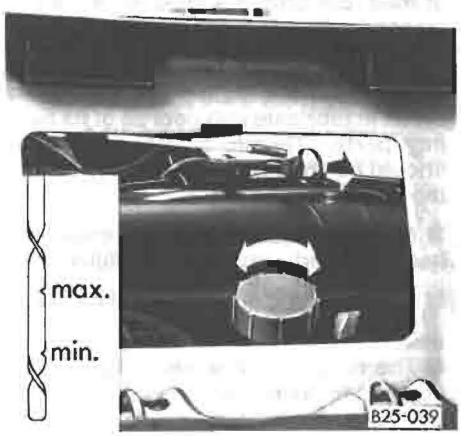

Diesel engine:



Water-cooled engine:

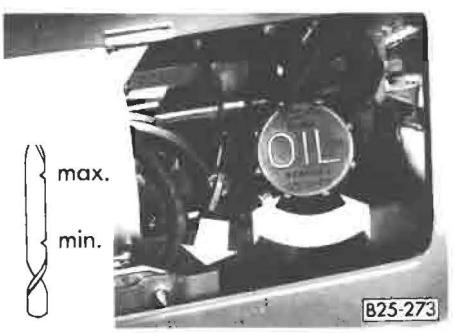

- Turn off the engine.
- To get a true reading, the vehicle should be on level ground. After turning off the engine, wait a few minutes for the oil to return to the crankcase.
- Flip license plate down.
- Pull out dipstick and wipe it clean with a rag.
- Reinsert dipstick; push it in all the way.
- Pull dipstick out again. The oil level is correct if it is between the "max" and "min" marks on the dipstick.
- If oil level is below "min" mark, or not showing on dipstick, add oil immediately.
- Make sure that the dipstick is completely in.

Adding engine oil

- Unscrew cap from oil filler neck.
- Pull extension tube out of filler neck as far as it will go.
- Only add the amount of oil needed. The difference between the "min" and "max" marks on the dipstick is about 1 U.S. quart or 1 liter. Always select a quality oil with the correct specification. See "Lubricants" on page 7.

Do not exceed the MAX marking.

Otherwise, the excess oil may be drawn in through the crankcase breather into the exhaust system. The oil would then burn in the catalytic converter and cause damage.

- Push in the extension tube, replace filler cap and hand tighten securely.

WARNING

The oil filler cap must be secure to avoid oil spill causing fire hazard.

Changing the engine oil

Have your engine oil changed regularly, but at least twice a year (see Maintenance booklet).

This is very important because the lubricating properties of oil diminish gradually during normal operation of the vehicle.

If you drive mostly short distances, or if you operate the vehicle in dusty areas, or under predominantly stop-and-go traffic conditions, or when temperatures remain below freezing for extended periods, the engine oil should be changed more frequently.

Due to the detergent additives in the oil, the fresh oil will look dark after the engine has been running for a short time. This is normal and there is no reason to change the oil more often than recommended by the manufacturer.

WARNING

- **Drain the oil into a container that is designed for this purpose, one that is large enough to hold at least the oil filling of your engine.**
- **Wear eye protection.**
- **To reduce the risk of burns from hot engine oil let the engine cool down to the touch.**
- **When removing the oil drain plug with your fingers, keep as far away as possible. Always keep your forearm parallel to the ground to help prevent hot oil from running down your arm.**
- **Engine oil is poisonous. Keep it well out of the reach of children. Continuous contact with used engine oil is harmful to your skin. Always protect your skin by washing thoroughly with soap and water.**

- **Always dispose of used engine oil properly. Do not dump it on garden soil, wooded areas, into open streams or down sewage drains.**
- **Recycle used engine oil by taking it to a used engine oil collection facility in your area, or contact a service station.**
- Turn off the engine.
- Remove the oil drain plug (arrow) when the engine is still warm and allow the oil to drain.
- **Always use a new gasket when reinstalling the plug. Do not overtighten.**
- Fill the engine with oil. **Do not overfill.** Always check engine oil level with dipstick as described on previous page.

Always heed WARNINGS on page 6.

ENGINE OIL FILTER

Air-cooled engine:

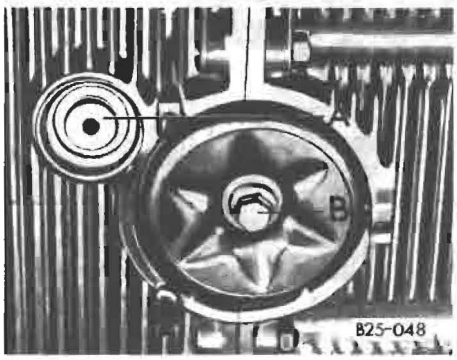

Remove the drain plug **A** first. After the oil is drained, take out the oil strainer by removing the center nut **B** and clean it. Use new washers and gaskets.

Important
The center nut B for the oil strainer should be tightened with a torque wrench. The correct torque is 7-9 ft lb (1.0-1.3 mkg).

Diesel engine:



Water-cooled engine:

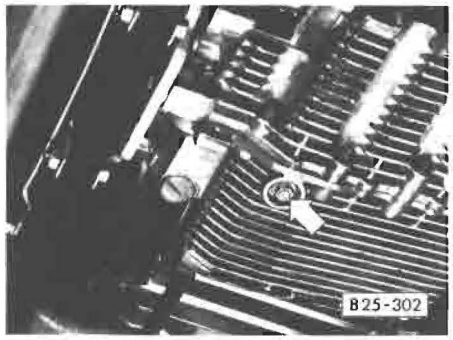

Changing the oil filter

The oil filter should be changed at the intervals listed in your Maintenance booklet.

- Remove old oil filter element and discard.
- Lightly coat seal of new filter element with oil.
- Screw on filter element and hand-tighten according to manufacturer's instructions on the carton or on the filter element.
- Fill engine with appropriate amount of engine oil.
- Run engine at various speeds for three to five minutes and check for leaks.
- Check dipstick for correct oil level, top up if necessary.

Air-cooled engine:

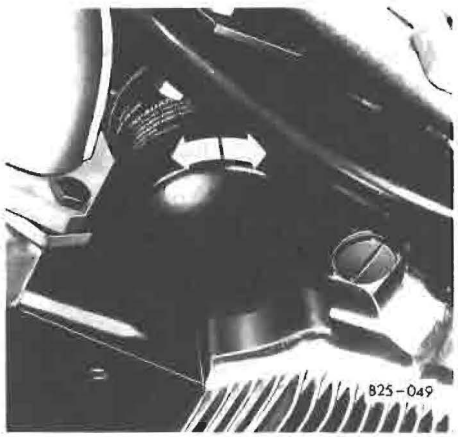

Diesel engine:

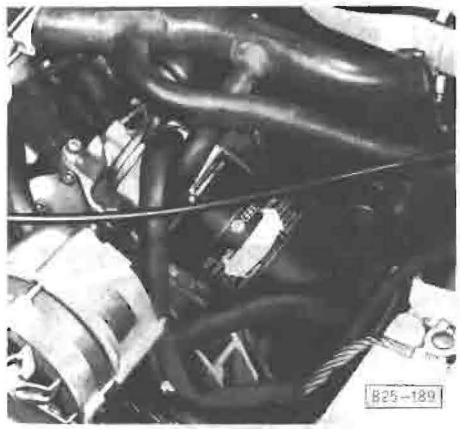

Water-cooled engine:

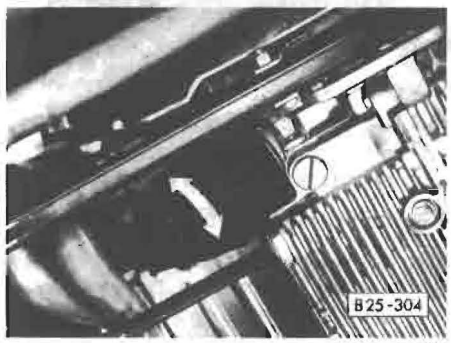

Always heed WARNINGS on page 6.

FUEL FILTER

Fuel filter replacements should be performed by your VW dealer or a qualified mechanic.

On Diesel engine equipped vehicles, accumulated water should be drained regularly.

Fuel filter replacement and water drainage intervals are specified in your Warranty & Maintenance booklet.

Should it become necessary to drain the fuel filter of water between scheduled maintenance intervals, proceed as follows.

To drain water from Diesel fuel filter

WARNING

■ Turn the engine off and let it cool down. Hot components can burn skin on contact and ignite fuel.

■ Do not smoke or have anything in the area that can ignite fuel.

■ Handle fuel only in well ventilated areas.

■ Disconnect ground strap from battery to prevent sparking.



■ Open vent screw at top of fuel filter.

■ Loosen drain plug underneath filter and, using a container, drain about half a cup or until drained fuel is pure.

■ Tighten drain plug and vent screw.

■ Do not let Diesel fuel spill on rubber hoses. Such connecting hoses may develop leaks and cause serious engine damage.

■ Do not dump Diesel fuel from the old canister on the ground, into open streams or down sewage drains. Should the discarding of Diesel fuel present a problem, we suggest you have filter changes performed by your VW dealer or at a service station.

AIR CLEANER

A dirty filter element reduces engine output and increases fuel consumption and can cause premature engine wear.

Normally, it is not required to service the air cleaner more often than recommended in the Maintenance booklet. If the vehicle is driven on very dusty roads, the air cleaner must be serviced more frequently, even daily. We recommend that you have the air cleaner serviced by your Volkswagen dealer or a qualified workshop.

If your air filter must be changed more frequently, we recommend that you have your Volkswagen dealer show you the procedure before you attempt doing it yourself.

The paper filter element must never be cleaned or soaked with gasoline, cleaning solvents or oil.

POWER STEERING*



The fluid reservoir is located behind the licence plate lid.

The power steering is filled with ATF Dexron®.

A correct fluid level in the reservoir is important for the proper functioning of power steering.

With the engine running, the fluid level in the power steering system must be checked at regular intervals. The fluid level should always be between the "max" and "min" markings. If the level should go below the "min" marking, have the power steering system inspected by your Volkswagen dealer. It is not sufficient to just add hydraulic fluid.

WARNING

■ Be sure not to confuse brake fluid and hydraulic fluid. If the wrong fluid is used, the systems may fail.

■ If the power steering system should fail, or if the engine is not running (for example while being towed), you will still be able to steer the vehicle, however, more effort will be required.

Note

Since the hydraulic fluid also functions as a lubricant, serious damage to the pump and to other components of the system could result if there is insufficient hydraulic fluid in the system.

Always heed WARNINGS on page 6.

*where applicable

COOLING SYSTEM

The cooling system is sealed and generally requires little attention.

The cooling system has been filled at the factory with a permanent coolant which does not need to be changed. The coolant consists of a mixture of water and the manufacturer's coolant additive G 11 – antifreeze on glycol basis with anticorrosion additives (40% for USA models; 50% for Canadian models). This mixture assures the necessary frost protection and protects the entire cooling system against corrosion and scaling, and raises the boiling point of the coolant.

Do not reduce the concentration of the coolant in the summer by adding plain water. **The coolant additive proportion must be at least 40% but not more than 60%,** to maintain the antifreeze protection and the cooling efficiency.

For year round driving, antifreeze is added at the factory for temperatures down to:

−13° F/−25° C (USA)
−40° F/−40° C (Canada)

Only use quality phosphate-free antifreeze containing ethylene glycol. Such antifreeze is available at your Volkswagen dealer.

WARNING

Antifreeze is poisonous. Always store antifreeze in its original container and well out of the reach of children. If you drain the coolant, it must be caught and safely stored. Drained coolant should normally not be reused. Always dispose of used coolant observing all environmental regulations.

Coolant losses

Coolant losses may indicate a leak in the cooling system. In this case, the cooling system should be inspected immediately by your Volkswagen dealer. It is not sufficient merely to add coolant.

In a sealed system, losses can only occur if the boiling point of the coolant is exceeded as a result of overheating.

Overheating can occur if:

- the flow of air to the radiator is obstructed by leaves, dust, insects or by additional lights installed in front of the radiator grille;
- the boiling point of the coolant has been reduced due to an incorrect mixture of coolant and water;
- the radiator fan is not working – see "Radiator fan", or;
- the vehicle is being driven up a long hill in a low gear with engine speed very high and at very high ambient temperature – see "Radiator fan".

If the cause for the overheating cannot be determined and corrected, contact your Volkswagen dealer immediately, otherwise serious engine damage could result.

Checking the coolant level

The coolant level should be checked from time to time, and always before going on a longer trip.

WARNING

To reduce the risk of being burned, never open the hood if you see or hear steam or coolant escaping from the engine compartment. Wait until no steam or coolant can be seen or heard before carefully opening the hood.

The refill tank and the expansion tank are in the engine compartment.

On the refill and the expansion tank, the cap need not be taken off, since the tanks are transparent.

The coolant level is normally checked only in the refill tank (behind the license plate lid).

Always heed WARNINGS on page 6.

On the refill tank, the coolant level must be between the min. and max. marks when engine is cold and not running. When engine is warm, coolant level may be slightly above max. mark.

Diesel engine:



Water-cooled engine:

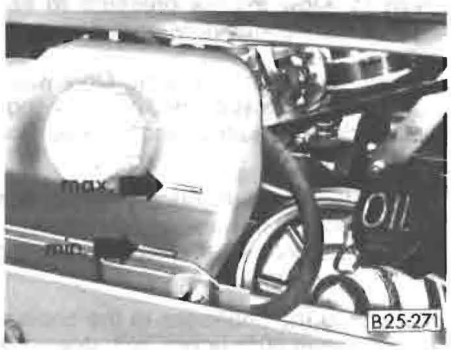

The expansion tank needs checking only if a large amount of coolant is lost or if the warning light in the water temperature gauge lights up.

Diesel engine:



Water-cooled engine:

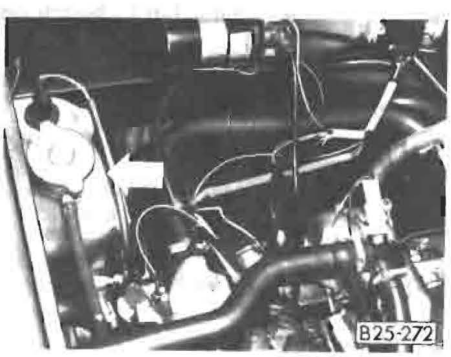

Adding coolant

Turn off the engine and allow it to cool down.

WARNING

Reduce the risk of scalding from hot coolant by following these steps.

■ If the cap from the expansion tank must be removed wait until the engine has cooled down. The cooling system is under pressure.

■ Protect face, hands and arms by covering the cap with a large, thick rag to protect against escaping fluid and steam.

■ Carefully and slowly turn cap one turn to allow excess pressure to escape before completely removing cap.

Top up coolant in refill tank. Only when cooling system was drained or a lot of coolant needs to be added, also fill expansion tank.

To maintain the anti-corrosion properties of the coolant, the antifreeze concentration should not be reduced, even during the warm season.

Increasing the antifreeze in the coolant to more than 60% is not only uneconomical, it is also detrimental to engine cooling.

Only use quality phosphate-free antifreeze containing ethylene glycol. Such antifreeze is available at your Volkswagen dealer.

Antifreeze, other than specified by Volkswagen, may cause corrosion of the cooling system, leading to engine overheating and damage.

Only for topping-up coolant, a small amount of antifreeze containing ethylene glycol and phosphates may be used, if recommended antifreeze is not available.

■ After adding coolant, run the engine at idle speed for a few seconds.

■ Wait for the radiator fan to switch on and off again.

■ Check coolant level. Add more coolant if necessary.

Do not overfill the system.

Excess coolant will be forced out through the pressure relief valve in the reservoir when the engine becomes hot.

Screw cap on again tightly.

Radiator fan

The electric radiator fan (located in front of the car behind grille) is controlled by thermoswitches from the coolant and engine compartment temperature.

After turning off the engine, the radiator fan can continue to run (up to 10 minutes). It may also suddenly start to run again even with the ignition switched off.

Notes

■ If the radiator fan does not come on when the coolant temperature is very high, check the fuse and replace it if necessary

■ The speed of the radiator fan does not depend on the engine speed, therefore cooling effect cannot be increased by downshifting. As long as the engine runs smoothly and driving an uphill road does not considerably reduce speed, there is no need to downshift.

V-BELT

Tension checking

Correct V-belt tension is important for overall vehicle performance.

Tensioning and replacing of vehicle V-belts should be performed by your Volkswagen dealer or a qualified workshop.

WARNING

To prevent personal injury stay well clear of the V-belt when the engine is running. Before checking V-belt tension turn the engine off and let it cool down. Hot components can burn skin on contact.

Always heed WARNINGS on page 6.

BRAKE FLUID



Brake fluid reservoir

The brake fluid reservoir is located under the instrument cluster in the dashboard panel.

To gain access to the reservoir, grasp the two recesses provided on back of the frame cover and pull up.

When replacing the cover, insert the front edge first, then press the cover down firmly. Make sure it is correctly seated.

Checking fluid level

The correct fluid level is important for the proper functioning of the brake system. The fluid level in the brake fluid reservoir should always be between the MAX and MIN markings. Your brake fluid level is automatically monitored by the brake warning light

The fluid level may drop slightly after some time due to the automatic adjustment of the brake pads. This is no cause for alarm.

If the brake fluid level falls considerably below the mark "MIN", the brake warning light will come on. Do not continue to operate the vehicle. The complete brake system should be thoroughly checked by your Volkswagen dealer and the cause corrected.

WARNING

■ Brake fluid is poisonous. Brake fluid is also harmful to the paint of your vehicle.

When adding or replacing brake fluid, make certain to avoid spilling. Brake fluid will damage fabric, paint, plastics and metal. Cover the areas sorrounding the reservoir before removing the filler cap.

■ If brake fluid must be added to the reservoir, use only new and unused DOT 4 brake fluid that meets SAE specification J 1703 and conforms to Federal Motor Vehicle Safety Standard 116.

■ Do not use any other brake fluid, or brake fluid that has absorbed moisture from the open air, or brake fluid that is dirty. It may cause premature wear or unreliable braking action.

■ Do not add or mix DOT 5 silicone type brake fluid with the brake fluid in your vehicle as severe component corrosion may result. Such corrosion could lead to brake system failure.

Changing brake fluid

Brake fluid absorbs moisture from the atmosphere. If the water content in the brake fluid is too high, corrosion in the brake system may result after a period of time. The boiling point of the brake fluid will also decrease considerably. If the brakes are under constant and extreme use, a vapor lock may result impairing the effectiveness of the brakes and the vehicle safety.

WARNING

The brake fluid must be replaced every 2 years. Your Volkswagen dealer will perform this service for you.

Always heed WARNINGS on page 6.

BATTERY

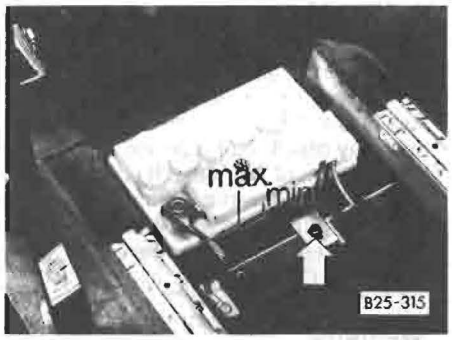

The battery is located under the front passenger seat. To check the battery, move the seat all the way forward.

On vehicles with swivel seats, turn the seat 180° (half circle) an then push forward.

Diesel:

The battery is in the engine compartment on the right.

Auxiliary battery*

The auxiliary battery is located under the left seat. Push the seat all the way forward to gain access to the battery.

The auxiliary battery supplies power when the vehicle is stationary. A special relay between the vehicle battery and the auxiliary battery prevents the vehicle battery from discharging. This way, you still have power to start your vehicle. While driving, both the vehicle battery and the auxiliary battery are charged.

Battery acid level

Under normal operating conditions, the battery in your Volkswagen is maintenance-free.

At high outside temperatures it is advisable, however, to check the fluid level at regular intervals through the transparent battery housing. The fluid level should always be between the "min" and "max" marks in each cell.

If the fluid level is below the "min" mark, let your Volkswagen dealer correct the condition.

WARNING

■ Always shield your eyes and avoid leaning over the battery whenever possible.

■ Do not let battery acid come in contact with skin, eyes, fabric, or painted surface.

■ If you get battery acid in your eyes or on your skin, immediately rinse with cold water for several minutes and call a doctor.

■ Do not expose the battery to an open flame or electric spark. Hydrogen gas generated by the battery can explode and cause personal injury.

Winter operation

During the winter months, battery capacity tends to decrease as temperatures drop. Additionally, more power is consumed while starting, and the headlights, heater, rear window defogger, etc., are used more frequently. Curtail unnecessary power consumption, particularly in city traffic or when travelling short distances only. Let your Volkswagen dealer test the battery's capacity before winter sets in. A well charged battery will not only prevent starting problems but will also live longer.

If your vehicle is left standing for several weeks at extremely low temperatures, the battery should be removed and stored where it will not freeze. This will prevent it from being damaged.

When removing the battery, first disconnect both cables (see Charging of Battery), then unscrew the battery mounting.

WARNING

Always keep the battery well out of the reach of children.

Charging of battery

WARNING

■ Always shield your eyes and avoid leaning over the battery whenever possible.

■ Charge battery in a well ventilated area. Keep away from open flame or electrical spark. Do not smoke. Hydrogen gas generated by the battery is explosive.

■ Battery acid that may spill during charging should be washed off with a solution of warm water and baking soda to neutralize the acid.

■ If you get battery acid in your eyes or on your skin, immediately rinse with cold water for several minutes and call a doctor.

■ Never charge a frozen battery. It may explode because of gas trapped in the ice. Allow a frozen battery to thaw out first.

■ Never use a fast charger as a booster to start the engine. This will seriously damage sensitive electronic components, such as relays, radio, etc., as well as the battery charger.

■ Fast charging a battery is dangerous and should only be attempted by a competent mechanic with the proper equipment.

*where applicable

Always heed WARNINGS on page 6.

Slow battery charging

WARNING

■ Heed all WARNINGS and follow instructions that come with your battery charger.

■ It is not necessary to remove the battery from the engine compartment, and it is also not necessary to disconnect the cables.

■ Make sure the electrolyte level in each cell is between the "min" and "max" marks. If the fluid level is below the "min" mark, let your Volkswagen dealer correct the condition.

■ Connect charger cables.

Charger cables must be connected POSITIVE (+) to POSITIVE (+) and NEGATIVE (−) to NEGATIVE (−).

Do not connect or disconnect charger cables while charger is operating to reduce the danger of exploding.

■ Switch on charger.

■ **Charging rate not over 6 Amp.** Normally, a battery should be charged at no more than 10 percent of its rated capacity.

For example, a charging current of 4.5 Amp. would be used on a battery having 45 Ah. Rated capacity of the battery in your vehicle is listed on the battery housing.

■ After charging, turn off charger and disconnect charger cables.

To remove battery from vehicle

■ Disconnect negative ground cable.

■ Disconnect positive cable.

■ Unscrew bolt of holding plate with open end wrench.

To reinstall battery in vehicle

■ Place battery in vehicle and tighten bolt of holding plate.

■ Reconnect positive cable.

■ Reconnect negative ground cable.

WARNING

Do not reverse polarity.

Cleaning terminals and connections

WARNING

■ Before work is done on the electrical system, disconnect the negative ground cable.

■ When working on the battery, be sure not to short circuit the terminals with tools or other metal objects. This would cause the battery to heat up very quickly, which could lead to damage or explosion and personal injury.

The terminals and connections should be kept clean and greased with silicone spray or petroleum jelly. Make sure the ground connection to the body is tight and free of corrosion.

With a disconnected battery the engine must not run because the electrical system will be damaged.

Replacing battery

A replacement battery must have the same specifications and dimensions as the original equipment battery. Specifications are listed on the battery housing. Make sure the replacement battery is installed correctly and securely. See "Removing and reinstalling battery".

Always heed WARNINGS on page 6.

WINDSHIELD / REAR WINDOW WASHER CONTAINER*

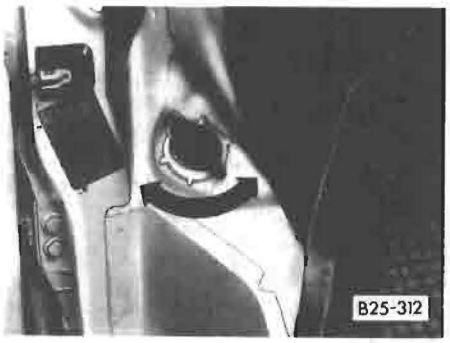

The filler cap is located at the left side of the driver's footwell.

Vehicles with rear window wiper and washer have an additional container on the right in the luggage compartment.

The capacities of the containers are:

Windshield washer container . . . . . 4.3 qt/4.2 liters

Rear window washer container . . . . . 1.1 qt/1.0 liters

Filling the containers

To fill the container, unsnap cover and unscrew the filler cap. After filling the container, screw the cap on tightly and close cover.



Since clear water is usually not adequate for cleaning the glass, add a cleaning solution to the water.

Use winterized washer solvent during the cold season. It helps to keep your windshield and rear window clean and prevents the fluid from freezing in the winter.

Do not use engine coolant antifreeze or any other solution that can damage the vehicle paint.

Follow the directions on the can for the correct amount to be used.

After filling the container press the cap onto the filler neck.



Adjusting washer jets

When vehicle is stationary, the water should hit the windshield as illustrated.

The washer jet for the rear window should be adjusted so that the fluid hits the glass in the center of the wiped area.

The jets can be adjusted with a needle.

The jets for the **headlight washer system*** can only be adjusted with a special tool. If necessary contact your Volkswagen dealer.

* where applicable

REPLACING WIPER BLADES

Wiper blades must be in good condition to provide clear vision.

Clean your wiper blades regularly with a windshield washer solution to prevent streaking. If the blades are very dirty, for example with insects, carefully clean the blades with a sponge or a soft brush.

Replace your wiper blades once or twice a year. See your Volkswagen dealer for replacement blades.

Notes

■ **Commercial hot waxes applied by automatic car washes have been known to affect the cleanability of the windshield.**

■ **To prevent damage to wiper blades, do not use gasoline, kerosene, paint thinner, or other solvents on or near the wiper blades.**

■ **To prevent damage to the wiper arms or other components, do not attempt to move the wipers manually.**

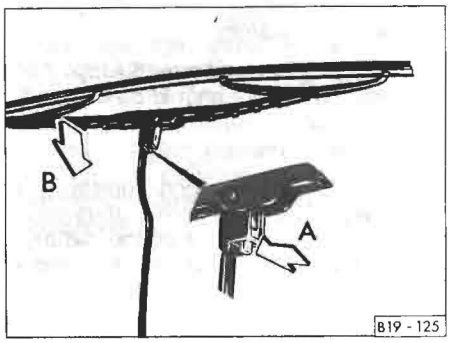

Removing wiper blades

■ Raise the wiper arm and hold wiper blade horizontally.

■ Depress locking spring (A) and remove blade by pulling it towards the glass (B).

Installing new wiper blades

■ The locking spring must click into place on the wiper arm.

TIRES/WHEELS

New tires

New tires do not possess maximum traction and should be driven at moderate speeds and with caution for the first 100 miles (160 kilometers).

Tire traction

WARNING

When driving on wet or slushy roads, a wedge of water may build up between the tires and the road. This phenomenon is known as aquaplaning or hydroplaning and may cause partial or complete loss of traction, vehicle control or stopping ability. Always reduce speed on wet roads.

Tire service life

The service life of your tires depends for the most part on the following factors:

Tire pressures

WARNING

■ Incorrect tire pressures cause increased tire wear and adversely affect road holding of the vehicle, leading to loss of control and personal injury.

■ Incorrect tire pressures can also lead to sudden deflation, resulting in an accident and personal injury.

Check your tire pressures twice a month, and especially before taking a long trip. Be sure not to forget to check the spare tire. Always check tire pressures when the tires are cold. When the tires are warm, the pressure will be higher. Do not reduce the pressure of warm tires.

Use an accurate tire pressure gauge when checking inflation pressures. Do not exceed the maximum tire inflation pressure listed on the tire sidewall. Cold tire inflation pressure means: when a vehicle has been standing for at least 3 hours or driven for less than 1 mile.

Always include the spare tire during a pressure check.

Driving habits

Fast cornering, heavy acceleration and hard braking all increase tire wear.

Wheel balancing

The front wheels on new vehicles are balanced. When driving, however, various conditions can cause a wheel to become unbalanced. This may be noticed as vibrations in the steering.

Since tire imbalance can cause wear on the steering, suspension and tires, you should have your wheels rebalanced. A wheel should always be balanced if a new tire has been mounted or a tire was repaired.



Tire wear

The original tires on your vehicle have built-in wear indicators. They are molded into the bottom of the tread grooves and will appear as approximately ½ inch (12mm) bands when the tire tread depth wears down to 1/16 inches (1.6 mm). Depending on the tire manufacturer, there are six to eight wear indicators evenly spaced around the circumference of the tire. Markings on the sides of the tires (e.g. the letters "TWI" or a triangle) show the locations of the wear indicators.

When the indicators appear in two or more adjacent grooves, it is time to replace the tires. We recommend, however, that you do not let the tires wear down to this extent. Worn tires cannot grip the road surface properly, and are even less effective on wet roads.

WARNING

■ Do not drive with worn tires or tires showing cuts, bruises or other damage because they may lead to sudden deflation causing loss of vehicle control and personal injury.

■ Since worn tires do not grip the road surface properly when driving on wet roads, the vehicle may tend to aquaplane sooner. We strongly urge you to replace your tires when the remaining tread depth is .12 inches (3 mm).

Incorrect wheel alignment

Incorrect wheel alignment causes excessive and uneven tire wear impairing the safety of the vehicle. If you notice excessive tire wear, contact your Volkswagen dealer.

Tire care

Inspect your tires at least every 2,000 miles (3,000 km) for wear and damage.

WARNING

■ Avoid damaging tires and wheel rims. If you must drive over a curb or other obstacle, drive slowly and at an angle. Frequently check tires for uneven wear and damage.

■ Remove imbedded material.

■ Replace worn or damaged tires immediately.

■ Replace missing valve dust caps.

■ Keep oil, fuel, brake fluid, etc. away from tires.

■ Keep tires inflated correctly.

■ Mark tires before removing them. Remount tires on the same vehicle side because the rotation direction should stay the same.

■ Store removed tires in a cool, dry and preferably dark place. Tires which are not on wheels should be stored standing up.

Tires age even if they are not being used. Tires which are older than 6 years should only be used cautiously in an emergency.

Wheels and tire replacement

Wheels and tires approved by the manufacturer have been specially matched to your vehicle and contribute largely to the road-holding and driving characteristics of the vehicle.

■ Fitting and repairing tires requires expert knowledge and special tools. This work should only be performed by a specialist.

■ For safety reasons, tires should be replaced in pairs and not individually. The tires with the deepest tread should always be mounted on the front wheels.

■ In the interest of maximum safety and best all-around vehicle handling, always buy replacement radial tires that have the same specifications with regard to tire size, design, load carrying capacity, tread pattern, tread depth etc. This also applies to Volkswagen recommended alternate replacement tires.

■ Never mount used tires if you are not sure of their previous history.

■ Whenever replacing a tubeless tire, always install a new valve stem. Tire repair should only be performed by a specialist.

WARNING

■ Never mix tires of different design such as steel belted radials with radial bias belted or bias ply tires etc. Mixing tire types will adversely affect road holding and can lead to loss of vehicle control and personal injury.

■ New tires do not possess maximum traction. They tend to be slippery. Break new tires in by driving cautiously at moderate speed for the first 100 miles (160 kilometers).

Applies additionally to the Syncro:

All four wheels on the vehicle must always have tires of the same size, construction and tread type so that the viscous coupling does not abnormally activate the front wheel drive. Different tires on the front or rear wheels exert additional stress on the drive train components, causing increased tire wear and impair vehicle control.

General notes

The original equipment tires and wheel rims on your vehicle comply with all applicable Federal Motor Vehicle Safety Standards.

If you wish to equip your vehicle with tires or wheels other than those installed at the factory, please note the following:

■ If you plan to install other than the original equipment tires and wheel rims, ask your Volkswagen dealer.

■ For technical reasons it is not possible in every case to use wheels from other vehicles – under certain conditions not even wheels from the same vehicle model.

■ Wheel rims and wheel bolts or lug nuts are matched to fit your Volkswagen.

■ When installing different wheels (for example, wheels with winter tires), the correct wheel bolts or lug nuts with the proper length and conical shape must be used. The secure fit of the wheels and the proper functioning of the brake system are dependent upon this.

■ Using tires and/or wheels which have not been approved by the manufacturer for your vehicle type can be detrimental to vehicle safety.

■ If wheel trim discs or a front spoiler are installed, make sure the air flow for cooling the brakes is not obstructed.

■ Before you plan on exchanging steel wheels, light alloy wheels, or snow tires already mounted on wheel rims, consult your Volkswagen dealer. He has the technical information necessary to advise you which wheel rims and wheel bolts or lug nuts are compatible with the original factory installations.

WARNING

■ The use of the wheel rims and wheel bolts or lug nuts that do not meet specifications of the original factory installed equipment will affect the safe operation of your vehicle and may cause an accident and personal injury.

Tire specifications

Tire specifications are imprinted on the sidewall of the tires. If in doubt, check with your Volkswagen dealer.

All passenger car and some light trucks tires must conform to Federal Safety Requirements in addition to these grades.

Treadwear

The treadwear grade is a comparative rating based on the wear rate of the tire when tested on a government test course. For example, a tire graded 150 would wear one and a half (1½) times as well as a tire graded 100. The relative performance of tires depends on actual conditions of use, however, and may depart significantly from the norm due to variations in driving habits, service practices and differences in road characteristics and climate.

Traction A, B, C

The traction grades, from highest to lowest, are A, B and C and represent the tire's ability to stop on wet pavement as measured on government test surfaces of asphalt and concrete. A tire marked C may have poor traction performance.

WARNING

The traction grade is based on braking (straightahead) traction tests and does not include cornering (turning) traction.

Temperature A, B, C

The temperature grades A (the highest), B and C, represent the tire's resistance to the generation of heat. Sustained high temperatures can reduce tire life, and lead to sudden tire failure. Grade C corresponds to a performance which all passenger car tires must meet under the Federal Motor Vehicle Safety Standard No. 109. Grades B and A represent higher levels than the minimum required by law.

WARNING

The temperature grade for this tire is established for a tire that is properly inflated and not overloaded. Excessive speed, underinflation, or excessive loading, either separately or in combination, can cause heat buildup, possible tire failure, loss of control and personal injury.

Snow tires

The tires for your vehicle were selected for optimal performance under normal driving conditions.

For winter driving, the roadability of your vehicle can be improved by installing all season tires or radial snow tires (M + S) with or without studs[1]).

That applies also to the Syncro

When installing snow tires, please note the following:

■ Only radial ply snow tires must be installed. Ask your Volkswagen dealer for the recommended tire size.

■ Snow tires should be mounted on all four wheels.

■ The tire pressures for snow tires are the same as for summer tires. However, do not exceed the maximum tire pressure listed on the sidewall.

■ Snow tires should have the same load capacity as original equipment tires and should be mounted on all four wheels.

■ Snow tires do not fulfill their purpose, if the tread depth is less than 5/32 in (4 mm).

WARNING

■ Tires with badly worn treads and studs are very dangerous. Make sure they are replaced immediately.

■ Never mix tires of different design such as steel belted radials with radial bias belted or bias ply tires etc. Mixing tire types will adversely affect road holding and can lead to loss of vehicle control and personal injury.

■ Snow tires with studs should be run at moderate speeds when new in order to give the studs time to settle.

Do not drive a vehicle equipped with snow tires at prolonged high speed. Snow tires do not have the same degree of traction on dry, wet or snowfree roads as a normal tire. Furthermore, snow tires wear rapidly under these conditions.

■ Where snow tires are compulsory on certain roads, this also applies to vehicles with all-wheel-drive.

Snow chains

Snow chains can be used on the rear wheels only.

Only use chains with fine pitch links protruding no more than ½ in/15 mm from tire tread and side walls, including tensioner. Wheels must rotate freely in all steering positions with chains mounted to prevent damage to body, axle or brake components. **Drive slowly and follow the chain manufacturer's instructions.**

Remove chains when roads are free of snow. Otherwise, they can be damaged and impair vehicle handling.

Syncro models only

Conventional snow chains may not be used with 205/70 × 14 tires on 5½ J × 14 wheels which are mounted on your vehicle. The use of conventional snow chains is only possible on smaller tires (e.g. 185 R 14C). Ask your VW dealer.

Where possible, snow chains should be fitted to all four wheels. If only two chains are available, these must be fitted to the rear wheels.

Cable type chains may also be fitted on all standard tires and wheels (including 205/70 × 14 tires on 5½ J × 14 wheels), however, they should only be used when road conditions require them. Always remove snow chains when road conditions improve. Be sure to follow all state and local regulations pertaining to the use of snow chains.

WARNING

To prevent personal injury, wear protective gloves when fitting cable chains on your wheels. Always follow the instructions of the manufacturer.

WINTER DRIVING

Remember the following points when driving in the winter:

■ Winter weather is particularly hard on the battery. We recommend having the battery checked, preferably by a Volkswagen dealer, before the cold weather starts

If the vehicle is left standing for several weeks at extremely low temperatures, the battery should be removed

■ Have the antifreeze concentration in the cooling system checked before the cold weather starts

■ The engine oil must have the correct viscosity grade for the outside temperatures to be expected

■ The best way to protect the bodywork is to wash and wax it frequently, especially in winter

■ Always use a windshield washer fluid with antifreeze for the windshield and rear window washer system in winter

■ Use a scraper to remove snow and ice from the windows

■ On winter roads the use of winter tires or all-weather tires will improve handling; this also applies to vehicles with all-wheel drive

■ When driving in the mountains in winter it is best to take along a set of snow chains. Snow chains may be compulsory for some mountain roads, and this restriction also applies to vehicles with all-wheel drive

[1]) Check with your local Motor Vehicle Bureau for possible restrictions.

JACK AND TOOLS

The jack and the tools necessary to change a wheel are in a bag stored under the driver's seat.

On vehicles with swivel seats they are stored under the rear seat bench.

The screwdriver has a reversible blade.

WARNING

■ Use the jack only for changing a wheel. Never use the jack to lift other vehicles or other loads as this may lead to accidents and personal injury.

■ The jack must never be used as a support to work underneath the vehicle. If the jack is accidentally dislodged, you could be seriously injured.

■ Do not raise the vehicle using a bumper jack. The bumper system would be damaged. Also, the jack may slip which could cause personal injury.

■ Do not support your car on cinder blocks, bricks or other props that may crumble under continuous load.

■ Do not start or run the engine while the vehicle is supported by the jack.

■ When working under the vehicle, always use safety stands specifically designed for this purpose.

SPARE WHEEL

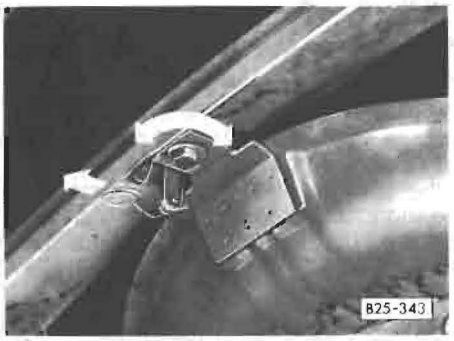

The spare wheel is located underneath the floor panel of the driver cab, where it rests on a hinged metal plate.

■ To take out the spare wheel, remove the bolt (curved arrow) from the holding bracket with wheel wrench.

WARNING

Keep hands and arms away from underbody of vehicle.

■ Stand in front of the vehicle and pull the catch hook (arrow) forward to let the metal plate drop.

■ Pull out the spare wheel.



■ When re-installing the spare wheel, slide spare wheel onto metal plate.

■ Give the plate a hard upward push and make sure the catch hook is securely engaged.

■ Replace bolt and tighten firmly.

WARNING

Never drive the vehicle without a firmly tightened bolt on the holding bracket. Should the catch hook disengage accidentally, you could lose control of the car.

Check the inflation pressure periodically to keep the tire ready for use.

WARNING

Under no circumstances should you store the spare wheel unsecured in the luggage compartment. This could cause serious personal injury to passengers in the vehicle in case of a collision.

CHANGING A WHEEL

WARNING

■ If you have a flat tire, move a safe distance off the road. Turn off the engine, the emergency flasher on and use other warning devices to alert other motorists.

■ Passengers must not remain in the vehicle when it is jacked up.

■ Make sure that passengers wait in a safe place away from the vehicle and well away from the roadway and traffic.

■ Before you change a wheel, be sure the ground is level and firm. If necessary, use a board under the jack.

■ Set the parking brake and block the wheel opposite the defective wheel on the other side of the vehicle. Engaging a gear or placing the Automatic transmission selector lever in P (Park) position is not a substitute for fully setting the parking brake.

Step 1

■ Take out the bag with jack and tools from under the driver's seat.

Step 2

■ With the wheels still firmly resting on the ground, remove the hub cap/wheel cover of the defective wheel.

Wheels with hub cap

■ The wheel cover can be pulled off with puller clip and lug wrench.



Wheels with wheel cover

■ Remove chrome plated hub cap with puller clip and lug wrench. Insert clip in holes at rim of a hub cap. Put wheel wrench through clip, brace one end of wrench on wheel rim and pull lightly on other end.

When you place the hub cap face down, you can use it as a tray for lug bolts (front wheels) or lug nuts (rear wheels).



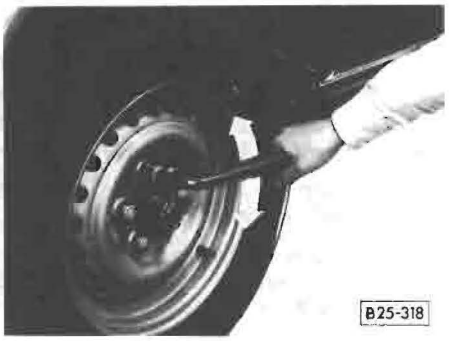

Step 3

■ Loosen wheel nuts or bolts counterclockwise about one turn with the lug wrench. **Do not yet remove the nuts or bolts.**

To loosen – turn counterclockwise

To tighten – turn clockwise

Step 4

There are two jack ports on each side under the car body for front and rear wheel changing – see right illustration.

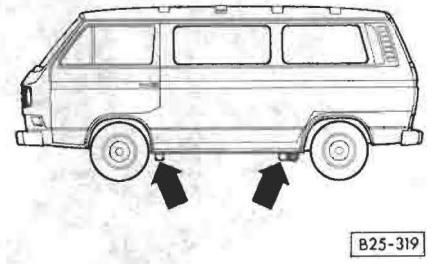

WARNING

■ Mounting the jack at any other place may damage the car or may result in personal injuries.

■ Provide a firm a base for the jack on the ground. If necessary, use a board.

■ Securely insert the jack into the jack port closest to the wheel to be changed.

■ Before inserting jack, clear jack port.

■ Place jack as straight as possible, as shown.

Step 5

Never jack the vehicle up by the bumper or body.

Do not raise the vehicle until you are sure the jack is securely engaged.

Passengers must not remain in the vehicle when jacked up.

■ Make sure that passengers wait in a safe place away from the vehicle and well away from the roadway and traffic.

■ **To raise** the vehicle, turn the handle clockwise.
Only raise the vehicle as much as is needed to change a wheel.

Step 6

WARNING

Before installing the spare wheel, accumulated road dirt must be removed from the inside and outside of the wheel nut/bolt holes to assure a secure mount on front hub or rear drum.

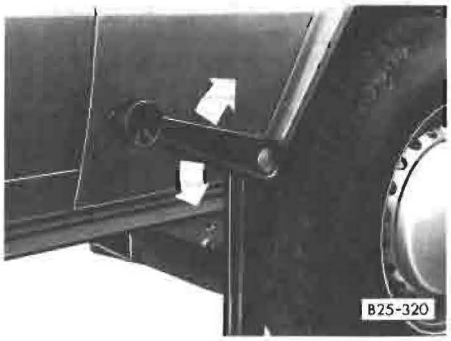

■ Fully unscrew wheel nuts or bolts and place them into the hub cap. Take the top nut or bolt off last. Place the spare wheel against the wheel hub and slightly rotate the wheel until a bolt hole in the wheel is in line with a threaded stud in the wheel hub. Reinstall nuts or bolts and tighten them crosswise by hand before jacking the car down.

Step 7

■ **To lower** the vehicle, turn the handle counterclockwise.

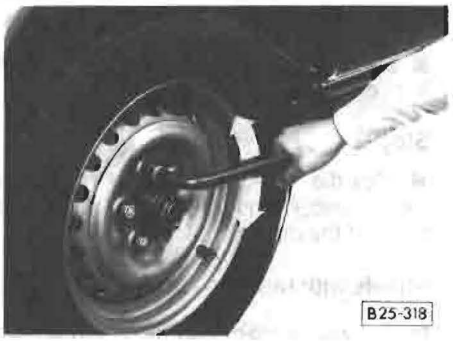

Step 8

■ Then go crosswise from one nut or bolt to another tightening them firmly with the lug wrench.

■ **Correct tightness of the wheel nuts is important.**

■ Correctly tightened nuts or bolts should have a torque of 130 ft lb/180 Nm. This torque can be obtained with the lug wrench by any person of average strength. If in doubt about the correct tightness of the wheel nuts, have them checked with a torque wrench by your dealer or at service station.

Step 9

■ To install the hub cap, place it around the lower part of the wheel center. With a firm blow of your hand on the upper part, the hub cap will snap into place. Make sure it is firmly seated.

Step 10

■ Fully lower the vehicle and remove jack.

■ Correct the air pressure of the tire you have just put on. For correct tire inflation pressures, see the sticker on the left doorjamb.

■ Store the jack and tools under the driver's seat.

■ Store damaged tire in spare wheel metal plate under front of vehicle.

■ Engage lock for metal plate and firmly secure plate with bolt.

■ Have flat tire repaired and replaced promptly.

FUSES

A failure in the electrical system may be caused by a burned fuse.

Fuses are arranged in one centralized unit. The unit is located on the left side under the dashboard behind a cover.

Removing cover:

Detach cover at front, swing downwards and take it off.

Installing cover:

Hang cover in the eyes of fuse box bracket, swing it upwards and press it firmly into position.

Replacing a fuse

Before replacing a fuse, turn off all lights and accessories and remove the ignition key to avoid damaging the electrical system.

■ Consult the appropriate electrical wiring diagram to find out which fuse belongs to the component that has failed.

■ Remove blown fuse with the plastic clip located on cover in front of fuse box.

Three spare fuses can be attached to the bottom of the fuse panel. It is good planning to keep a supply of spare fuses on hand. They are available at your Volkswagen dealer.

■ Replace the blown fuse which can be recognised by the burnt metal strip, with a fuse of equal ampere rating.

WARNING

Do not use a fuse of higher amperage, because this could damage the electrical part and fire can result.

If a fuse blows repeatedly, do not keep on replacing it. The cause of the short circuit or overload must be found. On no account should fuses be patched up with tin foil or wire as this may cause serious damage elsewhere in the electrical circuit or cause a fire.

REPLACING BULBS

Before starting to replace a bulb, switch off the respective circuit.

Do not touch the glass part of the new bulb with bare fingers. Finger prints left on the glass evaporate when the bulb gets hot, the vapor settles on the reflector surface and dims it.

Always use the same type of bulb. The designation is marked on the bulb.

Headlights

Should it become necessary to replace a headlight bulb, the air intake grille must be removed first.

- With a screwdriver loosen the five quick-release screws along upper edge of grille.
- Pull the grille slightly toward you.
- Then lift the grille out of its retainer.

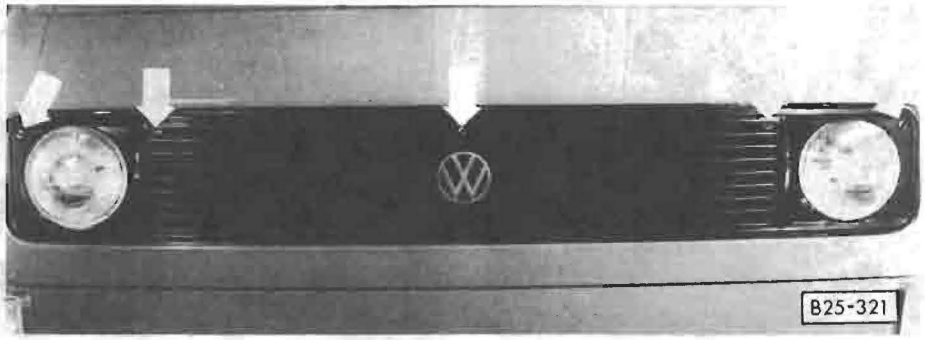

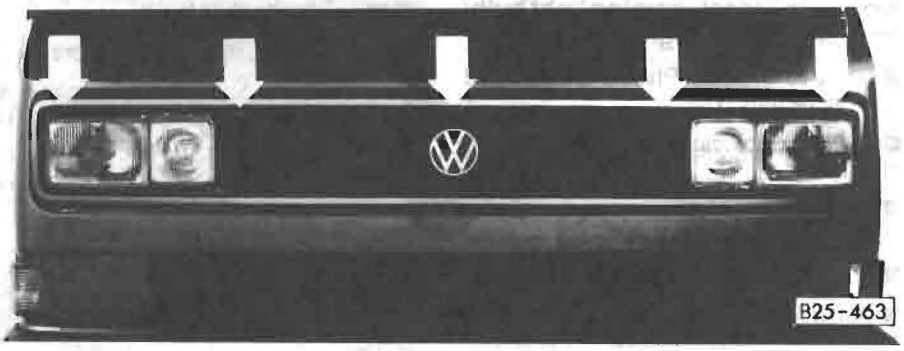

1980-1984:

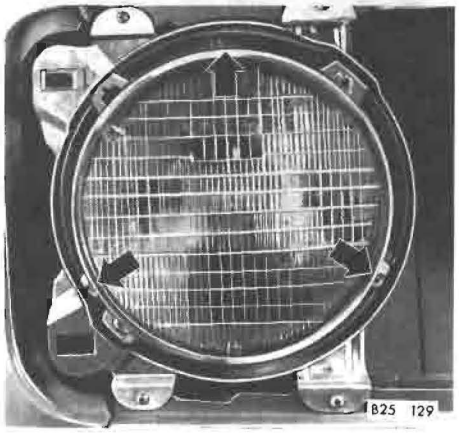

- Remove the three short screws in the sealed beam retaining ring and take the ring off.
- Do not alter the position of the long headlight adjustment screws.
- Take the sealed beam unit out of the support ring and pull the cable connector off.

When installing a new sealed beam unit, be sure the three lugs on the headlight engage properly in the support ring.

If no other headlight part as described here was removed or its position changed, it should not be necessary to aim the headlights. If in doubt have the adjustment checked by your dealer.

From 1985:

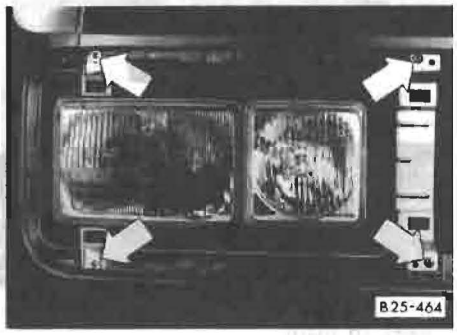

- Remove the four screws (arrows) and take the headlight out.

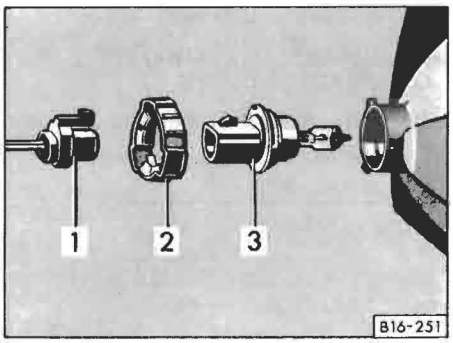

Outer headlights

- Disconnect wire connector (1)
- Twist lock ring (2) counterclockwise, pull bulb (3) out of headlight housing and discard.
- Install new bulb so that the locating lugs on the headlight housing engage the recesses on the bulb.
- Reinstall lock ring so that its recesses engage the locating lugs on the headlight housing.
- Twist lock ring clockwise until firmly seated.
- Reconnect wire connector. Have headlight beam alignment checked.

Auxiliary driving lamps

- Turn cap to left and take off.
- Pull wire connector off.
- Unhook spring clip holding bulb and swing it away.
- Take bulb out and insert new bulb so that the locating lug on bulb plate engages recess in reflector.
- Swing spring clip over bulb plate. Squeeze clip together and engage it in the retaining lugs.
- Attach wire again.
- Install cap and turn to right.
- Have headlight setting checked.



Front turn signal / parking light bulb/ front side marker light bulb

■ Remove the two Phillips screws and take off the lens cover.

■ Pull out bulb holder and push down the rubber boot.

■ Press spring clip inward and take out bulb holder.

■ Give bulb a left turn and remove.

■ Replace bulb and reverse the above procedure to install bulb holder and lens cover.

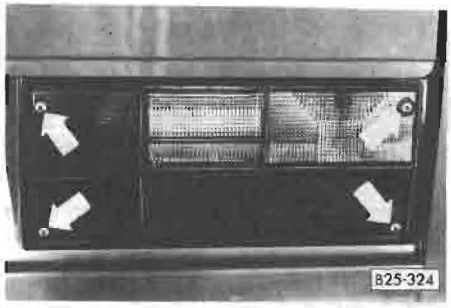

Rear turn signal, stop / tail / back-up light bulb

■ Remove the four Phillips screws and take off lens cover with bulb housing.

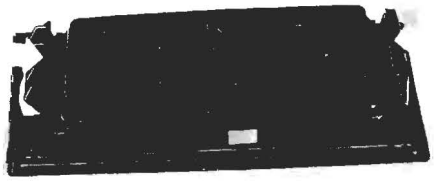

■ Squeeze the two side springs inward (arrow) and lift out the bulb housing.

■ Press defective bulb into bulb holder, turn left and take out bulb.

■ Replace bulb and reverse the above procedure to install bulb housing with lens cover.

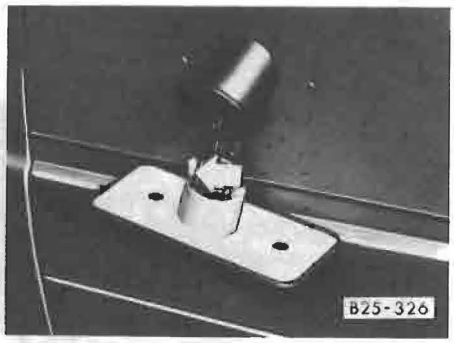

Rear side marker bulb

■ Remove the two Phillips screws and take off lens cover.

■ Pull out bulb holder and push down the rubber boot.

■ Press spring clip outward and take out bulb holder.

■ Give bulb a right turn and remove.

■ Replace bulb and reverse the above procedure to install bulb holder and lens cover.

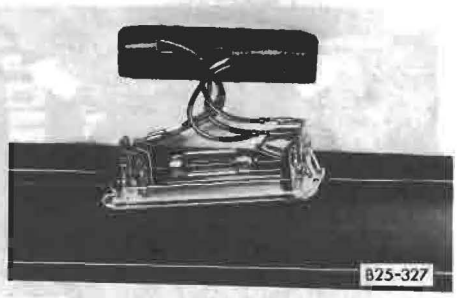

Interior light

■ To remove lamp, press against spring clip on left side and lift out the housing.

■ Take out bulb from between the two spring contacts and install new bulb.

■ Install lamp by inserting switch side of housing into cut-out first.

■ Then press in the other side until spring clip engages.

License plate light bulb

There is one bulb housing on each side of the license plate. Only if both bulbs are operative is the license plate properly illuminated.

■ Take the bulb housing off by pulling it down.

■ Remove the two Phillips screws and take off lens cover.

■ Press bulb into housing, turn left and take out.

■ Replace bulb and reverse above procedure to install bulb housing and lens cover.

Make sure the spring clip on each side of the housing is securely engaged in the cutouts provided at upper edge of cross panel.

HEADLIGHT ADJUSTMENT

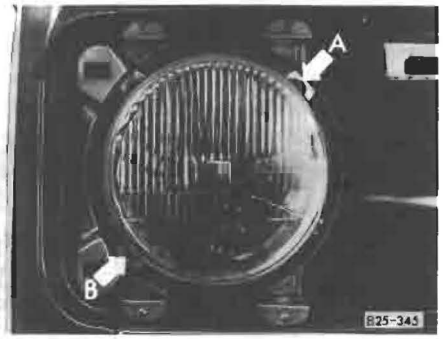

The proper headlight adjustment is very important for traffic safety. The headlight adjustment should therefore only be done with a special appliance.

Adjust the headlight using the Phillips screwdriver from the vehicle tools.

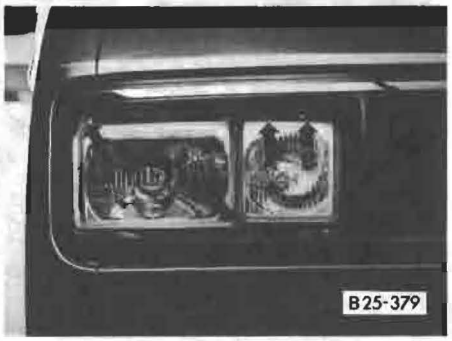

The illustration show the adjustment on the right headlights. On the left headlights the adjustment are symmetrically opposite.

A – lateral adjustment
B – hight adjustment

To reduce the beam range, turn the screwdriver clockwise.

EMERGENCY STARTING

Starting with jumper cables

WARNING

■ Always shield your eyes and avoid leaning over the battery whenever possible.

■ Do not allow battery acid to contact eyes or skin. Flush any contacted area with water immediately.

■ Improper use of booster battery to start a vehicle may cause an explosion.

■ Vehicles batteries generate explosive gases. Keep sparks, flame and lighted cigarettes away from batteries.

■ Do not charge a frozen battery; allow it to thaw out first. Gas trapped in the ice may cause an explosion.

■ Do not try to jump start any vehicle with a low electrolyte level in the battery.

■ The voltage of the booster battery must also have a 12-volt rating. The capacity (Ah) of the booster battery should not be lower than that of the discharged battery. Use of batteries of different voltage or substantially different Ah rating may cause an explosion and personal injury.

■ Applying a higher voltage booster battery will cause expensive damage to sensitive electronic components, such as relays, radio, etc...

■ Vehicle with discharged battery: turn off lights and accessories, move lever to **N** or **P** (Automatic transmission) or into Neutral (Manual transmission) and set parking brake.

Use of jumper cables

WARNING

■ To avoid serious personal injury and damage to the vehicle, heed all warnings and instructions of the jumper cable manufacturer. If in doubt, call for road service.

■ The jumper cables must be long enough so that the vehicles do not touch.

■ When connecting jumper cables, make sure that they cannot get caught in any moving parts in the engine compartment.

Improper hook-up of jumper cables can ruin the alternator.

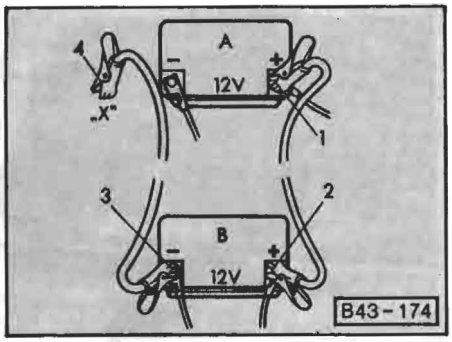

A – Discharged battery
B – Booster battery
X – To bolt securing ground strap to body

Always connect

POSITIVE (+) to POSITIVE (+), and NEGATIVE (–) to bolt securing ground strap to body.

1. Connect clamp of plus-cable to positive (+) terminal (1) of discharged battery.

2. Connect clamp on opposite end of cable to positive (+) terminal (2) of booster battery.

3. Connect clamp of minus-cable to negative (–) terminal (3) of booster battery.

4. Connect clamp on opposite end of cable to a bare metal part bolted directly to bolt securing ground strap to body (4) of vehicle with discharged battery. Connect clamp as far away from battery as possible.

5. Start the engine of the vehicle with the booster battery. Run the engine at a moderate speed.

6. Start engine with discharged battery in the usual manner. If engine fails to start, do not continue to crank but contact nearest workshop.

7. With engine running, remove jumper cables from both vehicles in exact reverse order: Steps 4 through 1.

Starting by pushing or towing

Vehicles with Automatic Transmission cannot be started by pushing or towing.

Vehicles with Manual Transmission must not be started by pushing or towing.

Damage to the catalytic converter and/or other parts of the vehicle may result.

Always heed WARNINGS on page 6.

VEHICLE IDENTIFICATION

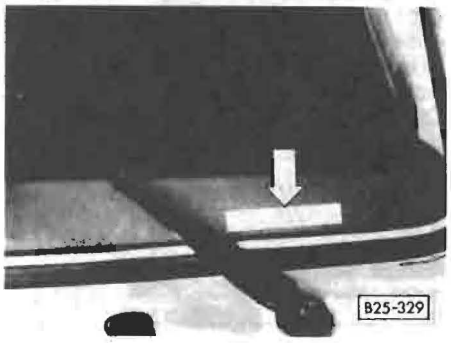

The Vehicle Identification Number (VIN)

is located on the instrument panel on the driver's side so that it is visible from the outside through the windshield.

The safety compliance sticker

is your assurance that your new vehicle complies with all applicable Federal Motor Vehicle Safety Standards which were in effect at the time the vehicle was manufactured. You can find this sticker on the left doorjamb. It shows the month and year of complete and incomplete (campmobile only) production and the vehicle identification number of your vehicle (perforation) as well as the Gross Vehicle Weight Rating and the Gross Axle Weight Rating.

The Vehicle Identification Label

is located on the left side under the dashboard. The label contains the following information:

1980-1985:

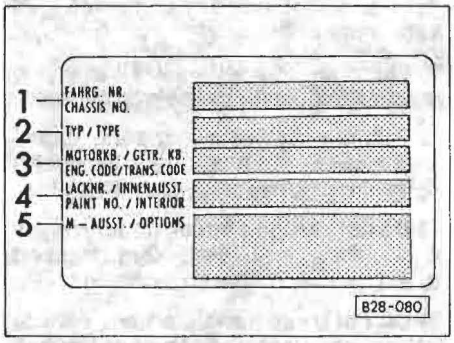

1 Vehicle Identification Number
2 Vehicle Code
3 Engine and Transmission Code
4 Paint and Interior Code
5 Option Codes

From 1986:

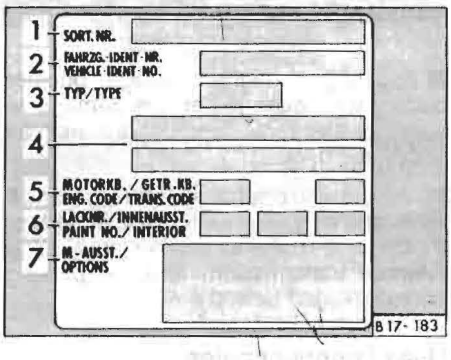

1. Production control no.
2. Vehicle identification no.
3. Type code number
4. Type designation
5. Engine and transmission code letter
6. Paint no./Interior
7. Optional equipment nos.

The Engine Number

Air-cooled:



The engine number (arrow) is located on the right side of the engine compartment directly in front of the fan housing.

Diesel:

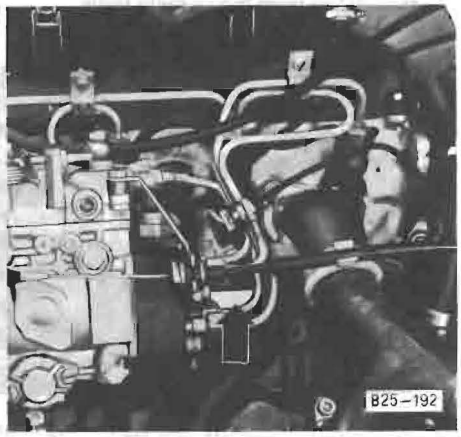

The engine number (arrow) is located on the engine block next to the injection pump.

Water-cooled:



The engine number (arrow) is located on the right side of the engine block.

TECHNICAL DATA

ENGINE

Air-cooled
- Four-cylinder, horizontally opposed with four crankshaft main bearings
- Air cooling with thermostatically-controlled cooling fan
- Self-adjusting hydraulic valve lifters (no adjustment)
- AFC (air-flow controlled) electronic fuel injection
- Breaker-point ignition with combined vacuum and centrifugal advance and speed limiter
- Breakerless electronic ignition on California models

Diesel
- Four-stroke, four-cylinder diesel
- Five main-bearing crankshaft and spur-belt driven overhead camshaft
- Liquid cooling (thermostatically-controlled) with thermostatically-controlled electric radiator cooling fan
- Mechanical fuel-injection pump

Water-cooled
- Four-cylinder, horizontally opposed with four crankshaft main bearings
- Liquid cooling (thermostatically-controlled) with thermostatically-controlled electric radiator cooling fan
- Digijet/Digifant air-flow controlled electronic fuel injection
- Breakerless electronic ignition

	Air-cooled	Diesel	Water-cooled up to 1986 (Digijet)	Water-cooled from 1986 (Digifant)
Maximum output, SAE net:	67 hp @ 4200 rpm	48 hp @ 4200 rpm	82 hp @ 4800 rpm	90 hp @ 4800 rpm*
Maximum torque, SAE net:	101 ft-lb @ 3000 rpm	97 ft-lb @ 2000 rpm	105 ft-lb @ 2600 rpm	117.3 ft-lb @ 3200 rpm
Displacement:	120 cu. in. (1970 cc)	97 cu. in. (1588 cc)	117 cu. in. (1913 cc)	129 cu. in. (2109 cc)
Stroke:	2.80 in. (71 mm)	3.40 in. (86.4 mm)	2.70 in. (68.9 mm)	2.99 in. (76.0 mm)
Bore:	3.70 in. (94 mm)	3.01 in. (76.5 mm)	3.70 in. (94.0 mm)	3.70 in. (94.0 mm)
Compression ratio:	7.3:1	23:1	7.3:1	9.0:1
Firing order:	1-4-3-2	--	1-4-3-2	1-4-3-2

*1987-1988: 90 hp @ 5500 rpm

Capacities	
Fuel tank	
(total with reserve)	16 gal. (60 liters)
Syncro:	18.5 gal. (70 liters)
Reserve:	2.5 gal. (10 liters)
Engine oil (with filter change)	
Air-cooled:	3.7 US qt. (3.5 liters)
Diesel:	4.2 US qt. (4.0 liters)
Water-cooled:	4.8 US qt. (4.5 liters)
(without filter change)	
Air-cooled:	3.2 US qt. (3.0 liters)
Diesel:	3.7 US qt. (3.5 liters)
Water-cooled:	4.2 US qt. (4.0 liters)
Automatic transmission fluid (ATF) refill:	3.2 US qt. (3.0 liters)
Cooling System	
Diesel:	16.9 US qt. (16 liters)
Water-cooled:	18.6 US qt. (17.5 liters)
Windshield washer reservoir:	4.3 US qt. (4.2 liters)
Rear window washer reservoir:	1.1 US qt. (1.0 liters)

Cylinder Location (Air-cooled and Water-cooled)

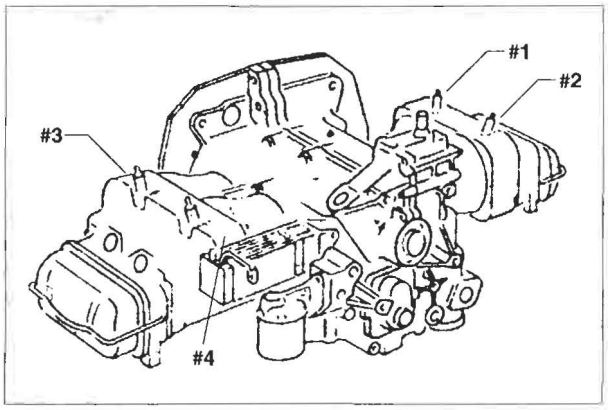

Lubrication, Emissions and Vehicle Maintenance Schedules
Air-cooled, Water-cooled and Diesel models: 1982-1985

first 1,000 miles (1,600 km):	
Engine:	change oil (air-cooled) check oil level, add if necessary check for leaks
Engine (diesel only):	retorque cylinder head bolts adjust valve clearance replace cover gasket
Brakes:	check for damage and brake fluid leaks
Cooling system:	check tightness of hoses and clamps, check coolant level, add if necessary
Exhaust system:	check for damage
Fuel system:	check visually for leaks
V-belt:	check tension, adjust if necessary (diesel)
During Road Test:	Check efficiency of braking, steering, heating and ventilation system, automatic transmission kickdown (where applicable)
After Road Test: Engine: Engine idle speed: Engine idle mixture (CO): Exhaust system:	 check for leaks check check (1984-1985 models) check for exhaust leaks

every 7,500 miles (12,000 km):	
Engine:	change oil replace oil filter check for leaks
Brakes:	check for damage and brake fluid leaks check brake pad thickness
Cooling system:	check coolant level, add if necessary
Fuel filter:	drain water (diesel only)

every 15,000 miles (24,000 km):	
Engine:	change oil replace oil filter check for leaks
Engine (diesel only):	adjust valve clearance replace cover gasket clean valve cover breather screen
Fuel filter:	replace (except diesel)
Ignition distributor:	replace breaker points, adjust dwell and timing (air-cooled except California)

Lubrication, Emissions and Vehicle Maintenance Schedules
Air-cooled, Water-cooled and Diesel models: 1982-1985

every 15,000 milese (24,000 km): ***(cont'd)***	
Spark plugs:	replace (air-cooled)
Automatic transmission final drive:	check for leaks check gear oil level, add if necessary
Battery:	check electrolyte level, add distilled water if necessary
Brakes:	check for damage and brake fluid leaks check brake fluid level, add if necessary
Brake linings and pads:	check thickness
Brake pressure regulator:	check (where applicable)
Cooling system:	check tightness of hoses and clamps, check coolant level, add if necessary
Crankcase ventilation system:	inspect hoses and connections (1982-1983 models)
Door check rods:	lubricate
Drive shafts:	check protective boots for damage
EGR system:	inspect, reset EGR mileage counter (air-cooled except California)
Exhaust system:	check for damage
Front axle:	check dust seals on ball joints and tie rod ends check tie rods for wear and damage
Fuel filter:	drain water (diesel only)
Fuel system:	check visually for leaks
Headlights:	check alignment and adjust if necessary
Ignition:	check vacuum hoses, ignition wires, distributor cap and rotor, replace if necessary
Manual transmission:	check gear oil level, add if necessary
Sliding door:	lubricate mounting points, guide tracks and roller guides
Steering:	check protective boots for damage
V-belt(s):	check tension and condition, adjust/replace if necessary
Wheels and tires:	check for wear and damage
During Road Test:	Check efficiency of braking, steering, heating and ventilation system, automatic transmission kickdown (where applicable)
After Road Test: Automatic transmission: Engine: Engine idle speed: Engine idle mixture (CO): Exhaust system: Power steering:	 check automatic transmission fluid (ATF) level check for leaks check check (1984-1985 models) check for exhaust leaks check fluid level, add if necessary

continued

Lubrication, Emissions and Vehicle Maintenance Schedules
Air-cooled, Water-cooled and Diesel models: 1982-1985

every 30,000 miles (48,000 km):	
Air cleaner:	replace filter element
Automatic transmission:	change automatic transmission fluid (ATF) clean pan and strainer, replace pan gasket
Brake fluid:	replace every two years regardless of mileage
Engine:	change oil replace oil filter check for leaks compression test (except diesel)
Engine (air-cooled only):	clean oil strainer
Engine (diesel only):	adjust valve clearance replace cover gasket clean valve cover breather screen
Fuel filter(s):	replace
Ignition distributor:	replace breaker points, adjust dwell and timing (air-cooled except California)
Oxygen sensor (air-cooled):	replace, reset OXS mileage counter (California only)
Oxygen sensor (water-cooled):	replace every 30,000 miles regardless of time since delivery (1984 models, 1985 models except California)
Spark plugs:	replace
V-belt:	replace (diesel)
Valve cover gaskets:	replace (air-cooled)
Automatic transmission final drive:	check for leaks check gear oil level, add if necessary
Battery:	check electrolyte level, add distilled water if necessary
Brakes:	check for damage and brake fluid leaks
Brake linings and pads:	check thickness
Brake pressure regulator:	check (where applicable)
Brake warning light switch:	check function
Cooling system:	check tightness of hoses and clamps, check coolant level, add if necessary
Crankcase ventilation system:	inspect hoses and connections (1982-1983 models)
Door check rods:	lubricate
Drive shafts:	check protective boots for damage
EGR system:	inspect, reset EGR mileage counter (air-cooled except California)
Exhaust system:	check for damage

every 30,000 miles (48,000 km): ***(cont'd)***	
Front axle:	check dust seals on ball joints and tie rod ends check tie rods for wear and damage
Fuel system:	check visually for leaks
Headlights:	check alignment and adjust if necessary
Ignition:	check vacuum hoses, ignition wires, distributor cap and rotor, replace if necessary
Manual transmission:	check gear oil level, add if necessary
Sliding door:	lubricate mounting points, guide tracks and roller guides
Steering:	check protective boots for damage check play
V-belt(s):	check tension and condition, adjust/replace if necessary
Wheels and tires:	check for wear and damage
During Road Test:	Check efficiency of braking, steering, heating and ventilation system, automatic transmission kickdown (where applicable)
After Road Test: Automatic transmission: Brakes: Engine: Engine idle speed: Engine idle mixture (CO): Exhaust system:	 check automatic transmission fluid (ATF) level, add if necessary check brake fluid level, add if necessary check for leaks check check (1984-1985 models) check for exhaust leaks

every 60,000 miles (96,000 km): ***all items listed for 30,000 mile (48,000 km) interval, plus:***	
Oxygen sensor:	replace every 60,000 miles (96,000 km) regardless of time after delivery

Lubrication, Emissions and Vehicle Maintenance Schedules
Water-cooled models from 1986

every 7,500 miles (12,000 km):	
Engine:	change oil replace oil filter
Brakes:	check brake pad thickness

every 15,000 miles (24,000 km):	
Engine:	change oil replace oil filter
Automatic transmission final drive:	check for leaks check gear oil level, add if necessary
Brakes:	check for damage and brake fluid leaks check brake fluid level, add if necessary
Brake linings and pads:	check thickness
Cooling system:	check coolant level, add if necessary
Drive shafts:	check protective boots for damage
Exhaust system:	check for damage
Manual transmission:	check gear oil level, add if necessary
Sliding door:	lubricate mounting points, guide tracks and roller guides
During Road Test:	Check efficiency of braking, steering, automatic transmission kickdown (where applicable), heating, ventilation and air conditioning, power accessories and electrical systems
After Road Test: Automatic transmission: Engine: Engine idle speed: Exhaust system: Power steering:	 check automatic transmission fluid (ATF) level check for leaks check check for exhaust leaks check fluid level, add if necessary

every 30,000 miles (48,000 km):	
Air cleaner:	replace filter element
Automatic transmission:	change automatic transmission fluid (ATF), clean pan and strainer, replace pan gasket*
Brake fluid:	replace every two years regardless of mileage
Engine:	change oil replace oil filter check for oil leaks compression test
	* Specified in the case of severe conditions such as extremely high temperatures, continuous mountain driving, trailer towing, and predominantly stop-and-go traffic

from 1986

every 30,000 miles (48,000 km): ***(cont'd)***	
Spark plugs:	replace
Automatic transmission final drive:	check for leaks check gear oil level, add if necessary
Brakes:	check for damage and brake fluid leaks
Brake linings and pads:	check thickness
Cooling system:	check coolant level, add if necessary
Drive shafts:	check protective boots for damage
Exhaust system:	check for damage
Front axle:	check dust seals on ball joints and tie rod ends check tie rods for wear and damage
Manual transmission:	check gear oil level, add if necessary
Sliding door:	lubricate mounting points, guide tracks and roller guides
V-belt(s):	check tension and condition, adjust/replace if necessary
During Road Test:	Check efficiency of braking, steering, automatic transmission kickdown (where applicable), heating, ventilation and air conditioning, power accessories and electrical systems
After Road Test: Automatic transmission: Engine: Engine idle speed: Exhaust system: Power steering:	 check automatic transmission fluid (ATF) level, add if necessary check for leaks check check for exhaust leaks check fluid level, add if necessary

every 60,000 miles (96,000 km): ***all items listed for 30,000 mile (48,000 km) interval, plus:***	
Oxygen sensor:	replace every 60,000 miles (96,000 km) regardless of time after delivery (1986-1987 models only)

every 90,000 miles (144,000 km): ***all items listed for 30,000 mile (48,000 km) interval, plus:***	
Oxygen sensor:	replace every 90,000 miles (144,000 km) regardless of time after delivery (models from 1988)